US007762727B2

(12) **United States Patent**
Aronson

(10) **Patent No.: US 7,762,727 B2**
(45) **Date of Patent: Jul. 27, 2010**

(54) **ACTIVE OPTICAL CABLE WITH INTEGRATED CONTROL FEATURES**

(75) Inventor: **Lewis B. Aronson**, Los Altos, CA (US)

(73) Assignee: **Finisar Corporation**, Sunnyvale, CA (US)

(*) Notice: Subject to any disclaimer, the term of this patent is extended or adjusted under 35 U.S.C. 154(b) by 0 days.

(21) Appl. No.: **12/262,872**

(22) Filed: **Oct. 31, 2008**

(65) **Prior Publication Data**

US 2009/0060425 A1 Mar. 5, 2009

Related U.S. Application Data

(63) Continuation of application No. 11/401,803, filed on Apr. 10, 2006, now Pat. No. 7,445,389.

(51) **Int. Cl.**
G02B 6/36 (2006.01)

(52) **U.S. Cl.** **385/89**; 385/88; 385/101

(58) **Field of Classification Search** 385/75, 385/88, 89, 53, 100–102
See application file for complete search history.

(56) **References Cited**

U.S. PATENT DOCUMENTS

7,371,014 B2 5/2008 Willis et al.
7,496,161 B2 * 2/2009 Chou et al. 375/344
7,548,675 B2 * 6/2009 Tatum et al. 385/100
2002/0159725 A1 * 10/2002 Bucklen 385/101
2004/0264879 A1 12/2004 McColloch et al.
2006/0203830 A1 * 9/2006 Doi 370/401
2007/0058976 A1 * 3/2007 Tatum et al. 398/99

OTHER PUBLICATIONS

Opticis, M1-1P0 DVI—HDCP Extension Cable, Stretch your Digital Visual Interface Experience, Version 1.03 Aug. 2003, www.opticis.com, 2pages.

* cited by examiner

Primary Examiner—Ellen Kim
(74) *Attorney, Agent, or Firm*—Workman Nydegger

(57) **ABSTRACT**

An active cable that is configured to communicate over much of its length using one or more optical fibers, and that includes an integrated electrical connector at least one end. The active cable can include a circuit disposed in the integrated cable, the circuit configured to provide pre-emphasis of the second electrical signal. The pre-emphasis can be accomplished by either boosting high frequency content or removing low frequency content from the first or second electrical signals. The active cable can also include circuitry configured to provide equalization of the first electrical signal within the integrated cable. The preemphasis and/or equalization can be fixed, adjustable, or adaptable. The preemphasis and/or equalization can be host selectable via a serial interface of the integrated cable, which can include I2C.

29 Claims, 40 Drawing Sheets

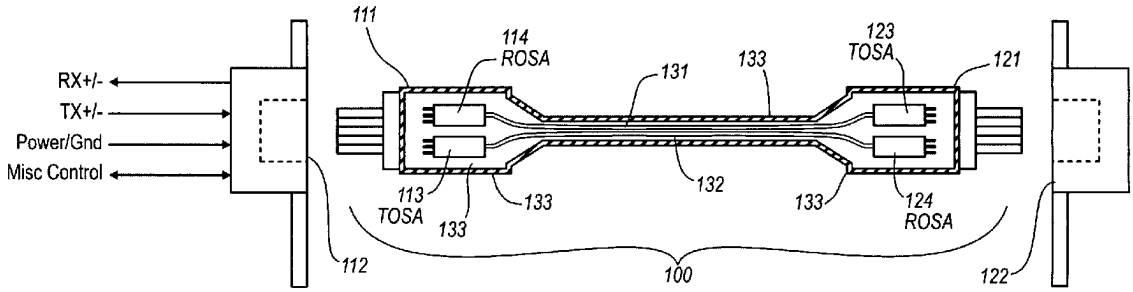

Volex Exhibit 1045
Volex v. Credo

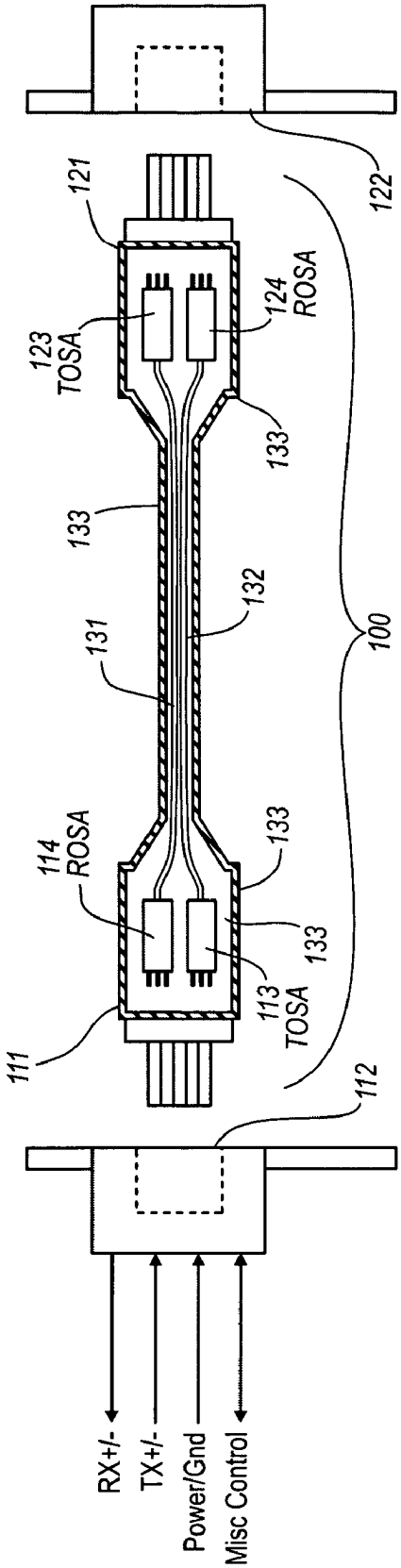
122
121
123
TOSA
124
ROSA
133
133
132
131
100
114
ROSA
133
133
113
TOSA
111
112
RX+/-
TX+/-
Power/Gnd
Misc Control

FIG. 1

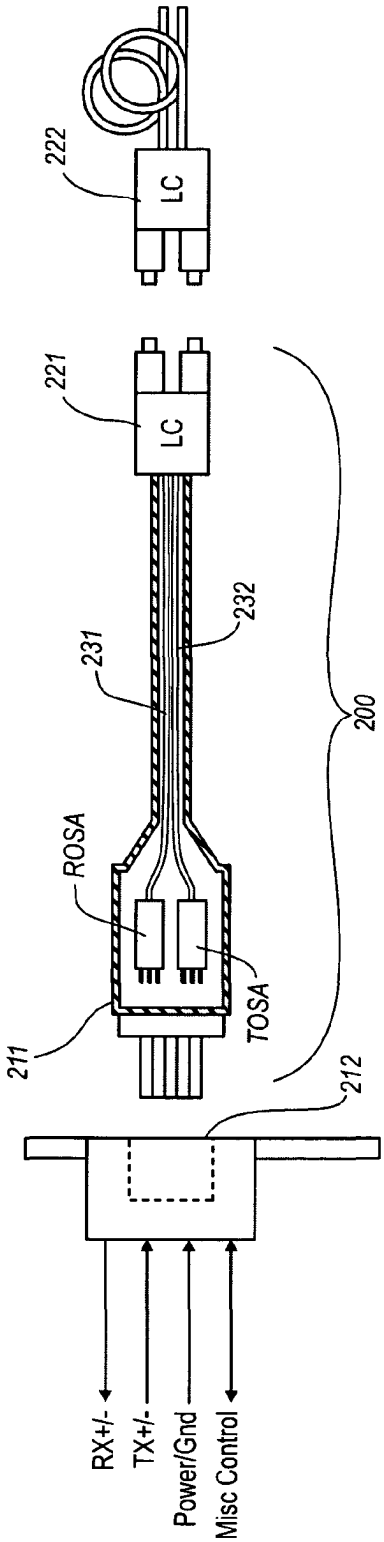
222
LC
221
LC
232
231
200
ROSA
TOSA
211
212
RX+/-
TX+/-
Power/Gnd
Misc Control

FIG. 2A

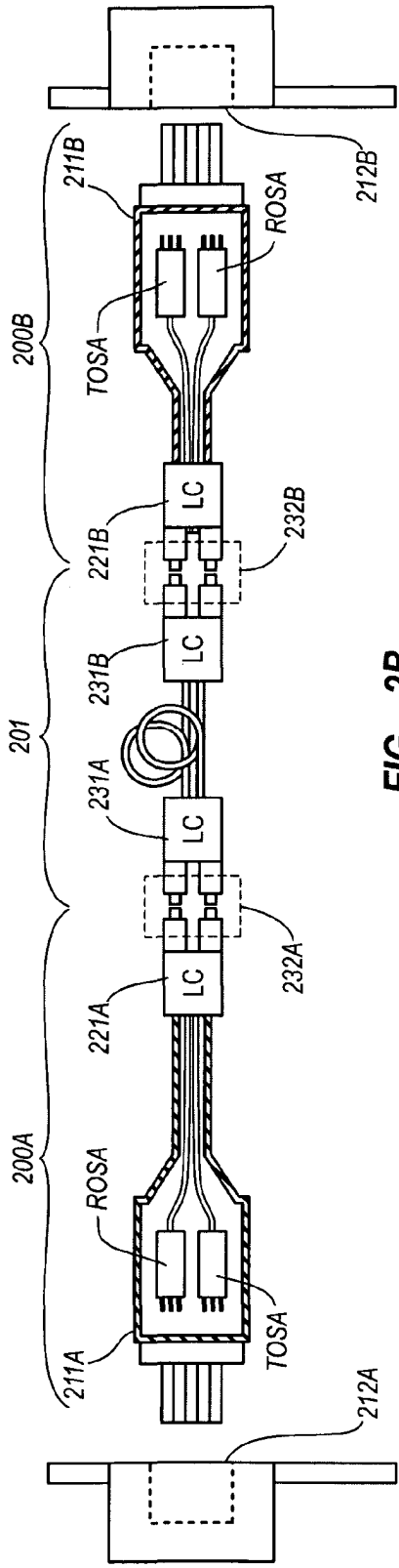
211B
ROSA
212B
200B
TOSA
LC
221B
232B
LC
231B
201
231A
LC
232A
LC
221A
200A
ROSA
TOSA
211A
212A

FIG. 2B

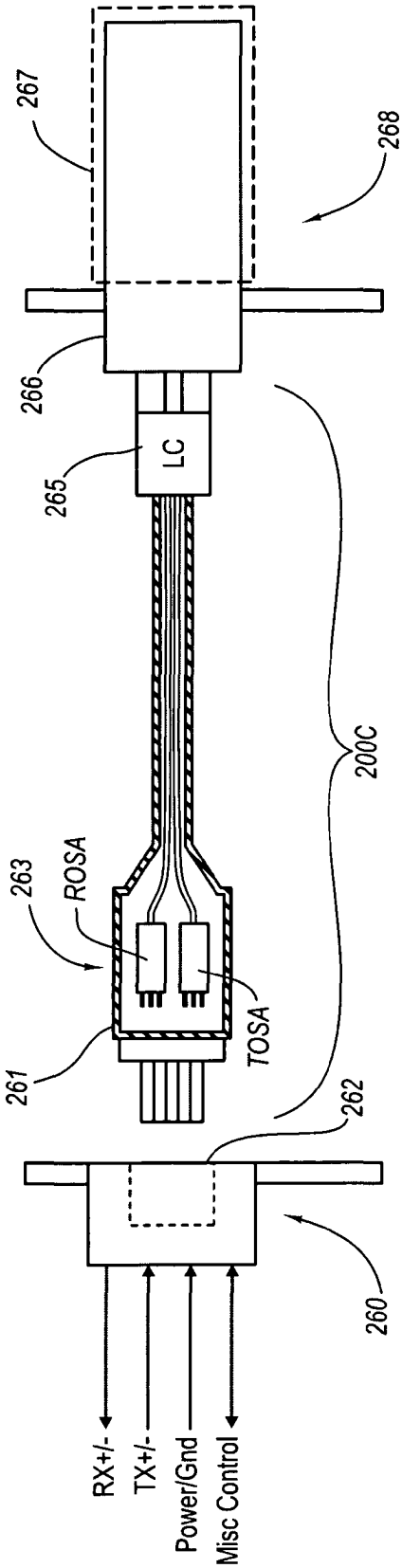
267
268
266
LC
265
200C
263
ROSA
TOSA
261
262
260
RX+/-
TX+/-
Power/Gnd
Misc Control

FIG. 2C

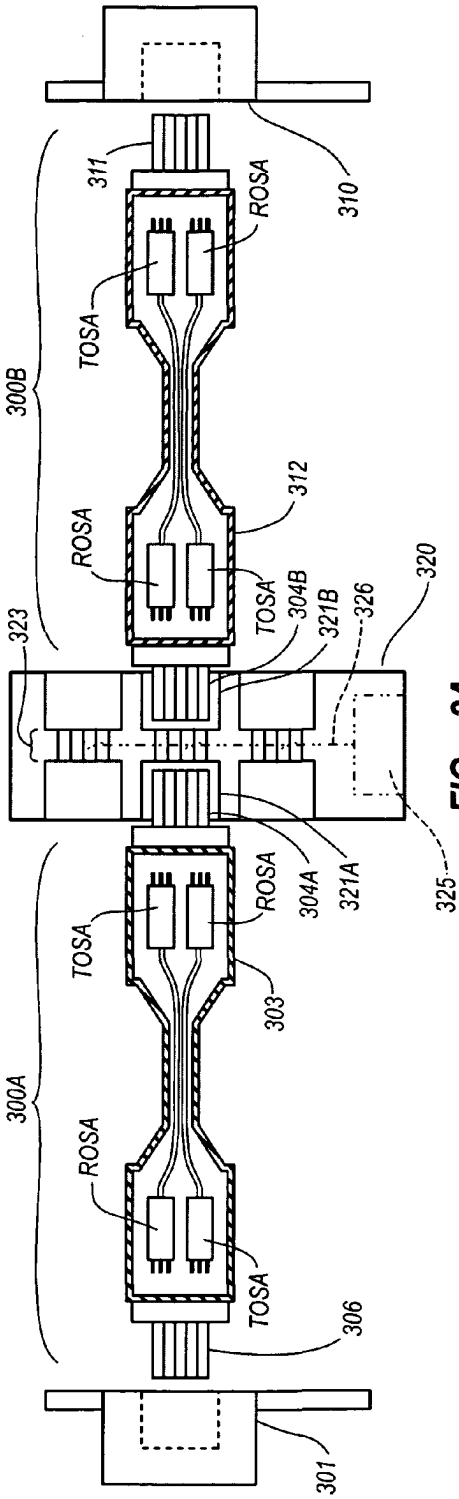
300B
311
ROSA
310
TOSA
312
ROSA
TOSA
304B
321B
326
320
323
325
ROSA
304A
321A
TOSA
303
300A
ROSA
TOSA
306
301

FIG. 3A

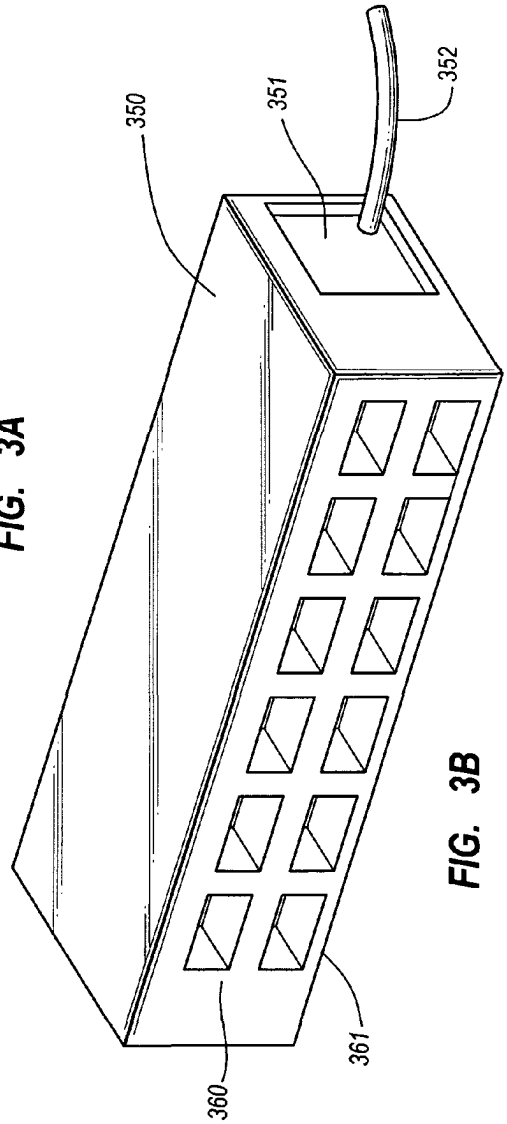
350
351
352
360
361

FIG. 3B

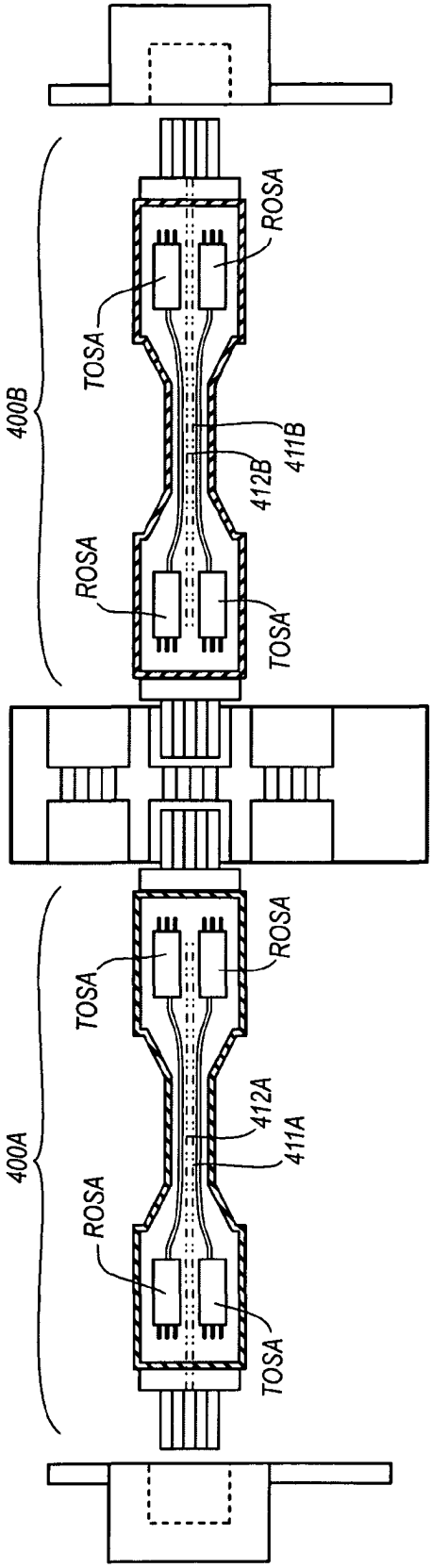
400B
TOSA
ROSA
411B
412B
ROSA
TOSA
400A
TOSA
ROSA
412A
411A
ROSA
TOSA

FIG. 4

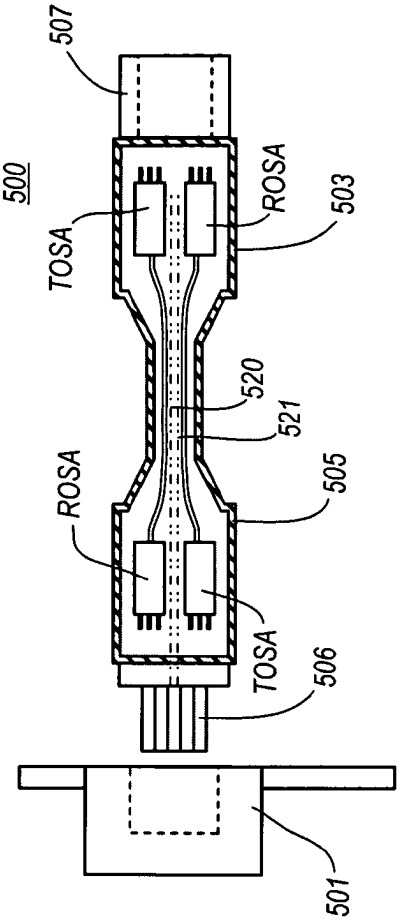
500
507
TOSA
ROSA
503
520
521
505
ROSA
TOSA
506
501

FIG. 5A

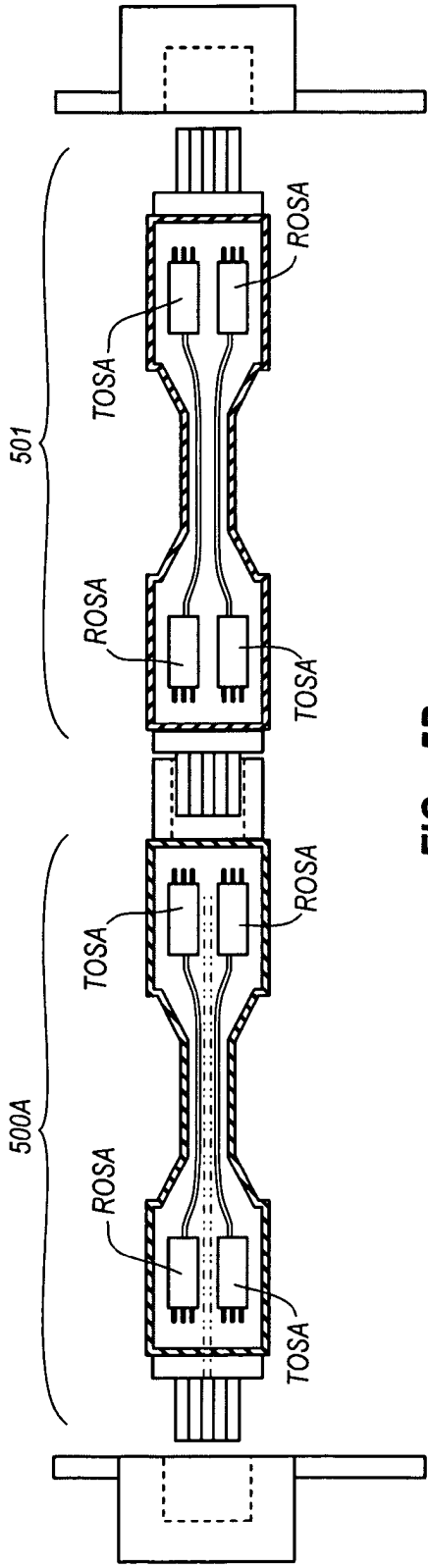
501
TOSA
ROSA
ROSA
TOSA
500A
TOSA
ROSA
ROSA
TOSA

FIG. 5B

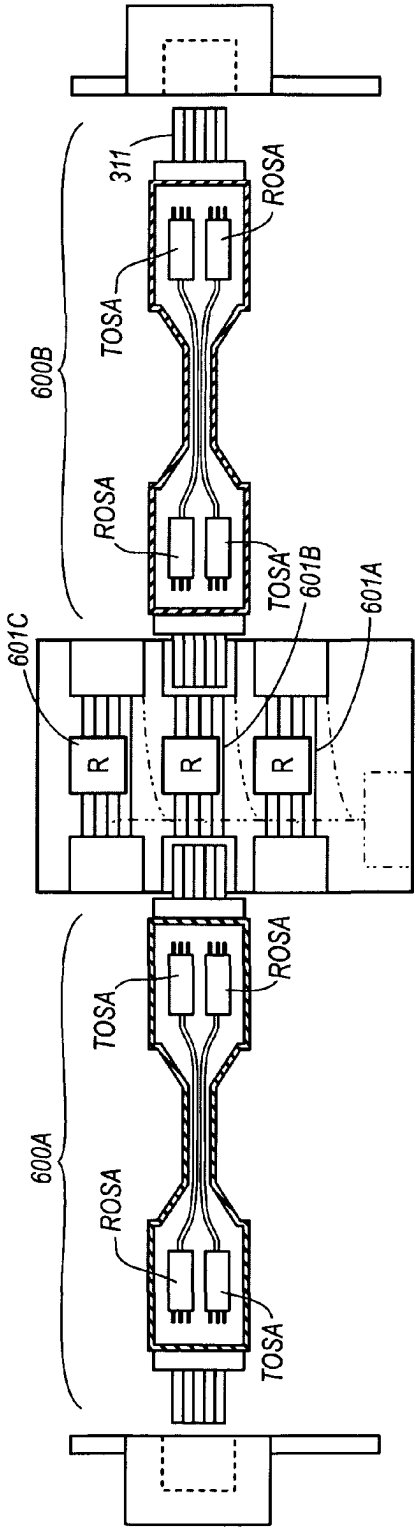
600A
600B
601C
601A
601B
311
ROSA
TOSA
R

FIG. 6A

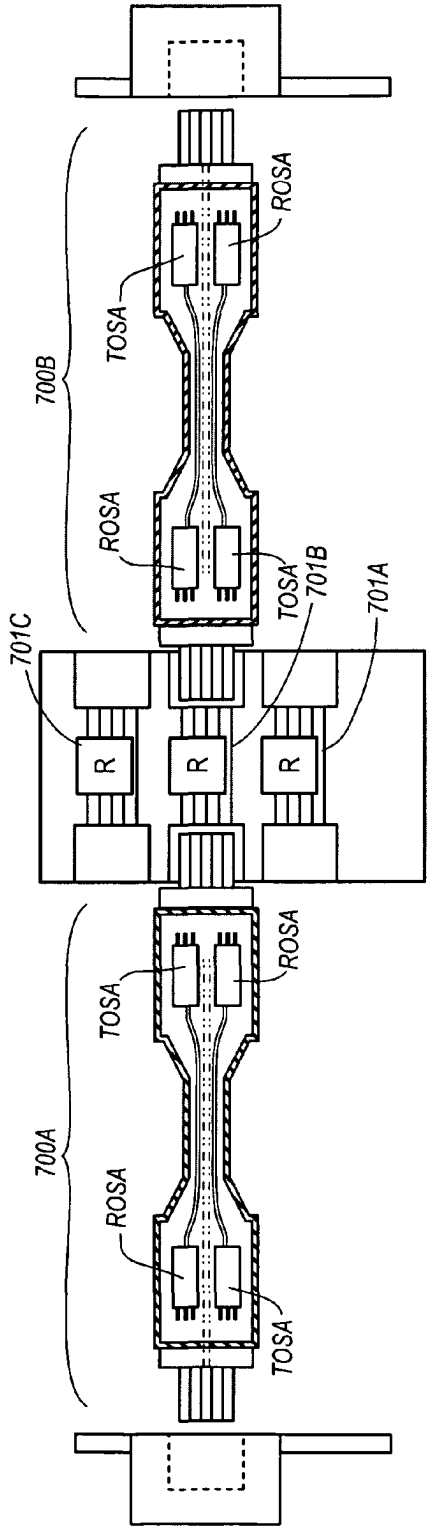
700A
700B
701C
701A
701B
ROSA
TOSA
R

FIG. 6B

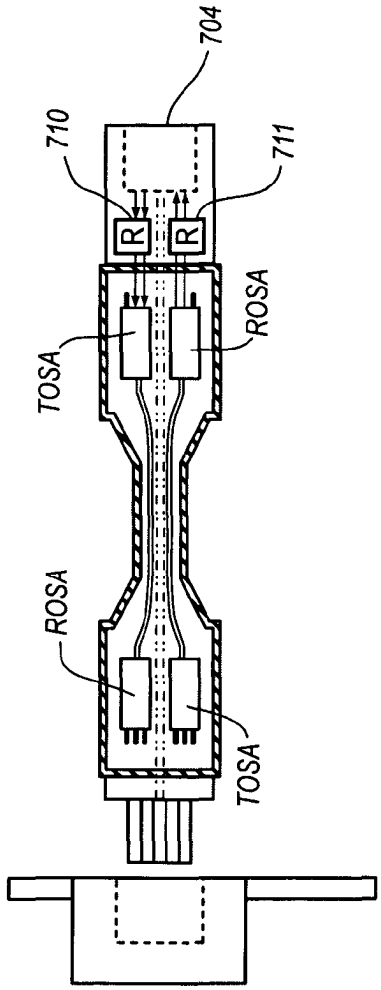
704
710
711
R
R
TOSA
ROSA
ROSA
TOSA

FIG. 7A

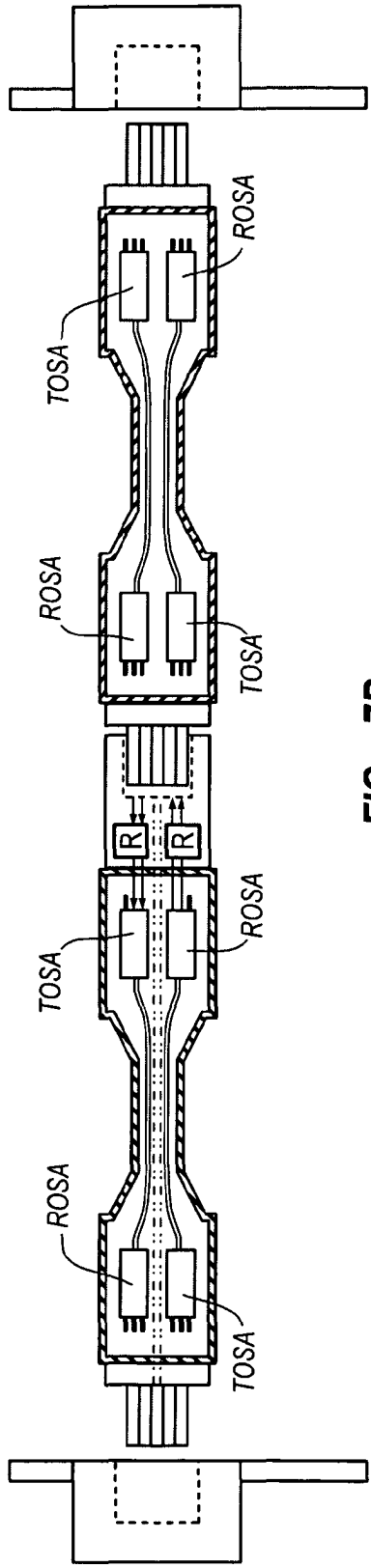
ROSA
TOSA
ROSA
TOSA
R
R
TOSA
ROSA
ROSA
TOSA

FIG. 7B

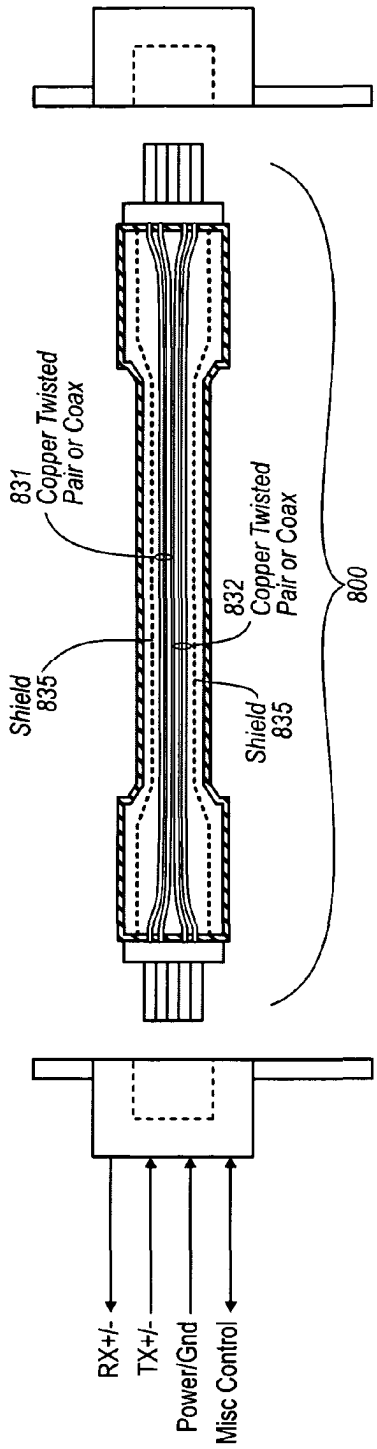
RX+/-
TX+/-
Power/Gnd
Misc Control
Shield 835
831 Copper Twisted Pair or Coax
Shield 835
832 Copper Twisted Pair or Coax
800

FIG. 8A

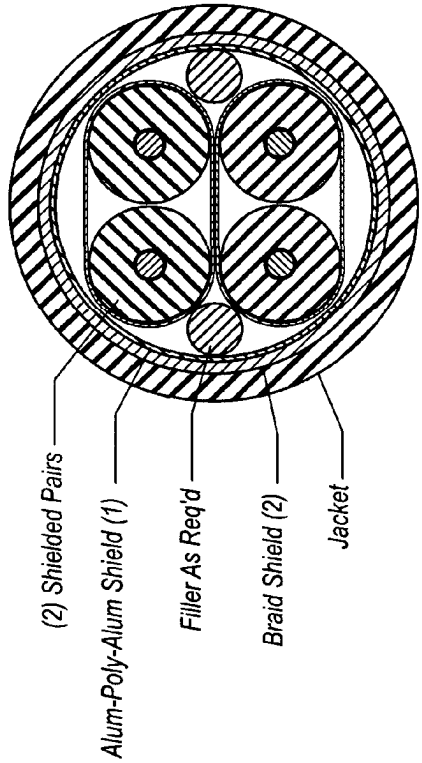
(2) Shielded Pairs
Alum-Poly-Alum Shield (1)
Filler As Req'd
Braid Shield (2)
Jacket

FIG. 8B

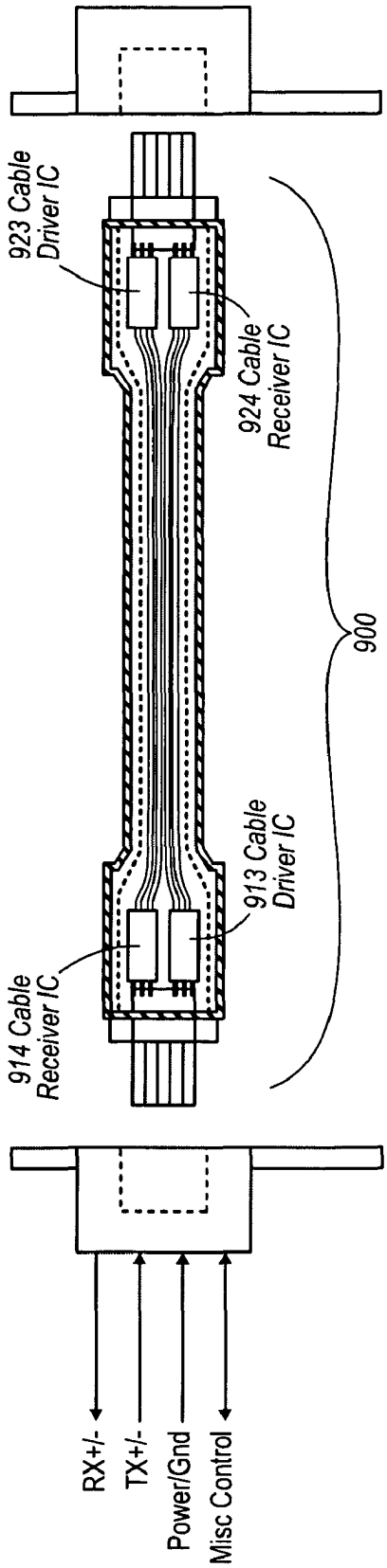
923 Cable Driver IC
924 Cable Receiver IC
900
913 Cable Driver IC
914 Cable Receiver IC
RX+/-
TX+/-
Power/Gnd
Misc Control

FIG. 9

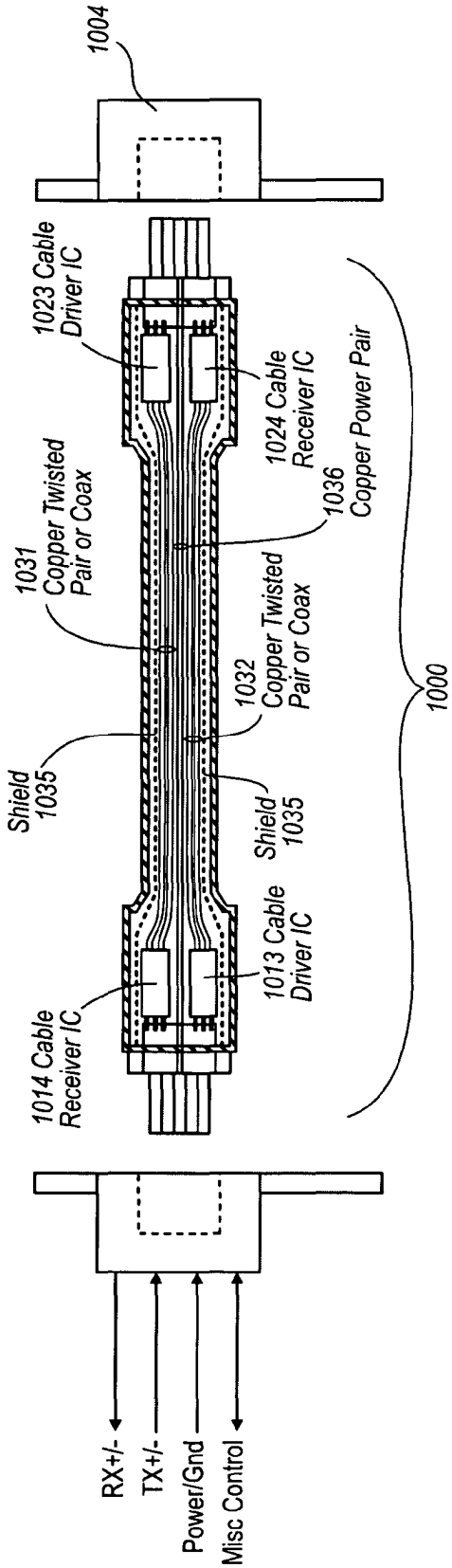
1004
1023 Cable Driver IC
1024 Cable Receiver IC
1036 Copper Power Pair
1031 Copper Twisted Pair or Coax
1032 Copper Twisted Pair or Coax
1000
Shield 1035
Shield 1035
1013 Cable Driver IC
1014 Cable Receiver IC
RX+/-
TX+/-
Power/Gnd
Misc Control

FIG. 10

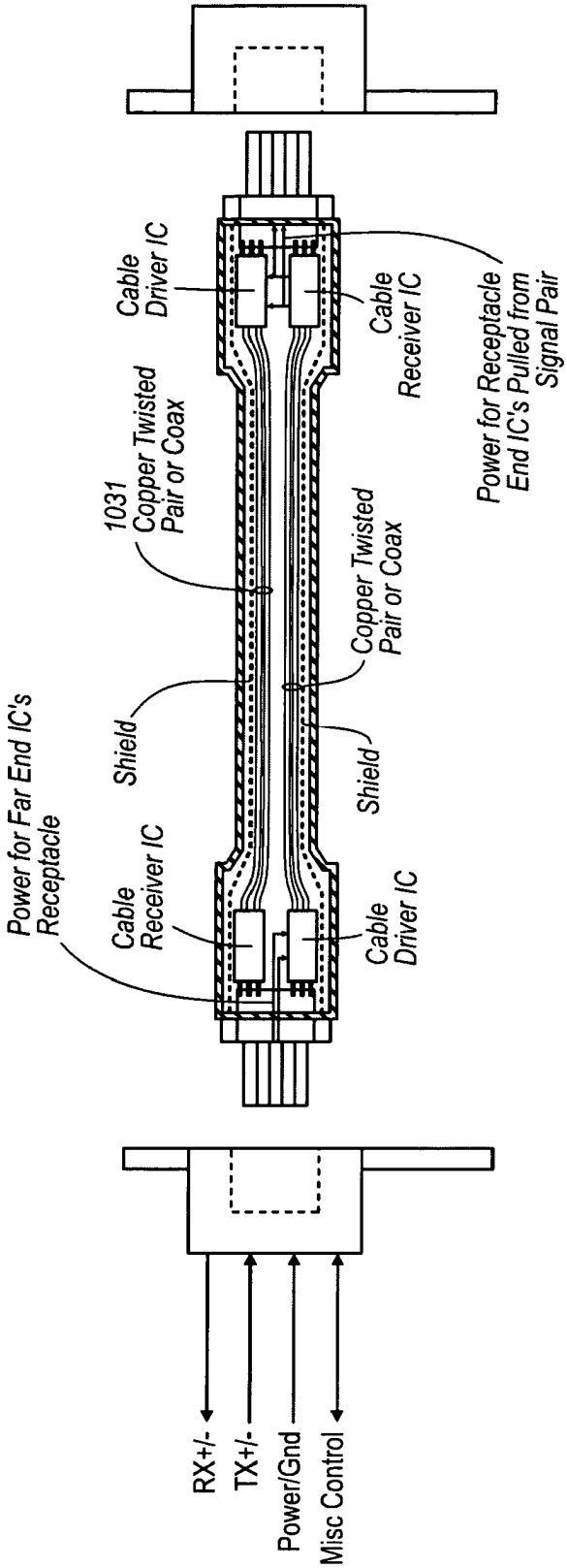
Cable Driver IC
Cable Receiver IC
Power for Receptacle End IC's Pulled from Signal Pair
1031 Copper Twisted Pair or Coax
Copper Twisted Pair or Coax
Shield
Shield
Power for Far End IC's Receptacle
Cable Receiver IC
Cable Driver IC
RX+/-
TX+/-
Power/Gnd
Misc Control

FIG. 11

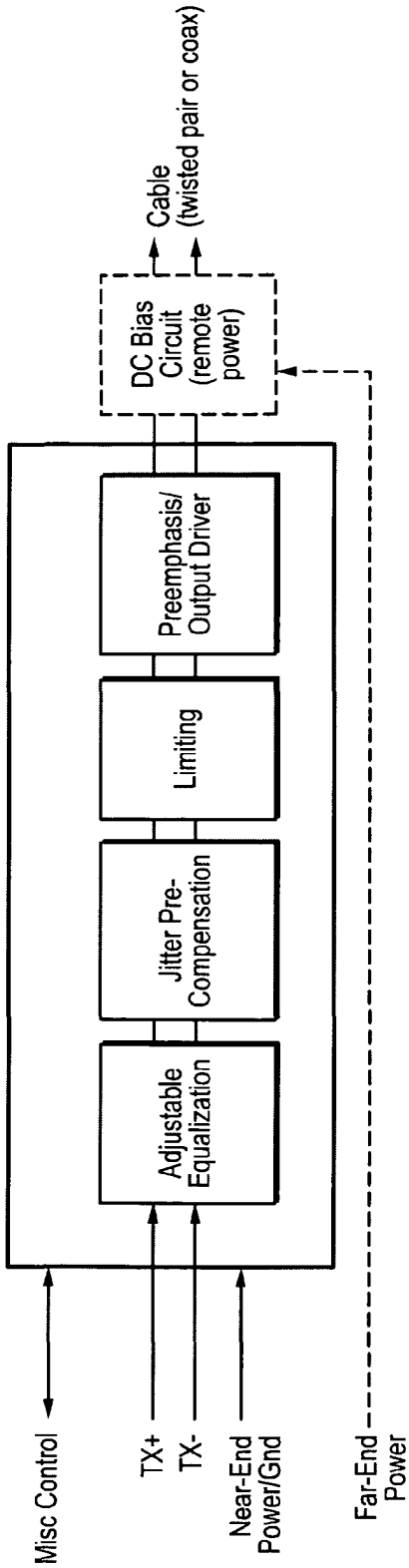

FIG. 12A

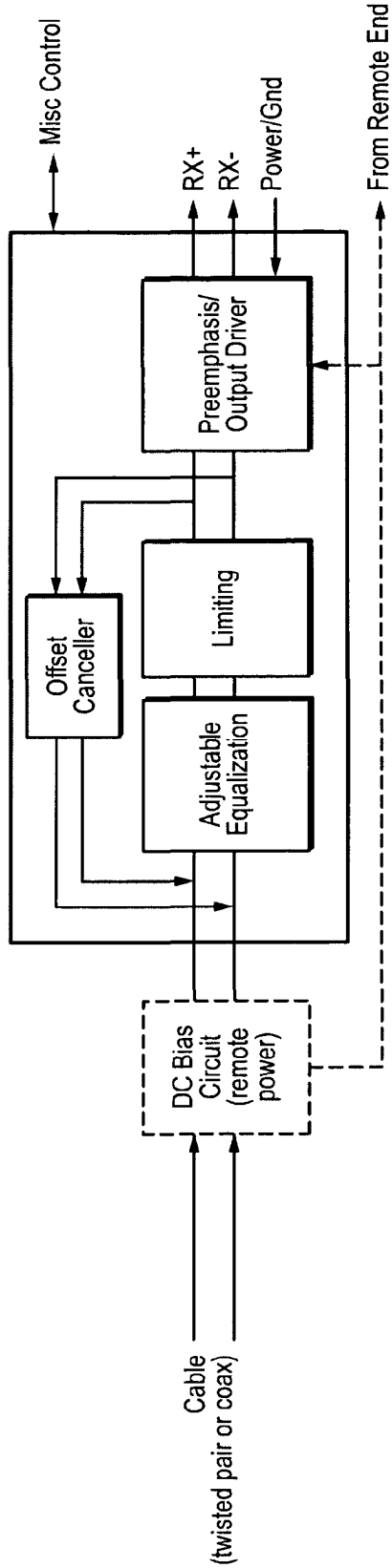

FIG. 12B

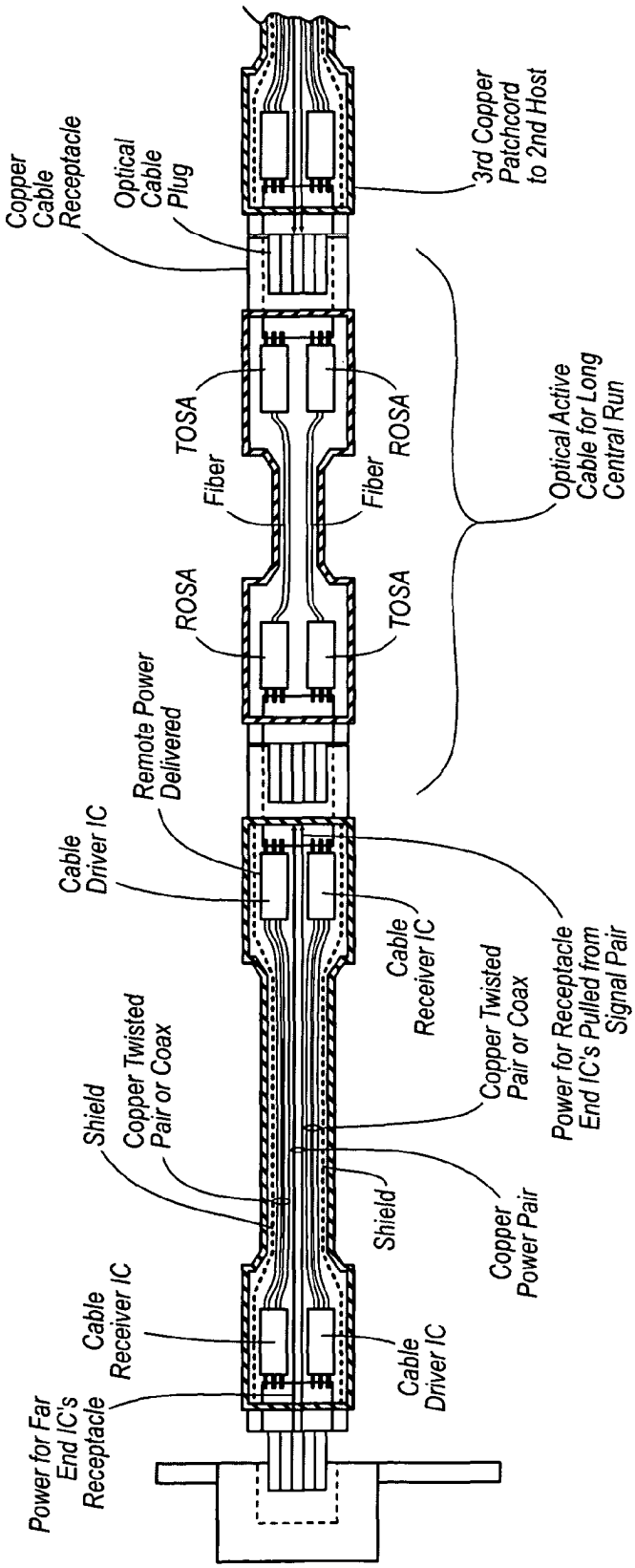
Copper Cable Receptacle
Optical Cable Plug
3rd Copper Patchcord to 2nd Host
TOSA
Fiber
ROSA
Fiber
ROSA
TOSA
Optical Active Cable for Long Central Run
Remote Power Delivered
Cable Driver IC
Cable Receiver IC
Power for Receptacle End IC's Pulled from Signal Pair
Copper Twisted Pair or Coax
Shield
Copper Twisted Pair or Coax
Shield
Copper Power Pair
Cable Receiver IC
Cable Driver IC
Power for Far End IC's Receptacle

FIG. 13A

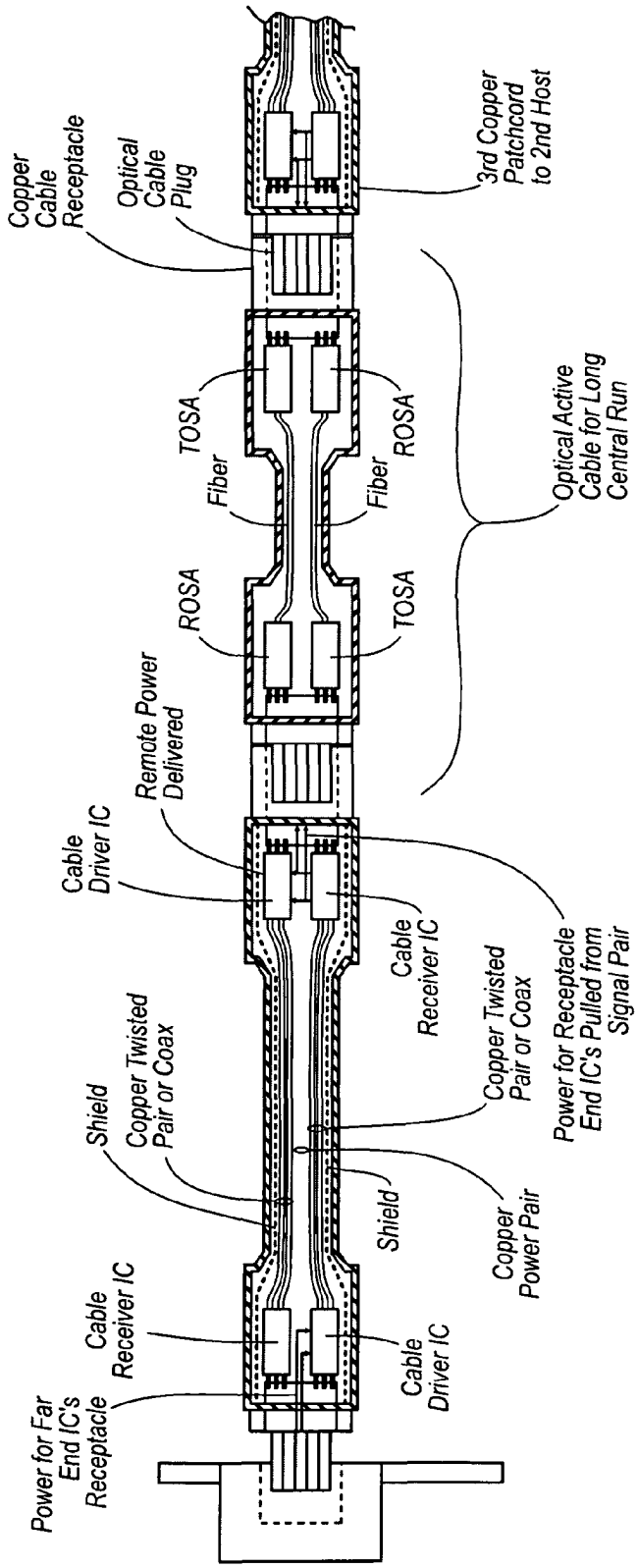
Copper Cable Receptacle
Optical Cable Plug
3rd Copper Patchcord to 2nd Host
TOSA
ROSA
Fiber
Fiber
ROSA
TOSA
Optical Active Cable for Long Central Run
Remote Power Delivered
Cable Driver IC
Cable Receiver IC
Power for Receptacle End IC's Pulled from Signal Pair
Copper Twisted Pair or Coax
Shield
Copper Twisted Pair or Coax
Shield
Copper Power Pair
Cable Receiver IC
Cable Driver IC
Power for Far End IC's Receptacle

FIG. 13B

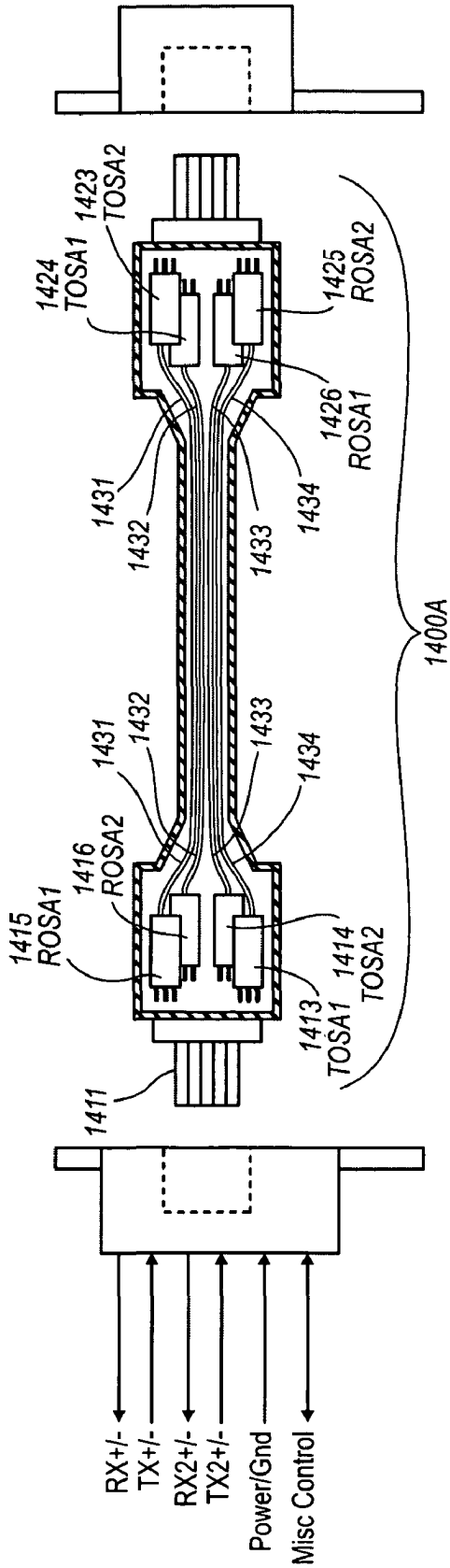
1423
TOSA2
1424
TOSA1
1425
ROSA2
1426
ROSA1
1431
1432
1433
1434
1400A
1431
1432
1433
1434
1416
ROSA2
1415
ROSA1
1414
TOSA2
1413
TOSA1
1411
RX+/-
TX+/-
RX2+/-
TX2+/-
Power/Gnd
Misc Control

FIG. 14A

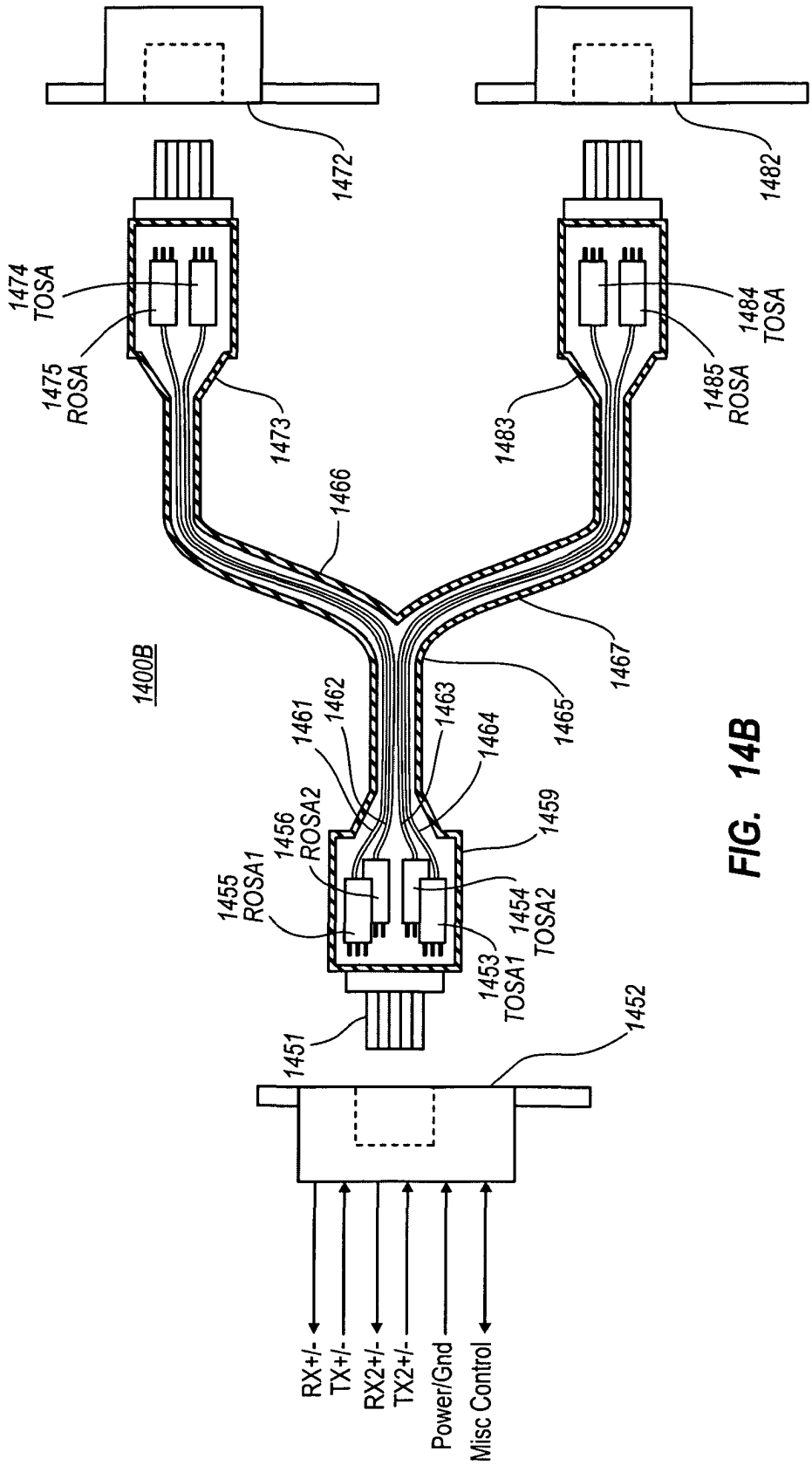
1400B
1472
1474 TOSA
1475 ROSA
1473
1466
1482
1484 TOSA
1485 ROSA
1483
1467
1465
1461
1462
1463
1464
1459
1456 ROSA2
1455 ROSA1
1454 TOSA2
1453 TOSA1
1451
1452
RX+/-
TX+/-
RX2+/-
TX2+/-
Power/Gnd
Misc Control

FIG. 14B

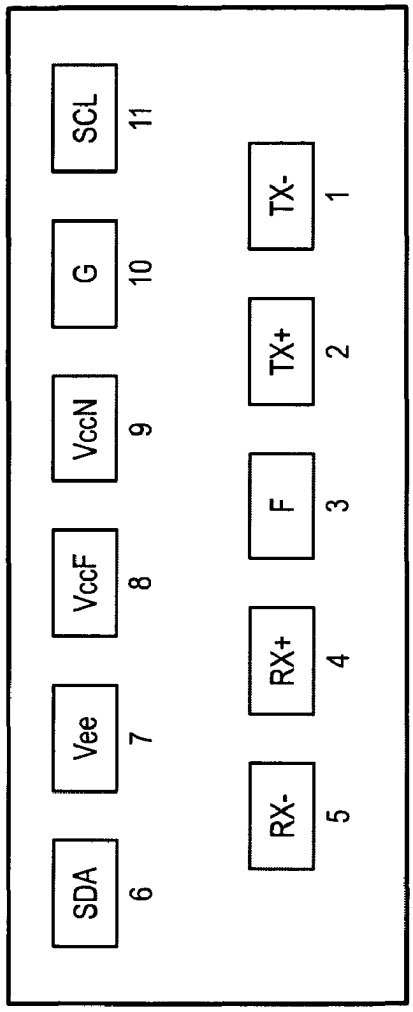

Cable Plug End

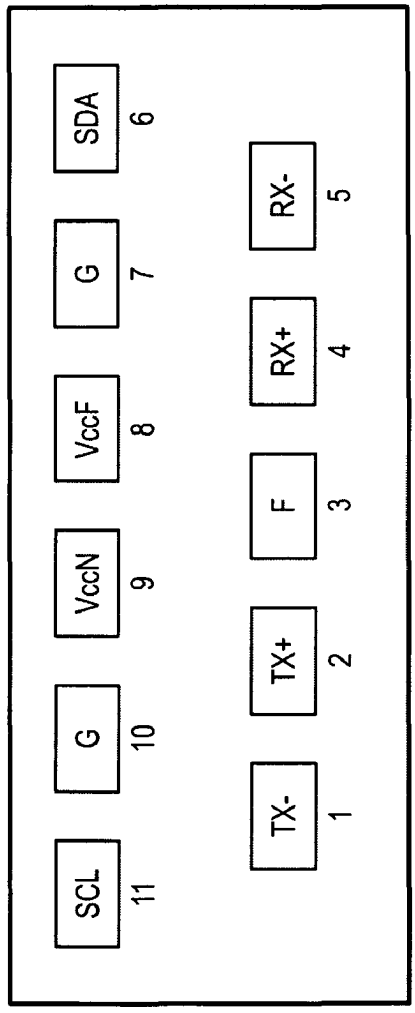

Receptacle Plug End

FIG. 15A

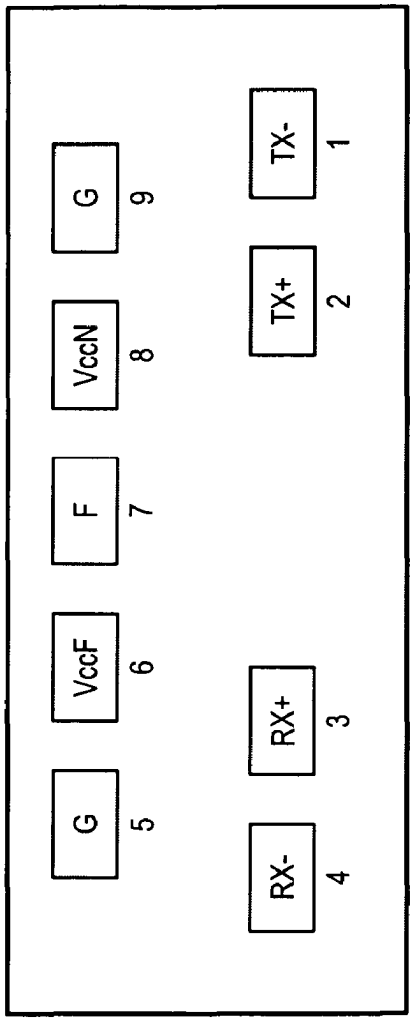

Cable Plug End

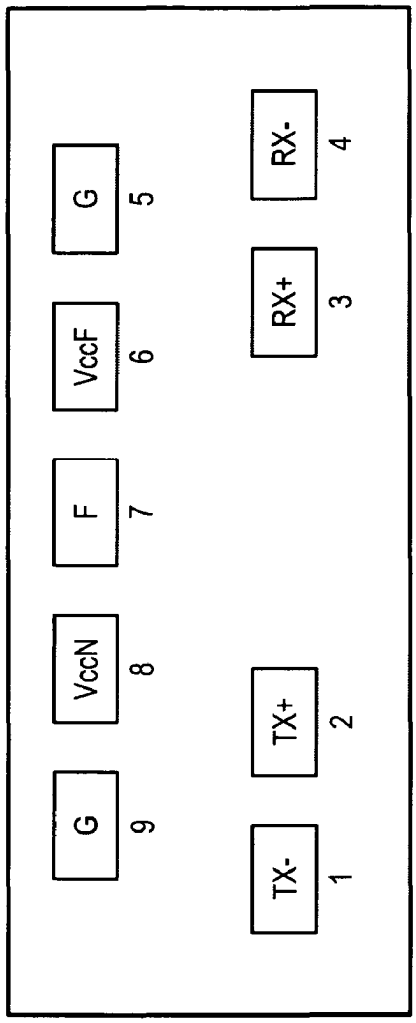

Receptacle Plug End

FIG. 15B

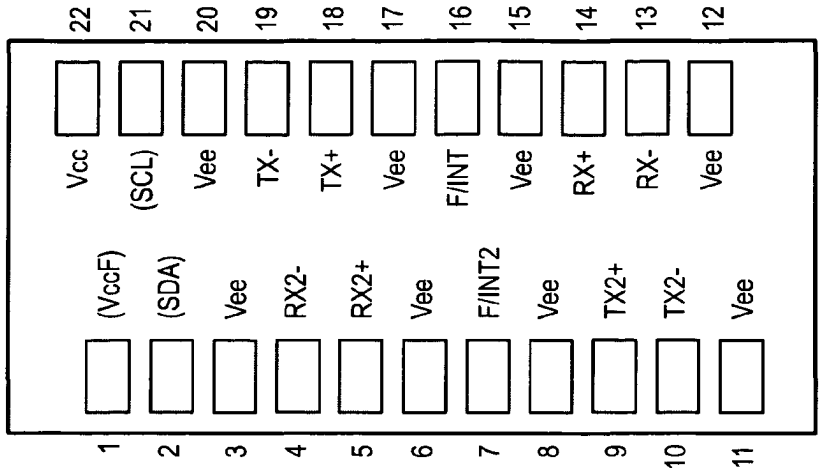

FIG. 15E

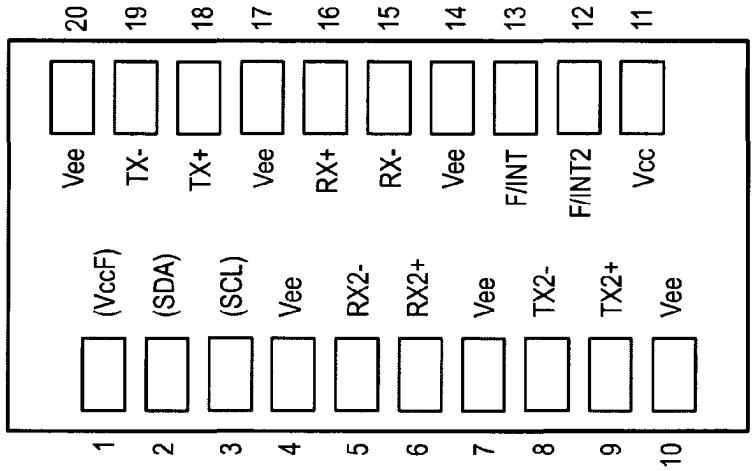

FIG. 15D

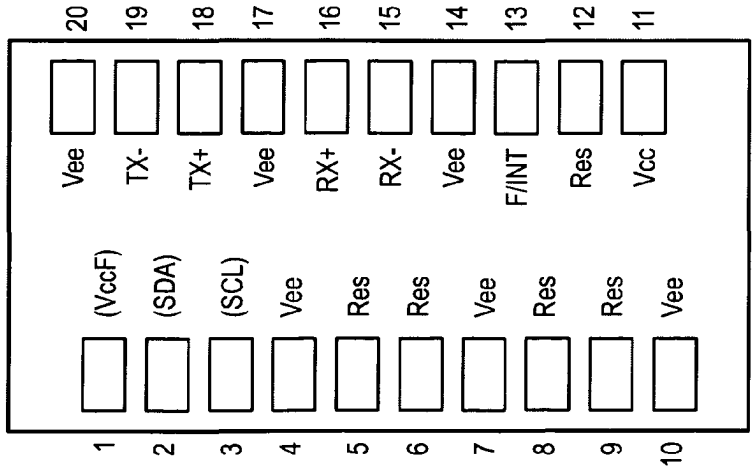

FIG. 15C

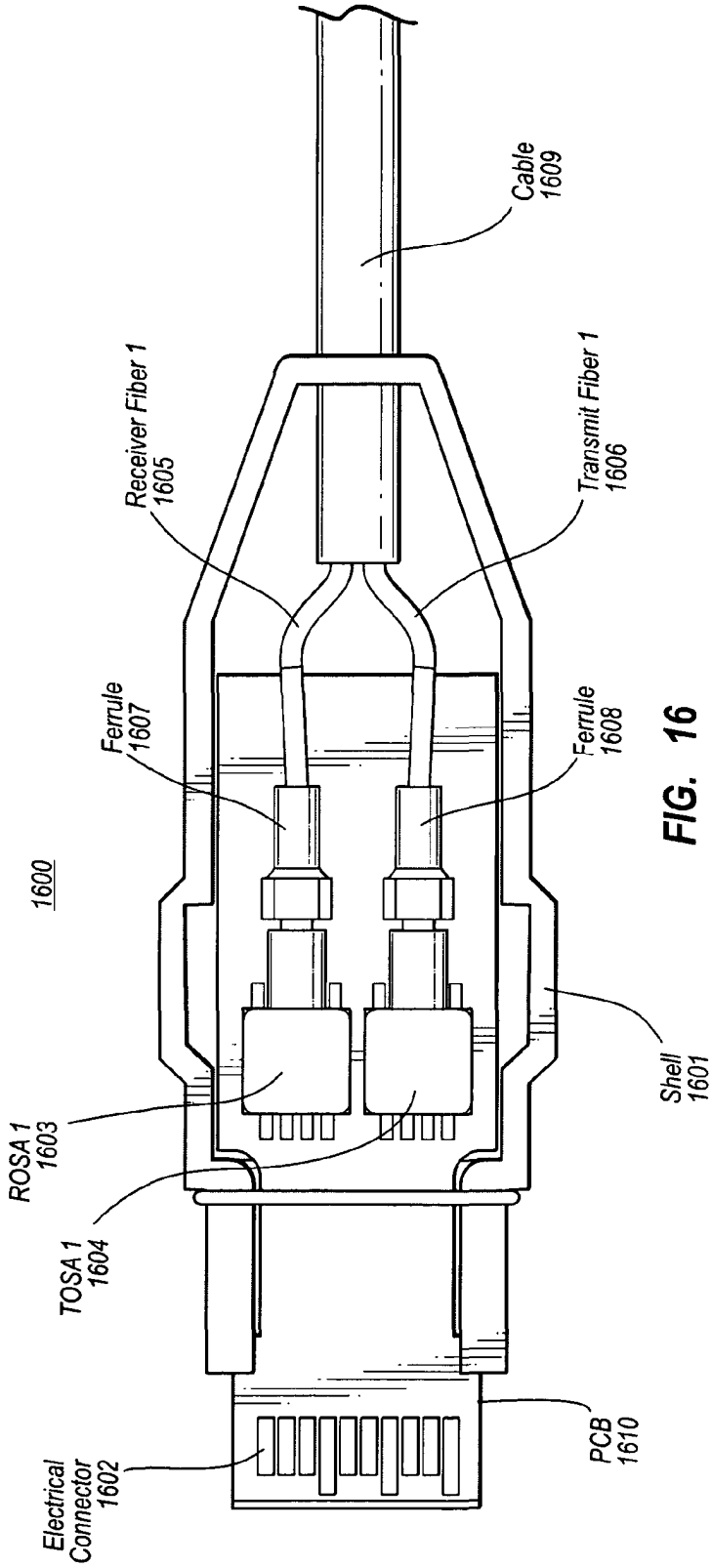
1600
Electrical Connector 1602
ROSA 1 1603
TOSA 1 1604
Receiver Fiber 1 1605
Ferrule 1607
Cable 1609
PCB 1610
Shell 1601
Ferrule 1608
Transmit Fiber 1 1606

FIG. 16

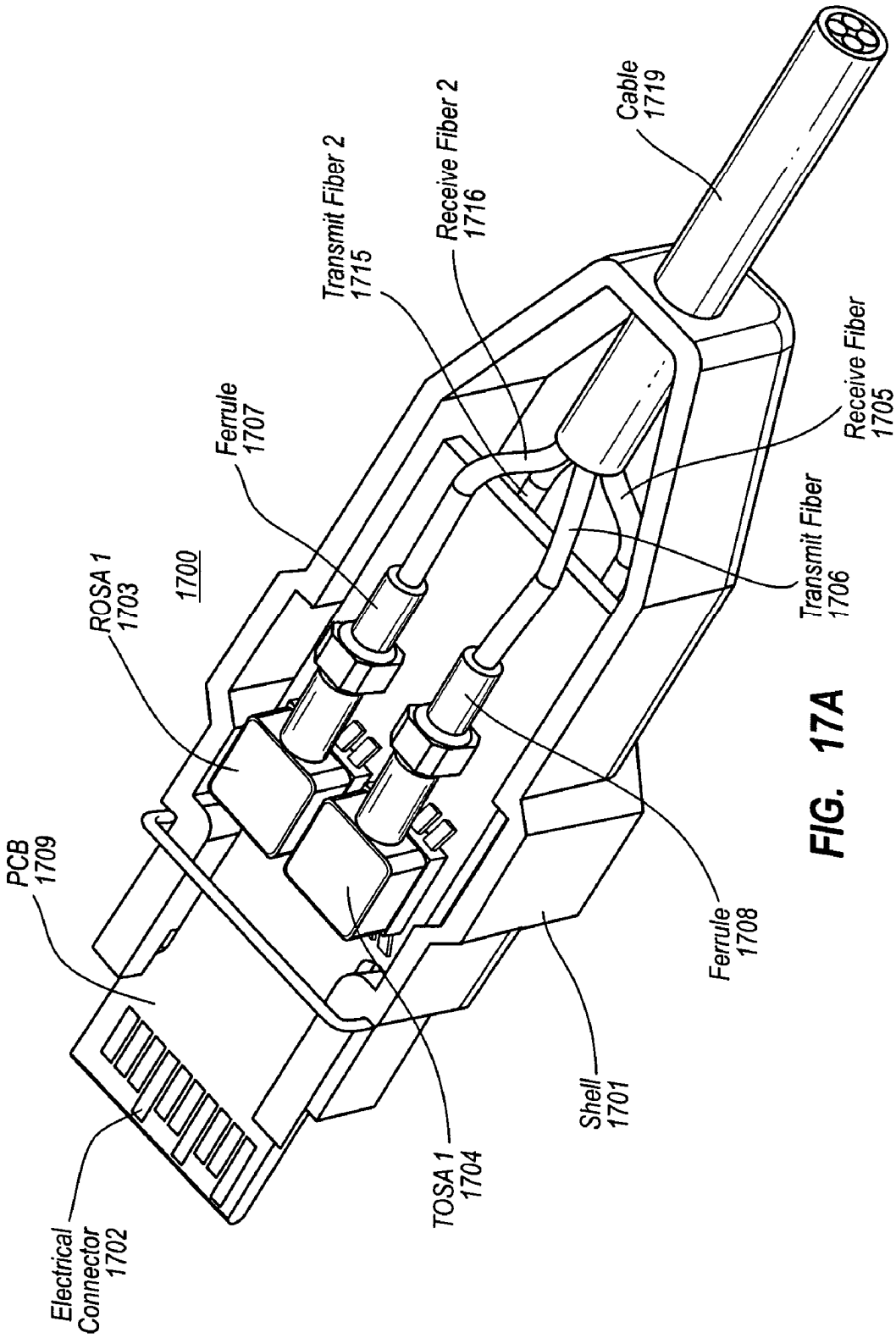
Electrical Connector 1702
PCB 1709
ROSA 1 1703
1700
Ferrule 1707
Transmit Fiber 2 1715
Receive Fiber 2 1716
Cable 1719
Receive Fiber 1705
Transmit Fiber 1706
TOSA 1 1704
Shell 1701
Ferrule 1708

FIG. 17A

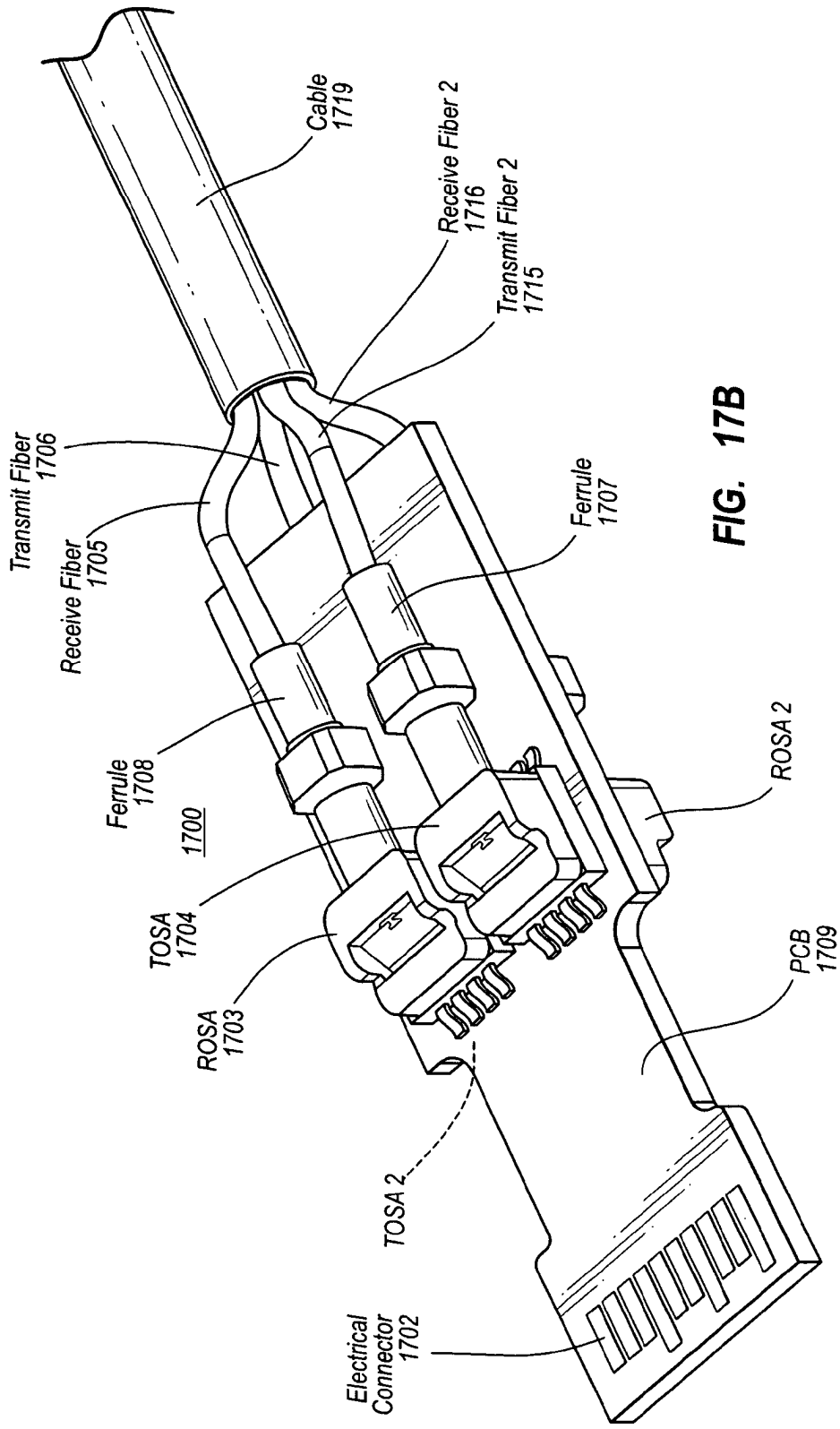
Cable
1719
Receive Fiber 2
1716
Transmit Fiber 2
1715
Transmit Fiber
1706
Receive Fiber
1705
Ferrule
1707
Ferrule
1708
1700
TOSA
1704
ROSA
1703
ROSA 2
PCB
1709
TOSA 2
Electrical
Connector
1702

FIG. 17B

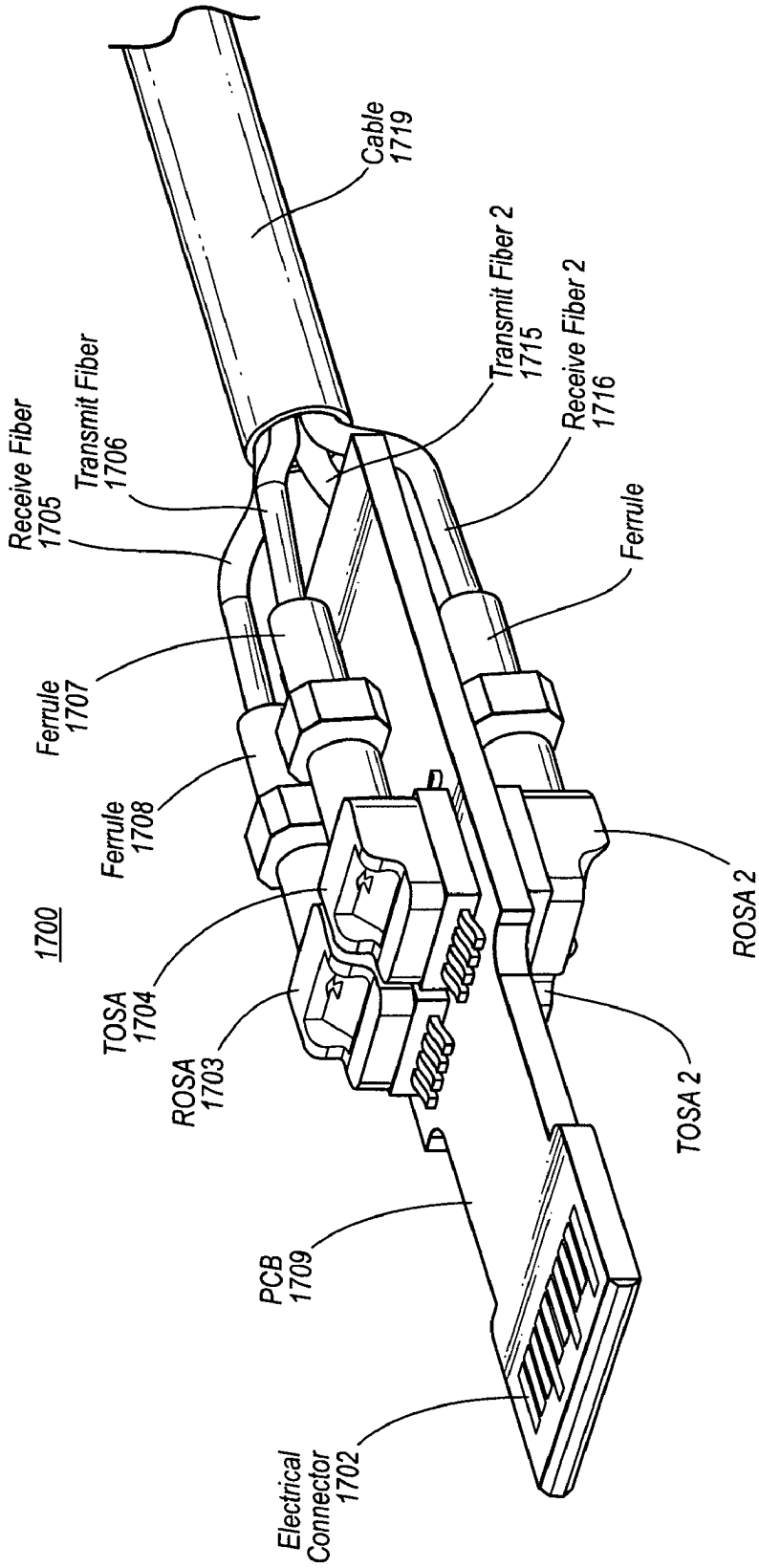
1700
Receive Fiber 1705
Transmit Fiber 1706
Ferrule 1707
Ferrule 1708
TOSA 1704
ROSA 1703
PCB 1709
Electrical Connector 1702
Cable 1719
Transmit Fiber 2 1715
Receive Fiber 2 1716
Ferrule
ROSA 2
TOSA 2

FIG. 17C

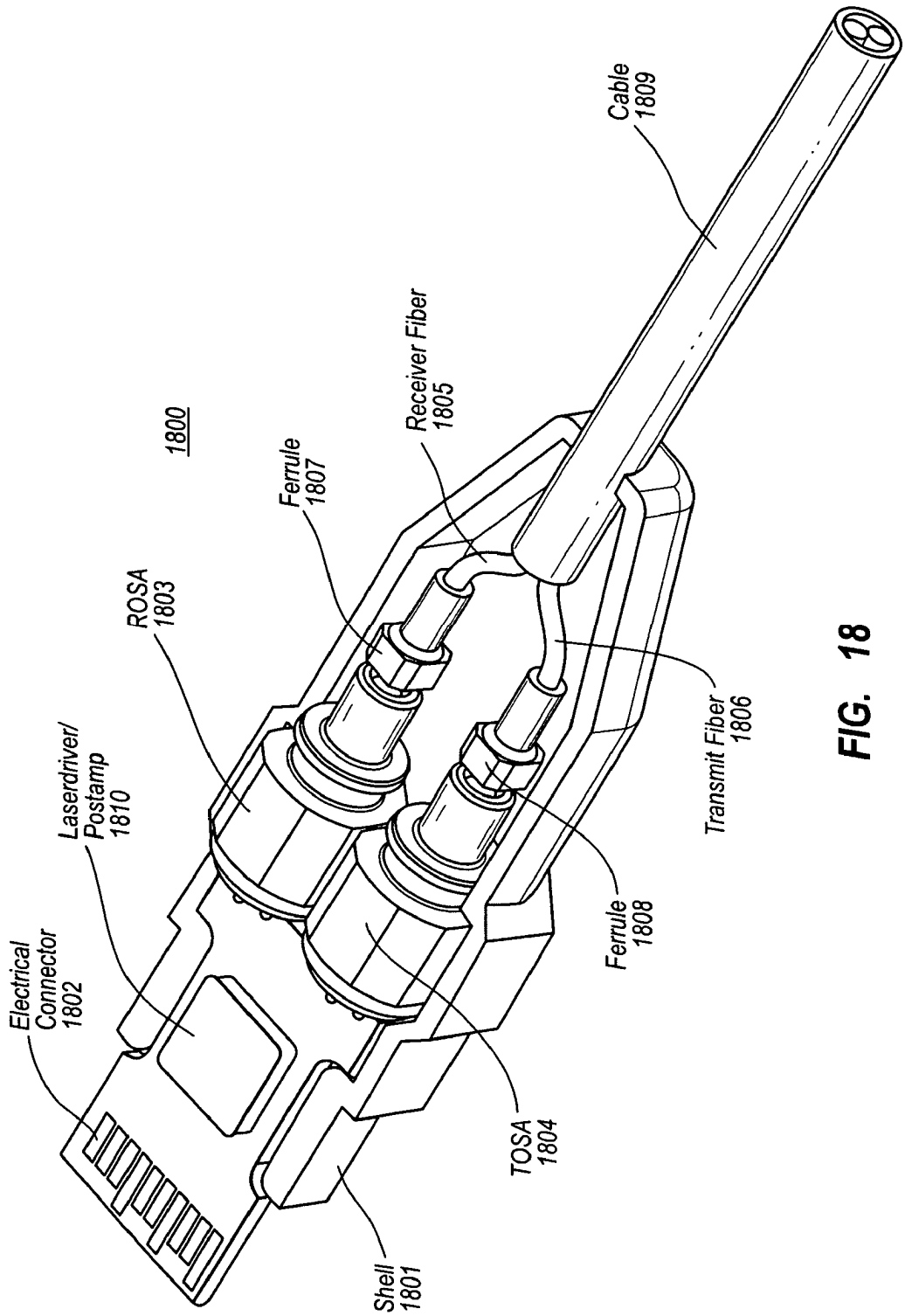
1800
Electrical Connector 1802
Laserdriver/ Postamp 1810
ROSA 1803
Ferrule 1807
Receiver Fiber 1805
Cable 1809
Transmit Fiber 1806
Ferrule 1808
TOSA 1804
Shell 1801

FIG. 18

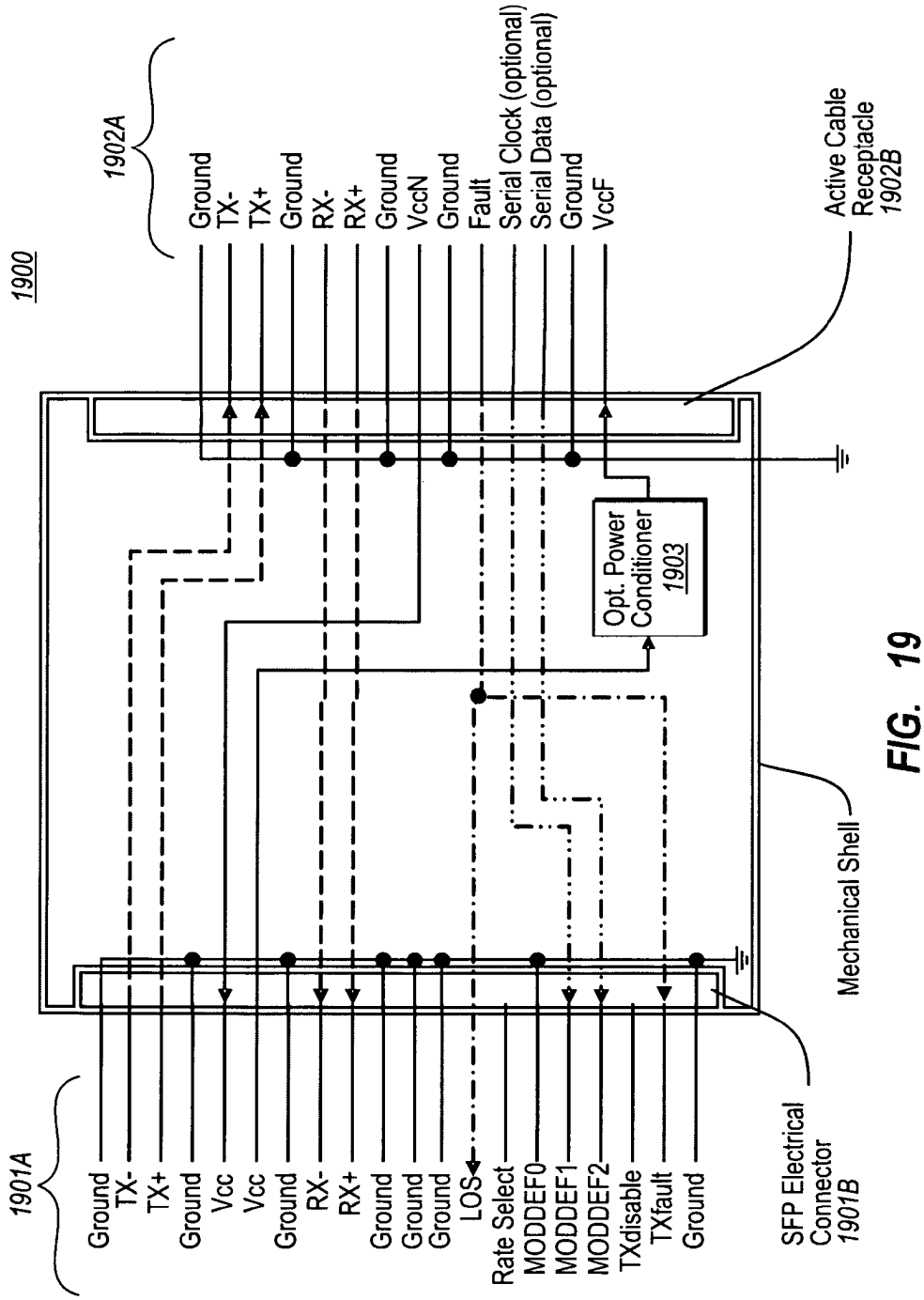
1900
1902A
Ground
TX-
TX+
Ground
RX-
RX+
Ground
VccN
Ground
Fault
Serial Clock (optional)
Serial Data (optional)
Ground
VccF
Active Cable Receptacle 1902B
Opt. Power Conditioner 1903
Mechanical Shell
1901A
Ground
TX-
TX+
Ground
Vcc
Vcc
Ground
RX-
RX+
Ground
Ground
Ground
LOS
Rate Select
MODDEF0
MODDEF1
MODDEF2
TXdisable
TXfault
Ground
SFP Electrical Connector 1901B

FIG. 19

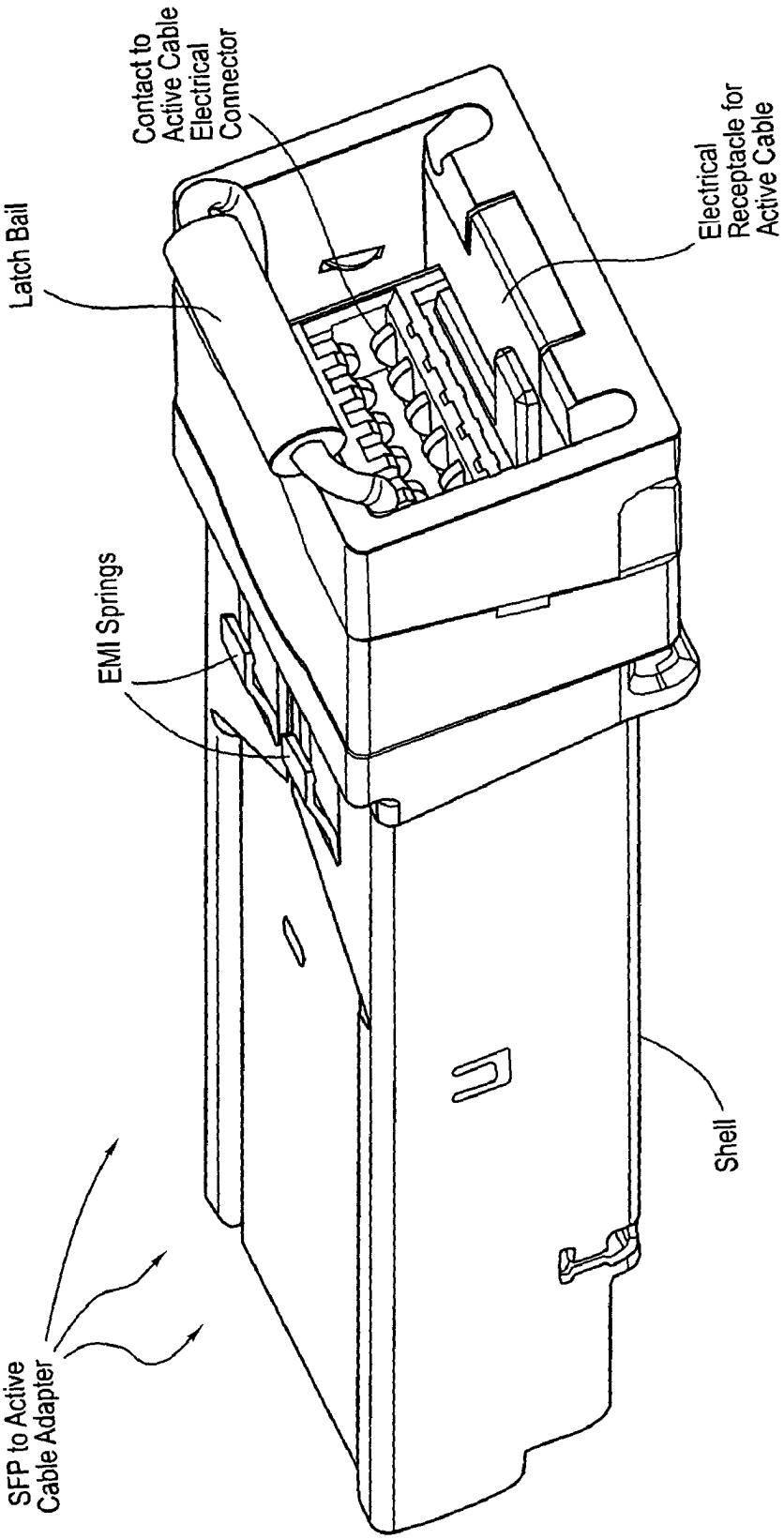
Contact to Active Cable Electrical Connector
Latch Bail
Electrical Receptacle for Active Cable
EMI Springs
Shell
SFP to Active Cable Adapter

FIG. 20A

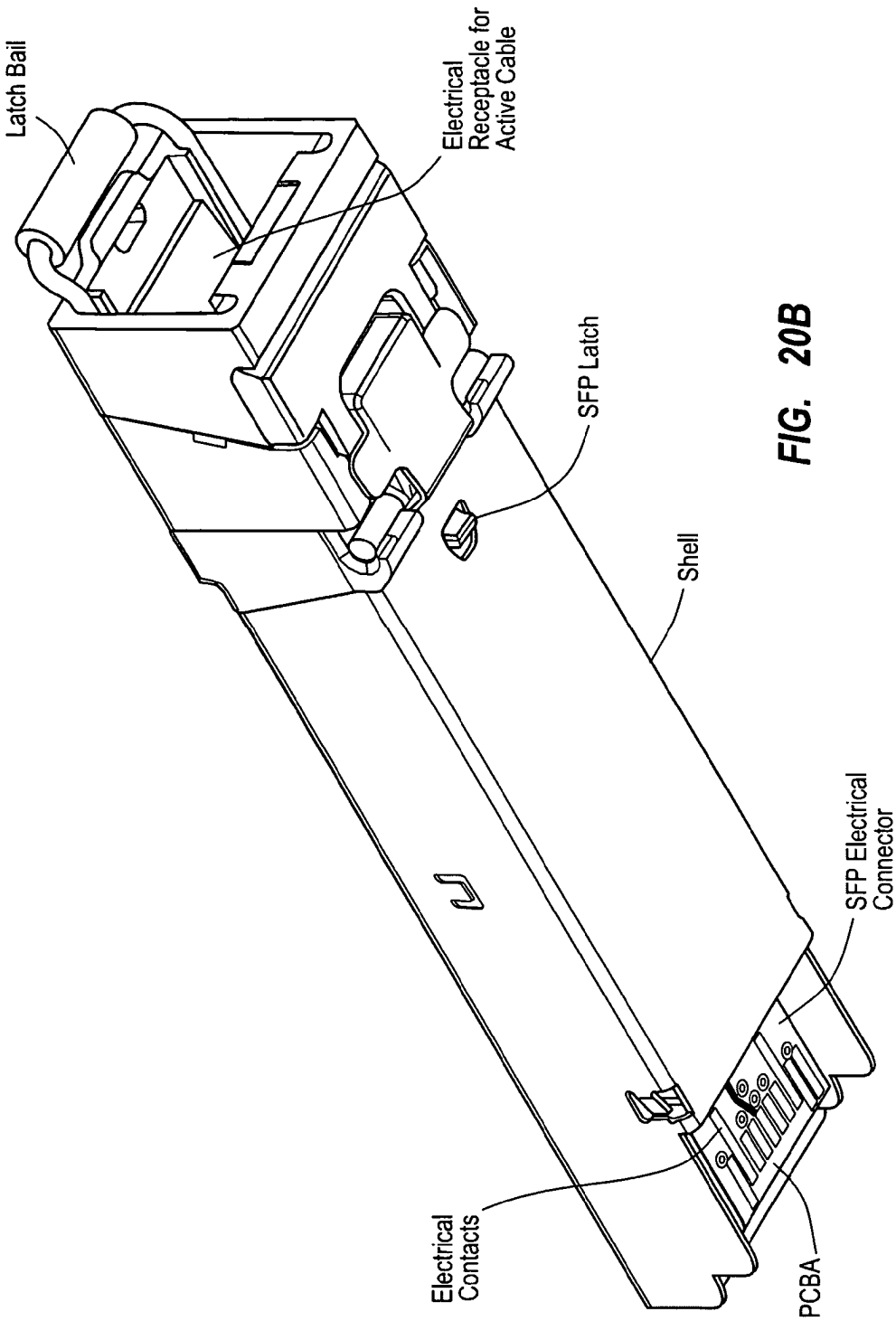
Latch Bail
Electrical Receptacle for Active Cable
SFP Latch
Shell
SFP Electrical Connector
Electrical Contacts
PCBA

FIG. 20B

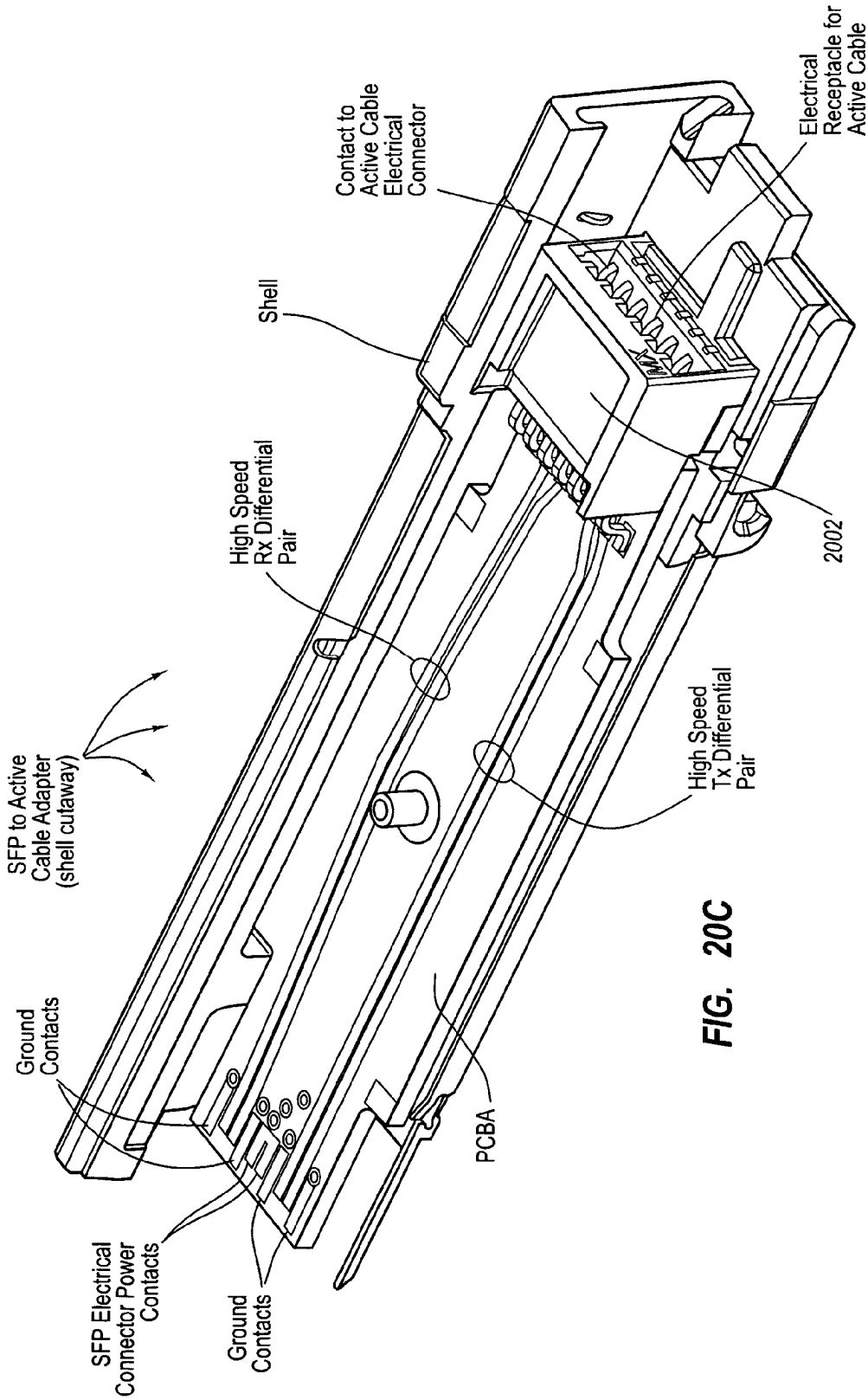
Contact to Active Cable Electrical Connector
Electrical Receptacle for Active Cable
Shell
High Speed Rx Differential Pair
2002
SFP to Active Cable Adapter (shell cutaway)
High Speed Tx Differential Pair
Ground Contacts
PCBA
SFP Electrical Connector Power Contacts
Ground Contacts

FIG. 20C

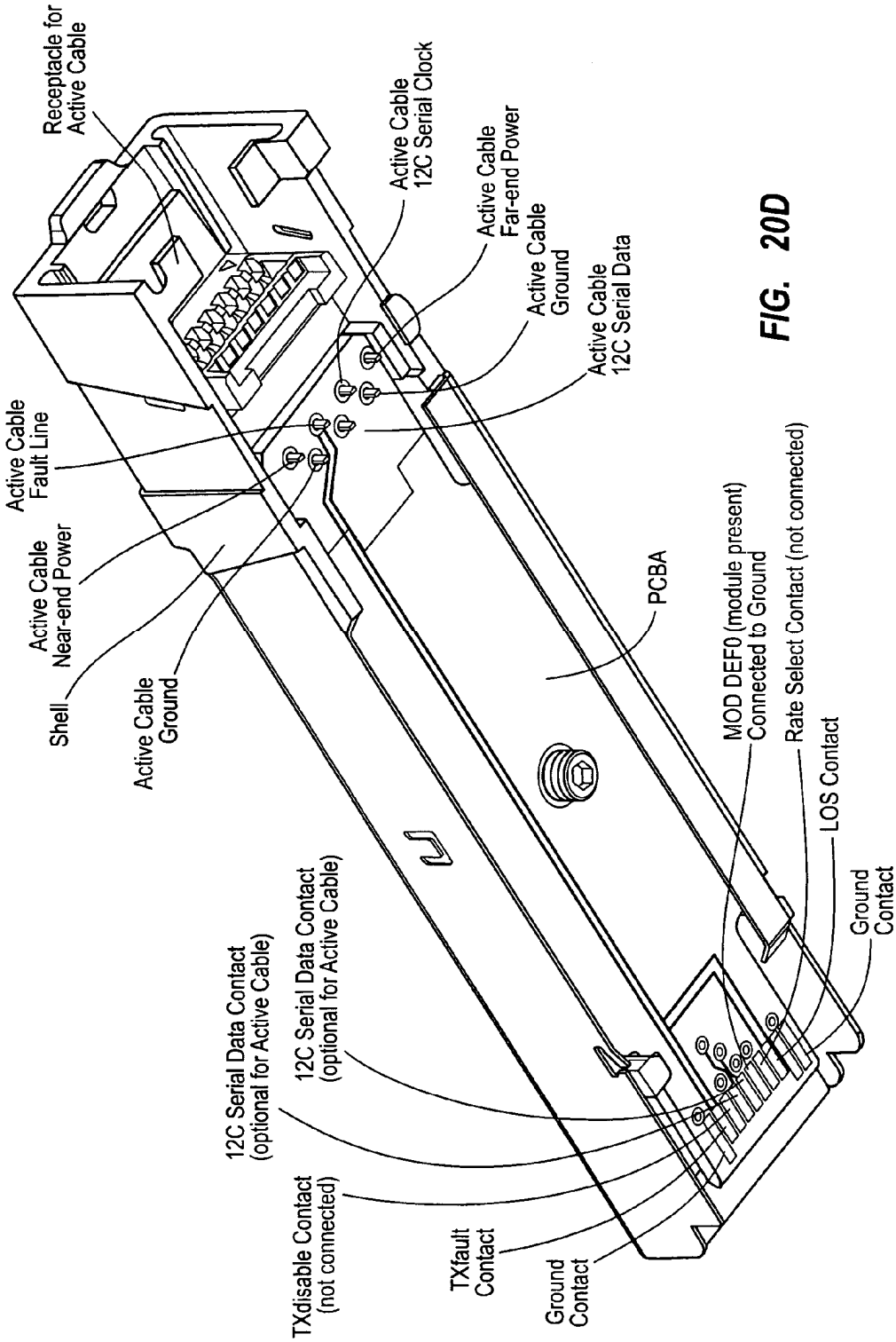
Receptacle for Active Cable
Active Cable 12C Serial Clock
Active Cable Far-end Power
Active Cable Ground
Active Cable 12C Serial Data
Active Cable Fault Line
Active Cable Near-end Power
Shell
Active Cable Ground
PCBA
MOD DEF0 (module present) Connected to Ground
Rate Select Contact (not connected)
LOS Contact
Ground Contact
12C Serial Data Contact (optional for Active Cable)
12C Serial Data Contact (optional for Active Cable)
TXdisable Contact (not connected)
TXfault Contact
Ground Contact

FIG. 20D

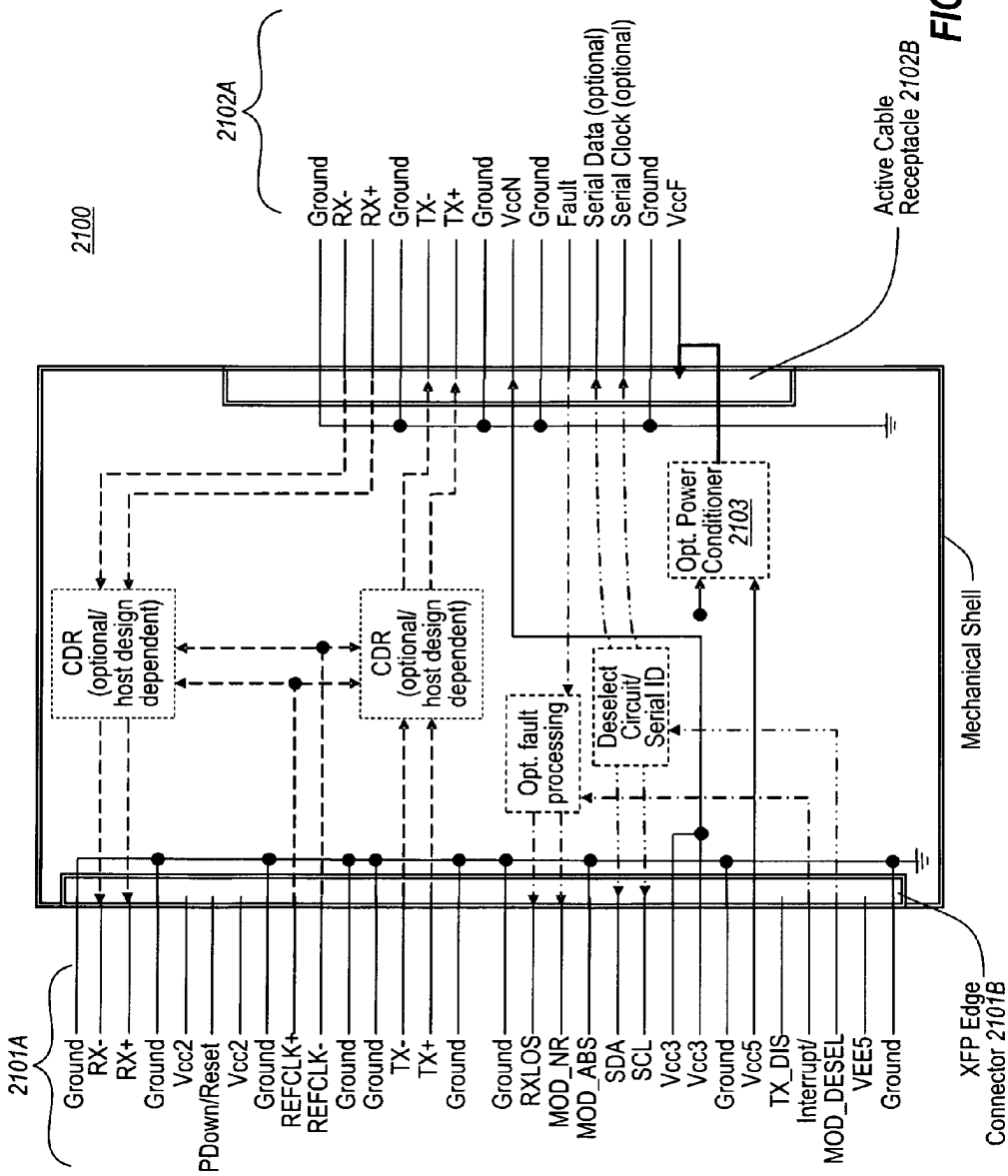
2100
2102A
Ground
RX-
RX+
Ground
TX-
TX+
Ground
VccN
Ground
Fault
Serial Data (optional)
Serial Clock (optional)
Ground
VccF
Active Cable Receptacle 2102B
CDR (optional/ host design dependent)
CDR (optional/ host design dependent)
Opt. Power Conditioner 2103
Opt. fault processing
Deselect Circuit/ Serial ID
Mechanical Shell
2101A
Ground
RX-
RX+
Ground
Vcc2
PDown/Reset
Vcc2
Ground
REFCLK+
REFCLK-
Ground
Ground
TX-
TX+
Ground
Ground
RXLOS
MOD_NR
MOD_ABS
SDA
SCL
Vcc3
Vcc3
Ground
Vcc5
TX_DIS
Interrupt/
MOD_DESEL
VEE5
Ground
XFP Edge Connector 2101B

FIG. 21

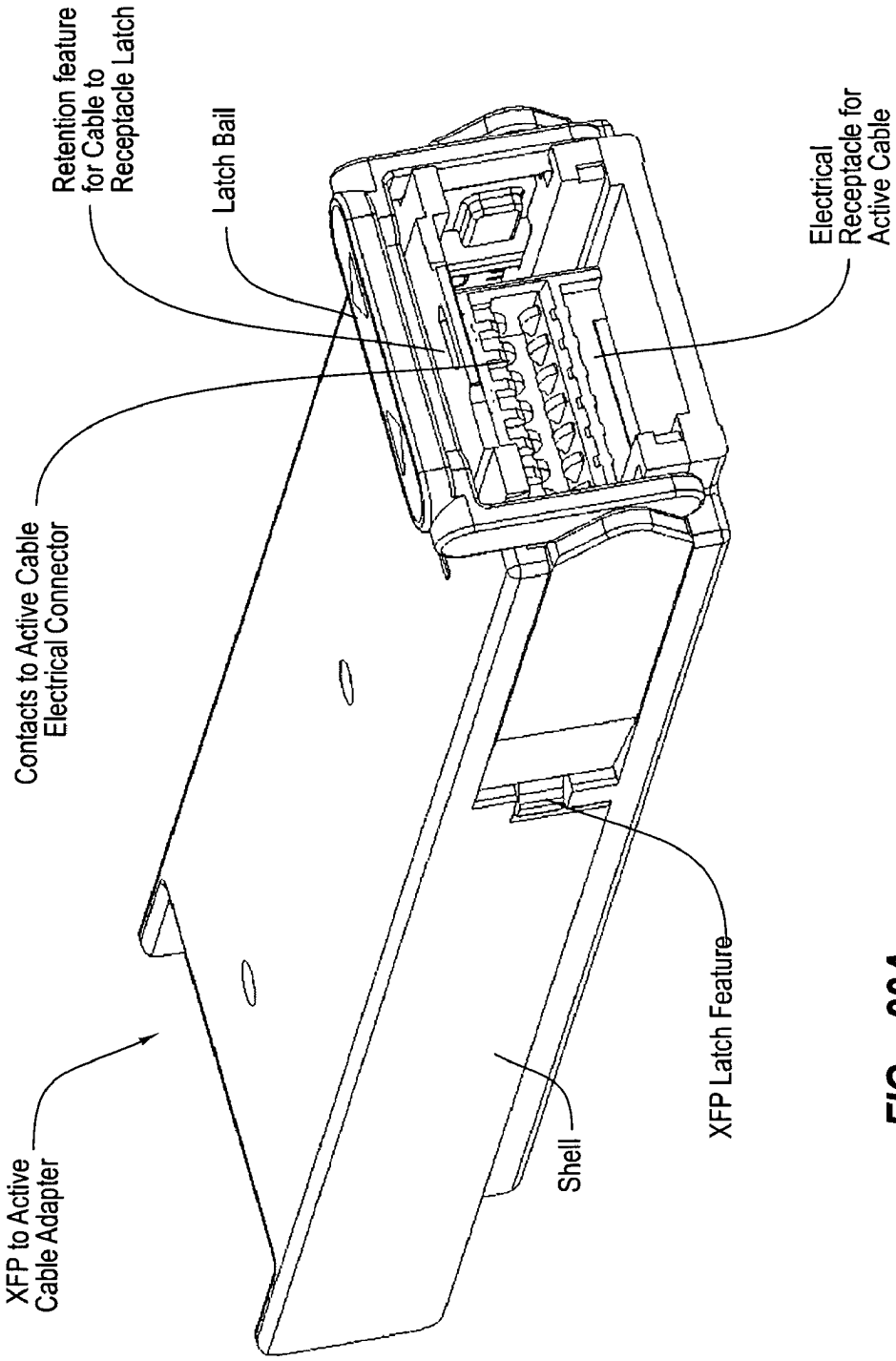
Retention feature for Cable to Receptacle Latch
Latch Bail
Contacts to Active Cable Electrical Connector
XFP to Active Cable Adapter
Shell
XFP Latch Feature
Electrical Receptacle for Active Cable

FIG. 22A

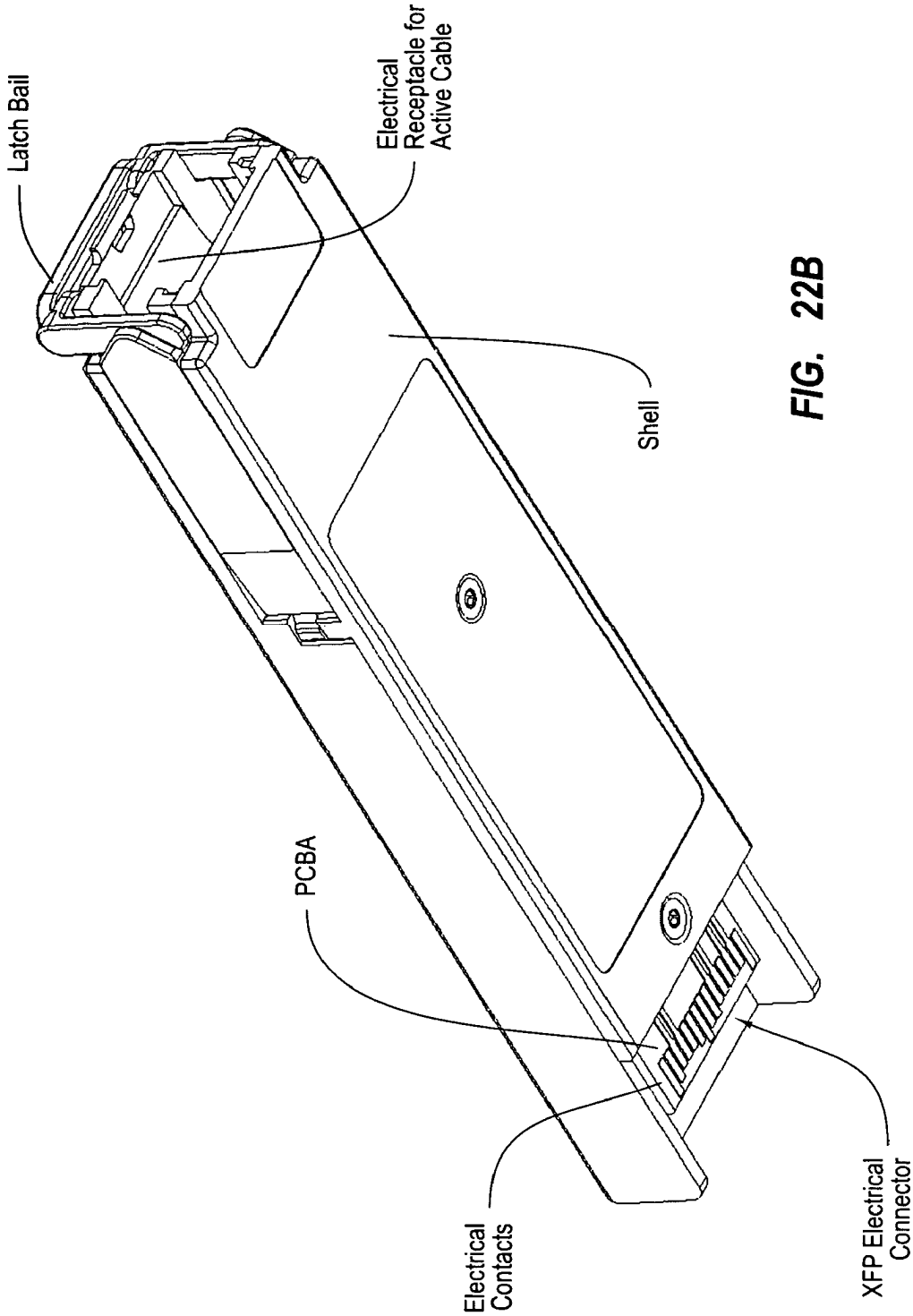
Latch Bail
Electrical Receptacle for Active Cable
Shell
PCBA
Electrical Contacts
XFP Electrical Connector

FIG. 22B

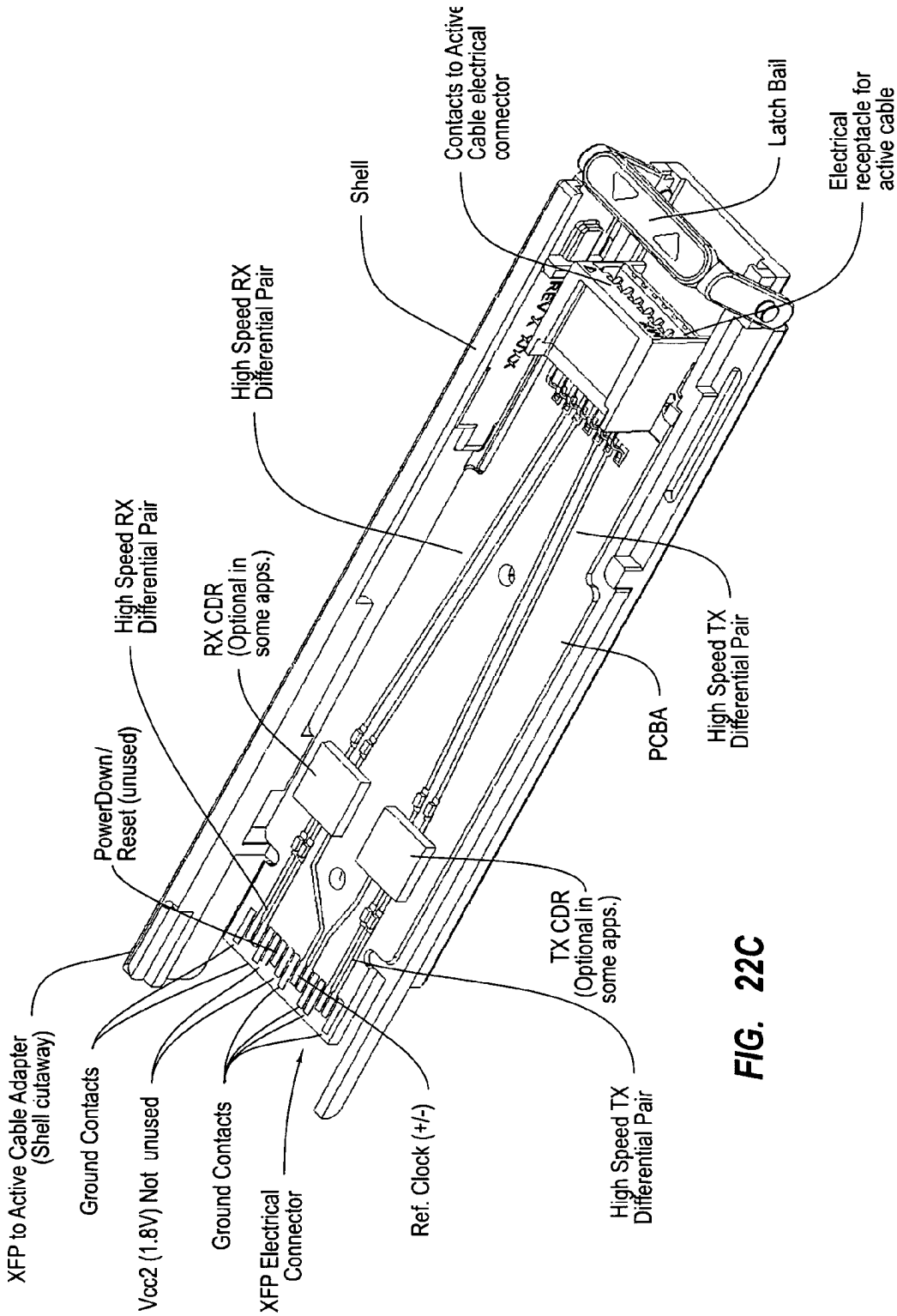
XFP to Active Cable Adapter (Shell cutaway)
Ground Contacts
Vcc2 (1.8V) Not unused
Ground Contacts
XFP Electrical Connector
PowerDown/ Reset (unused)
High Speed RX Differential Pair
RX CDR (Optional in some apps.)
High Speed RX Differential Pair
Shell
Ref. Clock (+/-)
TX CDR (Optional in some apps.)
High Speed TX Differential Pair
Contacts to Active Cable electrical connector
PCBA
High Speed TX Differential Pair
Latch Bail
Electrical receptacle for active cable

FIG. 22C

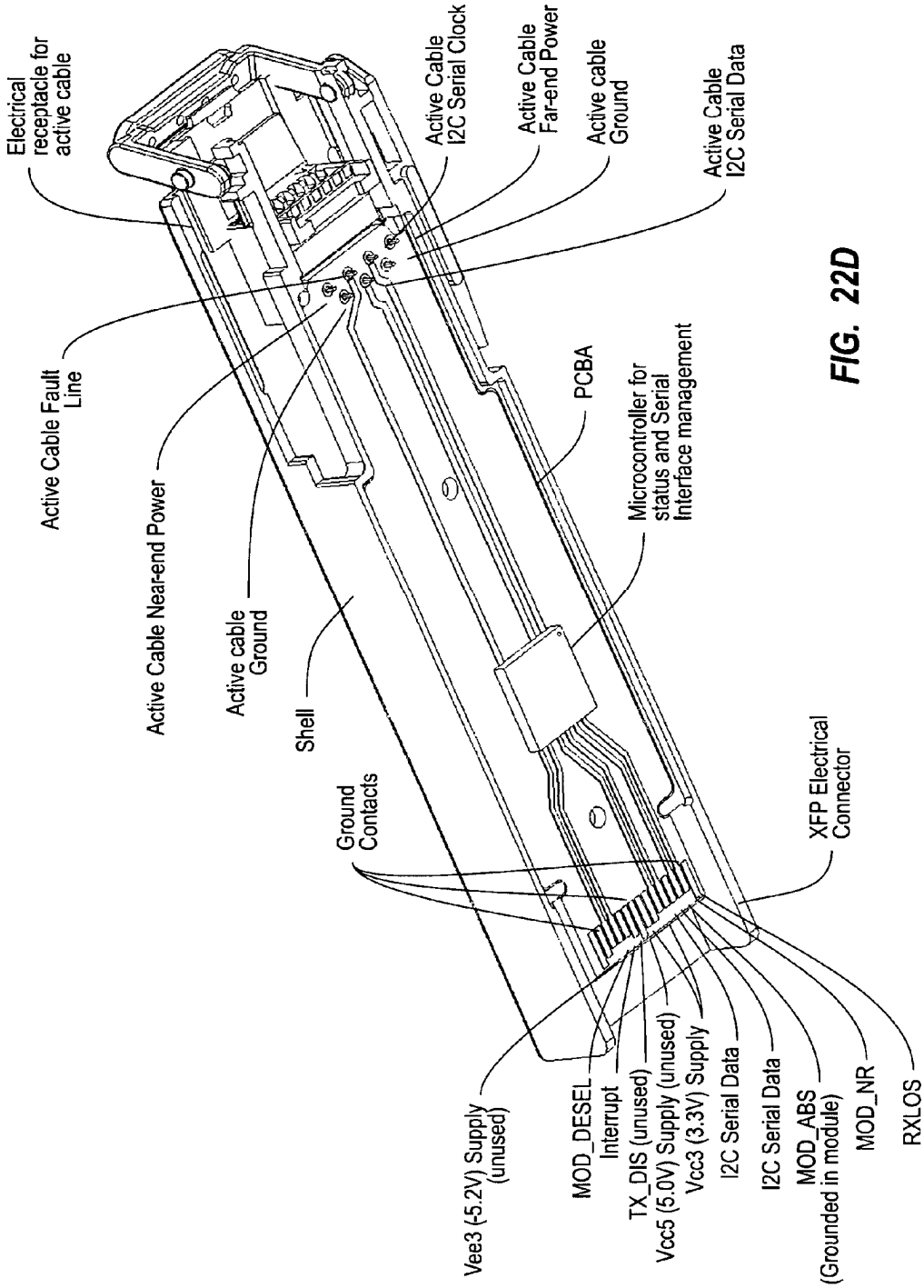
Electrical receptacle for active cable
Active Cable Fault Line
Active Cable Near-end Power
Active cable Ground
Shell
Ground Contacts
Active Cable I2C Serial Clock
Active Cable Far-end Power
Active cable Ground
Active Cable I2C Serial Data
PCBA
Microcontroller for status and Serial Interface management
XFP Electrical Connector
Vee3 (-5.2V) Supply (unused)
MOD_DESEL Interrupt
TX_DIS (unused)
Vcc5 (5.0V) Supply (unused)
Vcc3 (3.3V) Supply
I2C Serial Data
I2C Serial Data
MOD_ABS (Grounded in module)
MOD_NR
RXLOS

FIG. 22D

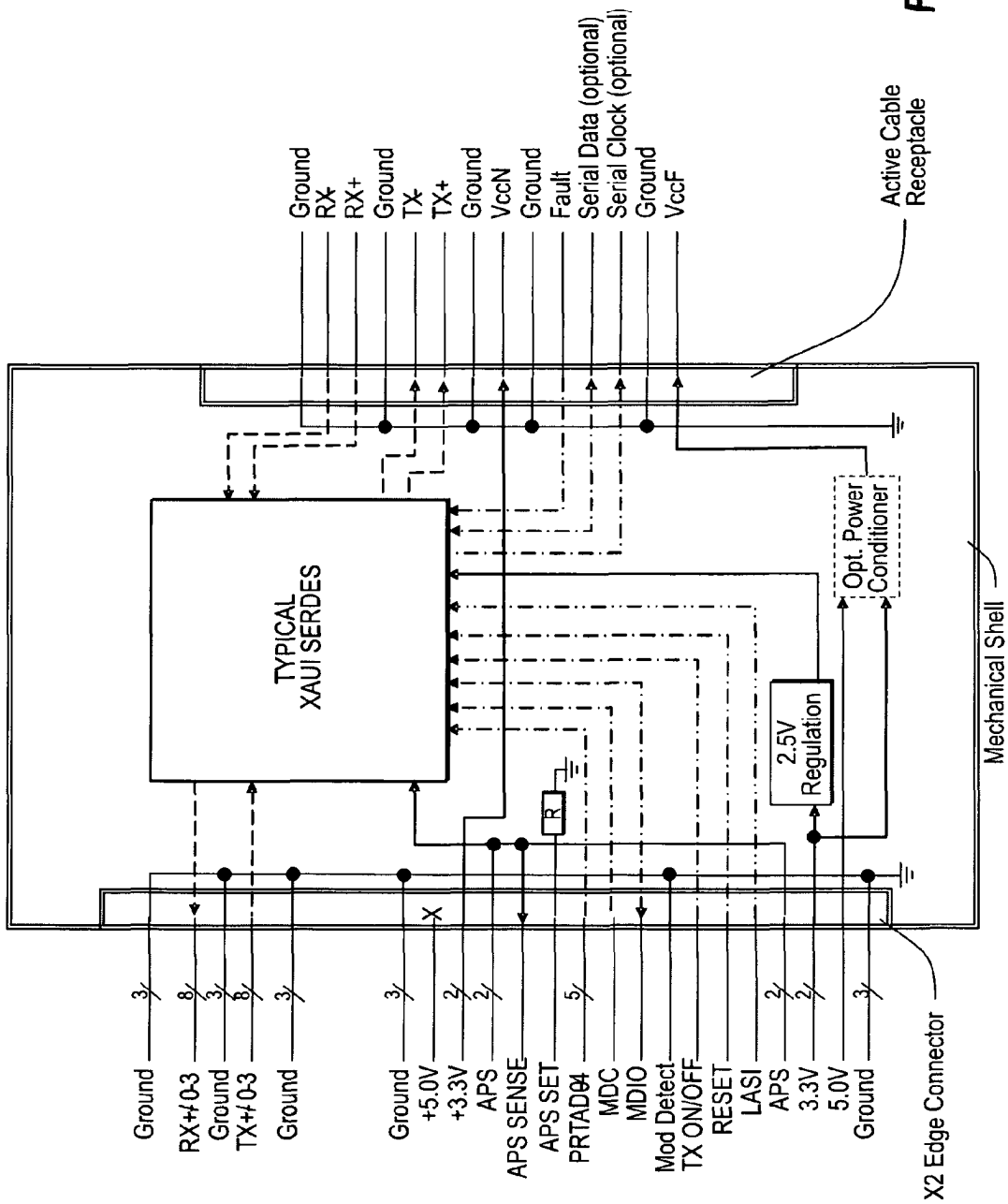
Ground
RX-
RX+
Ground
TX-
TX+
Ground
VccN
Ground
Fault
Serial Data (optional)
Serial Clock (optional)
Ground
VccF
Active Cable Receptacle
TYPICAL XAUI SERDES
Opt. Power Conditioner
2.5V Regulation
R
Mechanical Shell
Ground
RX+/-0-3
Ground
TX+/-0-3
Ground
Ground
+5.0V
+3.3V
APS
APS SENSE
APS SET
PRTAD0-4
MDC
MDIO
Mod Detect
TX ON/OFF
RESET
LASI
APS
3.3V
5.0V
Ground
X2 Edge Connector

FIG. 23

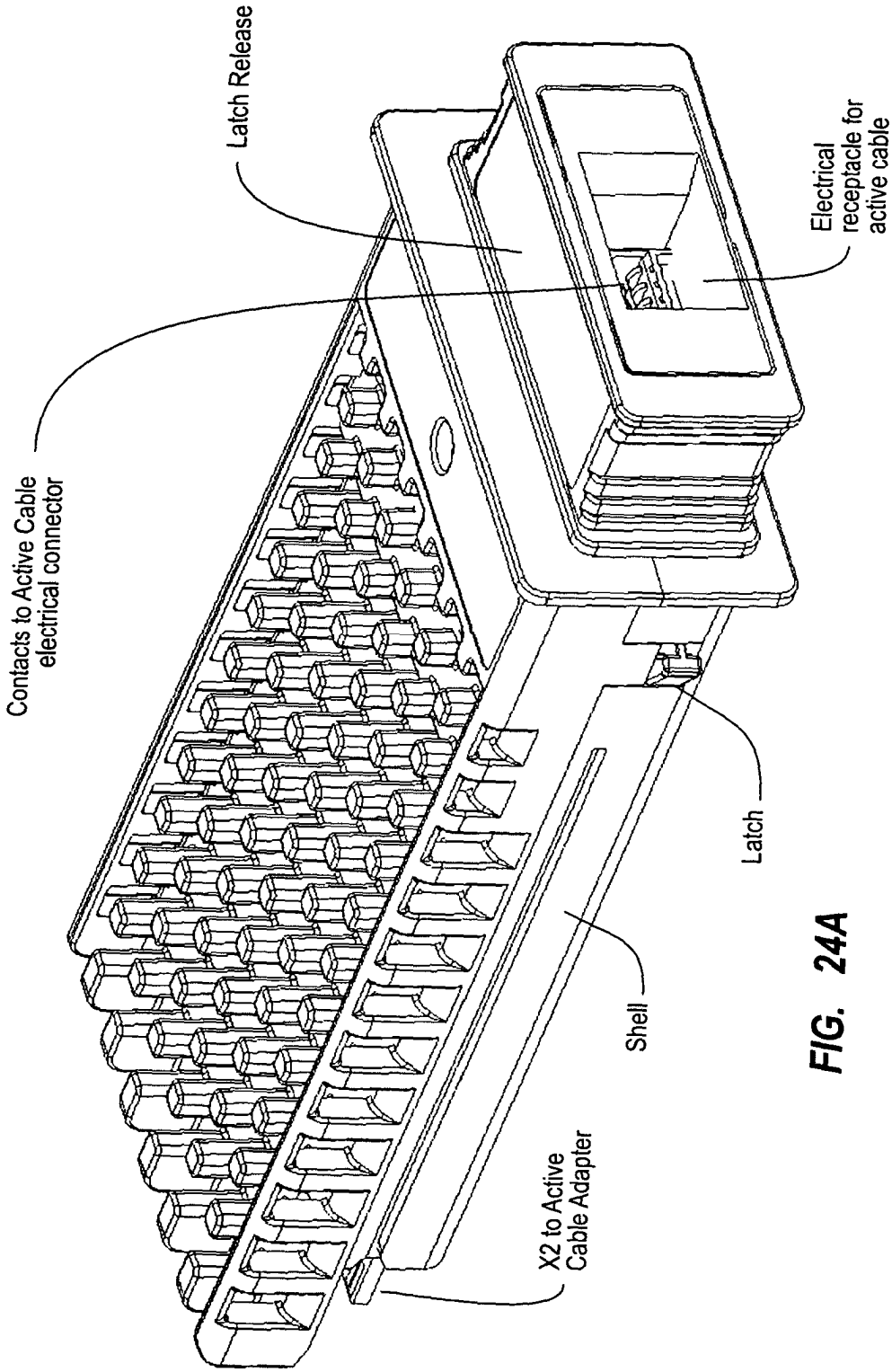
Latch Release
Contacts to Active Cable electrical connector
Electrical receptacle for active cable
Latch
Shell
X2 to Active Cable Adapter

FIG. 24A

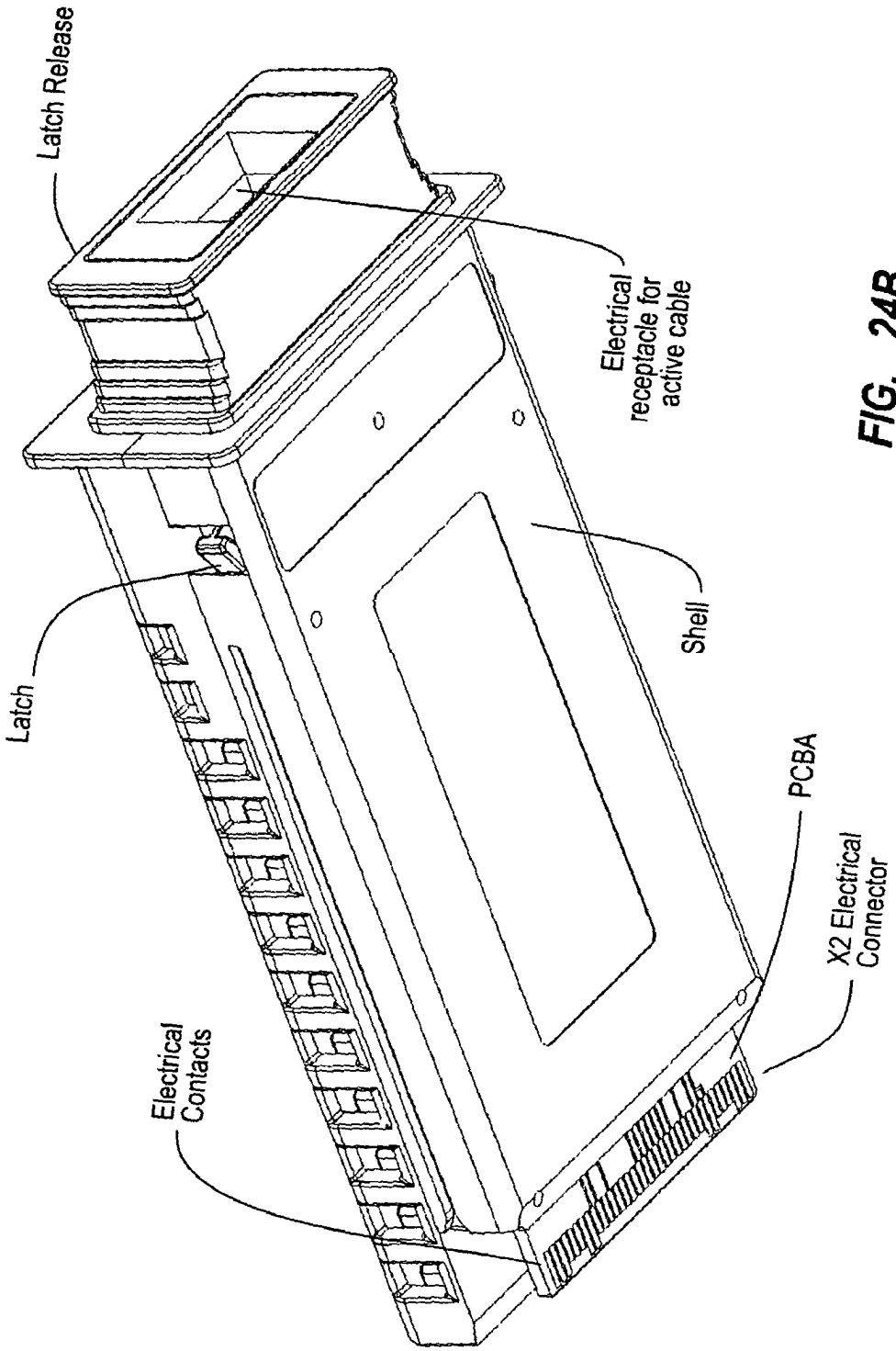
Latch Release
Electrical receptacle for active cable
Shell
Latch
PCBA
X2 Electrical Connector
Electrical Contacts

FIG. 24B

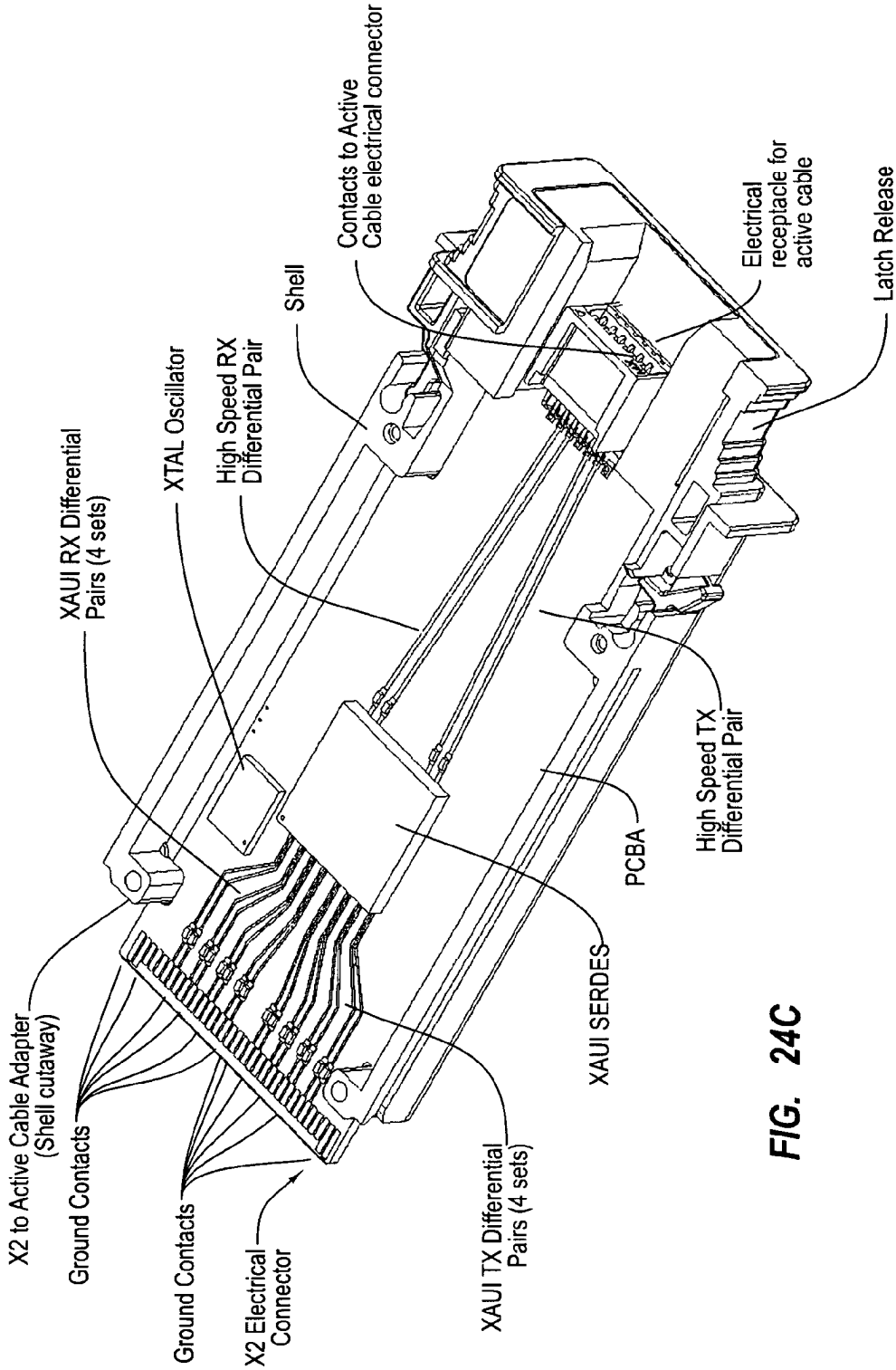
X2 to Active Cable Adapter (Shell cutaway)
Ground Contacts
Ground Contacts
X2 Electrical Connector
XAUI RX Differential Pairs (4 sets)
XTAL Oscillator
High Speed RX Differential Pair
Shell
Contacts to Active Cable electrical connector
XAUI TX Differential Pairs (4 sets)
XAUI SERDES
PCBA
High Speed TX Differential Pair
Electrical receptacle for active cable
Latch Release

FIG. 24C

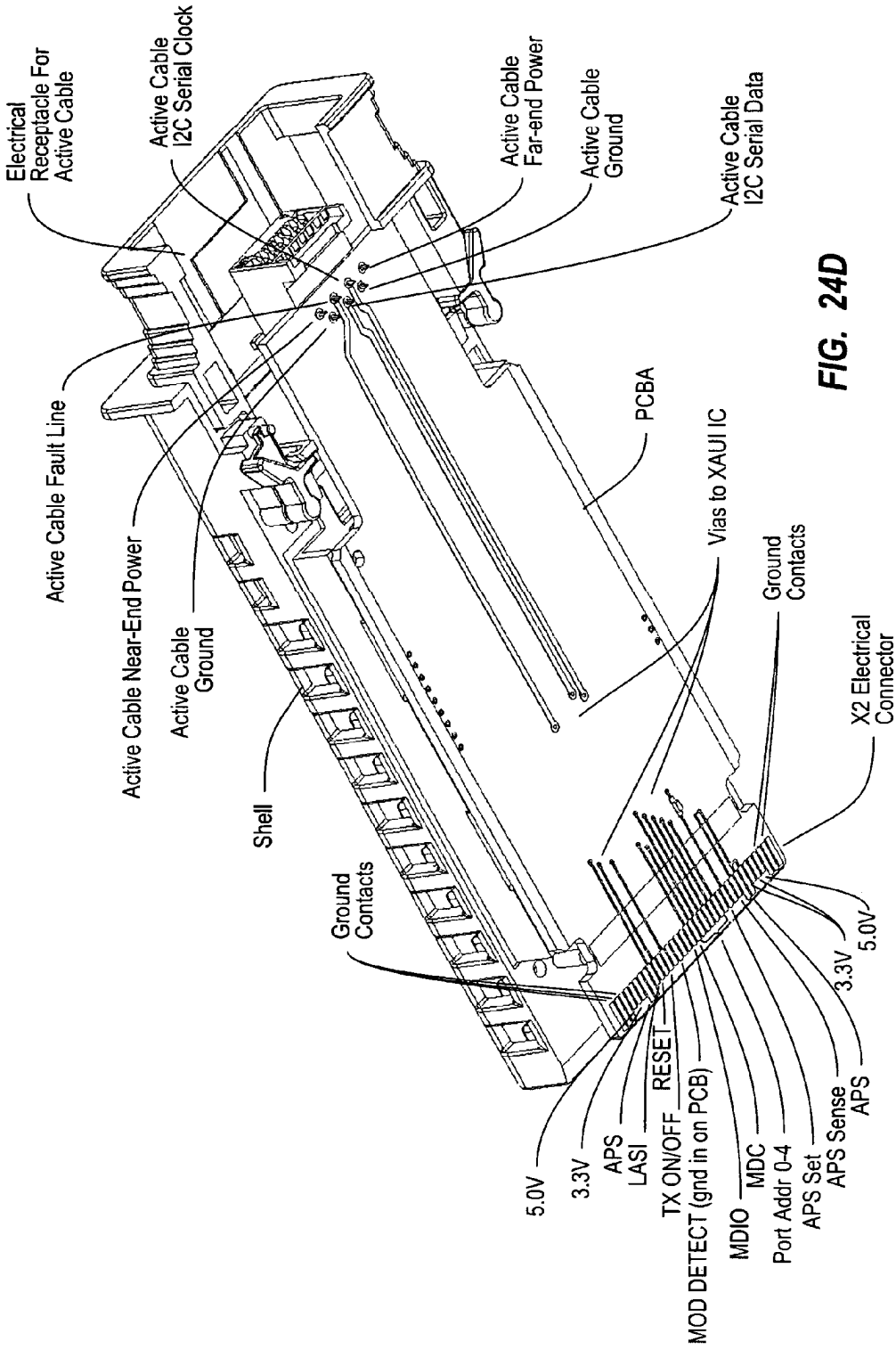
Electrical Receptacle For Active Cable
Active Cable I2C Serial Clock
Active Cable Far-end Power
Active Cable Ground
Active Cable I2C Serial Data
Active Cable Fault Line
Active Cable Near-End Power
Active Cable Ground
Shell
Ground Contacts
PCBA
Vias to XAUI IC
Ground Contacts
X2 Electrical Connector
5.0V
3.3V
APS
LASI
RESET
TX ON/OFF
MOD DETECT (gnd in on PCB)
MDIO
MDC
Port Addr 0-4
APS Set
APS Sense
APS
3.3V
5.0V

FIG. 24D

ACTIVE OPTICAL CABLE WITH INTEGRATED CONTROL FEATURES

REFERENCE TO RELATED APPLICATIONS

This application is a continuation of U.S. patent application Ser. No. 11/401,803 filed Apr. 10, 2006, the contents of which are hereby incorporated by reference herein.

BACKGROUND

Communication technology has transformed our world. As the amount of information communicated over networks has increased, high speed transmission has become ever more critical. High speed communications often rely on the presence of high bandwidth capacity links between network nodes. There are both copper-based solutions and optical solutions used when setting up a high bandwidth capacity link. A link may typically comprise a transmitter that transmits a signal over a medium to a receiver, either in one direction between two network nodes, or bi-directionally. An optical link might include, for example, an optical transmitter, a fiber optic medium, and an optical receiver for each direction of communication. In duplex mode, an optical transceiver serves as both an optical transmitter that serves to transmit optically over one fiber to the other node, while receiving optical signals over another fiber (typically in the same fiber-optic cable).

Presently, communication at more than 1 gigabit per second (also commonly referred to as "1 G") links are quite common. Standards for communicating at 1 G are well established. For instance, the Gigabit Ethernet standard has been available for some time, and specifies standards for communicating using Ethernet technology at the high rate of 1 G. At 1 G, optical links tend to be used more for longer spanning links (e.g., greater than 100 meters), whereas copper solutions tend to be used more for shorter links due in large part to the promulgation of the 1000 Base-T standard, which permits 1 G communication over standard Category 5 ("Cat-5") unshielded twisted-pair network cable for links up to 100 m.

More recently, high-capacity links at 10 gigabits per second (often referred to in the industry as "10 G") have been standardized. As bandwidth requirements increase, potential solutions become more difficult to accomplish, especially with copper-based solutions. One copper-based 10 G solution is known as 10 GBASE-CX4 (see IEEE Std 802.3ak-2004, "Amendment: Physical Layer and Management Parameters for 10 Gb/s Operation Type 10 GBASE-CX4" Mar. 1, 2004), which accomplishes the higher bandwidth, despite the use of copper. 10 GBASE-CX4 uses a cable, which includes 4 shielded different pairs carrying a quarter of the bandwidth in each direction, for a total of 8 differential copper pairs. This cable is quite bulky (typically about 0.4" or 10 mm in diameter) and expensive to make and cannot be terminated in the field (as can CAT-5 for example). Furthermore, this copper-based 10 G solution is limited to distances of about 15 m without special efforts. Alternative copper-based 10 G solutions are being developed and standardized but are likely also to require significant power consumption. The primary example is known as 10 GBASE-T under development in the IEEE (see IEEE draft standard 802.3an, "Part 3: Carrier Sense Multiple Access with CollisionDetection (CSMA/CD) Access Method and Physical Layer Specifications Amendment: Physical Layer and Management Parameters for 10 Gb/s Operation, Type 10 GBASE-T" 2006). This standard uses CAT5e or CAT6A unshielded twisted pair cable for distances to 55 m and 100 m respectively. However it is expected that because of the extremely complex signal processing required, this standard will require circuitry with very high power dissipation, initially as high as 8-15 Watts (per port and thus twice this per link). A lower power variant which only achieves 30 m on CAT6A cable is still expected to be more than 4 Watts per port. These high power levels represent both a significant increase in operating costs and perhaps more importantly, limitations on the density of ports which can be provided on a front panel. For example, power dissipations of 8-15 W could limit port density to 8 ports or less in the space of a typical 1 U rack unit, whereas 1000BASE-T and 1 G optical interfaces such as the SFP transceiver can provide up to 48 ports in the same space. Nevertheless, because of the cost of present day optical solutions at 10 G, there remains interest in this copper solution.

At the present stage, those setting up the high-bandwidth link will often weigh the pros and cons of using a copper-based solution versus an optical solution. Depending on the results of that decision, the systems will be set up with an electrical port if they decided to proceed with a copper-based solution, or an optical port (often more specifically a cage and connector to receiver a standard mechanical form factor optical transceiver such as the SFP) if they decided to proceed with an optical solution.

BRIEF SUMMARY

Although not required, embodiments of the present invention relate to an active cable that is configured to communicate over much of its length using one or more optical fibers, and that includes an integrated electrical connector at least one end.

In one embodiment, an integrated cable includes a first optical fiber within the integrated cable, the first optical fiber having a first end and a second end. The integrated cable further includes a first electrical connector integrated with the integrated cable, the first electrical connector configured to connect with a first electrical port external to the integrated cable such that when connected to the first electrical port the first electrical connector is configured to receive a first electrical signal and provide the first electrical signal to a first electro-optical transducer. The first electro-optical transducer disposed within the integrated cable and coupled to the first end of the first optical fiber such that when the first electro-optical transducer receives the first electrical signal and converts the first electrical signal into a first optical signal the first optical signal is coupled to the first end of the first optical fiber. The integrated cable further includes a second electrical connector integrated with the integrated cable, the second electrical connector configured to connect with a second electrical port external to the integrated cable. The integrated cable further includes a first opto-electrical transducer disposed within the integrated cable and coupled to a second end of the first optical fiber such that when the first opto-electrical transducer receives the first optical signal from the second end of the first optical fiber the first opto-electrical transducer converts the first optical signal to a second electrical signal and provides the second electrical signal to the second electrical connector such that when connected to the second electrical port the second electrical connector is configured to provide the second electrical signal to the second electrical port. Finally, the integrated cable further includes a circuit disposed in the integrated cable, the circuit configured to provide pre-emphasis of the first or second electrical signals. In another embodiment the circuit configured to provide pre-emphasis of the first or second electrical signals is replaced or

combined with circuitry configured to provide equalization of the first or second electrical signals within the integrated cable

BRIEF DESCRIPTION OF THE DRAWINGS

The appended drawings are used in order to more particularly describe embodiments of the present invention. Understanding that these drawings depict only typical embodiments of the invention and are not therefore to be considered to be limiting of its scope, the embodiments will be described and explained with additional specificity and detail through the use of the accompanying drawings in which:

FIG. **1** illustrates a fully duplex electrical-to-electrical cable;

FIG. **2**A illustrates a fully duplex electrical-to-optical cable;

FIG. **2**B illustrates a three cable link in which there are electrical-to-optical cables on each end of the sequence, and a fully optical cable disposed therebetween;

FIG. **2**C illustrates an electrical-to-optical cable in which the optical end is coupled to an external optical transceiver;

FIG. **3**A illustrates two electrical-to-electrical cables coupled to a cable plug end adaptor;

FIG. **3**B illustrates more of the mechanical aspects of the cable plug end adaptor of FIG. **3**A;

FIG. **4** illustrates two electrical-to-electrical cables with internal power connections coupled to a cable plug end adaptor;

FIG. **5**A illustrates an electrical-to-electrical male-to-female cable;

FIG. **5**B illustrates a three cable link that incorporates several instances of the cable of FIG. **5**A;

FIG. **6**A illustrates the configuration of FIG. **3**A, except with retiming incorporated;

FIG. **6**B illustrates the configuration of FIG. **4**, except with retiming incorporated;

FIG. **7**A illustrates the configuration of FIG. **5**A, except with retiming incorporated;

FIG. **7**B illustrates the configuration of FIG. **5**B, except with retiming incorporated;

FIG. **8**A illustrates a passive electrical-to-electrical copper cable that includes an electrical connector that is structured the same as an electrical connector of the electrical-to-electrical optical cable of FIG. **1** or FIG. **2**A;

FIG. **8**B illustrates a view of an example cross-section of the copper cable of FIG. **8**A;

FIG. **9** illustrates an active electrical-to-electrical copper cable that includes an electrical connector that is structured the same as an electrical connector of the electrical-to-electrical optical cable of FIG. **1** or FIG. **2**A;

FIG. **10** illustrates an active electrical-to-electrical copper cable that includes a power transmission line and that includes an electrical connector that is structured the same as an electrical connector of the electrical-to-electrical optical cable;

FIG. **11** illustrates an active electrical-to-electrical copper cable that includes a mechanism for transmitting power of the signal carrying lines, and that includes an electrical connector that is structured the same as an electrical connector of the electrical-to-electrical optical cable;

FIG. **12**A illustrates an active copper cable transmitter integrated circuit;

FIG. **12**B illustrates an active copper cable receiver integrated circuit;

FIG. **13**A illustrates a three cable link that includes electrical-to-electrical copper cables on the ends and an optical cable with electrical connectors in the middle, in which power is supplied to the electrical connections in the optical cable using dedicated power transmission lines;

FIG. **13**B illustrates a three cable link that includes electrical-to-electrical capper cables on the ends and an optical cable with electrical connectors in the middle, in which power is supplied to the electrical connections in the optical cable using the signal carrying lines of the copper cables;

FIG. **14**A illustrates a dual link electrical-to-electrical optical cable;

FIG. **14**B illustrates a dual link electrical to two single link electrical cable;

FIG. **15**A illustrates an example 11 pin arrangement of a single link cable;

FIG. **15**B illustrates an example 9 pin arrangement of a single link cable;

FIG. **15**C illustrates an example 20 pin arrangement of a single link cable;

FIG. **15**D illustrates an example 20 pin arrangement of a dual link cable;

FIG. **15**E illustrates an example 22 pin arrangement of a dual link cable;

FIG. **16** illustrates a schematic of the internals of one end of a single link cable including the electrical connector;

FIG. **17**A schematically illustrates the internals of one end of a dual link cable including the electrical connector;

FIG. **17**B illustrates another perspective view of the electrical connector end of FIG. **17**A;

FIG. **17**C illustrates yet another perspective view of the electrical connector end of FIG. **17**A;

FIG. **18** illustrates a perspective view of an electrical end a single link cable in accordance with the principles of the present invention;

FIG. **19** illustrates an SFP to active cable adaptor electrical conversion mapping component;

FIG. **20**A illustrates a first view of an SFP to active cable adaptor in accordance with one embodiment of the present invention;

FIG. **20**B illustrates another perspective view of the adaptor of FIG. **20**A;

FIG. **20**C illustrates yet another perspective view of the adaptor of FIG. **20**A;

FIG. **20**D illustrates a final perspective view of the adaptor of FIG. **20**A;

FIG. **21** illustrate an XFP to active cable adaptor electrical conversion mapping component;

FIG. **22**A illustrates a first view of an XFP to active cable adaptor in accordance with one embodiment of the present invention;

FIG. **22**B illustrates another perspective view of the adaptor of FIG. **22**A;

FIG. **22**C illustrates yet another perspective view of the adaptor of FIG. **22**A;

FIG. **22**D illustrates a final perspective view of the adaptor of FIG. **22**A;

FIG. **23** illustrate an X2 to active cable adaptor electrical conversion mapping component;

FIG. **24**A illustrates a first view of an X2 to active cable adaptor in accordance with one embodiment of the present invention;

FIG. **24**B illustrates another perspective view of the adaptor of FIG. **24**A;

FIG. **24**C illustrates yet another perspective view of the adaptor of FIG. **24**A; and

FIG. **24**D illustrates a final perspective view of the adaptor of FIG. **24**A.

DETAILED DESCRIPTION OF THE PREFERRED EMBODIMENTS

Embodiments of the present invention relate to the use of a communication cable that is exposed at least at one end using an electrical connection, while communicating over much of its length using optical fiber. Thus, those designing or selecting networking equipment or administrating network nodes need not choose a copper-based solution or an optical solution in communicating over a network. Instead, the network node need only have an electrical port of some type to thereby support either copper-based communication or optical communication. In addition to network applications, such a cable can support point to point high speed serial connections such as the transmission of serialized video data from source to a display. The communication over the optical fiber may be high speed and suitable for 10 G applications and higher. As will described below, cable designs which are purely electrical but mechanically and electrically interoperate with the optical cables described herein may be included as part of a complete system to provide the most effective solutions over the widest range of applications.

FIG. **1** illustrates an integrated cable **100** that has electrical connections **111** and **121** at both ends. Each electrical connection is sized and configured to connect to a corresponding electrical port at each network node. For example, electrical connector **111** is configured to connect to electrical port **112** at one network node, while the electrical connector **121** is configured to connect to the electrical port **122** at the other network node. From the external connection viewpoint, it is as though the cable is entirely an electrical cable.

However, upon closer examination of the cable **100** of FIG. **1**, communication over at least part of the cable length is actually accomplished via optical fibers. Each end of the cable **100** has optics that support duplex-mode optical communications. Specifically, the optics at each end of the cable **100** include a transmit optical sub-assembly (TOSA) for transmission of an optical signal over one optical fiber and a receive optical sub-assembly (ROSA) for receipt of an optical signal from another optical fiber. Integrated circuits to drive the transmitting optics and to receive the detected signal are included. These ICs may be outside the TOSA or ROSA or may be integrated directly in their design. Though the cable **100** is illustrated as supporting duplex-mode in which optical communication occurs in either direction, the cable may also perform communication in one direction consisting of a single transmitter at one end and a single receiver at the other.

Referring in further detail to FIG. **1**, the cable **100** includes two optical fibers **131** and **132** integrated within the cable **100**. When an electrical signal is applied to the appropriate connections of the electrical connector **121** (e.g., through the electrical port **122**), those electrical signals are converted by a laser driver and TOSA **123** (or more specifically by an electro-optical transducer within the TOSA **123**) to a corresponding optical signal. As noted, the laser driver may be included within the TOSA. The optical signal is transmitted over optical fiber **131** to ROSA **114**. The ROSA **114** (or more specifically, an opto-electronic transducer within the ROSA **114**) converts the optical signal received from the optical fiber **131** into a corresponding electrical signal. Typically the optical transducer would consist of a PIN detector and a preamplifier Integrated Circuit (IC), usually with a transimpedance amplifier front-end design. A limiting amplifier may also be integrated with the preamplifier or provided separately. The electrical signal is applied on the appropriate connections of the electrical connector **111**, whereupon it is provided to the electrical port **112**. While the cable **100** may be of any length, in one embodiment, the length is from 1 to 100 meters. The cable may support high speed communication range between 1 to 10 gigabits per second and beyond.

If the principles of the present invention are to be applied to bi-directional communication, when an electrical signal is applied to the appropriate connections of the electrical connector **111** (e.g., through the electrical port **112**), those electrical signals are converted by a laser driver and TOSA **113** (or more specifically by an electro-optical transducer within the TOSA **113**) to a corresponding optical signal. Once again, the laser driver may (but need not) be integrated within the TOSA. The optical signal is transmitted over optical fiber **132** to ROSA **124**. The ROSA **124** (or more specifically, an opto-electronic transducer within the ROSA **124**) converts the optical signal received from the optical fiber **132** into a corresponding electrical signal. The electrical signal is applied on the appropriate connections of the electrical connector **121**, whereupon it is provided to the electrical port **122**. The cable **100** may additionally include a protective coating **133** which protects the optical fibers, the optics and portions of the electrical connectors. Finally, though not shown in the figure, the fiber optic cable would typically include some form of strength member such as Kevlar yarn.

In principle, any type of optical fiber (single mode or multimode) could be used with the appropriate TOSA and ROSA designs. In some embodiments, however, the use of multimode fiber for links of 100 m and less with shortwave (~850 nm) VCSEL sources may be desirable. There are several important types of multimode fiber worth considering and distinguishing which is preferred in different situations. Of course, as the relative costs and alternatives associated with each of the multimode fiber solutions changes over time, the considerations referred to below may also change.

Presently, a quite cost effective choice for connections at least to 30 meters would be a type of multimode fiber generically referred to as OM2 which has a core and cladding diameter of about 50 and 125 microns respectively and has a minimum overfilled bandwidth (OFL) of about 500 MHz·km. While links can be constructed using this fiber for distances beyond 30 meters, the fiber would start to add a significant amount of jitter to the link (discussed generally below) which may be an undesirable tradeoff.

For links longer than about 30 meters, fiber with a tighter tolerance on the core design but with identical mechanical dimensions may be desirable. In particularly, a class of fiber generally known as OM3 which has a minimum OFL of 2000 MHz·km is available, and would provide very small signal impairment to a distance of 100 meters or more (and it has conventionally been used for links up to perhaps 300 meters).

Those skilled in the arts will recognize that the distance at which to use a certain type of fiber will be determined by many factors and may result in a tradeoff point significantly different than 30 meters.

An important new type of multimode fiber made with organic polymer (plastic) material may prove extremely cost effective for these applications because of the simplicity of the termination of a fiber itself. Plastic fibers have been available for many years but have generally required very short wavelength sources (about 650 nm) and because of their simple step index core design have bandwidths orders of magnitude too low for 1 G to 10 G applications. Recently however, designs have been introduced which substitute fluorine for hydrogen in the polymer structure reducing attenuation at longer wavelength such as 850 nm. More importantly,

graded index core designs have been realized which provide OFL bandwidths of 300 MHz·km or more which is sufficient for links of 20 meters or longer.

Of course, the opto-electronic conversion process and the electro-optic conversion process require power in order to convert between optical and electrical energy. Thus, the electrical connectors supply power from the host at least one end of the cable **133** to power the opto-electronic conversion. The power connection may be, for example, a 3.3 volt power connection. In FIG. **1**, for example, the electrical port **112** is illustrated as supplying Power/Gnd connections for conveying electrical power from the host to electrical connector **111**.

Thus, conveyance of information is accomplished largely by means of an optical signal, while providing electrical connections on both ends of the cable. The purchaser of the cable need not even be aware that the cable is an optical cable. In fact, a copper cable could be provided for particularly short links (perhaps 1 to 5 meters) which emulates the cable **100** of FIG. **1**, embodiments of which are described further below with respect to FIGS. **8**A through **13**B.

While a single cable assembly linking two pieces of equipment is probably the simplest and lowest cost configuration in terms of hardware and perhaps preferred for shorter links (for example, less than 10 meters), it may prove inconvenient to install for longer connections (for example, more than 30 meters). For longer distances, connections of multiple cables may be more convenient. In conventional optical links, for example, it is common for a longer length of cable to be terminated at each end at a patch panel consisting of one or more cable plug end connectors. A short connection is made from the optical ports on network equipment at each end of the link to the corresponding patch panel using a relatively short (from 1 to 5 meter) patch cable. In other cases, even more complicated connections are used involving as many as 4 to 6 connections.

While some embodiments of potential applications of the present invention could be served by a single cable, variations which would allow the connection of at least three cables would be of great utility. There are several possible methods by which the present cable may be interconnected to other such cables or other variants to be described, all of which being encompassed within the principles of the present invention. The various embodiments have different relative advantages.

FIG. **2**A illustrates an integrated cable **200** in accordance with another embodiment of the invention in which the cable **200** may be used as one link in a multiple link connection. The integrated cable **200** of FIG. **2**A is similar to the integrated cable **100** of FIG. **1**, except that the integrated cable **200** has an electrical connector **211** on only one end of the cable for connection with the electrical port **212**, and an optical connector **221** on the other end of the cable. The optical connector **221** is configured to permit the cable to receive optical signals from other optical cables through optical fiber **231** using connectors **221** and **222**, and transmit optical signals from optical fiber **232** through the other optical cable also using connectors **221** and **222**.

In the illustrated embodiment of FIG. **2**A, the optical connector **221** is illustrated as a standard LC optical connector (see ANSI/TIA/EIA 604-10. "FOCIS-10 Fiber Optic Connector Intermateability Standard" October 1999 for more information concerning the standard LC optical connector). However, any optical connection may suffice including, but not limited to, SC optical connectors (see IEC61754-4 "Fiber optic connector interface Part 4: Type SC connector family" Ed 1.2, 2002-2003 for more information concern the standard SC optical connector) as well as other optical connections, whether now existing or to be developed in the future. While the cable **200** may be of any length, in one embodiment, the length is from 1 to 5 meters.

The cable illustrated in FIG. **2**A may be used in a 3 cable configuration as shown in FIG. **2**B where an electrical to optical cable **200**A is connected to an optical cable **201** and then to a second optical to electrical cable **200**B. The electrical to optical cables and optical to electrical cables may be referred to herein as "E-O" cables. In one embodiment, the E-O cables **200**A and **200**B are each instances of the cable **200** illustrated and described with respect to FIG. **2**A. The optical cable **201** may, but need not, be a standard optical cable.

Thus, electrical signals received from electrical port **212**B of the right host in FIG. **2**B may be received by the electrical connector **211**B of the E-O cable **200**B, converted into an optical signal using the TOSA and associated laser driver of the E-O cable **200**B, pass through the E-O optical interface **232**B defined by the connection between optical connectors **221**B and **231**B, pass through the optical cable **201**, pass through the optical interface **232**A defined by the connection between optical connectors **231**A and **221**A, through the E-O cable **200**A as an optical signal, to finally be received by the ROSA of the E-O cable **200**A, whereupon the corresponding electrical signal is received by the electrical port **212**A of the left host through the electrical connection **211**A.

Conversely, electrical signals received from electrical port **212**A of the left host in FIG. **2**B may be received by the electrical connector **211**A of the E-O cable **200**A, converted into an optical signal using the TOSA and associated laser driver of the E-O cable **200**A, pass through the E-O optical interface **232**A defined by the connection between optical interface **221**A and **231**A, pass through the optical cable **201**, pass through the optical interface **232**B defined by the connection between optical connectors **231**B and **221**B, through the E-O cable **200**B as an optical signal, to finally be received by the ROSA of the E-O cable **200**B, whereupon the corresponding electrical signal is received by the electrical port **212**B of the right host through the electrical connection **211**B. In alternative embodiments, the multi-cable link illustrated in FIG. **2**B may be extended to consist of multiple lengths of standard optical cable to extend the link to beyond 3 cables.

The E-O cable **200** could have specifications on the optical input and output such as the minimum and maximum transmitted modulated power and the minimum and maximum acceptable receive power. These could either be custom specifications to enable a particular range of links with given fiber types. Alternatively, the optical interface of this cable could comply with one or more existing or future optical standards for multimode or single mode fiber connections.

One example would be the IEEE 10 G BASE-SR standard which allows transmission of up to 300 meters on some grades of multimode optical fiber. This also allows a link as shown in FIG. **2**C where one end **263** of the E-O cable **200**C is connected to a first piece of network equipment **260** by connecting electrical connection **261** of the cable **200**C to an electrical port **262**. The E-O cable **200**C may be, for example, one instance of the E-O cable **200** of FIG. **2**A. The other end **265** of the E-O cable **200**C may be configured as an optical connector that is connected to an optical transceiver **266**, which has an electrical interface **267** with a second piece of network equipment **268**. Thus, in one embodiment, the E-O cable **200**C may interoperate with existing optical transceivers such as, for example, the SFP (see Small Form-factor Pluggable (SFP) Transceiver Multi-source Agreement (MSA), Sep. 14, 2000. Also, TNF-8074i Specification for SFP (Small Formfactor Pluggable) Transceiver Rev 1.0 May

12, 2001), XFP (see http://www.xfpmsa.org/XFP_S-FF_INF__8077i_Rev4__0.pdf), XENPAK (see http://www.x-enpak.org/MSA/XENPAK_MSA_R3.0.pdf), X2 (see http://www.x2 msa.org/X2_MSA_Rev2.0b.pdf) or XPAK transceivers, as long as the cable **200**C followed a consistent set of optical specifications suitable for the transceiver type. The configuration shown in FIG. **2**C could also include one or more lengths of optical fiber with standard connectors, with the number determined by the optical link budget to which the E-O cable and optical transceiver comply.

Referring for a moment back to FIG. **1**, although the cable **100** communicates over much of its length using optical signals, the cable **100** is connected externally using electrical connectors at both end. Thus, the electrical to electrical (E-E) cable **100** illustrated in FIG. **1** does not have to meet any external optical specification. This is a great advantage to achieving low cost. These inventive principles make it possible to retain this advantage in multiple cable links in a number of possible ways.

In one embodiment, the cable **100** is used in a three link system of E-E cables by connecting the cables **300**A and **300**B passively with a cable plug end connection **320** as shown in FIG. **3**A, or passively with any other male to male adaptor. The cables **300**A and **300**B may each be instances of the cable **100** of FIG. **1**. For instance, the cable might have a male gender connector (portion **306** of cable **300**A, and portion **311** of cable **300**B) with the corresponding host receptacles **301** and **310** each being a female connector. In this case, a cable plug end connector **320** would be comprised of two female receptacles **321**A and **321**B with the receiver connections of one cable (e.g., cable **300**A) connected to the transmitter connections of a second cable (e.g., cable **300**B), and vice versa. The female receptacle **321**A receives the mail connector **304**A of the cable **300**A, whereas the female receptacle **321**B receives the mail connector **304**B of the cable **300**B. Additionally, low speed control or indicator lines **323** may be used to supply power and low speed control data to the appropriate connection.

One consideration about the above described connection is that it requires that power be available to the optics in the connected ends of the E-E cable. In one embodiment of the E-E cable, there is no copper or other electrical conductor and thus no power connection between the cable ends, with the power for each end being supplied by the host system at each end. In one embodiment, power is delivered to the cable ends in one or more of the following two ways.

FIGS. **3**A and **3**B illustrated a cable plug end adapter for connecting two E-E cables of the type illustrated in FIG. **1**. The power for the two connector ends, **303** and **312** is provided separately to the cable plug end adapter. As one example, shown in FIG. **3**A, a chassis **325** may be provided with a single power connection and power supply **326** which in turns supplies power to one or cable plug end adapters. FIG. **3**B shows another example of such a powered set of receptacle to receptacle adapters **350** where the inputs (e.g., input **360**) and outputs (e.g., **361**) (note that the inputs and outputs are reversible) are arranged on the same side of the chassis. The adapter **350** itself receives power via power line **352** being fed into the adaptor **350** at portion **351**.

A second method for providing power is illustrated in FIG. **4**, which is similar to the structure described with respect to FIG. **3**A. However, in this case, E-E cables **400**A and **400**B are provided. Either or both of the cables **400**A and **400**B may be the same as that described with respect to FIG. **1**, except that at least a pair of electrical conductors (**411**A and **412**A in the case of cable **400**A, or **411**B and **412**B in the case of cable **400**B) is provided in the cable along with the optical fibers. These conductors **411** and **412** may either directly connected to the power connections on either end or in order to provide isolation between the two host ends in the normal connections. Pins may be provided separately for the near-end and far-end power connections. In one example, the conductor **411** may be a ground conductor, whereas the conductor **412** may be a power conductor.

An alternative form of the E-E cable could be used to concatenate two or more E-E cables without the need for a separate adapter/connector. This alternative E-E cable **500** is illustrated in FIG. **5**A, and the corresponding 2 cable configuration shown in FIG. **5**B. The E-E cable **500** shown in FIG. **5**A has a male plug connector **506** on one end **505** (i.e., the leftward illustrated end), which would be connected to the female receptacle **501** on the leftward illustrated host system, and contains transmit and receive optics in the form of a TOSA and a ROSA. The other end **503** (i.e., the rightward illustrated end) of the cable would also contain transmit and receive optics coupled to the optical fiber, also in the form of a TOSA and a ROSA. This right end **503**, however, would be configured with the receptacle female gender connector **507** which would function like a host connector, so that further cables may be attached to the cable **500** in a similar manner as those cables would be attached to a host connector. In one embodiment, the cable **500** might be a relative short "patch-cord" lengths of approximately one to five meters. The electrical conductors **520** and **521** are provided in order to provide power to the remote receptacle end **503** (the rightward end) from the host system (illustrated on the left). Referring to FIG. **5**B, an instance **500**A of the cable **500** of FIG. **5** may be combined with another cable **501** (which is similar to the cable **100** of FIG. **1**) to form a series of two cables. Furthermore, a series of three or more cables may be accomplished by connecting multiple instances of the cable of FIG. **5**A, with the cable of FIG. **1**. For instance, if three cables were to be used, two instances of the cable of FIG. **5**A may be combined with one instance of the cable of FIG. **1**. In that case, the center cable may be of a relatively long run of, for example, from ten to one hundred meters.

It may prove advantageous to provide separate power supplies for the near end (host side) and far end of a cable which incorporates electrical power conductors for a number of reasons. One reason is the desire to provide a degree of isolation between the interconnect systems. The second reason is to limit the supply requirements of the near end connection used in the majority of connections.

Finally, and probably most important is the desire to overcome some degree of voltage drop along the electrical conductors particularly is light weight, thinner conductors (higher gauge) are used. The use of a higher far end supply voltage may take one of two forms. The first is the use of a slightly higher supply voltage to overcome the conductor voltage drop. As a particular, the active devices in each end of the cable might require a supply voltage of +3.3V±5% (3.145 to 3.465V). In this case, requiring a 3.6V±5% (3.42 to 3.78V) on the far end supply connection would easily overcome the voltage drop expected in patchcords of 5 m or less with typical copper wire gauges. The second case is where there is a need to overcome losses in longer cable runs or to supply a larger amount of power to equipment at the cable end (for example adapters with retimers or even remote disk drives). In this case, it may make sense to use a much higher voltage (say about 40 Volts) where the resistive current loss would be much less. When such high voltages are used, the power must be converted down to lower voltages at the far end through the use of a switching power supply for example.

In any of the above described systems, it might be advantageous to specify the characteristics of various elements in the system in terms of the amount of signal timing jitter they add in order to limit the total jitter of the link to a value which can be handled by the circuit element which ultimately recovers the clock and retimes the signal. Jitter refers to the error in the time position of the digital data transitions and can have numerous sources some of which can be characterized as random and others which result in deterministic, usually data dependent errors in timing.

The above-described methods and mechanisms of linking cables will involve more interfaces (including the connectors, the laser driver and receiver ICs and the lasers and fibers themselves) that can add jitter to the transmitted data signal as compared to a single cable. Thus, meeting a reasonable jitter budget will generally be significantly more difficult in a multi-cable system as described than in a single cable (which could even be tested for its total jitter contribution in the factory).

It is possible to overcome potential jitter limitations by incorporating retiming circuits into the link. For example, a clock and data recovery circuit will eliminate jitter beyond a given frequency effectively resetting the jitter budget in this type of system. Although retiming circuits could be incorporated in the cable plug end adapters (or other adaptor for each direction of each duplex link described above and illustrated in FIGS. **3**A, and **4**, where the power for the optics and the retiming circuit would be supplied locally or from the patch-cord-cable respectively. An example of such a system is shown in FIGS. **6**A and **6**B, in which one or more adapters are incorporated in a single chassis, and using a single Integrated Circuit (IC) that incorporates more than one channel of retiming circuits.

Specifically, FIG. **6**A illustrates a configuration that is similar to the configuration of FIG. **3**A, except that there is a retiming circuit **601**A, **601**B or **601**C within the cable plug end adaptor and interposed within the corresponding electrical channel within the cable plug end adaptor. For instance, retiming circuit **601**B is interposed between active cables **600**A and **600**B to provide for appropriate jitter reduction through retiming. Actually, there are two retiming circuits represented by the retiming circuit **601**B, one for each direction of communication. The same can be said for retiming circuits **601**A and **601**B. Here, power is supplied by the cable plug end connection itself. Mechanisms for retiming are known in the art and thus will not be described in detailed herein.

FIG. **6**B illustrates a configuration that is similar to the configuration of FIG. **6**A, except that now power conductors are provided in one or both of the active cables **700**A and **700**B to provide power to the cable plug end connector. Power from one or both of these connectors could be used to power the retiming circuits **701**A, **701**B and **701**C (once again, six retiming circuits total), which operate to retime the electrical signals in the corresponding channel. For instance, retiming circuit **701**B is interposed between active cables **700**A and **700**B to provide for appropriate jitter reduction through retiming.

Similarly, a retiming circuit could be added to the plug-receptacle type patchcord described in FIG. **5**A. This embodiment is illustrated in FIG. **7**A, and the associated **2** cable connection of FIG. **5**B using this arrangement is shown in FIG. **7**B. For instance, referring to FIG. **7**A, electrical signals received from the female electrical connector **704** are retimed by retiming circuit **710**, whereas electrical signals to be transmitted onto the female electrical connector **704** are retimed by retiming circuit **711**.

As described in the some of the implementations of the copper based solution, the cable may also include a mechanism for supporting adaptive equalization of an input high speed electrical signal to reduce total link jitter, a mechanism for providing host selectable equalization of an input high speed electrical signal to reduce total link jitter, a mechanism that provides pre-emphasis of an output high speed electrical signal to reduce total link jitter, a mechanism for providing host selectable pre-emphasis of an output high speed electrical signal to reduce total link jitter. Different host systems may require different degrees of equalization and/or preemphasis because of the particular length or other nature of the electrical interconnect between the cable receptacle and the next IC elements. The integrated cable may support predefined limits of added deterministic and total jitter of a high speed signal, where such limits may be chosen to allow concatenation of up to 3 cables.

Another means of controlling jitter is non-linear jitter compensation which detects and adjusts edges of particular transitions (see United States Patent Publication No. 20050175355). This method is particularly well suited for compensating for known fixed deterministic jitter sources such as those arising from a particular length of host PCB trace.

It should be noted that while most of the jitter reduction techniques described address the jitter introduced by channel limitations on the host system or on a copper based cable, they may also be usefully applied to compensate for non-idealities of the optical transmitter or receiver (such as those do the non-linear characteristics of the laser source). They may also be used to compensate for the channel characteristics of the fiber itself. Depending on the type of fiber used and the length employed relative to it's total frequency bandwidth, the compensation may be for a simple frequency rolloff or for the more complex multiple peaked impulse responses seen in typical multimode fiber due to differential mode delay.

Cables in accordance with the principles of the present invention may also include additional functionality. For instance, the cable may include a mechanism for confirming whether or not a full duplex connection is present (e.g., by transmitting and receiving a relatively lower optical power level within Class 1 eye safety limits over either or both of the first optical fiber and the second optical fiber), a mechanism to reduce or shut-off optical power whenever a full duplex connection is not confirmed, and/or a mechanism to keep the optical power reduced or off until the presences of a full duplex connection is verified.

The electrical connector may include connections for a loss of signal (LOS) indication, a fault indication, a link disable control signal, presence indication of the integrated cable to a host system that is associated with the first or even second electrical port, an interrupt signal, a reference clock input, low speed serial data interfaces and/or any other connections for control of the cable.

The low speed serial data interface may be configured for use in control of the first electro-optical transducer, may be part of a system for the transmission of out of band data, may be configured to read or write data to nonvolatile memory in the optics portion of the cable, and/or may be used for one or more functions selected from the following list: serial identifier codes, customer security codes. Customer security codes could be provided to specially allow only host qualified implementations of the cable and to detect outright counterfeit parts. Diagnostic information, which would be dynamically updated in volatile memory could be provided over the same serial interface. The serial interface may also be used for factory setup of the device to load non-volatile data to an

internal EEPROM, FLASH memory or set of fusible links in the laser driver and/or receiver IC. The serial interface may be any serial interface, whether not existing (such as SPI interface or I2C interface) or whether to be developed in the future.

The cable may also include its own eye safety measures including a mechanism to disable one or more optical transmitter within the integrated cable if the integrated cable is physically severed such as, for example, when the nominal transmitted power may be greater than the IEC class 1 eye safety limit, a mechanism to transmit optical power at eye safe levels if the integrated cable is physically severed, and/or a mechanism to assert a fault signal if the integrated cable is severed. Furthermore, the eye safety circuit could be used to reassert the link if the shutoff were caused by a reversible cause such as the shutoff of power to the remote end.

One particular mechanism, which might be integrated in the cable, is the Open Fiber Control (OFC) system developed as part of the Fibre Channel standard (see ANSI X3.230-1994 section 6.2.3 pp 42-48). In fact, a considerably simplified version of the OFC protocol could be used since OFC must deal with two independent transceivers and must function properly if a non-OFC transceiver is connected to an OFC device. In the case of an active cable where both ends are controlled, this situation cannot occur. In any case, the eye safety features in the cable may be designed to function in the event of any reasonable single fault condition.

The cable may include at least one electrical conductor spanning the length of the integrated cable. As previously mentioned, this electrical conductor may be used to transmit electrical power from one end of the cable to the other end of the cable. However, alternatively or in addition, there may be electrical conductors for transmitting low speed serial data from one end of the integrated cable to the other end of the integrated cable. Furthermore, the cables included for transmitting electrical power may be simultaneously used for transmission of low speed serial data.

FIG. **8**A shows perhaps the simplest implementation of a copper cable **800** designed to interoperate with the optical cables previously described. In this example, the link is entirely passive, with a pair of copper conductors (pairs **831** and **832**) carrying the two duplex data streams between each connector. The copper conductor pair couple may be in the form of a shielded or unshielded twisted pair (as used in CAT-5 cabling) or in the form of a single ended or differential coaxial cables. For such a high bandwidth link, it would very advantageous to also include an overall cable shield **835**, tied to chassis ground of at last one host to limit electromagnetic emissions. FIG. **8**B illustrates a cross-section of what the cable **800** might look like. The other components of the cable **800** may be structured the same as described above for the cable **100**.

For a 10 G data rate and a reasonable size cable, the possible transmission length without special means in the host system would be very short, perhaps on the order of 1 meter of length. To improve the transmission length, active elements could be incorporated into the cable design as is illustrated into FIG. **9**. In FIG. **9**, cable driver ICs **913** and **923** and cable receiver ICs **914** and **924** are included in the cable ends. The functionality of these ICs will be described further below. Otherwise, the cable **900** of FIG. **9** may be structured the same as described above for cable **800** of FIG. **8**.

The same considerations for supplying power over the cable discussed previously apply to the copper variants as well; however there are some differences in implementation. For example, if needed, the copper signal conductors in FIG. **8** could be adapted to apply a supply voltage. Alternately, a separate pair of conductors for power could be included as shown in the cable **1000** with active cable drivers **1013**, **1014**, **1023** and **1024** illustrated in FIG. **10**. Since the need for a remote power is particular to two or more cable connections, FIG. **10** shows the remote end of the cable with a female receptacle **1004** to be used as a patchcord. In addition to the copper signal pairs **1031** and **1032**, a copper power pair **1036** is provided for providing power from one end of the cable **1000** to the other. A shield **1035** is also provided for EMI protection.

FIG. **11** illustrates the same cable functionality as FIG. **10**, but where the power is supplied to the remote end over the signal pairs, rather than having a dedicated power pair. Specifically, power from one end of the cable is provided into the copper twisted pair, and pulled from that twisted pair at the other end of the cable.

FIGS. **12**A and **12**B illustrates some of the useful features which might be incorporated into the ICs in a copper active cable design. FIG. **12**A shows the transmitter Integrated Circuit (IC). The first block in this IC would provide equalization to compensation for high frequency loss in the host board traces. Such equalization could be fixed, host selectable via a serial interface or automatically adaptive to the host impairments. The next block shown is jitter precompensation. In this relatively new technique, particular data transitions which tend to have the most significant associated deterministic timing errors (jitter) are detected and fixed small time delays are added to compensate. This can be used to compensate for both host board impairments as well as for at least a portion of the bandwidth impairment of the copper cable. The next block is a limiting function which restores the signal levels amplitudes which vary according to the host ICs and may have been further attenuated by the host transmission lines. The final block provides preemphasis to the high frequency content of the transmitted signal to overcome the larger loss on the cable of these high frequencies. This is well known technique and gains of 12 dB or larger may be used. The amount of gain can be adjusted at factory setup individually to match the particular length of the characteristics of the copper cabling.

Preemphasis is accomplished by either boosting the high frequency content or removing low frequency content. In either case, the resulting electrical waveform which results tends to show a large overshoot in after the transmission edge.

It should be noted that only a subset of the functional blocks may be included in the cable driver IC represented in FIG. **12**A particularly since some of their effective functionality is overlapping.

Also shown in FIG. **12**A, but likely not fully integrated into the IC itself would be optional circuit elements for combining a DC power connection into the signal power cable. The most straightforward means would be the use of a bias T where a large inductor or chain of inductors and other matching components is used to couple in DC current into the copper cable without significantly perturbing the high frequency characteristics of the high speed transmission lines.

FIG. **12**B shows the elements which could be included in an active cable IC receiver for the copper implementations of the cable. The elements follow somewhat in the reverse of the driver IC, but with important differences.

Beginning on the left of FIG. **12**B, where the copper pair or coax is received from the main length of the cable, there is an optional DC bias circuit to recover far end power from other cable end. This power can be used to supply the receiver IC itself and/or other elements in that cable end, or even components to which the remote cable end is attached, such as a powered adapter for connecting a following length of cable.

The next block shown, completely within the IC, is adjustable equalization. This block of equalization is provided to compensate for the cable high frequency rolloff, rather than the host PCB traces in the case of the driver. As in the case of the driver, it may provide fixed, adjustable or adaptive equalization. Adjustable but factory set equalization is of particular interest because the cable length and characteristics will be established at the time of the cable manufacture.

Following optional equalization, a limiting amplifier restores the zero and one levels to uniform amplitudes. In most such receivers, it is necessary to maintain an appropriate DC level at the circuit inputs to maintain proper duty cycle operation. This is typically implemented as shown by a DC restore loop which also establishes a low frequency cut-on of the high speed channel, which must be chosen appropriate for the minimum data rate and coding scheme.

Finally, for driving the host PCB traces at this end of the cable, an output driver is provided with optional preemphasis. In the case of the receiver, the preemphasis would be provided to help overcome high frequency losses on long PCB traces which can add significant jitter at 10 G operation. The preemphasis could be fixed, adjustable with adjustment at the factory or based on host control information on the expected loss characteristics of the PCB channel.

FIGS. **13**A and B illustrates what might be the most economical arrangement to achieve the advantages of a three cable connection. In this case, copper based patchcords are used for relatively short (1-5 meters) connections from host equipment to patchpanels, where they would join to a long length (5-100 meters) of fiber optic based active cable. In addition to potentially lower cost than a very short optical active cable, the copper cable may more easily provide the power to the central cable run. FIG. **13**A shows the arrangement where such power is carried by a dedicated conductor pair, whereas FIG. **13**B shows the power transferred over one of the high speed signaling pairs.

While FIGS. **13**A and **13**B show the short copper connections as a male to female connector arrangement, which directly connects to a standard male to male central cable, it should be obvious to one skilled in the arts that the adapter arrangements illustrated in FIGS. **3** and **4** may be similarly employed. Similarly, it should also be cleared that implementations in FIGS. **6** and **7** which employee retimers for added jitter reduction are also possible and with the same potential advantages.

Thus, the user need not be concerned about choosing whether copper-based solutions or optical solutions are more appropriate, and then choose to configure the system with the appropriate ports. Instead, the user may just plug in the cable, and enjoy all of the benefits of optical communication such as, for example, high bandwidth communication with low power consumption and high port density, and with less preprocessing and post-processing of information. Alternatively, the user could choose a copper based version of the cable for particularly short links (say from the top to the bottom of a rack of switching equipment) if economically advantageous.

A useful variation of these optical link cables with electrical interface is the possibility of carrying more than one bidirectional signal in a single cable. In particular, the size of the optical subassemblies, the low power dissipation possible and the density of pinout may allow the relatively easy implementation of two links within a connector width of approximately less than one half inch, or roughly the size of the very common RJ-45 network connector. For example, as shown in FIG. **14**A, the electrical connector **811** is defined with two sets of differential input and outputs (e.g., RX, RX**2**, TX and TX**2**) each representing independent bidirectional links, and the connector end may then contain two sets of TOSAs **1413** and **1414** and/or ROSAs **1415** and **1416**, which in turn are connected to 4 separate fibers **1431** through **1434**. Alternatively, the two channels may be integrated in a single TOSA with a dual channel laser driver and two VCSELS, either discrete or on the same subassembly. It will be apparent to one skilled at the art after having read this description that the principle of having two (or more) channels in a cable may be applied to all the variants of the cables described above as well as to the various means of interconnecting cables directly or through a separate adapter. Two sets of TOSAs **1423** and **1424** and ROSAs **1425** and **1426** may be included in the other end of the cable as well, thus establish a dual link duplex active cable **1400**A. It should be clear that implementations with more than 2 links in a single assembly are also possible.

FIG. **14**B illustrates an embodiment that is similar to FIG. **14**A in that one end **1459** supports two independent channels, but somewhere along its length **1465**, the cable splits into two single channel cables **1466** and **1467**, each terminating in a single channel connector **1473** and **1483**, respectively, each having a single TOSA and ROSA. For instance, cable end **1473** may be received by receptacle **1472** and includes TOSA **1474** and ROSA **1475**, whereas cable end **1483** may be received by receptacle **1482** and include TOSA **1484** and ROSA **1485**. Each TOSA **1474** and **1484** is connected through a respective optical fiber **1462** and **1461** to a corresponding ROSA **1456** and **1455** in the dual link end **1459** of the cable **1400**B. Each ROSA **1475** and **1485** is connected through a respective optical fiber **1463** and **1464** to a corresponding TOSA. The electrical connector **1451** of the dual link end **1459** of the cable is received by the electrical receptacle **1452** of the host. Note that the host transmits two differential high speed data signals TX and TX**2**, and receives two differential high speed data signals RX and RX**2**.

Finally, there are a number of characteristics of the electrical connector system which would be favorable for such an application. First, there might be a latching mechanism such as the tab style latch found in an RJ-45 style connector or a push-pull style latch employed in the SC style fiber optic connector.

Second, the receptacle on the host system may include provisions for visual indicators of link activity and other status. This may be accomplished by two means common in the RJ-45 connector system. The first is inclusion of LEDs in the front panel face of the host receptacle with electrical connections to the host PCB. A second method is to include plastic light pipes within the receptacle assembly to guide light from LEDs on the host PCBA to the front surface of the receptacle.

Third, the cable may have a provision for some sort of keying system to allow or prevent different types of host systems from being interconnected. One example where a keying system would be important is to prevent the insertion of a single link cable in a dual link port. Another example would be the prevention of the connection of two host systems running different protocols, though this could be detected by protocol means themselves. For example, exactly the same cable may be useful for Ethernet and Fiber Channel applications, yet a system's administrator running a datacenter with both types of equipment may wish to prevent the interconnection of these systems by simple mechanical means. Of course color coding or other simple means could be used for this purpose as well. Keying features on a connector often comprise a mechanical protrusion on one of a set of locations on the host receptacle and corresponding slots on the cable plug, or vice versa. Examples of these features can be found

in the definition of the HSSDC2 connector (see Small Form Factor Committee document SFF-8421 rev 2.6, Oct. 17, 2005).

There are many possible choices for the electrical connector in terms of the number of pins, their function and their relative arrangement.

FIG. **15**A shows one possible pin arrangement involving 11 contacts, both from the view of the cable plug end (top) as well as looking into the host receptacle (bottom). Some pins are necessary for any implementation such as the power for the near end circuitry, Vcc, the ground connections, Vee, the high speed differential transmit signals, TX+ and TX− and the high speed differential receive signals, RX+ and RX−. Other optional signals of use in some implementations are a separate power connection for far end power connections, VccF, a Fault/Interrupt pin, F/INT to indicate any problems with the link, and in the case of the Interrupt function, to prompt the host to query for more information, a serial data interface. In this case, a pair of pins representing a serial data line SDA and an associated serial data clock SCK such as used in the I2C communication system.

The far end power connection, VccF has been described previously as providing an isolated or alternative voltage to supply the active components within or beyond the far end of the cable, primarily for applications which concatenate multiple cables in the various manners described above.

FIG. **15**B shows a slightly different but important simplified pinout with only 9 connections. In this case, there are no separate connections for a serial data interface. Nevertheless it possible to still those connections over one of the set of high speed data pins through various possible means. These include, but are not limited to common mode signaling of the low speed interface on the differential high speed lines, or modulation of the low speed interface below the low frequency cut-on of the high speed data frequency content (which is typically modulated to achieve DC balance with no appreciable signal content below a given frequency typically now lower than about 30 kHz for these applications).

The seeming disadvantage of not having separate pins for the serial data path or the complexity of combining the low and high speed paths may be more than offset by the savings in the connector design by reducing to the minimum possible pin count.

FIG. **15**C shows one possible pin arrangement for a single channel cable using a 20 contact connector. This particular physical arrangement of pin contacts is of interest because it is based on the same layout as the PCB edge connector of the SFP and XFP form factors which have been proven to have good performance at 10 G serial data rates.

While numerous arrangements of these pins may be practical, FIG. **15**C illustrates high speed pairs TX+, TX−, RX+ and RX− are surrounded by ground lines Vee, which is useful both in achieving the desired impedance (for example 100 Ohms differential) of the differential lines, as well as reducing crosstalk between high speed lines. Several lines Res are shown as reserved for future functions. Two-wire interface lines (SDA) and (SCL) may provide serial data to the electrical connector for controlling the optics and for other desired functions.

FIG. **15**D shows a similar pin arrangement, but one designed for cables carrying two full duplex links. Specifically, pins TX**2**+, TX**2**−, RX**2**+ and RX**2**− are used for a second duplex link, as well as a separate Fault line F/INT**2**. Finally, FIG. **15**E shows a 22 pin arrangement for a dual link which differs from FIGS. **15**C and **15**D in that it provides more ground separation between the high speed pairs. It should be obvious to one skilled in the arts that a simplified version for a single link can be derived from FIG. **15**C and that certain aspects of the arrangements are arbitrary.

Thus, the cable permits high-speed communication using optics while not requiring that the network nodes interface with the cable using optics. Instead, the user may simply plug the cable into electrical connections. The cable may also include additional functionality to improve the performance and safety of the cable.

FIG. **16** illustrates a view of one end **1600** of one embodiment of a single link active cable. A top part of the shell **1601** is cut away for illustrative purposes so that the internals of the end **1600** may be viewed. The end **1600** has 10 electrical traces **1602** disposed on each side of printed circuit board **1610**, allowing for a total of 20 electrical traces. In this case, the PCB edge contact design is the same as that in the existing SFP form factor standard, though that is not a requirement of such a design. Thus, the end **1600** may support the connection configurations of FIG. **15**C or **15**D. The end **1600** includes ROSA **1603** and TOSA **1604**, which are coupled to the corresponding receive optical fiber **1605** and the transmit optical fiber **1606** via ferrules **1607** and **1608**, respectively. The optical fibers **1605** and **1606** form part of cable **1609**, which is protected by the cable jacket. The cable typically would also incorporate a strength member such as Kevlar yarn which would be anchored to the interface between the external portion of the cable and the plug shell.

FIG. **17**A illustrates a view of one end **1700** of an embodiment of a dual link fully-duplex active cable. Once again, the top part of the shell **1701** is cut away for illustrative purposes. The end **1700** has 10 electrical traces disposed on each side of an electrical connector **1702** portion of the printed circuit board **1709**, allowing for a total of 20 electrical traces. Thus, the end **1700** may support the connection configurations of FIGS. **15**C and **15**D. However, another electrical trace could be added to each side of the electrical connector **1702** to permit a total of 22 traces to thereby support the connection configuration of FIG. **15**E. The end **1700** includes ROSA **1703** and TOSA **1704**, which are coupled to a corresponding receive optical fiber **1705** and the transmit optical fiber **1706** via ferrules **1707** and **1708**, respectively, on one side of the printed circuit board **1709**. Symmetrically, another set of ROSA and TOSAs is disposed on the far end of the support board, though not shown in this illustration, which may be similarly coupled to corresponding fibers **1715** and **1716** via corresponding ferrules. The optical fibers **1705**, **1706**, **1715** and **1716** form part of cable **1719**, which is protected by the cable jacket.

FIG. **17**B illustrates a perspective view of the end **1700** of FIG. **17**A, only with the shell **1701** entirely removed. Here, the ROSAs on both sides of the printed circuit board may be viewed. The TOSA on the far end of the printed circuit board is still not viewable, but it may be simply placed opposite the respective ROSA on the near side of the printed board. FIG. **17**C illustrates another perspective view of the end **1700** of FIG. **17**A.

FIG. **18** illustrates a view of one end **1800** of an embodiment of a single link fully-duplex active cable, with its protective shell removed for easier visualization. The electrical connectors **1802** may be similar to the electrical connectors **1602** of FIG. **16**. Here, the laser driver and post amplifier are integrated into a single integrated circuit **1810**. An EEPROM, which might be used to store setup or serial ID information, could be mounted on the far side of the printed circuit board. The end **1800** includes ROSA **1803** and TOSA **1804**, which are coupled to the corresponding receive optical fiber **1805** and the transmit optical fiber **1806** via ferrules **1807** and **1808**,

respectively. The optical fibers **1805** and **1806** form part of cable **1809**, which is protected by the cable jacket.

FIG. **2**C above illustrated how a variant of the optical cable with an optical interface compliant with optical link standards could be used to interconnect a host system with an electrical active cable receptacle to another system with an industry standard optical transceiver. This very useful application can also be achieved through the use of an adapter which plugs into the cage system of a standard form factor optical transceiver and which satisfies all the signaling requirements of that interface. In addition to connecting a system with a dedicated active cable receptacle to that with an industry standard optical transceiver, two such adapters could be used to interconnect any present day systems with such industry standard transceivers. In general, such adapters may satisfy the mechanical electrical signaling requirements of the various form factor standards which have generally been established through multisource agreements in the industry (references above).

FIG. **19** illustrates a signal mapping diagram of an adaptor **1900** that adapts between the common SFP standard and the active cable signals illustrated with respect to FIGS. **15**A-C. On the left side of the adaptor **1900** are the standard SFP signals **1901**A coupled to an SFP connector abstractly represented by reference number **1902**A. On the right of the adaptor **1900** are the active signals **1901**B of FIG. **15**A-**15**C coupled to the active cable connector abstractly represented by reference number **1902**B. The adaptor **1900** may include an optional power conditioner **1903** if power regulation is needed between the SFP power supply Vcc and the active cable power supply VccF.

FIG. **20**A illustrates a first embodiment of a mechanical design of an SFP to active cable adaptor. Here, a shell is shown protecting hidden internal circuitry and components. The proximate end of the adaptor shows the electrical receptacle for the active cable, with a latch bail to actuate the retention mechanism of the overall adapter (a standard feature of the SFP mechanical interface). A separate latch mechanism, [Shown only as a small catch in the view FIG. **20**B] is provided for retaining the cable to the adaptor. Several contacts are shown which contact the respective electrical traces of the active cable end when the active cable is inserted into its corresponding electrical receptacle on the adaptor. EMI spring are shown that ensure electrical contact of the shell to the host, to thereby ensure that the shell carries a voltage that at least partially prevents electromagnetic emissions from the host system or adaptor itself from exiting the system.

FIG. **20**B illustrates another perspective view of the mechanism design of the adaptor of FIG. **20**A. Here, the SFP end of the adaptor is shown in detail. The SPF end includes a Printed Circuit Board (PCBA) that has multiple electrical contacts suitable for reception of any SFP-compliance connector. An SFP latch is also shown, which complies with the SFP standard.

FIG. **20**C illustrates a top perspective view of the adaptor with more of its shell cut-away to expose the various components on the upper surface of the printed circuit board including electrical traces from the SFP electrical connector, and the signal mapping component **2002**. The signal mapping component **2002** mechanically receives the active cable so as to be electrically coupled to the active cable, and is electrically hardwired to the SFP traces. The mapping component **2002** may perform appropriate signal mapping, an example of which being illustrated in FIG. **19**. FIG. **20**D illustrates a bottom perspective view of the adaptor with more of its shell cut away to expose the various components of the lower surface of the printed circuit board

FIG. **21** illustrates a signal mapping diagram of an adaptor **2100** that adapts between the common XFP standard and the active cable signals illustrated with respect to FIG. **15**A-**15**C. On the left side of the adaptor **1500** are the standard XFP signals **2101**A coupled to an XFP edge connector abstractly represented by reference number **2102**A. On the right of the adaptor **2100** are the active signals **2101**B of FIG. **15**A-**15**C coupled to the active cable connector abstractly represented by reference number **2102**B. The adaptor **2100** may include an optional power conditioner **2103** if power regulation is needed between the XFP power supply Vcc and the active cable power supply VccF.

The XFP standard requires a retiming function which may be included in the adaptor and is illustrated in FIG. **21** as the two optional CDR blocks. However it may provide a useful cost and power savings to eliminate the retiming function. This may be acceptable if the active cable sufficiently limits jitter because of the choice of fiber, length or any of the number of active jitter reductions described previously, such as jitter precompensation.

FIG. **22**A illustrates a view of first embodiment of a mechanical design of an XFP to active cable adapter. The proximate end of the adaptor shows the electrical receptacle for the active cable, with a latch bail to actuate the retention mechanism of the overall adapter (a standard feature of the XFP mechanical interface, which in this illustration is implemented as two sliding latch features on the sides, only one of which is visible). A separate latch mechanism (shown only as a small catch in the view FIG. **22**A) is provided for retaining the cable to the adaptor. Several contacts are shown which contact the respective electrical traces of the active cable end when the active cable is inserted into its corresponding electrical receptacle on the adaptor.

FIG. **22**B illustrates another perspective view of the design of the adaptor in FIG. **16**A. This view shows part of the XFP to host interface on the internal PCBA.

FIG. **22**C illustrates a top perspective with a portion of the shell cut-away to expose features of the internal design, particularly the layout of the top of the PCBA. High speed signals from the XFP edge connector are routed directly to and from a TX and RX CDR respectively. The output of the TX CDR is directly tied to the TX pins of the active cable electrical receptacle. Similarly, high speed lines from the receive pins of the active cable receptacle are coupled to the RX CDR.

FIG. **22**D shows a bottom perspective view of the adapter with the bottom shell cover removed. This view illustrates connection of the various low speed status and control lines through a microcontroller to adapt them to the related signals used by the active cable receptacle while at the same time the expectation of the host system for the responses from these connections. The microcontroller can similarly provide EEPROM to provide an appropriate response to a serial ID query from the host. Also show in FIG. **22**D are the various power supply connections for the 3.3V and 5.0V supplies as well as the previously discussed APS supply.

The final type of adaptor discussed is for use in X2 receptacles. The X2 is one of three form factors which implement a XAUI (10 Gigabit Attachment Unit Interface) electrical interface, the other two being the XENPAK and XPAK form factors. The host side electrical interface of these three designs is essentially identical and they differ only in mechanical features.

FIG. **22** illustrates a signal mapping diagram of an X2 to active cable adapter. The main feature of the XAUI interface is that the overall 10 G datastream is carried over four lower speed connections in each direction (labeled as RX+/−0-3 and TX+/−0-3). Because the four XAUI lines uses a different

signal coding format than the 10 G serial connections, the actual transition rate is somewhat higher than a quarter of the rate of the serial interface. In addition to the parallel electrical interface, the XAUI standard requires jitter reduction, retiming and recoding the signals before transmission as a signal, as vary as a wide range of low speed control and monitoring signals. Presently, most of these features have been implemented in a single IC commonly known as a XAUI SERDES (serialiser-deserialiser) and shown in FIG. **17**

Another feature of the XAUI interface is an adjustable power supply, labeled APS on the pin connections in FIG. **23**. This special connection is for an adjustable power supply on the host system for which the voltage is set by a resistor to ground inside the X2 module (or in this case adapter) connected to a pin labeled APS SET. A third related pin labeled APS sense carries an internal measurement of the APS voltage back to the host system as part of the voltage control feedback loop. In the present embodiment, this adjustable power supply is only used for powering the XAUI SERDES itself, typically a low voltage CMOS IC.

FIG. **24**A illustrates a view of first embodiment of a mechanical design of an X2 to active cable adapter. The proximate end of the adaptor shows the electrical receptacle for the active cable, with a latch release to actuate the retention mechanism of the overall adapter (a standard feature of the X2 mechanical interface, which in this illustration is implemented as two retracting latch features on the sides, only one of which is visible). A separate latch mechanism, (not shown) is provided for retaining the cable to the adaptor. Several contacts are shown which contact the respective electrical traces of the active cable end when the active cable is inserted into its corresponding electrical receptacle on the adaptor.

FIG. **24**B illustrates another perspective view of the design of the adaptor in FIG. **24**A. This view shows part of the X2 to host interface on the internal PCBA.

FIG. **24**C illustrates a top perspective with a portion of the shell cut-away to expose features of the internal design, particularly the layout of the top of the PCBA. Four sets of XAUI signal differential pairs are routed in each direction from the X2 edge connector are routed directly to and from the XAUI SERDES. The TX output of the XAUI SERDES is directly tied to the TX pins of the active cable electrical receptacle. Similarly, high speed lines from the receive pins of the active cable receptacle are coupled to the RX input of the XAUI SERDES. Also shown in FIG. **24** is a crystal oscillator (labeled XTAL). This is normally required to provide the timing basis of the transmitted serial signal.

FIG. **24** shows a bottom perspective view of the adapter with the bottom shell cover removed. This view illustrates connection low speed status and control lines to and from the XAUI SERDES which used to adapt them to the related signals used by the active cable receptacle while at the same time the expectation of the host system for the responses from these connections. The SERDES will provide an interface to EEPROM to provide an appropriate response to a serial ID query from the host. Also show in FIG. **2418**D are the various power supply connections for the 3.3V and 5.0V supplies as well as the previously discussed APS supply.

Accordingly, an active cable is described in which an electrical connection is provided on at least one side of the cable to receive the high speed electrical signal, while having the signal being communicated optically through most of the cable length. An adaptor for adapting between SFP, XFP or X2 and the active cable connector has also been described.

The present invention may be embodied in other specific forms without departing from its spirit or essential characteristics. The described embodiments are to be considered in all respects only as illustrative and not restrictive. The scope of the invention is, therefore, indicated by the appended claims rather than by the foregoing description. All changes which come within the meaning and range of equivalency of the claims are to be embraced within their scope.

What is claimed is:

1. An integrated cable comprising:

a first optical fiber within the integrated cable, the first optical fiber having a first end and a second end;

a first electrical connector integrated with the integrated cable, the first electrical connector configured to connect with a first electrical port external to the integrated cable such that when connected to the first electrical port the first electrical connector is configured to receive a first electrical signal and provide the first electrical signal to a first electro-optical transducer;

the first electro-optical transducer disposed within the integrated cable and coupled to the first end of the first optical fiber such that when the first electro-optical transducer receives the first electrical signal and converts the first electrical signal into a first optical signal the first optical signal is coupled to the first end of the first optical fiber;

a second electrical connector integrated with the integrated cable, the second electrical connector configured to connect with a second electrical port external to the integrated cable;

a first opto-electrical transducer disposed within the integrated cable and coupled to a second end of the first optical fiber such that when the first opto-electrical transducer receives the first optical signal from the second end of the first optical fiber the first opto-electrical transducer converts the first optical signal to a second electrical signal and provides the second electrical signal to the second electrical connector such that when connected to the second electrical port the second electrical connector is configured to provide the second electrical signal to the second electrical port; and

a circuit disposed in the integrated cable, the circuit configured to provide pre-emphasis of the second electrical signal.

2. An integrated cable in accordance with claim **1**, wherein the pre-emphasis is accomplished by either boosting high frequency content or removing low frequency content from the first or second electrical signals.

3. An integrated cable in accordance with claim **1**, further comprising:

a mechanism for providing host selection of a pre-emphasis setting.

4. An integrated cable in accordance with claim **3**, wherein the preemphasis setting is host selectable via a serial interface of the integrated cable.

5. An integrated cable in accordance with claim **4**, wherein the serial interface is I2C.

6. An integrated cable in accordance with claim **1**, wherein the preemphasis is configured to compensate for high frequency rolloff of the host electrical traces.

7. An integrated cable in accordance with claim **1**, wherein the selection of the pre-emphasis depends on a length of an electrical interconnect between the first or second electrical ports and IC elements of the host.

8. An integrated cable in accordance with claim **1**, further comprising circuitry configured to provide equalization of the first electrical signal within the integrated cable.

9. An integrated cable in accordance with claim 8, wherein the equalization is fixed, adjustable, or adaptable equalization.

10. An integrated cable in accordance with claim 9, wherein the equalization is adjustable.

11. An integrated cable in accordance with claim 10, wherein the adjustable equalization is host selectable via a serial interface of the integrated cable.

12. An integrated cable in accordance with claim 11, wherein the serial interface includes I2C.

13. An integrated cable in accordance with claim 8, wherein the equalization is configured to compensate for high frequency rolloff of the host electrical traces.

14. An integrated cable in accordance with claim 8, wherein the equalization is automatically adaptive to host impairments.

15. An integrated cable in accordance with claim 1, further comprising memory in the integrated cable.

16. An integrated cable in accordance with claim 15, the integrated cable including a serial data interface configured to read or write data to the memory.

17. An integrated cable in accordance with claim 16, wherein the serial data interface is configured to communicate diagnostic information from the integrated cable.

18. An integrated cable in accordance with claim 16, wherein the serial data interface includes I2C.

19. An integrated cable in accordance with claim 1, further comprising:

a second optical fiber within the integrated cable for transmitting optical signals in the same direction as the first optical fiber, the second optical fiber having a first end and a second end;

the first electrical connector configured to receive a third electrical signal and provide the third electrical signal to a second electro-optical transducer;

the second electro-optical transducer disposed within the integrated cable and coupled to the first end of the second optical fiber such that when the second electro-optical transducer receives the third electrical signal and converts the third electrical signal into a second optical signal the second optical signal is coupled to the first end of the second optical fiber; and

a second opto-electrical transducer disposed within the integrated cable and coupled to a second end of the second optical fiber such that when the second opto-electrical transducer receives the second optical signal from the second end of the second optical fiber the second opto-electrical transducer converts the second optical signal to a fourth electrical signal and provides the fourth electrical signal to the second electrical connector such that when connected to the second electrical port the second electrical connector is configured to transmit the fourth electrical signal to the second electrical port.

20. An integrated cable in accordance with claim 1, further comprising:

a second optical fiber within the integrated cable for transmitting optical signals in the opposite direction as the first optical fiber, the second optical fiber having a first end and a second end;

the second electrical connector configured to receive a third electrical signal and provide the third electrical signal to a second electro-optical transducer;

the second electro-optical transducer disposed within the integrated cable and coupled to the second end of the second optical fiber such that when the second electro-optical transducer receives the third electrical signal and converts the third electrical signal into a second optical signal the second optical signal is coupled to the second end of the second optical fiber; and

a second opto-electrical transducer disposed within the integrated cable and coupled to the first end of the second optical fiber such that when the second opto-electrical transducer receives the second optical signal from the first end of the second optical fiber the second opto-electrical transducer converts the second optical signal to a fourth electrical signal and provides the fourth electrical signal to the first electrical connector such that when connected to the first electrical port the first electrical connector is configured to transmit the fourth electrical signal to the first electrical port.

21. An integrated cable comprising:

a first optical fiber within the integrated cable, the first optical fiber having a first end and a second end;

a first electrical connector integrated with the integrated cable, the first electrical connector configured to connect with a first electrical port external to the integrated cable such that when connected to the first electrical port the first electrical connector is configured to receive a first electrical signal and provide the first electrical signal to a first electro-optical transducer;

the first electro-optical transducer disposed within the integrated cable and coupled to the first end of the first optical fiber such that when the first electro-optical transducer receives the first electrical signal and converts the first electrical signal into a first optical signal the first optical signal is coupled to the first end of the first optical fiber;

a second electrical connector integrated with the integrated cable, the second electrical connector configured to connect with a second electrical port external to the integrated cable;

a first opto-electrical transducer disposed within the integrated cable and coupled to a second end of the first optical fiber such that when the first opto-electrical transducer receives the first optical signal from the second end of the first optical fiber the first opto-electrical transducer converts the first optical signal to a second electrical signal and provides the second electrical signal to the second electrical connector such that when connected to the second electrical port the second electrical connector is configured to provide the second electrical signal to the second electrical port; and

circuitry configured to provide equalization of the first electrical signal within the integrated cable.

22. An integrated cable in accordance with claim 21, wherein the equalization is fixed, adjustable, or adaptive equalization.

23. An integrated cable in accordance with claim 22, wherein the equalization is adjustable.

24. An integrated cable in accordance with claim 23, wherein the adjustable equalization is host selectable via a serial interface of the integrated cable.

25. An integrated cable in accordance with claim 24, wherein the serial interface includes I2C.

26. An integrated cable in accordance with claim 21, wherein the equalization is configured to compensate for high frequency rolloff of the host traces.

27. An integrated cable in accordance with claim 21, wherein the equalization is automatically adaptive to host impairments.

28. An integrated cable in accordance with claim 21, further comprising:

a second optical fiber within the integrated cable for transmitting optical signals in the same direction as the first optical fiber, the second optical fiber having a first end and a second end;

the first electrical connector configured to receive a third electrical signal and provide the third electrical signal to a second electro-optical transducer;

the second electro-optical transducer disposed within the integrated cable and coupled to the first end of the second optical fiber such that when the second electro-optical transducer receives the third electrical signal and converts the third electrical signal into a second optical signal the second optical signal is coupled to the first end of the second optical fiber; and

a second opto-electrical transducer disposed within the integrated cable and coupled to a second end of the second optical fiber such that when the second opto-electrical transducer receives the second optical signal from the second end of the second optical fiber the second opto-electrical transducer converts the second optical signal to a fourth electrical signal and provides the fourth electrical signal to the second electrical connector such that when connected to the second electrical port the second electrical connector is configured to transmit the fourth electrical signal to the second electrical port.

29. An integrated cable in accordance with claim **21**, further comprising:

a second optical fiber within the integrated cable for transmitting optical signals in the opposite direction as the first optical fiber, the second optical fiber having a first end and a second end;

the second electrical connector configured to receive a third electrical signal and provide the third electrical signal to a second electro-optical transducer;

the second electro-optical transducer disposed within the integrated cable and coupled to the second end of the second optical fiber such that when the second electro-optical transducer receives the third electrical signal and converts the third electrical signal into a second optical signal the second optical signal is coupled to the second end of the second optical fiber; and

a second opto-electrical transducer disposed within the integrated cable and coupled to the first end of the second optical fiber such that when the second opto-electrical transducer receives the second optical signal from the first end of the second optical fiber the second opto-electrical transducer converts the second optical signal to a fourth electrical signal and provides the fourth electrical signal to the first electrical connector such that when connected to the first electrical port the first electrical connector is configured to transmit the fourth electrical signal to the first electrical port.

* * * * *