US007239665B2

(12) **United States Patent**
Mezer

(10) **Patent No.: US 7,239,665 B2**
(45) **Date of Patent: Jul. 3, 2007**

(54) **SELECTION OF PRE-COMPUTED EQUALIZER BASED ON CHANNEL CHARACTERISTIC**

(75) Inventor: **Amir Mezer**, Haifa (IL)

(73) Assignee: **Intel Corporation**, Santa Clara, CA (US)

(*) Notice: Subject to any disclaimer, the term of this patent is extended or adjusted under 35 U.S.C. 154(b) by 784 days.

(21) Appl. No.: **10/721,003**

(22) Filed: **Nov. 24, 2003**

(65) **Prior Publication Data**

US 2005/0111559 A1 May 26, 2005

(51) **Int. Cl.**
H04B 3/00 (2006.01)

(52) **U.S. Cl.** **375/257**

(58) **Field of Classification Search** 375/257, 375/229, 230, 232

See application file for complete search history.

(56) **References Cited**

U.S. PATENT DOCUMENTS

4,078,157	A *	3/1978	Lender et al.	375/214
4,303,896	A *	12/1981	Slabinski	333/28 R
5,708,703	A *	1/1998	Nagaraj	379/340
6,304,599	B1 *	10/2001	Igarashi	375/232
6,438,163	B1 *	8/2002	Raghavan et al.	375/233
2003/0138040	A1 *	7/2003	Rouphael et al.	375/233
2004/0037354	A1 *	2/2004	Jayaraman et al.	375/229

* cited by examiner

Primary Examiner—Khai Tran
(74) *Attorney, Agent, or Firm*—Buckley, Maschoff & Talwalkar LLC

(57) **ABSTRACT**

In some embodiments, a method includes determining a characteristic of a communication channel and selecting, on the basis of the determined characteristic, a pre-computed equalizer characteristic for application to signals received via the communication channel.

13 Claims, 6 Drawing Sheets

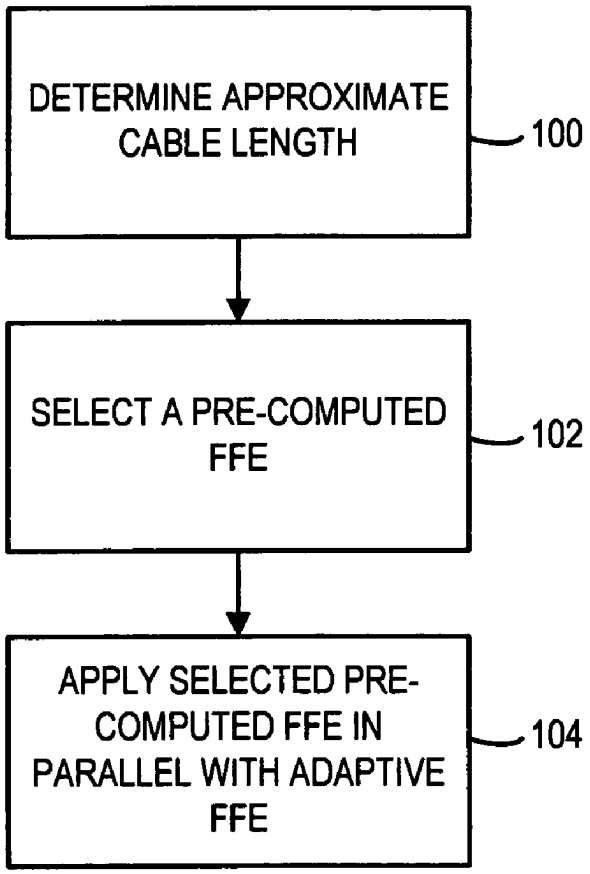

Volex Exhibit 1007
Volex v. Credo

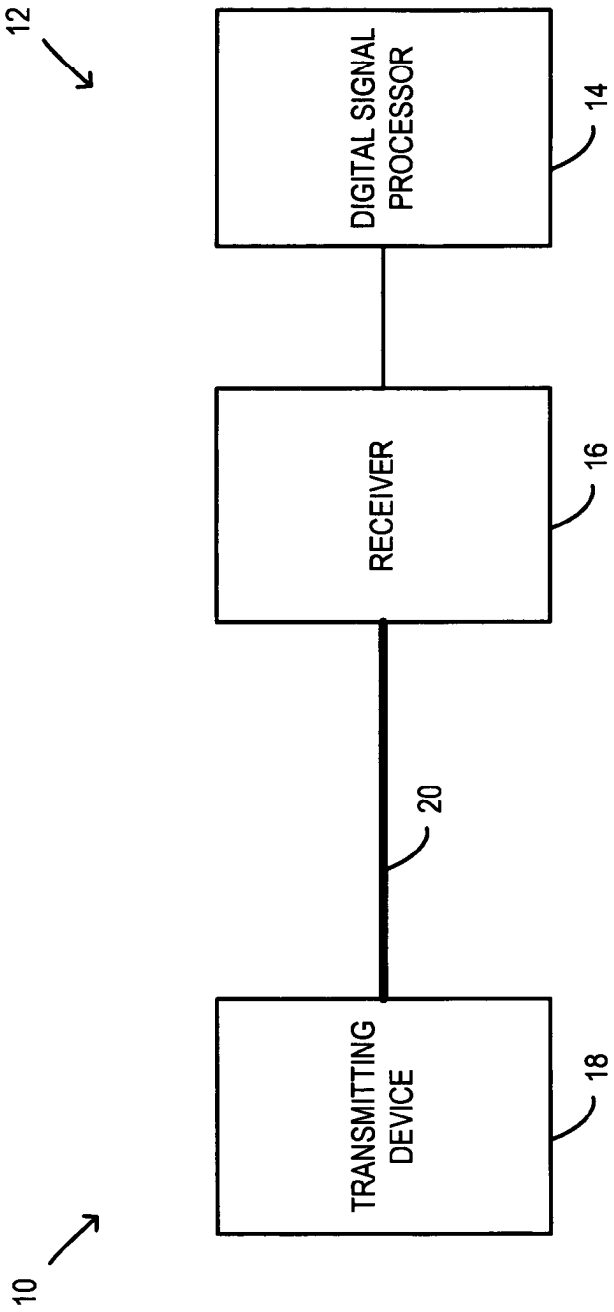
12
DIGITAL SIGNAL PROCESSOR
14
RECEIVER
16
20
TRANSMITTING DEVICE
18
10

FIG. 1

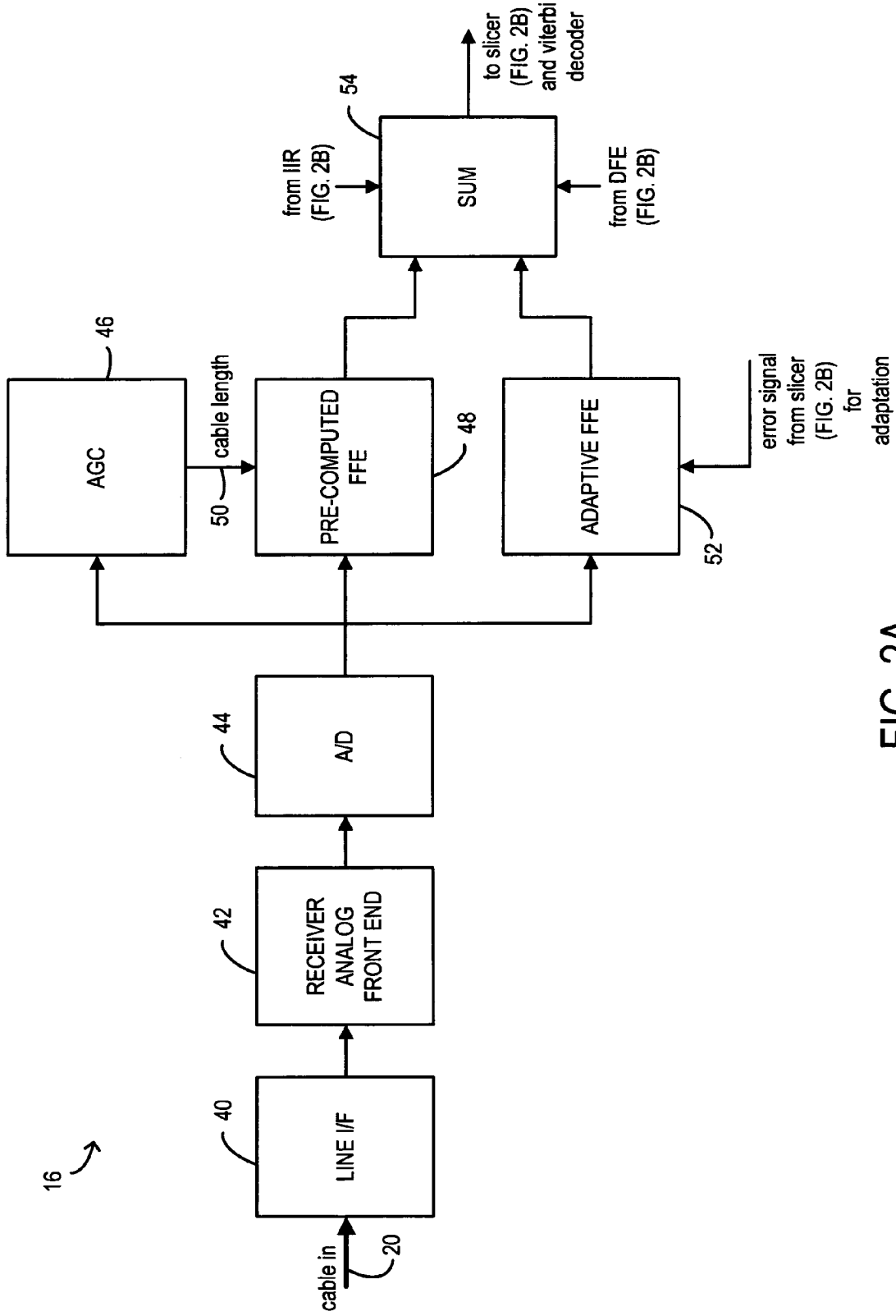
16
cable in
20
LINE I/F
40
RECEIVER ANALOG FRONT END
42
A/D
44
AGC
46
cable length
50
PRE-COMPUTED FFE
48
ADAPTIVE FFE
52
error signal from slicer (FIG. 2B) for adaptation
from IIR (FIG. 2B)
SUM
54
from DFE (FIG. 2B)
to slicer (FIG. 2B) and viterbi decoder

FIG. 2A

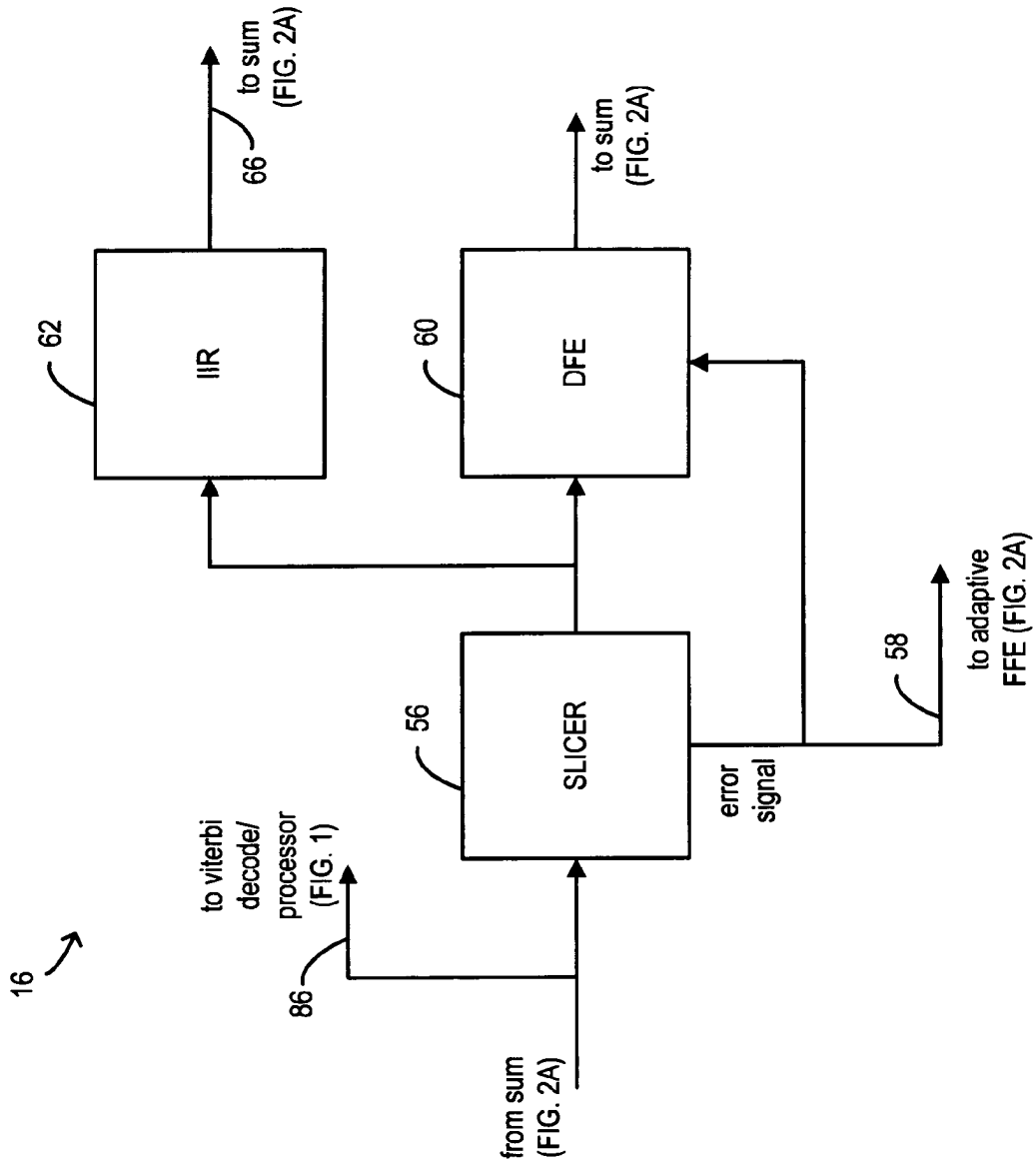
16
62
IIR
66
to sum
(FIG. 2A)
60
DFE
to sum
(FIG. 2A)
56
SLICER
86
to viterbi
decode/
processor
(FIG. 1)
from sum
(FIG. 2A)
error
signal
58
to adaptive
FFE (FIG. 2A)

FIG. 2B

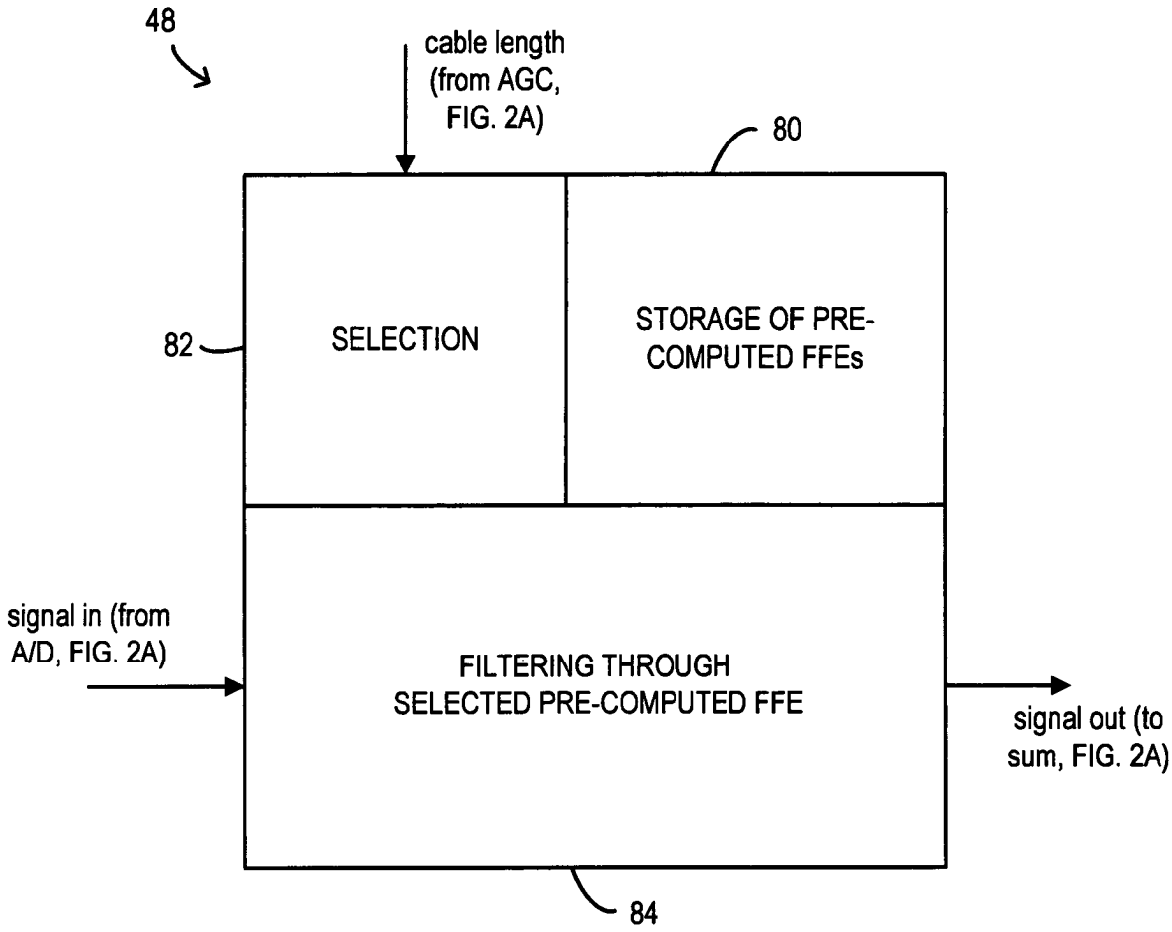
48
cable length (from AGC, FIG. 2A)
80
82
SELECTION
STORAGE OF PRE-COMPUTED FFEs
signal in (from A/D, FIG. 2A)
FILTERING THROUGH SELECTED PRE-COMPUTED FFE
signal out (to sum, FIG. 2A)
84

FIG. 3

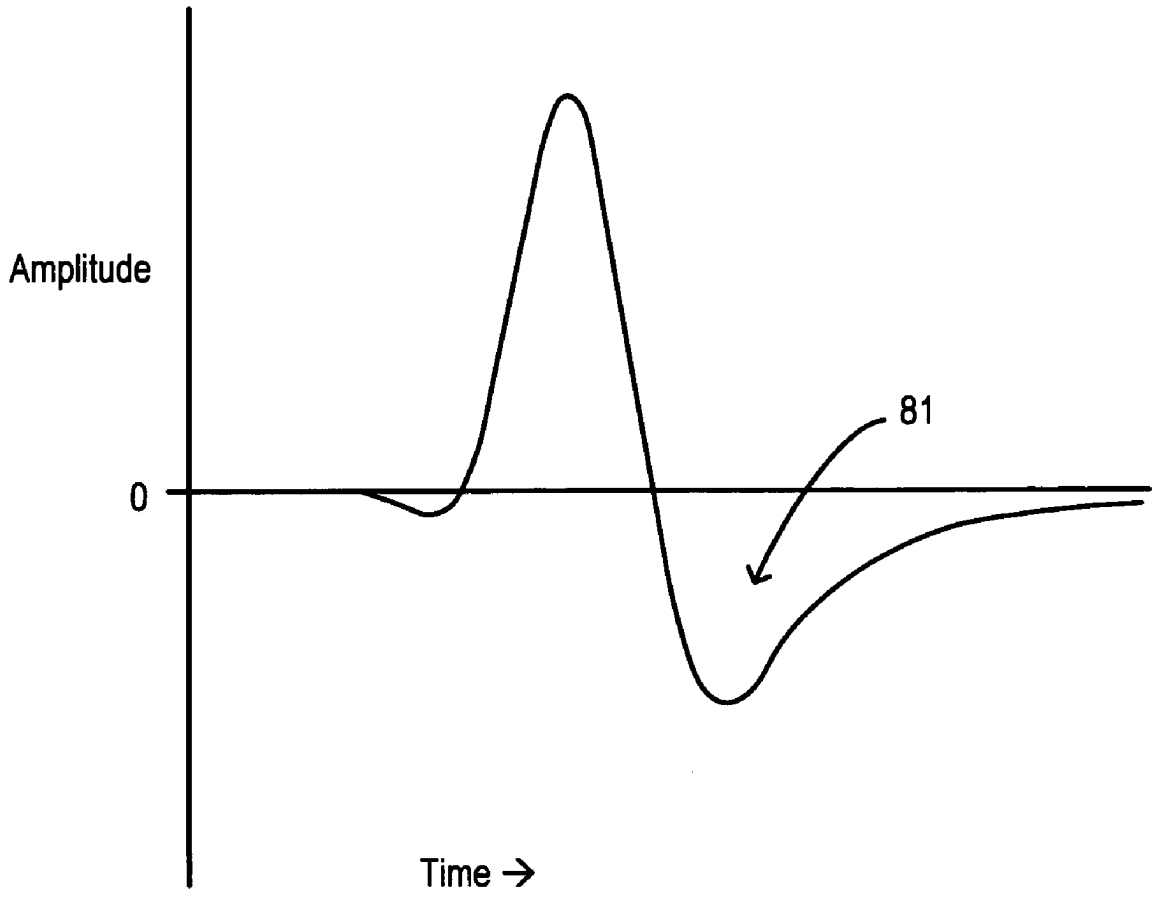

FIG. 4

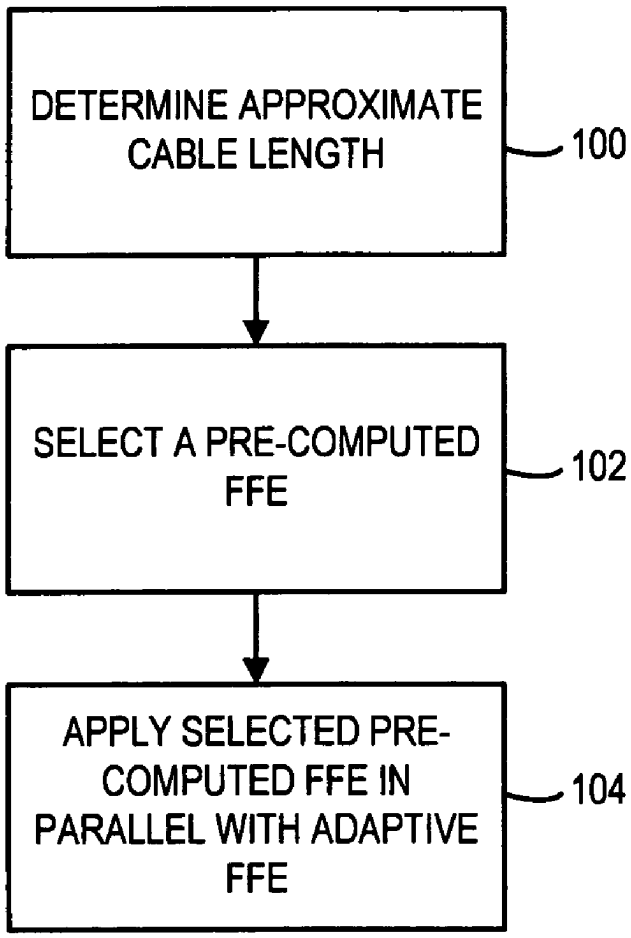
DETERMINE APPROXIMATE CABLE LENGTH
100
SELECT A PRE-COMPUTED FFE
102
APPLY SELECTED PRE-COMPUTED FFE IN PARALLEL WITH ADAPTIVE FFE
104

FIG. 5

SELECTION OF PRE-COMPUTED EQUALIZER BASED ON CHANNEL CHARACTERISTIC

BACKGROUND

A typical physical communication channel, such as an Ethernet cable, introduces inter-symbol interference (ISI) in the received data signal. To minimize the adverse effects of ISI and to improve signal to noise ratio (SNR), it is customary to include in the receiver a filter known as an "equalizer". In some receivers, the entire equalizer is adaptive, but in such cases convergence of the equalizer may be rather slow. In other receivers a fixed equalizer is used in combination with an adaptive equalizer to provide improved convergence. However, even with use of a fixed equalizer and an adaptive equalizer in combination, convergence of the adaptive equalizer may be slower than is desirable.

BRIEF DESCRIPTION OF THE DRAWINGS

FIG. **1** is block diagram of an electronic apparatus provided according to some embodiments.

FIGS. **2**A and **2**B together form a block diagram of a receiver that is part of the apparatus of FIG. **1**.

FIG. **3** illustrates in block form some details of a pre-computed feed forward equalizer (FFE) block of the receiver of FIGS. **2**A and **2**B.

FIG. **4** is graph that illustrates a desirable equalizer output in the receiver of FIGS. **2**A and **2**B.

FIG. **5** is a flow chart that illustrates a process performed according to some embodiments in the receiver of FIGS. **2**A and **2**B.

DETAILED DESCRIPTION

FIG. **1** is a block diagram of an apparatus **10** provided according to some embodiments. The apparatus includes a network controller **12** which includes a digital signal processor **14** coupled to a receiver **16**. The network controller **12** may also include other components, which are not shown, but which may be coupled to the digital signal processor **14**.

In other embodiments, the receiver may be part of a computer system and may be coupled to a general purpose processor to which other components such as volatile and non-volatile memory devices, mass storage and input/output devices may be coupled.

The apparatus **10** also includes a transmitting device **18** and a communication channel **20** which couples the transmitting device **18** to the receiver **16** of the network controller **12**. The transmitting device **18** may send data signals to the receiver **16** via the communication channel **20**. The communication channel **20** may include a standard cable (not separately shown) such as a Gigabit Ethernet cable.

Although not indicated in the drawing, the network controller **12** may also include a transmitter, which may be integrated with the receiver **16** in the form of a data transceiver that is coupled to the digital signal processor **14**. The transmitting device **18** may also have a data receiving capability to receive data transmitted by the network controller **12** over the communication channel **20**.

FIGS. **2**A and **2**B together form a block diagram of the receiver **16**.

As seen from FIG. **2**A, the receiver **16** includes a line interface **40** by which the receiver **16** is coupled to the communication channel (cable) **20**. Also included in the receiver **16** are receiver analog front end electronics **42**. The receiver analog front end electronics **42** are coupled to the line interface **40** to receive the signals received via the cable **20**. The receiver analog front end electronics **42** may perform signal conditioning on the incoming signals in accordance with conventional practices.

The receiver **16** further includes an analog-to-digital converter **44** which is coupled to the receiver analog front end electronics **42** to receive the incoming signals. The analog-to-digital converter **44** converts the incoming signals into a stream of digital samples.

The receiver **16** also includes an automatic gain control (AGC) circuit (or block) **46** which is coupled to the analog-to-digital converter **44** to receive the stream of digital samples output by the analog-to-digital converter **44**. The AGC circuit **46** may operate in accordance with conventional principles and, as a part of its conventional operation, may determine a characteristic of the communication channel **20** such as an approximate length of the cable which constitutes the communication channel **20**.

Also included in the receiver **16** is a pre-computed feed forward equalizer (FFE) block **48**. The pre-computed FFE block **48** is coupled to the analog-to-digital converter **44** to receive the stream of digital samples output by the analog-to-digital converter **44**. In addition, as indicated at **50**, the pre-computed FFE block **48** is also coupled to the AGC circuit **46** to receive a signal from the AGC circuit **46** that is indicative of the communication channel characteristic (e.g., approximate cable length) determined by the AGC circuit **46**. Details of the pre-computed FFE block **48** will be described below with reference to FIG. **3**.

The receiver **16** further includes an adaptive feed forward equalizer (FFE) **52** which is coupled to the analog-to-digital converter **44** to receive the stream of digital samples output by the analog-to-digital converter **44**. It should be understood that the adaptive FFE **52** and the pre-computed FFE block **48** may both be considered to be coupled to the line interface **40** via the receiver analog front end electronics **42** and the analog-to-digital converter **44** and may be considered to be coupled to the line interface **40** in parallel with each other.

The adaptive FFE **52** may operate in accordance with conventional principles and may, together with the pre-computed FFE block **48** and other components described below, operate to equalize the incoming signals to reduce or substantially eliminate inter-symbol interference (ISI) in the incoming signals. The adaptive FFE **52** may adapt the equalizer characteristic it applies to the incoming signals on the basis of an error signal received from a signal slicer block which will be described below.

There is also included in the receiver **16** a summing block **54**. The summing block **54** is coupled to the pre-computed FFE block **48** and to the adaptive FFE **52** to receive, as input signals, respective outputs provided by the pre-computed FFE block **48** and the adaptive FFE **52**. These outputs are the incoming signals, as at least partially equalized with respective equalizer characteristics applied by the pre-computed FFE block **48** and the adaptive FFE **52**. In addition, the summing block receives other inputs from components which will be described below. The summing block **54** operates to sum its input signals to produce an output signal.

Referring now to FIG. **2**B, the receiver **16** also includes a signal slicer block **56**. The signal slicer block **56** is coupled to the summing block **54** to receive the output of the summing block **54**.

The signal slicer block **56** may operate in accordance with conventional principles to produce two output signals. A first

output of the signal slicer block **56** may reflect a filtered and/or equalized signal output from the summing block **54** and may contain the data to be recovered from the incoming signals. The second output of the signal slicer block **56** may be an error signal that indicates deviation of the output of the summing block **54** from a pre-determined ideal signal profile. The error signal, as indicated at **58**, may be fed back to the adaptive FFE **52** (FIG. **2**A) to control the adaptive operation of the adaptive FFE **52**.

Continuing to refer to FIG. **2**B, the receiver **16** may also include a decision feedback equalizer (DFE) **60** which may be coupled to the signal slicer block **56** to receive the first output of the signal slicer block **56**. The DFE **60** may operate in accordance with conventional principles to adaptively apply an equalizer characteristic to the first output of the signal slicer block **56**. The equalizer characteristic applied by the DFE **60** may be adapted based on the error signal output by the signal slicer block **56**. The resulting output of the DFE **60** is fed back to the summing block **54** (FIG. **2**A) as one of the inputs of the summing block **54**.

The receiver **16** may also include an infinite impulse response (IIR) filter **62** which may be coupled to the signal slicer block **56** to receive the first output of the signal slicer block **56**. The IIR filter **62** may operate in accordance with conventional principles to apply a filter characteristic to the first output of the signal slicer block **56**. The resulting output of the IIR filter **62** may be fed back (as indicated at **66** in FIG. **2**B) to the summing block **54** (FIG. **2**A) as one of the inputs of the summing block **54**. In some embodiments, the IIR filter **62** may be integrated with the above-mentioned Viterbi decoder, which is not shown.

Referring now to FIG. **3**, details of the pre-computed FFE block **48** will now be described.

As indicated at **80** in FIG. **3**, the pre-computed FFE block **48** includes a capability for storing a number of pre-computed FFE characteristics. Each of these characteristics may correspond to a respective possible length of a cable to which the receiver **16** may be coupled. Each of these characteristics may be pre-computed according to the following procedure.

(a) First, a desired equalizer output signal profile may be determined. This equalizer output signal profile may be represented as a sequence of digital samples and will hereinafter referred to with the symbol "A". FIG. **4** is a graphical representation of one example of a desired equalizer output signal profile. It will be observed that the desired output signal profile has a "trough" indicated at **81** in FIG. **4**. In practice this trough may be eliminated by functioning of the above-mentioned IIR filter **62**.

(b) Next, for a particular length of cable, an anticipated equalizer input signal may be generated. This may be done by transmitting a test signal (e.g., a sequence of "0" value signals followed by a sequence of "1" value signals) via a cable having the particular length in question and receiving the resulting signal (including ISI) at the output end of the cable, and analog-to-digital converting the signal at the output end of the cable to generate the anticipated equalizer input signal, which will hereinafter be referred to with the symbol "B". The A/D conversion of the output signal from the cable may entail over-sampling, i.e., sampling at a higher rate than the operating rate of the analog-to-digital converter **44** incorporated in the receiver **16**.

(c) A deconvolution operation may then be performed with respect to the signals A, B to produce a set of coefficients C. The deconvolution may be performed, for example, by a least squares technique. The resulting coefficients may, in some embodiments, be quantized and/or the number of coefficients may be reduced to obtain a desired degree of precision.

(d) The resulting set of coefficients C may then be stored in the storage unit **80** as the pre-computed equalizer characteristic that corresponds to the cable length used in operation (b).

This procedure may then be repeated for other lengths of cable. The same desired equalizer output signal profile A may be used for all of the different lengths of cable. In some embodiments, the number of pre-computed equalizer characteristics stored in the storage unit **80** may be eight, with the pre-computed equalizer characteristics respectively corresponding to a range of cable lengths from very short (virtually "zero") to a maximum length which may be about 180 meters. In other embodiments, more or fewer than eight pre-computed equalizer characteristics may be stored in the storage unit **80**. For example, in some embodiments, three pre-computed equalizer characteristics may be stored. (Storage of the respective coefficient sets C for each of the different cable lengths may not occur until all of the coefficient sets C have been determined.)

As indicated at **82** in FIG. **3**, the pre-computed FFE block also includes a capability for selecting one of the pre-computed equalizer characteristics stored in the storage unit **80** on the basis of a signal received by the selection unit **82** from the AGC circuit **46** (FIG. **2**A). For this purpose the selection unit **82** is coupled to the AGC circuit **46** to receive from the AGC circuit **46** a signal that is indicative of the approximate length of the cable **20** to which the receiver **16** is coupled. In some embodiments, the selection unit **82** may include a lookup table (not separately shown) to select one of the pre-computed equalizer characteristics stored in the storage unit **80** on the basis of an index signal that is indicative of the approximate length of the cable **20**. The index signal may be provided in suitable form from the AGC circuit **46** or may be derived by the selection unit **82** from a signal provided by the AGC circuit **46**. Such a lookup table may also constitute all or part of the storage unit **80**.

Alternatively, a circuit or device other than the AGC circuit **46** may provide to the pre-computed FFE block **48** side information indicative of the length of the cable **20**.

As indicated at **84** in FIG. **3**, the pre-computed FFE block further includes a capability for applying the pre-computed equalizer characteristic selected by the selection unit **82** to the signal output from the analog-to-digital converter **44** (FIG. **2**A). For this purpose the equalizer unit **84** of the pre-computed FFE block **48** is coupled to the analog-to-digital converter **44** and is responsive to the selection unit **82** of the pre-computed FFE block **48**. The at least partially equalized output from the equalizer unit **84** is provided to the summing block **54** (FIG. **2**A).

In operation, the sending device **18** (FIG. **1**) transmits a signal via the communication channel (cable) **20** to the computer system **12**. The signal transmitted by the sending device **18** may, for example, be in accordance with the Gigabit Ethernet protocol. The signal transmitted by the sending device **18** experiences inter-symbol interference (ISI) while passing through the communication channel **20**, and is received at the receiver **16** of the computer system **12**. More specifically, referring to FIG. **2**A, the signal is received via the line interface **40** of the receiver **16** and is conditioned by the receiver analog front end electronics **42**. The conditioned signal is converted to a sequence of digital samples by the analog-to-digital converter **44**. The resulting sequence of digital samples is supplied to all three of the AGC circuit **46**, the pre-computed FFE block **48** and the adaptive FFE **52**. On

the basis of the sequence of digital samples, the AGC circuit **46** performs automatic gain control, and also determines an approximate length of the cable **20** (as indicated at **100** in FIG. **5**). The AGC circuit provides to the pre-computed FFE block **48** a signal that is indicative of the approximate length of the cable **20**. This signal is received by the selection unit **82** (FIG. **3**) of the pre-computed FFE block **48**.

On the basis of the signal received from the AGC circuit **46** (i.e., on the basis of the approximate length of the cable **20**, as determined by the AGC circuit **46**), the selection unit **82** selects one of the pre-computed equalizer characteristics that are stored in the storage unit **80** of the pre-computed FFE block **48**. The pre-computed equalizer characteristic selected by the selection unit **82** may be a characteristic that corresponds to the approximate length of the cable **20**. The selection of the pre-computed equalizer characteristic may occur by accessing a lookup table on the basis of the signal provided by the AGC circuit **46**. In some embodiments, hysteresis may be introduced in the functioning of the selection unit **82** to aid in prevention of toggling between two adjacent cable lengths. (Selection of the pre-computed equalizer characteristic from among the pre-computed equalizer characteristics stored in the storage unit **80** is indicated at **102** in FIG. **5**.)

The equalizer unit **84** of the pre-computed FFE block **48** applies the pre-computed equalizer characteristic selected by the selection unit **82** to the incoming signal for the receiver **16**. It will be understood that the incoming signal is represented by the sequence of digital samples provided by the analog-to-digital converter **44**. The application of the selected pre-computed equalizer characteristic may be in the form of digital filtering of the sequence of digital samples in accordance with the selected pre-computed equalizer characteristic. The resulting equalized (or partially equalized) signal is provided from the equalizer unit of the pre-computed FFE block **48** to be one of the inputs of the summing block **54**. (Application of the selected pre-computed FFE equalizer characteristic is indicated at **104** in FIG. **5**.)

The adaptive FFE **52** also receives the sequence of digital samples provided by the analog-to-digital converter and performs adaptive equalization of the incoming signal represented by the sequence of digital samples on the basis of an error signal provided to the adaptive FFE **52** from the signal slicer block **56**. The adaptive FFE **52** may operate generally in accordance with conventional principles. However, because of the relatively high degree of equalization provided by the pre-computed FFE block **48**, the adaptive FFE **52** may converge more rapidly, and/or may require less hardware (e.g., fewer gates) than would be the case where a pre-computed FFE is applied to the incoming signal without considering the length of the cable **20**. (As is indicated at **104** in FIG. **5**, the application of the adaptive FFE is performed in parallel with application of the pre-computed equalizer characteristic by the pre-computed FFE block.)

The partially equalized signal output from the adaptive FFE **52** is also supplied to the summing block **54** as one of the inputs for the summing block **54**.

In addition to receiving the outputs from the pre-computed FFE block **48** and from the adaptive FFE **52**, the summing block **54** also receives as inputs signals that are output respectively from the IIR filter **62** (FIG. **2**B) and from the DFE **60** (FIG. **2**B). The summing block **54** sums these four input signals and provides the resulting sum signals to the signal slicer block **56** (FIG. **2**B). The output from the summing block **54** may also be provided (as indicated at **86** in FIG. **2**B) to the digital signal processor **14** (FIG. **1**) via, for example, a Viterbi decoder which is not shown.

Referring to FIG. **2**B, the signal slicer block **56** compares the sum signals to an expected profile for the incoming signal as it is expected to appear after equalization (i.e., largely free of ISI). On the basis of this comparison, the signal slicer block **56** outputs a data signal to the DFE **60** and to the IIR filter **62**. The signal slicer block **56** also outputs an error signal to the adaptive FFE **52** and to the DFE **60**. As noted before, the adaptive FFE **52** operates adaptively to equalize the incoming signal on the basis of the error signal provided by the signal slicer block **56**. The DFE **60** also performs an adaptive equalization function on the basis of the error signal provided by the signal slicer **56**. The equalization function performed by the DFE **60** is applied to the data signal output from the signal slicer block **56**, but has the effect of contributing to the equalization of the incoming signal. The output of the DFE **60** is provided to the summing block **54** as one of the inputs summed by the summing block **54**.

The IIR filter **62** performs filtering with respect to the data signal output from the signal slicer block **56**. As noted above, the IIR filter may be integrated with the Viterbi decoder. The filtered signal output from the IIR filter is also provided to the summing block **54** as one of the inputs summed by the summing block **54**.

By selecting a pre-computed FFE characteristic on the basis of estimated cable length, or based on another channel characteristic, and applying the selected pre-computed FFE characteristic in parallel with an adaptive FFE, it may be possible for the adaptive FFE to converge more quickly than if the same pre-computed FFE characteristic were used regardless of the cable length or channel characteristic. In addition, it may be possible to provide the adaptive FFE using less hardware (e.g., fewer gates) than would be the case if a fixed pre-computed equalizer were used. The more rapid convergence that may be possible with the selected pre-computed FFE characteristic may also result in savings in power consumption, which may be of particular value if the computer system **12** is implemented as a laptop computer or other mobile device.

As an alternative to arranging the pre-computed FFE in parallel with the adaptive FFE, the pre-computed FFE and the adaptive FFE may be arranged in series.

In the above-described embodiments, detection of cable length is performed by an AGC circuit. Alternatively, other techniques, such as time domain reflectometry, may be employed to determine the approximate length of the cable.

In other embodiments, selection of one of a number of stored pre-computed equalizer characteristics may be performed on the basis of a channel characteristic other than cable length. For example, various types of channels may be tested in advance to determine suitable FFE characteristics therefor, and when it is determined to which one of the channel types the computer system is coupled, the suitable FFE characteristic for that type of channel may be selected. In still other embodiments, the number of "stubs" in the communication channel may be detected, and a suitable pre-computed FFE characteristic may be selected on that basis.

Selection of a pre-computed equalizer characteristic based on a channel characteristic may be performed with respect to virtually any communication channel that has an impulse response that varies with a physical characteristic. For example, selection of a pre-computed equalizer characteristic based on a channel characteristic may be used in

conjunction with a Gigabit Ethernet channel, a Fast Ethernet channel or a 10 Gigabit Ethernet channel, as well as other types of channels.

Selection of a pre-computed equalizer characteristic based on a channel characteristic may be employed for equalizers other than a feed forward equalizer. For example, a pre-computed equalizer characteristic for a decision feedback equalizer, an infinite impulse response filter, a Kalman filter or a lattice filter may, in some embodiments, be selected based on a channel characteristic.

As used herein and in the appended claims, "equalizer characteristic" shall be understood to include a set of coefficients such as a set of filter coefficients, as well as other information and/or signals that are determinative of a frequency response of an equalizer.

The several embodiments described herein are solely for the purpose of illustration. The various features described herein need not all be used together, and any one or more of those features may be incorporated in a single embodiment. Therefore, persons skilled in the art will recognize from this description that other embodiments may be practiced with various modifications and alterations.

What is claimed is:

1. A method comprising:

determining a characteristic of a communication channel, wherein the communication channel includes a cable and the determined characteristic of the communication channel is an approximate length of the cable;

selecting, on the basis of the determined characteristic, a pre-computed equalizer characteristic for application to signals received via the communication channel, wherein the selecting includes selecting a pre-computed feed forward equalizer (FFE) from among a plurality of pre-computed FFEs stored in a receiver coupled to the communication channel;

applying the selected pre-computed FFE to the signals received via the communication channel; and

applying an adaptive FFE, in parallel with the selected pre-computed FFE, to the signals received via the communication channel.

2. The method of claim **1**, wherein the approximate length of the cable is determined by an automatic gain control block.

3. An apparatus comprising:

a first circuit, to couple to a communication channel, to determine a characteristic of the communication channel, the communication channel including a cable, the first circuit to couple to the cable, the characteristic of the communication channel determined by the first circuit being an approximate length of the cable;

a second circuit, responsive to the first circuit, to select, on the basis of the determined characteristic, a pre-computed equalizer characteristic for application to signals received via the communication channel, the second circuit including circuitry to apply the selected pre-computed FFE to the signals received via the communication channel, wherein the second circuit stores a plurality of pre-computed feed forward equalizers (FFEs) and is capable of selecting one of the stored pre-computed FFEs on the basis of a signal received from the first circuit; and

a third circuit to apply an adaptive FFE, in parallel with the selected pre-computed FFE, to the signals received via the communication channel.

4. The apparatus of claim **3**, wherein the first circuit comprises an automatic gain control circuit.

5. An apparatus comprising:

first means, for coupling to a communication channel and for determining a characteristic of the communication channel, the communication channel including a cable, the first means being for coupling to the cable, the characteristic of the communication channel determined by the first means being an approximate length of the cable;

second means, responsive to the first means, for selecting, on the basis of the determined characteristic, a pre-computed equalizer characteristic for application to signals received via the communication channel;

means for storing a plurality of pre-computed feed forward equalizers (FFEs), wherein the second means includes means for selecting one of the stored pre-computed FFEs on the basis of a signal received from the first means;

means for applying the selected pre-computed FFE to the signals received via the communication channel; and

means for applying an adaptive FFE, in parallel with the selected pre-computed FFE, to the signals received via the communication channel.

6. The apparatus of claim **5**, wherein the first means comprises an automatic gain control circuit.

7. An apparatus comprising:

interface means for coupling to a cable;

storing means for storing a plurality of pre-computed feed forward equalizer (FFE) characteristics;

automatic gain control (AGC) means coupled to the interface means for applying gain control to signals received via the cable and for determining an approximate length of the cable;

selection means, coupled to the AGC means and to the storing means, for selecting one of the stored pre-computed FFE characteristics on the basis of a signal received from the AGC means, the signal received from the AGC means indicating the approximate length of the cable;

first equalizer means, responsive to the selection means and coupled to the interface means, for equalizing the signals received via the cable on the basis of the pre-computed FFE characteristic selected by the selection means; and

second equalizer means, coupled to the interface means in parallel with the first equalizer means, for adaptively equalizing the signals received via the cable.

8. The apparatus of claim **7**, wherein each of the pre-computed FFE characteristics stored by the storing means corresponds to a respective cable length.

9. The apparatus of claim **8**, wherein the storing means stores eight pre-computed FFE characteristics.

10. The apparatus of claim **7**, wherein the interface means is for coupling to an Ethernet cable.

11. The apparatus of claim **7**, wherein the interface means is for coupling to a Gigabit Ethernet cable.

12. A system comprising:

a processor; and

a receiver coupled to the processor;

wherein the receiver includes:

a first circuit, to couple to a communication channel, to determine a characteristic of the communication channel, the communication channel including a cable, the first circuit to couple to the cable, the characteristic of the communication channel determined by the first circuit being an approximate length of the cable;

a second circuit, responsive to the first circuit, to select, on the basis of the determined characteristic, a pre-computed equalizer characteristic for application to signals received via the communication channel, the second circuit including circuitry to apply the selected pre-computed FFE to the signals received via the communication channel, wherein the second circuit stores a plurality of pre-computed feed forward equalizers (FFEs) and is capable of selecting one of the stored pre-computed FFEs on the basis of a signal received from the first circuit; and

a third circuit to apply an adaptive FFE, in parallel with the selected pre-computed FFE, to the signals received via the communication channel.

13. The system of claim **12**, wherein the first circuit comprises an automatic gain control circuit.

* * * * *