(19) Europäisches Patentamt
European Patent Office
Office européen des brevets

(11) EP 1 338 690 A1

(12) EUROPEAN PATENT APPLICATION

(43) Date of publication:
27.08.2003 Bulletin 2003/35

(51) Int Cl.[7]: **D04B 1/26**

(21) Application number: **03425068.8**

(22) Date of filing: **05.02.2003**

(84) Designated Contracting States:
AT BE BG CH CY CZ DE DK EE ES FI FR GB GR HU IE IT LI LU MC NL PT SE SI SK TR
Designated Extension States:
AL LT LV MK RO

(30) Priority: **26.02.2002 IT VE20020009**

(71) Applicant: **Nuovamav snc**
35015 Galliera Veneta, Padova (IT)

(72) Inventor: **Cusinato, Alessandro**
35014 Fontaniva, Padova (IT)

(54) **Process for making a knitted fabric and its product**

(57) In a process in order to obtain a knitted fabric (10) comprising the phases of passing over a row of simple stitches with the previous row of stitches, there is a phase wherein two threads (13a,13b) pass over respectively a left row (20) and a right row (22) which are separated and independent to each other, whereas the number of stitches per row is gradually reduced until it is reduced to zero so as to obtain a fabric with a "V" shape, the two sides (15,17) of the "V" shape forming a sole row (24) of stitches which are passed over, so generating a fabric surplus which produces a left wave (18) and a right wave (19).

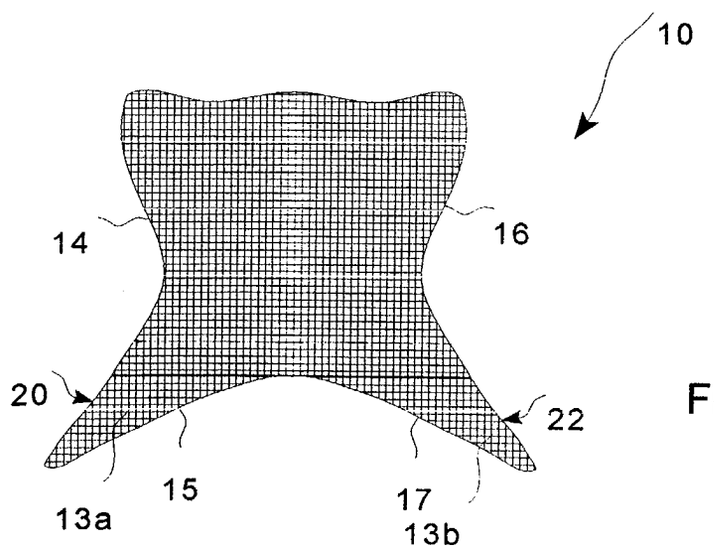

Fig. 3

EP 1 338 690 A1

Top Glory Ex. 1037
Top Glory v. Cole Haan
Page 00001

Description

[0001] The present invention relates to a process for making a knitted fabric and a product obtained with this process.

[0002] Is is known that the production of fabric differs according to the type of interlacements which may be obtained either with straight threads in a process of interlacing the threads of the warp together with the threads of the weft which are perpendicularly arranged to each other, so obtaining a weave or, otherwise, with a curvilinear thread by interlacing a thread by itself, so as to make a knitting weave.

[0003] In a knitting weave a sole thread or yarn is used which extends longitudinally and curvilinearly, so as to produce loops which form a line of simple stitches linked to the stitches of the previous line and, which will be linked to the stitches of the following line.

[0004] In the specific field, the loops are called stitches, the lines of stitches are called rows and the interlacement represents the passing over phase whereby, in the following, this specific terminology will be used.

[0005] The knitting manufacturing is made by using knitting machines or looms in which a support, called a needle bar, houses several needles placed side by side and parallel to each other, in order to pass over the stitches of the new row with the stitches of the previous row. The number of needles is, obviously, equal to the number of the stitches per row. In order to make the passing over phase, the needles are operated by a slidable carriage carrying a cam element which by pressing onto the end of the needles, generates a forward and a backward movement of the needles.

[0006] By using these machines, it is also possible to generate a decrease or an increase of the fabric, namely it is possible to obtain shaped fabrics. For example, it is is possile to widen a fabric (called "increase") by inserting other needles which are placed side by side to those placed at the ends; similarly, it is possible to reduce the fabric (called "decrease") by removing the needles which are placed at the ends.

[0007] In order to make stockings or the upper part of a shoe, it is necessary to build the different parts or shapes of the stocking or footwear and, then, to join them together by sewing.

[0008] Each part may be obtained starting from a rectangular fabric and cutting from it the component parts of the stocking or footwear, thus producing scraps; or, they may be directly obtained by using the increase and decrease technique, thus avoiding wastage.

[0009] In any case, the flat parts so obtained have to be sewed to one another, along different joining lines.

[0010] Subsequently, in order that the stocking or footwear perfectly takes the three-dimensional shape, it is necessary to carry out an operation of stretching which makes it possible to obtain in a definitive and uniform way a boot-like shape.

[0011] It is evident that all the above described operations, with particular reference to the decreases and increases, sewing and stretching operations, are long and expensive, above all if we think that such operations have to be carried out many times, and for each of the component part of the stocking or footwear.

[0012] The aim of the invention is, therefore, to devise a process in order to obtain a knitted fabric which eliminates the above-mentioned drawbacks.

[0013] In particular the aim is to obtain a fabric in one piece from which it is possible to directly make the stocking or footwear, namely a fabric which has the necessary geometrical characteristics so that, once it has been folded, it directly forms the stocking or footwear.

[0014] The aim is reached by a process for making a knitted fabric comprising the phases of:

a) preparing at least a first thread which forms a first row of stitches arranged along a line placed between a left side edge and a right side edge;
b) passing over said at least a first thread with said stitches starting from said left side edge until said right side edge, thus forming a second row of stitches;
c) passing over said at least a first thread with said second row of stitches starting from said right side edge until said left side edge, thus forming a third row of simple stitches;
d) repeating the operation of phases b) and c) until to obtain a last row of stitches;
characterized in that it comprises the other following phases:
e) preparing at least two threads, a second thread which passes over the stitches of the last row placed between said left side edge and a first central edge placed in the middle of said last row or near said middle on the side of said left side edge, thus defining a left row of stitches and a third thread which passes over the stitches of the last row placed between said right side edge and a second central edge placed in the middle of said last row or near said middle on the side of said right side edge, thus defining a right row of stitches, the passing over operation of the same rank of left row and right row is carried out at the same time and, moreover, while proceeding with the rows of the subsequent rank, said first central edge is gradually moved towards the left side edge, thus reducing the number of stitches of the left row until the number of stitches becomes zero or almost zero, and said second central edge is gradually moved towards the right side edge, thus reducing the number of stitches of the right row until the number of stitches becomes zero or almost zero, thus obtaining a fabric with a "V" shape wherein the two "V" sides are formed by said first and second central edge;
f) repeating the passing over phases a) and b), by passing over, with a sole row, the stitches of the two "V" sides with said first thread, so that in this way

the fabric surplus produced by said second and third thread respectively forms a left wave in the left part and a right wave in the right part.

[0015] By this process, it is therefore possible to produce a one-piece fabric which has suitably shaped side edges (by increasing or decreasing the fabric) and, at the area corresponding to the instep of the foot and starting from the middle towards the two opposite side edges, it has an amount of fabric in excess, which is more in excess as the distance from the middle increases, so as to form two waves. In such way, the stocking or footwear is directly obtained by wrapping the fabric in a boot-like manner and carrying out a simple sewing in order to join the two side edges.

[0016] In this way, the cutting and sewing operations for each different parts of the stocking or footwear are avoided, and also the subsequent stretching operation.

[0017] In particular, during the passing over phase of the left and right row, a pulling force is applied to the fabric already obtained, so as to constantly maintain it in tension.

[0018] In such a way the fabric, so obtained, can be made into a stocking or a footwear which is form-fitting to the foot or the leg of a person.

[0019] These and other advantages of the present invention will be more evident by the following detailed description given for an exemplifying and not limiting purpose with reference to the following drawings, wherein:

- figure 1 is a top view of the fabric obtained by the process of the present invention;
- figures 2, 3, 4 and 5 are top views of the fabric represented in subsequent phases of manufacturing.

[0020] In figure 1, there is illustrated a fabric 10 in order to obtain a stocking or a footwear with the process of the present invention. Figures 2 to 5, illustrate the various phases of the process in order to produce the fabric 10, starting from the top of the stocking or the upper part of the footwear.

[0021] At the beginning, the knitting weaving is carried out in the usual manner, namely a first thread 11 creates a first row of stitches and subsequently, with a second run, a second row of stitches are formed which are passed over with the stitches of the first row and so on, until arriving at the last row 12 of stitches near the part corresponding to the instep of the foot. Therefore, the fabric represented in figure 2 is so obtained, wherein decreases and increases operations have been made, so that the boot-leg, which is defined by a left side edge 14 and a right side edge 16, may fit to the lower part of the leg.

[0022] At this point, the first thread 11 is stopped and a second thread 13a and a third thread 13b are prepared in order to start again the knitting, which now occurs by dividing the last row 12 of stitches in two parts: a left row 20 placed between the left side edge 14 and a first central edge 15 placed near the middle on the side of the left side edge 14 and a right row 22 placed between the right side edge 16 and a second central edge 17 placed near the middle on the side of the right side edge 17.

[0023] Obviously, since the two rows are independent to each other, it is necessary to have at least two threads: the second thread 13a in order to form the left rows 20 and the third thread 13b in order to form the right rows 22.

[0024] The operation of carrying out the left rows 20 and the right rows 22 occurs simultaneously, therefore, as for example, the stitches of the left row of the third rank are passed over at the same time as the stitches of the right row of the third rank are also passed over.

[0025] As the left rows 20 and the right rows 22 are executed, the first central edge 15 is gradually moved to the left side, so as to reduce the number of stitches per row; similarly, the second central edge 17 is gradually moved to the right side, so as to reduce the number of stitches per row.

[0026] During this phase, the stitches of the row just formed are pressed downwards by means of a suitable device that is a presser bar which produces a pressure onto the stitches in order to hold the row of stitches just formed in the correct position. At the same time, upon the fabric already formed, a pulling force is applied which is uniformly distributed along its entire length by means a device, i.e. a tension bar, so as to maintain the fabric constantly in tension.

[0027] As the process is going on, since the central edges are moved towards the ends, an increasing number of stitches not passed over are formed.

[0028] While continuing with the knitting, at a certain moment the number of stitches per row becomes zero or almost zero, thus obtaining a fabric which forms, if it should be laid down on a plane, a "V", as represented in figure 3, wherein the two "V" sides are made by the first and the second central edges 15 and 17.

[0029] In practice, since the stitches are blocked by the straight needle bar of the machine, the fabric in progress is arranged as shown in figure 4, wherein the stitches of the two "V" sides, that is the first 15 and the second 17 central edge define the last row of stitches arranged in a straight line which is identified in figure with reference 24.

[0030] Therefore, the fabric has, on the left side and on the right side, a material in excess to form a left wave 18 and a right wave 19.

[0031] Finally, the stitches of the last row 24 are passed over with a sole thread and, precisely, with the first thread 11 (starting from the situation represented in figure 4) which starts again and, as previously described, forms subsequent rows of stitches. The fabric 10 depicted in figure 5 is so obtained.

[0032] When the knitting operation is ended, it is sufficient to put the left side edge 14 in contact with the right side edge 16 and joining them by sewing, thus obtaining

a stocking or a footwear with a perfect and uniform shape.

[0033] The first thread 11, the second thread 13a and the third thread 13b are preferably elastic threads which may be either of natural material like latex, or synthetic material like lycra.

[0034] As shown in figure 3, at the same time the left rows 20 and the right rows 22 are carried out, an increase also occurs, and therefore new needles are added to the left row 20, the left stitches increase and then the left side edge 14 moves towards the left; similarly, new needles are added to the right row 22, the right stitches increase and then the right side edge 16 moves towards the right.

[0035] The increase during the carrying out of the left row 20 and the right row 22 is necessary in order to obtain the part of the fabric which covers the heel; in fact, the central part of the fabric covers the instep of the foot, whereas the two side parts, once they are joined together, have to cover the opposite part to the instep of the foot, that is the heel.

[0036] Obviously, all the functionally or conceptually equivalent changes or modifications fall inside the protection field of the present invention.

[0037] For example, it is possible to repeat the passing over phases by means of left rows and right rows independent to each other, interspersed with passing over phases along a sole row, so as to follow the shape of the foot instep in a better way.

[0038] Obviously, the described process may be used in order to manufature other clothing articles, and not exclusively stockings or footwear In general, this process may involve all those articles which cover parts of the body which have angular shapes, as for example orthopaedic and medical-sanitary articles which cover different parts of the body, such as elbows and shoulders.

[0039] Furthermore, instead to use a sole thread 13a in order to form the left rows and a sole thread 13b in order to form the right rows, a greater number of threads can be used, so as to increase the productivity or, otherwise, the design when, for example, different colours of threads are used.

[0040] In the same way, instead of using a sole thread 11 in order to form the initial or the final part of the fabric, a greater number of threads can be used.

[0041] The process is carried out conveniently using a knitting machine and, in particular, a machine with a straight needle bar.

[0042] The protection field of the invention extends also to the use of any machine in order to carry out the above process, as well as the fabric obtained by carrying out the process of the present invention.

Claims

1. A process for making a knitted fabric (10) comprising the phases of:

a) preparing at least a first thread (11) which forms a first row of stitches arranged along a line placed between a left side edge (14) and a right side edge (16);
b) passing over said at least a first thread (11) with said stitches starting from said left side edge (14) until said right side edge (16), thus forming a second row of stitches;
c) passing over said at least a first thread (11) with said second row of stitches starting from said right side edge (16) until said left side edge (14), thus forming a third row of simple stitches;
d) repeating the operation of phases b) and c) until to obtain a last row (12) of stitches;

characterized in that it comprises the other following phases:

e) preparing at least two threads, a second thread (13a) which passes over the stitches of the last row (12) placed between said left side edge (14) and a first central edge (15) placed in the middle of said last row or near said middle on the side of said left side edge (14), thus defining a left row (20) of stitches and a third thread (13b) which passes over the stitches of the last row (12) placed between said right side edge (16) and a second central edge (17) placed in the middle of said last row or near said middle on the side of said right side edge (16), thus defining a right row (22) of stitches, the passing over operation of the same rank of left row (20) and right row (22) is carried out at the same time and, moreover, while proceeding with the rows of the subsequent rank, said first central edge (15) is gradually moved towards the left side edge (14), thus reducing the number of stitches of the left row (20) until the number of stitches becomes zero or almost zero, and said second central edge (17) is gradually moved towards the right side edge (16), thus reducing the number of stitches of the right row (22) until the number of stitches becomes zero or almost zero, thus obtaining a fabric with a "V" shape wherein the two "V" sides are formed by said first and second central edge (15,17);
f) repeating the passing over phases a) and b), by passing over, with a sole row (24), the stitches of the two "V" sides with said first thread (11), so that in this way the fabric surplus produced by said second (13a) and third (13b) thread respectively forms a left wave (18) in the left part and a right wave (19) in the right part.

2. Process according to claim 1, **characterized in that** as the rank of the left rows (20) and the right rows (22) increases, new stitches are added at the

left end of the left row (20), thus moving said left side edge (14) towards the left and, at the same time, new stitches are added at the right end of the right row (22), thus moving said right side edge (16) towards the right, so as to obtain an increased fabric.

3. Process according to claim 1, **characterized in that** as the rank of the left rows (20) and the right rows (22) increases, the stitches on the left end of the left row (20) are decreased, thus moving said left side edge (14) towards the right and, at the same time, the stitches on the right end of the right row (22) are decreased, thus moving said right side edge (16) towards the left, so as to obtain a decreased fabric.

4. Process according to any of the previous claims, **characterized in that** in the phase f) two threads are prepared in order to obtain said left rows (20) and another two threads in order to obtain said right rows (22), in order to make a Jacquard knitting.

5. Process according to any of the previous claims, **characterized in that** during the phase e), namely during the passing over operation of said left (20) and right (22) rows, the stitches in progress are pressed downwards.

6. Process according to any of the previous claims, **characterized in that** during the phase e), namely during the passing over operation of said left (20) and right (22) rows, a pulling force is applied to the fabric already formed, in order to maintain it under a constant tension.

7. Process according to any of the previous claims, **characterized in that** phases e) and f), are repeated more than one time and they are alternated with phases a) and b).

8. Process according to any of the previous claims, **characterized in that** it is carried out by using a knitting machine.

9. Process according to claim 7, **characterized in that** said knitting machine has a straight needle bar.

10. Process according to claims 5 and 8, **characterized in that** said stitches in progress are pressed downwards by a presser device.

11. Process according to claims 8, **characterized in that** said pulling force applied to the fabric, according to claim 6, is exerted by a tension device.

12. Process according to any of the previous claims, **characterized in that** said at least first thread (11), said second thread (13a) and said third thread (13b) are elastic.

13. Process according to claim 12, **characterized in that** said elastic threads are made of latex or lycra.

14. Knitted fabric obtained by the process according to any of the previous claims.

15. Knitted fabric according to claim 14, **characterized in that** it is a product (10) designed to cover a joint of the human body.

16. Knitted fabric according to claim 15, **characterized in that** said fabric is a stocking (10) or a footwear which suitably covers the instep of a foot.

17. Knitted fabric according to claim 15, **characterized in that** said fabric is an orthopaedic or a medical-sanitary article, such as knee-bands or the like.

18. Use of a knitting machine in order to carry out the process according to any of the claims 1 to 13.

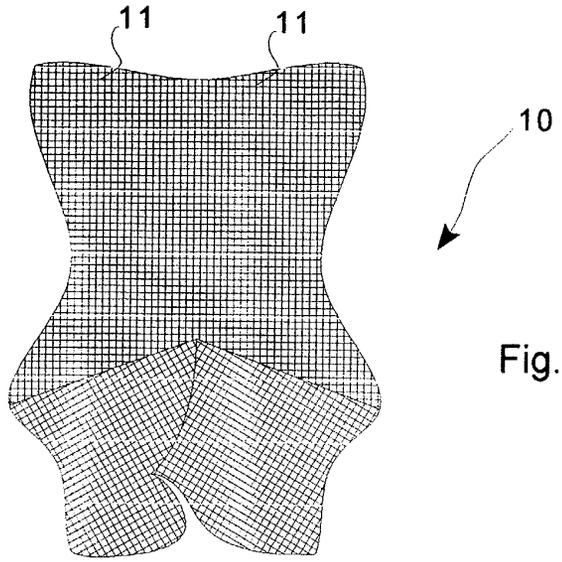

Fig. 1

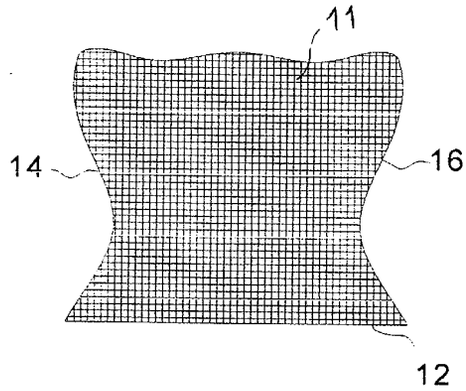

Fig. 2

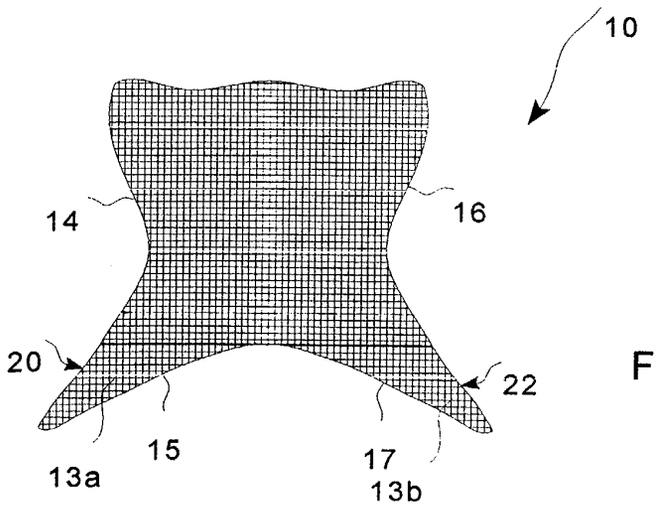

Fig. 3

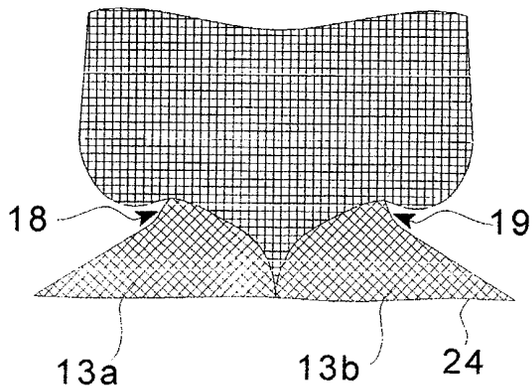

Fig. 4

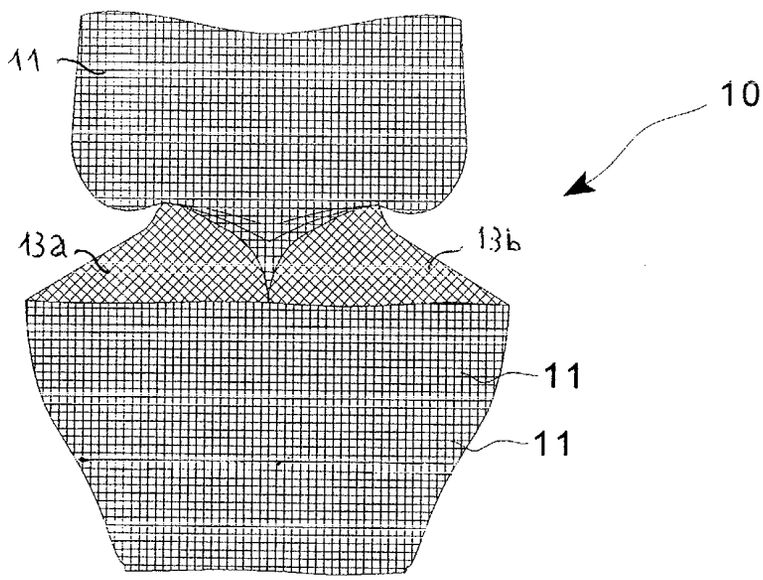

Fig. 5

European Patent Office

EUROPEAN SEARCH REPORT

Application Number
EP 03 42 5068

DOCUMENTS CONSIDERED TO BE RELEVANT

Category	Citation of document with indication, where appropriate, of relevant passages	Relevant to claim	CLASSIFICATION OF THE APPLICATION (Int.Cl.7)
Y	EP 0 490 694 A (SHIMA SEIKI MFG) 17 June 1992 (1992-06-17) * the whole document * ---	1-13,18	D04B1/26
Y	GB 2 097 431 A (SHIMA IDEA CENTER CO LTD) 3 November 1982 (1982-11-03) * page 8, line 20-31 * ---	1-13,18	
X	US 2 334 206 A (HERBERT KNOHL) 16 November 1943 (1943-11-16) * page 2, column 1, line 8-21; figures 1,2 * -----	14-17	

TECHNICAL FIELDS SEARCHED (Int.Cl.7)
D04B

The present search report has been drawn up for all claims

Place of search	Date of completion of the search	Examiner
MUNICH	13 June 2003	Sterle, D

CATEGORY OF CITED DOCUMENTS

X : particularly relevant if taken alone
Y : particularly relevant if combined with another document of the same category
A : technological background
O : non-written disclosure
P : intermediate document

T : theory or principle underlying the invention
E : earlier patent document, but published on, or after the filing date
D : document cited in the application
L : document cited for other reasons

& : member of the same patent family, corresponding document

EPO FORM 1503 03.82 (P04C01)

ANNEX TO THE EUROPEAN SEARCH REPORT ON EUROPEAN PATENT APPLICATION NO. EP 03 42 5068

This annex lists the patent family members relating to the patent documents cited in the above-mentioned European search report.
The members are as contained in the European Patent Office EDP file on
The European Patent Office is in no way liable for these particulars which are merely given for the purpose of information.

13-06-2003

Patent document cited in search report		Publication date	Patent family member(s)			Publication date
EP 0490694	A	17-06-1992	JP	2538421	B2	25-09-1996
			JP	4214448	A	05-08-1992
			DE	69121857	D1	10-10-1996
			DE	69121857	T2	23-01-1997
			EP	0490694	A1	17-06-1992
			ES	2091304	T3	01-11-1996
			KR	214756	B1	02-08-1999
			US	5417088	A	23-05-1995
GB 2097431	A	03-11-1982	JP	1402835	C	28-09-1987
			JP	57183451	A	11-11-1982
			JP	62008542	B	23-02-1987
			CH	661299	A5	15-07-1987
			DE	3214536	A1	11-11-1982
			IT	1151342	B	17-12-1986
			US	4442683	A	17-04-1984
US 2334206	A	16-11-1943	NONE			

EPO FORM P0459

For more details about this annex : see Official Journal of the European Patent Office, No. 12/82