PCT WORLD INTELLECTUAL PROPERTY ORGANIZATION
International Bureau

INTERNATIONAL APPLICATION PUBLISHED UNDER THE PATENT COOPERATION TREATY (PCT)

(51) International Patent Classification 7 : H04L 12/28 — A1

(11) International Publication Number: WO 00/64106

(43) International Publication Date: 26 October 2000 (26.10.00)

(21) International Application Number: PCT/US00/10735

(22) International Filing Date: 20 April 2000 (20.04.00)

(30) Priority Data:
60/130,418 — 21 April 1999 (21.04.99) — US
09/334,840 — 17 June 1999 (17.06.99) — US

(71) Applicant: TRANSCEPT, INC. [US/US]; 955 Perimeter Road, Manchester, NH 03103 (US).

(72) Inventors: GREENWOOD, Ken, C.; 7 Cardinal Court, Bedford, NH 03824 (US). BIANCHI, Charles, H.; 2 Sunnyside Drive, Durham, NH 03824 (US). SABAT, John, Jr.; 16 Hansom Drive, Merrimack, NH 03054 (US).

(74) Agents: THIBODEAU, David, J., Jr. et al.; Hamilton, Brook, Smith & Reynolds, P.C., Two Militia Drive, Lexington, MA 02421 (US).

(81) Designated States: AE, AG, AL, AM, AT, AU, AZ, BA, BB, BG, BR, BY, CA, CH, CN, CR, CU, CZ, DE, DK, DM, DZ, EE, ES, FI, GB, GD, GE, GH, GM, HR, HU, ID, IL, IN, IS, JP, KE, KG, KP, KR, KZ, LC, LK, LR, LS, LT, LU, LV, MA, MD, MG, MK, MN, MW, MX, NO, NZ, PL, PT, RO, RU, SD, SE, SG, SI, SK, SL, TJ, TM, TR, TT, TZ, UA, UG, UZ, VN, YU, ZA, ZW, ARIPO patent (GH, GM, KE, LS, MW, SD, SL, SZ, TZ, UG, ZW), Eurasian patent (AM, AZ, BY, KG, KZ, MD, RU, TJ, TM), European patent (AT, BE, CH, CY, DE, DK, ES, FI, FR, GB, GR, IE, IT, LU, MC, NL, PT, SE), OAPI patent (BF, BJ, CF, CG, CI, CM, GA, GN, GW, ML, MR, NE, SN, TD, TG).

Published
With international search report.
Before the expiration of the time limit for amending the claims and to be republished in the event of the receipt of amendments.

(54) Title: LICENSED BAND ADAPTATIONS

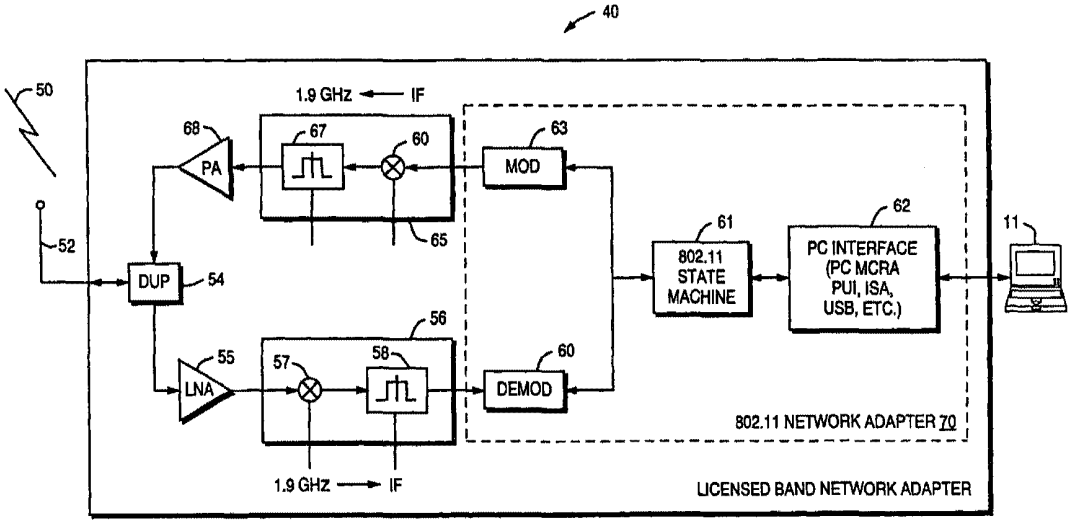

(57) Abstract

A technique for providing wireless data access over a licensed cellular radio frequency such as the Personal Communication Services (PCS) band. A wireless local area network (LAN) compliant transceiver, such as compatible with the IEEE 802.11 standard, has a modified final radio frequency (RF) output stage and filtering to shift its frequency of operation from an unlicensed Industrial Science and Medical (ISM) band to comply with PCS band requirements. In the preferred embodiment, the 802.11 compliant transceiving normally operating in an unlicensed band at 2.4 GHz is modified so that its RF portion operates instead within a PCS channel in the 1.9 GHz band. The devices can be deployed as wireless network access points and wireless network adapters operating in the licensed bands, such as by the holders of PCS licenses, to provide a wireless Internet service provider (ISP) type of service over what would otherwise be unused PCS channels.

 GOOGLE EXHIBIT 1027

FOR THE PURPOSES OF INFORMATION ONLY

Codes used to identify States party to the PCT on the front pages of pamphlets publishing international applications under the PCT.

AL	Albania	**ES**	Spain	**LS**	Lesotho	**SI**	Slovenia
AM	Armenia	**FI**	Finland	**LT**	Lithuania	**SK**	Slovakia
AT	Austria	**FR**	France	**LU**	Luxembourg	**SN**	Senegal
AU	Australia	**GA**	Gabon	**LV**	Latvia	**SZ**	Swaziland
AZ	Azerbaijan	**GB**	United Kingdom	**MC**	Monaco	**TD**	Chad
BA	Bosnia and Herzegovina	**GE**	Georgia	**MD**	Republic of Moldova	**TG**	Togo
BB	Barbados	**GH**	Ghana	**MG**	Madagascar	**TJ**	Tajikistan
BE	Belgium	**GN**	Guinea	**MK**	The former Yugoslav	**TM**	Turkmenistan
BF	Burkina Faso	**GR**	Greece		Republic of Macedonia	**TR**	Turkey
BG	Bulgaria	**HU**	Hungary	**ML**	Mali	**TT**	Trinidad and Tobago
BJ	Benin	**IE**	Ireland	**MN**	Mongolia	**UA**	Ukraine
BR	Brazil	**IL**	Israel	**MR**	Mauritania	**UG**	Uganda
BY	Belarus	**IS**	Iceland	**MW**	Malawi	**US**	United States of America
CA	Canada	**IT**	Italy	**MX**	Mexico	**UZ**	Uzbekistan
CF	Central African Republic	**JP**	Japan	**NE**	Niger	**VN**	Viet Nam
CG	Congo	**KE**	Kenya	**NL**	Netherlands	**YU**	Yugoslavia
CH	Switzerland	**KG**	Kyrgyzstan	**NO**	Norway	**ZW**	Zimbabwe
CI	Côte d'Ivoire	**KP**	Democratic People's	**NZ**	New Zealand		
CM	Cameroon		Republic of Korea	**PL**	Poland		
CN	China	**KR**	Republic of Korea	**PT**	Portugal		
CU	Cuba	**KZ**	Kazakstan	**RO**	Romania		
CZ	Czech Republic	**LC**	Saint Lucia	**RU**	Russian Federation		
DE	Germany	**LI**	Liechtenstein	**SD**	Sudan		
DK	Denmark	**LK**	Sri Lanka	**SE**	Sweden		
EE	Estonia	**LR**	Liberia	**SG**	Singapore		

LICENSED BAND ADAPTATIONS

BACKGROUND OF THE INVENTION

This invention relates generally to data communications and in particular to a technique for providing wireless access to data networks over licensed personal communication services radio band.

One of the strong growth areas in communications products continues to be wireless systems. The cellular mobile telephone network in the United States was originally allocated a bandwidth in the 800-900 MHz range. In the past several years, the Federal Communications Commission (FCC) has held auctions for licenses for additional classes of cellular service known as Personal Communication Services (PCS). The rights to transmit in these frequency bands, ranging from 1850 to 1990 megaHertz (MHz) have been sold at a total price reaching billions of dollars to various entities. This environment, where there are now as many as seven license holders in a given Basic Trading Area (BTA), has led to a situation where many licensees are now competing to provide service on a cost effective basis, not only with one another, but also with the entrenched cellular mobile telephone service providers.

As a condition of maintaining their license to operate in these bands, PCS license holders are required to actually provide service before specified time deadlines. Unfortunately, the cost of deploying base transceiver station (BTS) equipment within a coverage area continues to be a hurdle, especially for small scale operators in areas of low population density. For example, the cost of building out a base station site may approach several hundred thousand dollars and

provide coverage over an area of only several square miles. In addition, when such services are first brought online, although the operators may have paid for access up to as much as 15 MHz of bandwidth, they may be using only as little as 1.25 MHz of bandwidth, in the case of those operators deploying Code Division Multiple Access (CDMA) type air interface equipment, or even as little as 30 kiloHertz (kHz), in the case of operators deploying Time Division Multiple Access (TDMA) equipment.

These wireless operators, therefore, continue to look for ways to generate revenue by providing additional services which may not be available to existing cellular mobile telephone network operators. One application with seemingly insatiable demand is the need for low cost access to data networks and, in particular, to the Internet, for applications such as World Wide Web access. Indeed, the situation for Internet service providers (ISPs) is quite perplexing. They are experiencing phenomenal demand in growth for their services. Many such service providers continue to have to cope with busy signal complaints from customers. The inability to provide unfettered access to their end users over the "last mile," that is, over the distance from the local central office to the user's home or business is critical to their operations. Although a number of competing technologies such as cable modems and digital subscriber line (xDSL) type services promise to provide additional physical pathways from the central distribution location to the user location, it is not all clear which of these wire-based technologies will emerge as the most dominant. In addition, such deployment of cable modems and xDSL services require the

installation of new physical coaxial and/or twisted pair cabling in the subscriber's home or business.

It has been recognized that it is possible to provide various classes of data communication services using the cellular mobile telephone network. Such systems, however, invariably layer the data services over the cellular physical layer signaling. They can also require custom modification of equipment to support the reformatting of data frames, for example, local area network (LAN) media access control (MAC) data frames, to be compatible for communication over the cellular network. In addition, the mobile units expected to operate in such a system must typically be fitted with customized modem equipment suitable for operation at cellular telephone frequencies to reconstruct such data frames. For example, see U.S. Patent No. 5,796,727 issued to Harrison et al. and assigned to International Business Machines Inc., entitled "Wide Area Wireless LAN Access."

Other technologies such as wireless local area networks (LANs) are beginning to become available. These systems make use of broadband digitally modulated signals in unlicensed radio bands such as the Industrial Science and Medical (ISM) radio bands. Indeed, certain organizations such as the Institute of Electrical and Electronic Engineers (IEEE) have specified wireless standards that operate much the same as wired LAN standards, specifying particular physical layer signaling, modulation, and power levels.

Wireless LANs have found use in certain business applications such as health care, retail, manufacturing, and warehousing applications. In these systems, a portable computer or personal digital assistant (PDA) is equipped with a wireless network adapter. A central

signal collection device, referred to as an access point, distributes wireless network signals to and from units located within its radio range. The access points then can distribute and receive such network signals over wire physical media to and from other internetworking devices such as repeaters (hubs), bridges, routers, and gateways, to provide interconnectivity to other wired data networks.

However, the range of such wireless LAN equipment is limited by how far the signals can travel over the air. Currently, the IEEE 802.11 standard, the most widely deployed wireless LAN standard, specifies power output levels that typically carry wireless LAN signals over a few hundred feet. To extend coverage beyond this limited range, it is presently necessary to provide a network of access points with overlapping radio ranges throughout the desired coverage area. The build out cost of such a network is similarly cost prohibitive, if not more so, than the situation faced by the holders of PCS licenses.

SUMMARY OF THE INVENTION

The present invention is a technique for implementing wireless connections between portable and other computing equipment and data networks. The system makes use of Personal Communication Services (PCS), or other cellular mobile telephone licensed band radio frequencies. However, rather than use an air interface scheme compatible with cellular mobile telephone standards, wireless local area network (LAN) format signaling, such as that only previously used in the unlicensed bands, is used.

As a result, the system components can be implemented by making use essentially of existing

wireless LAN computing equipment interface circuits, base band, and intermediate frequency (IF) circuits. The final stage of such radio circuits are band shifted from their typical operation in the unlicensed Industrial Science and Medical (ISM) band to operate at licensed band PCS frequencies. In addition, the output power levels of transmitting amplification and receiver signal detection equipment are adjusted to operate in a mode which is compatible with PCS service ranges. Both the wireless network adapter associated with the mobile computing equipment and the central access points can thus be manufactured at minimum cost.

For example, the IEEE 802.11 compliant wireless network adapters typically operate in the range of 2.4 gigahertz (GHz) and may have their final RF stage downbanded to operate in the 1.9 GHz PCS band.

In addition, the unlicensed ISM band typically requires power levels to be below 1 watt (+30dBm) with respect to a milliwatt (dBm). Power levels can therefore be adjusted from up to the approximately minimum +39dBm to provide microcellular-type distance ranges up to and including +48dBm for macrocell with directional antennas providing ranges of up to several miles.

BRIEF DESCRIPTION OF THE DRAWINGS

The foregoing and other objects, features and advantages of the invention will be apparent from the following more particular description of preferred embodiments of the invention, as illustrated in the accompanying drawings in which like reference characters refer to the same parts throughout the different views. The drawings are not necessarily to scale, emphasis

instead being placed upon illustrating the principles of the invention.

Fig. 1 is a block diagram of a licensed band access point according to the present invention.

Fig. 2 is a block diagram of a licensed band wireless network adapter according to the present invention.

Fig. 3 is a chart of wireless frequency ranges allocated in the United States.

Fig. 4 is a chart of licensed broadband Personal Communication Services (PCS) spectrum allocations in the United States.

DETAILED DESCRIPTION OF A PREFERRED EMBODIMENT

Turning attention now to Fig. 1, there is illustrated a data communication system 10 which makes use of a licensed band access point 12 to couple wireless local area network (LAN) signals between mobile computing equipment, such as a laptop computer 11-1 or personal digital assistant (PDA) 11-2, and fixed access location wired networks such as the Internet 20. Each of the computers 11 has associated with it a corresponding licensed band network adapter 40 which transmits and receives wireless LAN signals to and from the licensed band access point 12.

According to an important aspect of the present invention, the wireless LAN signals travel from the licensed band access point 12 to the licensed band network adapters 40 over radio links 50-1, 50-2 provided by modulated radio frequency (RF) carrier signals in licensed wireless service provider radio bands. Such radio bands preferably include the Personal Communication Services (PCS) band using radio frequency carriers in the 1.9 GHz range.

In the forward link direction, that is, for signals traveling from an Internet 20-connected device to the computers 11, a traffic signal path is provided through to the licensed band access point 12 through internetworking devices, such as an Internet gateway 16 and bridge 18, to a suitable standard compatible signaling format such as Ethernet/802.3 100baseT. Other internetworking devices may be connected to the bridge 18 to provide connectivity from the licensed band access point 12 to other computing equipment not shown in Fig. 1.

The signals received over the 100baseT connection are coupled to the wireline side of the licensed band access point 12. As shown in the drawing, the licensed band access point 12 consists of a number of components, including circuits which may be directly taken from designs for available access points operating in unlicensed frequency bands, such as those compliant with the Institute of Electrical and Electronic Engineers (IEEE) 802.11 Standard.

Such components consist of an 802.3 state machine 20, an 802.11 state machine 21, digital modulator 22, and digital demodulator 29.

Operating in accordance with the same functionality as existing off the shelf components, the 802.3 state machine 20 accepts signals from the 100baseT connection and decodes them to provide signals to the 802.11 state machine 21.

The 802.11 state machine 21 reformats such signals as base band analog signals with an encoding format compatible with the 802.11 standard. For example, such coding may be spread spectrum coding having an information bit rate of approximately 1 megabits per second (Mbps) with an 11 megachip per second

pseudorandom noise (PN) code chipping rate for direct sequence modulation as specified by that standard.

A primary stage modulator circuit 22 then takes this encoded base band signal and upconverts it to a convenient intermediate frequency (IF) carrier.

This modulated IF signal is then fed to a final stage transmitter 23. The final stage transmitter 23 includes a radio frequence (RF) upconverter mixer 30 and final stage RF filtering 32 with a center frequency and bandwidth compatible with the desired channel characteristics in the licensed PCS band.

A brief review of the frequency allocation ranges in the United States for such services assists with appreciating the possible frequency ranges within which the upconverter mixer 30 and bandpass filter 32 may operate. For example, turning attention to Fig. 3, on the right hand side is shown the range of wavelengths for the electromagnetic spectrum from 0 Hertz up to gamma-ray ranges. Within the range from approximately 100 kHz to 100 GHz are the wavelengths suitable for radio propagation. Within that bandwidth, there are three radio frequency bands of interest to the present invention. These include the cellular radio frequencies which run typically from 800-950 MHz, the licensed broadband PCS frequencies running from approximately 1850 MHz up to 1990 MHz, and the ISM band centered at approximately 2.4 GHz.

As shown in Fig. 4, there are a number of licensed PCS bands within the 1850-1990 MHz block. These include the six licensed bands commonly referred to as the A, B, C, D, E, and F blocks; A, B, and C block holders have typically paid for 15 MHz of bandwidth, whereas D, E, and F block holders have paid for 5 MHz of access. In Fig. 4, the "send" frequencies are the forward link

direction frequencies used to communicate from the central base station to the portable units, ranging from 1850 to 1910 MHz. The reverse link channel frequencies are allocated from 1930 MHz to 1990 MHz.

Returning attention now to Fig. 1, in the preferred embodiment, 802.11 access point circuits 20, 21, 22, and 29 are preferably selected from existing products that are designed to operate in the unlicensed ISM band at 2.4 GHz. This permits the modification of the final RF stage 23 to include an upconverter mixer 30 and final stage RF filter 32 that is selected to operate in one of the forward link PCS bands from 1850-1910 MHz as shown in Fig. 4. For example, a PCS license holder in the B block typically has the range available from 1870-1885 MHz available for forward link signaling. If such a service provider is, for example, providing voice services using the Telecommunication Industry Association (TIA) Code Division Multiple Access (CDMA) air interface standard known as IS-95A, the individual radio channel bandwidth associated with each transmitted signal is 1.25 MHz. Therefore, the 802.11 compliant modulator 22 provides a data signal within the spectrum remaining in the B block after allowing for one or more CDMA carriers at its IF output. This IF signal is then upconverted by the mixer 30 and appropriately bandwidth limited by the filter 32 to the PCS channel carrier frequency.

Such use is permitted by the Federal Communications Commission (FCC), the concern being only that a license holder such as a B block license holder does not radiate signals outside of the range from 1870-1885 MHz. The FCC does not regulate the air interface formatting used within this band.

The power amplifier 24 accepts such signals and adjusts their power level to be appropriate for the link budgets available within the cell size associated with the operator of the system 10. For example, an ISM band compatible standard 802.11 access point would typically require transmit power levels to be below 1 watt or on the order of 30 decibels with respect to a milliwatt (dBm) in order to avoid interference with other unlicensed equipment. However, the holder of a PCS broadband license can operate in its licensed bandwidth at much higher levels, typically varying from approximately 39dBm as implemented for certain microcellular footprints, up to 48dBm for macrocellular footprints using directional antennae. At the higher power levels, the access point 12 may be mounted onto a radio tower 26 at a 100 foot or higher level, to provide radio links 50 a distance of several miles.

In the reverse link direction, that is for signals traveling from the computing equipment 11 over the link 50, signals are received from the duplexer 25 which provides isolation from the high power amplifier 24 for the receiver low noise amplifier 27. The signals received in the reverse link PCS band channel from 1930 to 1990 MHz are then downconverted to an appropriate intermediate frequency associated with the demodulator 29. For example, in the case of the B license holder being described, the received channel may be central at a carrier frequency in the range of from 1950 to 1965 MHz.

The receiver mixer 34 and receiver filter 36 ensure that any signals fed to the demodulator 29 are in the selected channel. The demodulator 29 operates in accordance with a standard 802.11 access point demodulator, removing the spread spectrum modulation on

such signal and forwarding it to the 802.11 state machine controller 21. Such signals are then forwarded to the 802.3 state machine 20 over the 100baseT signaling to the bridge 18, gateway 16, and out to the Internet 20.

The licensed band network adapters 40-1 and 40-2 associated with computing equipment 11-1 and 11-2 are shown in more detail in Fig. 2. Such a licensed band network adapter 40 in the forward link direction receives radio signals over the link 50. In the case of a B block PCS license holder, the signals will be in the range of from 1870-1885 MHz. These RF signals are then fed through the duplexer 54 to a low noise amplifier 55. The input RF stage 56 has associated with it a mixer 57 and filter 58 to downcovert the PCS channel signal to a convenient IF carrier frequency. This IF signal is then fed to the remaining components of the licensed band network adapter 40 which may be constructed identically in accordance with an 802.11 compliant network adapter 70. These include a demodulator 60 providing IF demodulation of the received signals from the spread spectrum modulation specified by the IEEE 802.11 standard, to digital data signals compatible with the 802.11 state machine 61.

These demodulated and decoded signals are then fed to the computer 11 through a suitable personal computer (PC) interface. For example, in the case of mobile computing devices, this may commonly be a PCMCIA type interface 62. However, in the case of desktop computers making use of the wireless links 50, these may include PCI, ISA, USB, or other suitable PC interfaces.

In the reverse link direction carrying signals from the computer 11 to the link 50, signals received over the PC interface 62 are fed to the 802.11 state machine

61 and formatted as an appropriate modulated signal by the modulator 63. The spread spectrum modulated signal compatible with 802.11 signaling standard is then upconverted to the licensed PCS band by the upconverter 65. The mixer 66 and bandwidth filter 67 associated with the upcoverter 65 takes the IF signal generated by the modulator 63 and upconverts its carrier frequency to a carrier in the PCS band. For example, in the case of the B license holder being described, this would be a signal in the range of from 1950 to 1965 MHz. The power amplifier 68 sets an appropriate power level for the reverse link signal prior to forwarding it to the duplexer 54 and out to the antenna 52.

In the forward link direction, the power amplifier 25 associated with the licensed band access point 12 may operate at power levels similar to that of other PCS compatible transceivers. However, in the case of the reverse link direction, it may be typically necessary to engage in a detailed reverse link power budget analysis to set the output level of the power amplifier 68. Such an analysis considers the data rate expected to be supported on the reverse link, and the distance between the mobile unit 11 and access point 12. For example, a lower data rate permits the use of either a lower potential output power level controlled by the power amplifier 68, or greater reverse link range to the access point 12 to balance the link with the higher forward link access power.

It should be understood that various modifications may be made to the preferred embodiment as described above without departing from the spirit and scope of the claimed invention. In particular, although the final RF stages 23, 28, 56, and 65 of the licensed band access point 12 and licensed band network adapter 40 have been

described as interfacing with the modulator and the demodulators at IF, it should be understood that a band shift circuit may be applied to a final stage amplifier of 802.11 compatible equipment downbanding the nominal RF output from 2.4 GHz to 1.9 GHz. Likewise, although the system has been described as adapting 802.11 equipment operating in the ISM band at 2.4 GHz, it should be understood that other ISM bands exist, for example, an ISM band in the range of 915 MHz or 5.6 GHz is also unlicensed, and such equipment can similarly be adapted.

Other licensed band adaptations could include Wireless Communication Systems (WCS), General Wireless Communication Systems (GWCS), cellular, and Universal Mobile Telecommunications System (UMTS).

While this invention has been particularly shown and described with references to preferred embodiments thereof, it will be understood by those skilled in the art that various changes in form and details may be made therein without departing from the spirit and scope of the invention as defined by the appended claims.

CLAIMS

What is claimed is:

1. In a network for coupling local area network signals between an internetworking device and a plurality of remotely located computers to provide wireless data service within a geographic coverage area comprised of cells, the network comprising:
   (a) a plurality of licensed band access points, each deployed within a respective one of the cells, the licensed band access points each further comprising:
      (i) a wire network state machine for accepting signals from the internetworking device and providing a data signal;
      (ii) an encoder for encoding the data signal according to a data communication specification for transmission in an unlicensed radio band; and
      (iii) a converter for converting the encoded data signal to a carrier frequency in a licensed radio band; and
   (b) a licensed band network adapter coupled to the computing equipment and further comprising:
      (i) a licensed radio band downconverter for receiving the converted data signal transmitted over the air to the location of the computing equipment, the downconverter providing a received signal at an output;
      (ii) a decoder for accepting the received signal and decoding it according to a

data communication specification for reception in an unlicensed radio band; and

(iii) a local area network adapter for converting the decoded data signal to provide a compatible local area network data signal to a remotely located computer.

2. A network as in claim 1 wherein the converter in the licensed band access point also upconverts the encoded data signal from an intermediate frequency (IF) modulated data signal.

3. A network as in claim 1 wherein the converter in the licensed band access point converts the encoded data signal to a carrier in the unlicensed radio band prior to conversion to a carrier frequency in the licensed radio band.

4. A network as in claim 1 wherein the licensed radio band is a Personal Communication Services (PCS) band.

5. A network as in claim 1 wherein the unlicensed radio band is an IEEE 802.11 compliant radio band.

1/3

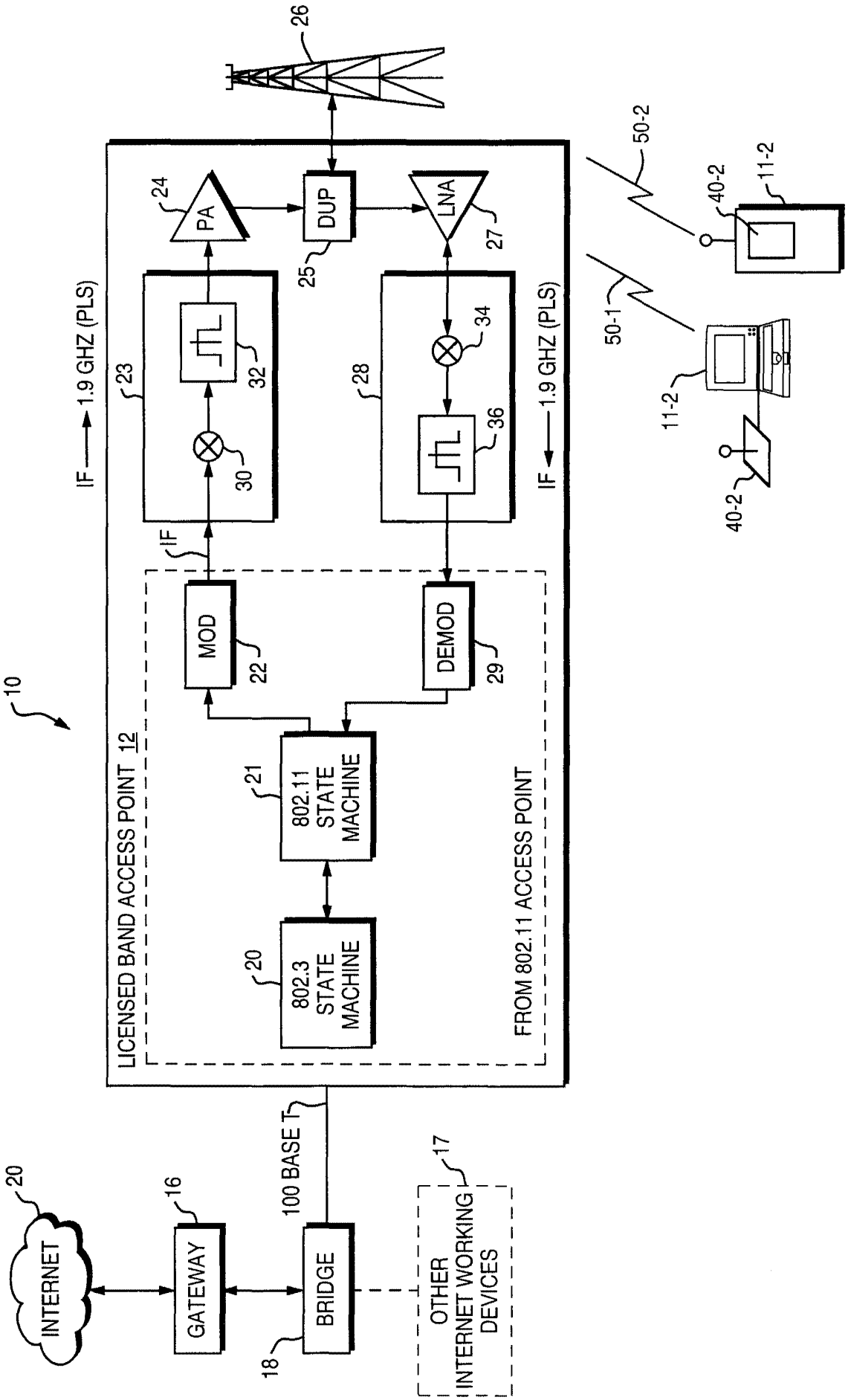
10
LICENSED BAND ACCESS POINT 12
FROM 802.11 ACCESS POINT
802.3 STATE MACHINE
20
802.11 STATE MACHINE
21
MOD
22
DEMOD
29
IF
23
30
32
PA
24
DUP
25
LNA
27
28
34
36
IF ⟶ 1.9 GHZ (PLS)
IF ⟵ 1.9 GHZ (PLS)
26
50-1
50-2
40-2
11-2
INTERNET
20
GATEWAY
16
BRIDGE
18
100 BASE T
OTHER INTERNET WORKING DEVICES
17

FIG. 1

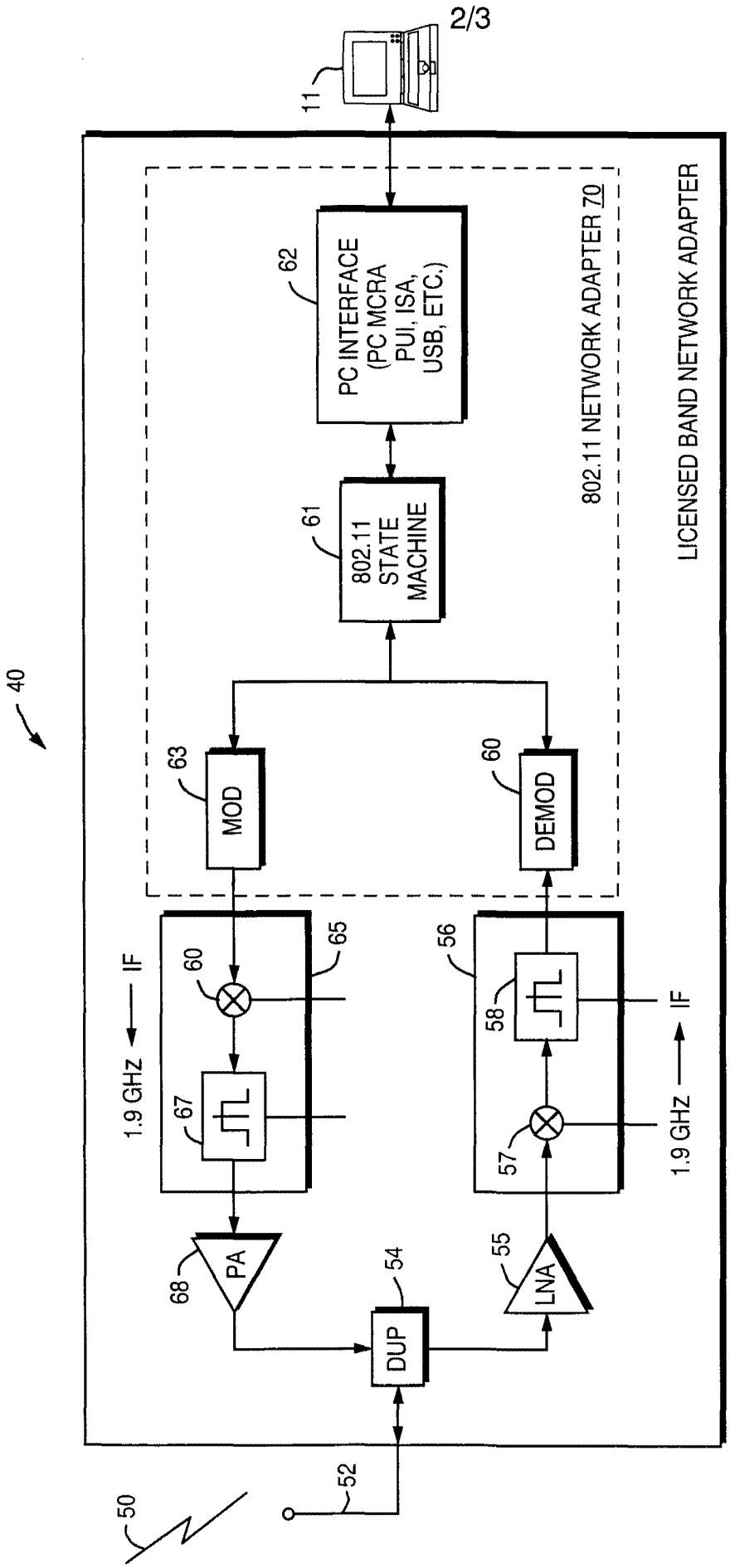
40
11
PC INTERFACE (PC MCRA PUI, ISA, USB, ETC.)
62
802.11 STATE MACHINE
61
802.11 NETWORK ADAPTER 70
LICENSED BAND NETWORK ADAPTER
MOD
63
DEMOD
60
1.9 GHz
IF
60
65
67
56
58
57
IF
1.9 GHz
PA
68
DUP
54
LNA
55
52
50

FIG. 2

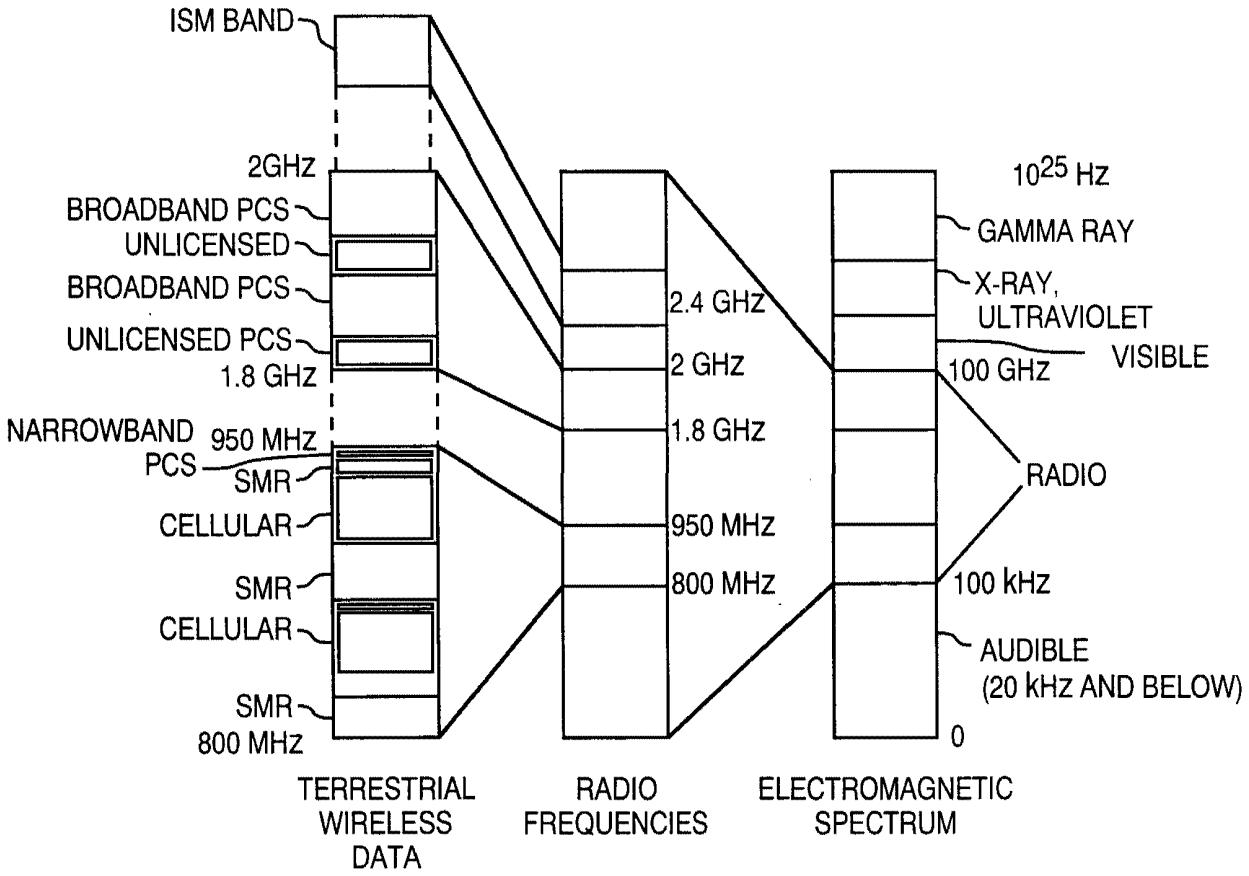
ISM BAND
2GHz
BROADBAND PCS
UNLICENSED
BROADBAND PCS
UNLICENSED PCS
1.8 GHZ
NARROWBAND 950 MHz
PCS
SMR
CELLULAR
SMR
CELLULAR
SMR
800 MHz
2.4 GHZ
2 GHZ
1.8 GHZ
950 MHz
800 MHz
10^{25} Hz
GAMMA RAY
X-RAY,
ULTRAVIOLET
VISIBLE
100 GHZ
RADIO
100 kHz
AUDIBLE
(20 kHz AND BELOW)
0
TERRESTRIAL
WIRELESS
DATA
RADIO
FREQUENCIES
ELECTROMAGNETIC
SPECTRUM

FIG. 3

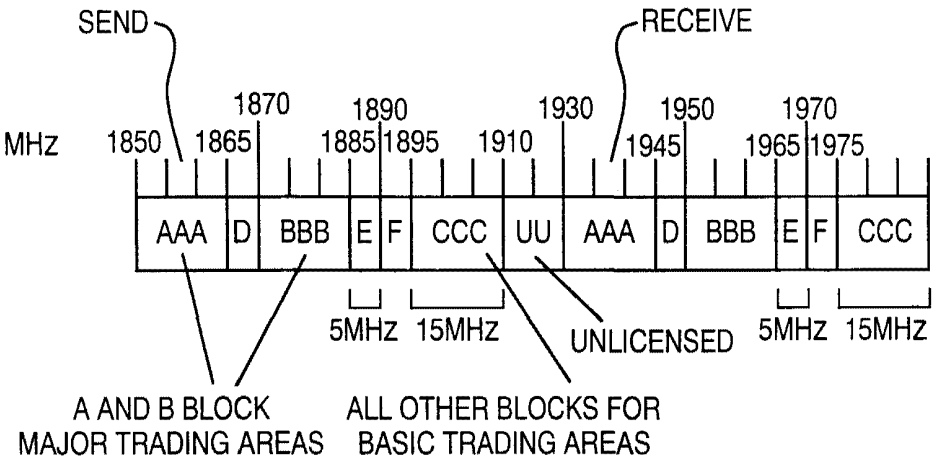
SEND
RECEIVE
MHz
1850
1865
1870
1885
1890
1895
1910
1930
1945
1950
1965
1970
1975
AAA
D
BBB
E
F
CCC
UU
AAA
D
BBB
E
F
CCC
5MHz
15MHz
UNLICENSED
5MHz
15MHz
A AND B BLOCK
MAJOR TRADING AREAS
ALL OTHER BLOCKS FOR
BASIC TRADING AREAS

FIG. 4

INTERNATIONAL SEARCH REPORT

Inte: ›nal Application No
PCT/US 00/10735

A. CLASSIFICATION OF SUBJECT MATTER
IPC 7 H04L12/28

According to International Patent Classification (IPC) or to both national classification and IPC

B. FIELDS SEARCHED

Minimum documentation searched (classification system followed by classification symbols)
IPC 7 H04L H04B

Documentation searched other than minimum documentation to the extent that such documents are included in the fields searched

Electronic data base consulted during the international search (name of data base and, where practical, search terms used)

EPO-Internal, PAJ

C. DOCUMENTS CONSIDERED TO BE RELEVANT

Category °	Citation of document, with indication, where appropriate, of the relevant passages	Relevant to claim No.
A	EP 0 756 392 A (AT & T CORP) 29 January 1997 (1997-01-29) column 1, line 11 - line 47 column 2, line 36 -column 3, line 11 column 5, line 40 -column 7, line 4 ---	1
A	EP 0 720 330 A (AT & T CORP) 3 July 1996 (1996-07-03) column 1, line 45 - line 58 column 3, line 35 - line 55 -----	1

☐ Further documents are listed in the continuation of box C.

☒ Patent family members are listed in annex.

° Special categories of cited documents :

"A" document defining the general state of the art which is not considered to be of particular relevance

"E" earlier document but published on or after the international filing date

"L" document which may throw doubts on priority claim(s) or which is cited to establish the publication date of another citation or other special reason (as specified)

"O" document referring to an oral disclosure, use, exhibition or other means

"P" document published prior to the international filing date but later than the priority date claimed

"T" later document published after the international filing date or priority date and not in conflict with the application but cited to understand the principle or theory underlying the invention

"X" document of particular relevance; the claimed invention cannot be considered novel or cannot be considered to involve an inventive step when the document is taken alone

"Y" document of particular relevance; the claimed invention cannot be considered to involve an inventive step when the document is combined with one or more other such documents, such combination being obvious to a person skilled in the art.

"&" document member of the same patent family

Date of the actual completion of the international search	Date of mailing of the international search report
18 August 2000	25/08/2000

Name and mailing address of the ISA	Authorized officer
European Patent Office, P.B. 5818 Patentlaan 2 NL – 2280 HV Rijswijk Tel. (+31–70) 340–2040, Tx. 31 651 epo nl, Fax: (+31–70) 340–3016	Brichau, G

1

Form PCT/ISA/210 (second sheet) (July 1992)

INTERNATIONAL SEARCH REPORT

Information on patent family members

Inter nal Application No
PCT/US 00/10735

Patent document cited in search report	Publication date	Patent family member(s)	Publication date
EP 0756392 A	29-01-1997	US 5890055 A	30-03-1999
		CA 2173283 A	29-01-1997
		JP 9046284 A	14-02-1997
		NO 963136 A	29-01-1997
EP 0720330 A	03-07-1996	US 5684801 A	04-11-1997
		CA 2161162 A	01-07-1996
		JP 8242232 A	17-09-1996

Form PCT/ISA/210 (patent family annex) (July 1992)