US008471362B2

(12) **United States Patent**
Lee

(10) **Patent No.: US 8,471,362 B2**
(45) **Date of Patent: Jun. 25, 2013**

(54) **THREE-DIMENSIONAL STACKED STRUCTURE SEMICONDUCTOR DEVICE HAVING THROUGH-SILICON VIA AND SIGNALING METHOD FOR THE SEMICONDUCTOR DEVICE**

(75) Inventor: **Jong-joo Lee**, Suwon-si (KR)

(73) Assignee: **Samsung Electronics Co., Ltd.**, Suwon-si, Gyeonggi-do (KR)

(*) Notice: Subject to any disclaimer, the term of this patent is extended or adjusted under 35 U.S.C. 154(b) by 233 days.

(21) Appl. No.: **13/080,042**

(22) Filed: **Apr. 5, 2011**

(65) **Prior Publication Data**

US 2011/0309475 A1 Dec. 22, 2011

(30) **Foreign Application Priority Data**

Jun. 18, 2010 (KR) 10-2010-0058233

(51) **Int. Cl.**
H01L 21/02 (2006.01)

(52) **U.S. Cl.**
USPC **257/532**; 257/621; 257/698; 257/E23.174; 257/E29.345

(58) **Field of Classification Search**
USPC 257/532, 621, 698, E23.174, E29.345
See application file for complete search history.

(56) **References Cited**

U.S. PATENT DOCUMENTS

7,385,281	B2	6/2008	Nishio et al.	
8,148,814	B2 *	4/2012	Furuta et al.	257/723
2009/0086524	A1 *	4/2009	Alam et al.	365/94
2010/0078635	A1	4/2010	Kuroda et al.	

FOREIGN PATENT DOCUMENTS

KR 1020100011613 A 2/2010

* cited by examiner

Primary Examiner — Tu-Tu Ho
(74) *Attorney, Agent, or Firm* — Volentine & Whitt, PLLC

(57) **ABSTRACT**

A three-dimensional (3D) semiconductor device including a plurality of stacked layers and a through-silicon via (TSV) electrically connecting the plurality of layers, in which in signal transmission among the plurality of layers, the TSV transmits a signal that swings in a range from an offset voltage that is higher than a ground voltage to a power voltage, thereby minimizing an influence of a metal-oxide-semiconductor (MOS) capacitance of TSV.

18 Claims, 27 Drawing Sheets

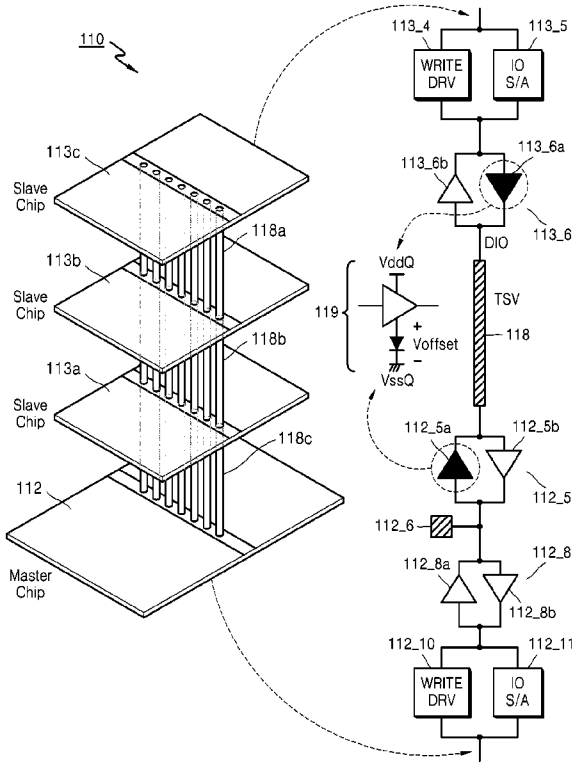

FIG. 1A

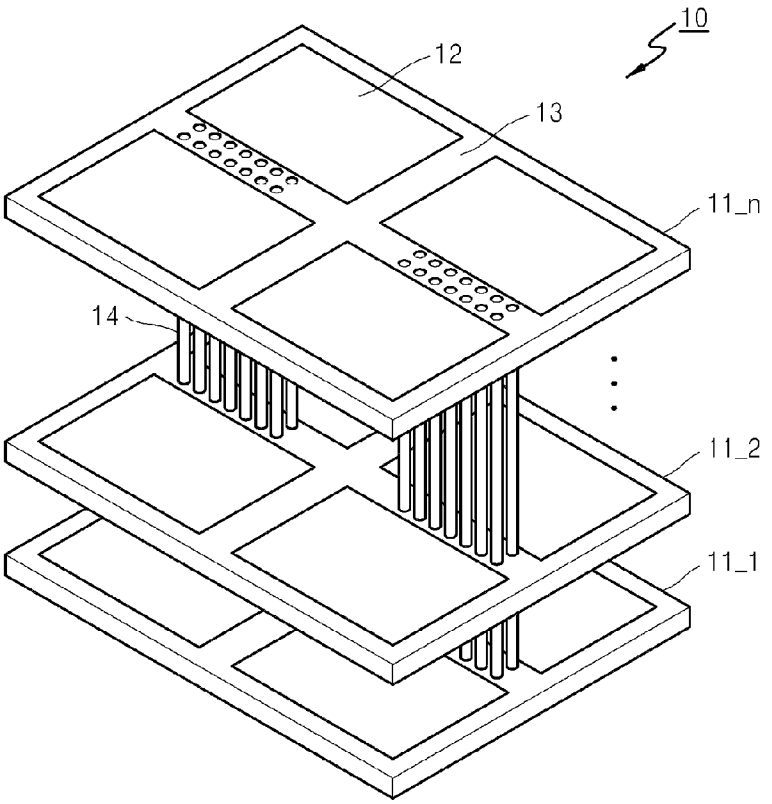

FIG. 1B

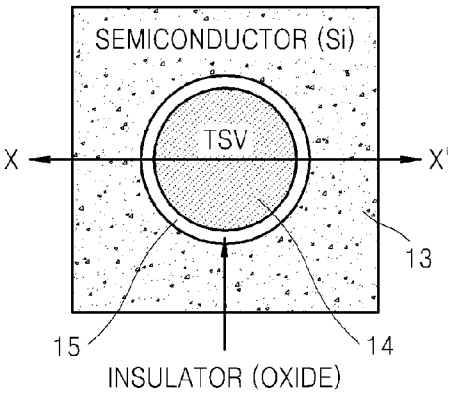

FIG. 1C

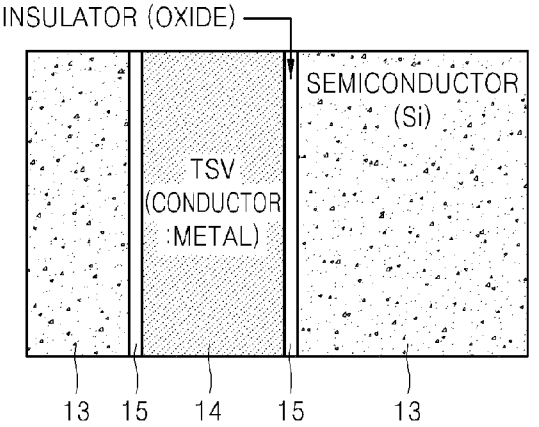

FIG. 2A

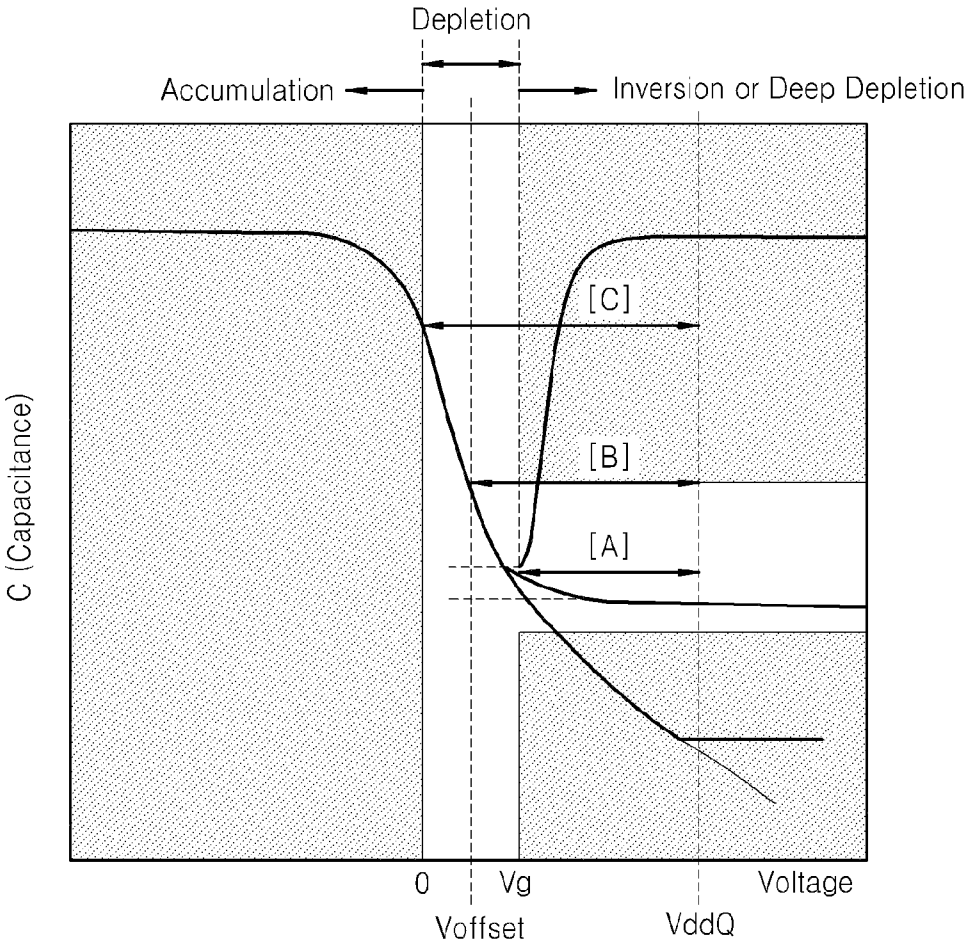

FIG. 2B

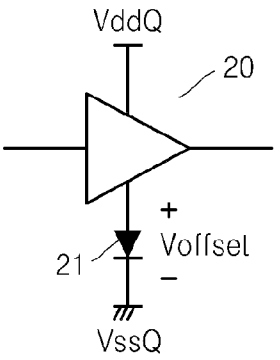

FIG. 2C

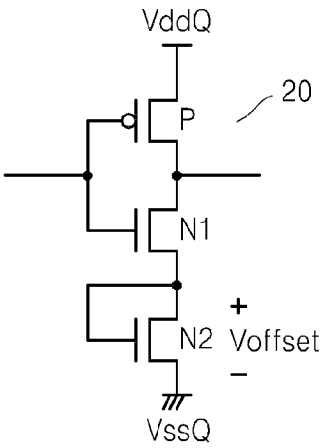

FIG. 3

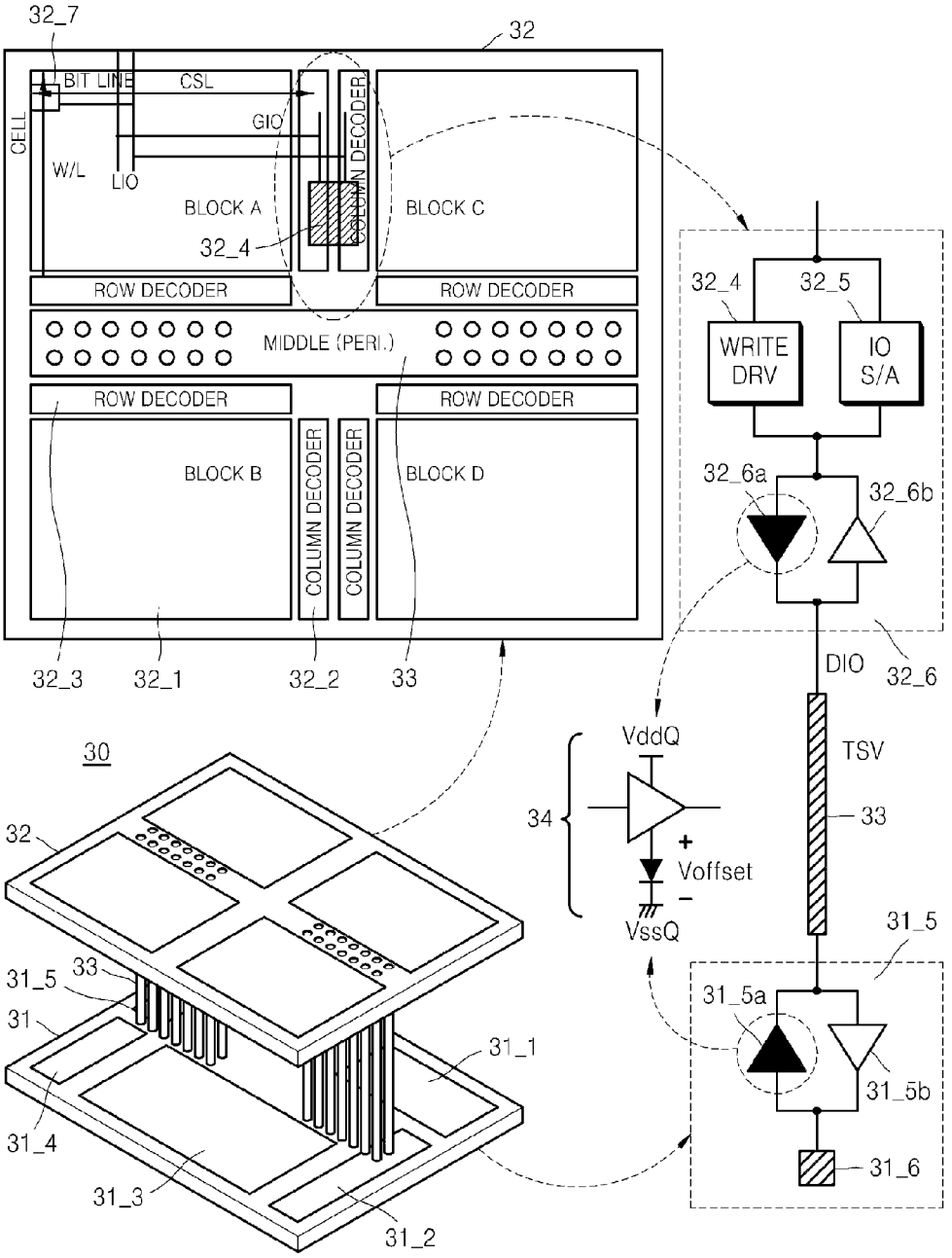
32_7
32
BIT LINE
CSL
GIO
CELL
W/L
LIO
BLOCK A
BLOCK C
COLUMN DECODER
32_4
ROW DECODER
ROW DECODER
MIDDLE (PERI.)
ROW DECODER
ROW DECODER
BLOCK B
BLOCK D
COLUMN DECODER
COLUMN DECODER
32_3
32_1
32_2
33
32_4
32_5
WRITE DRV
IO S/A
32_6a
32_6b
DIO
32_6
VddQ
TSV
34
33
Voffset
VssQ
31_5
31_5a
31_5b
31_6
30
32
33
31_5
31
31_1
31_4
31_3
31_2

FIG. 4

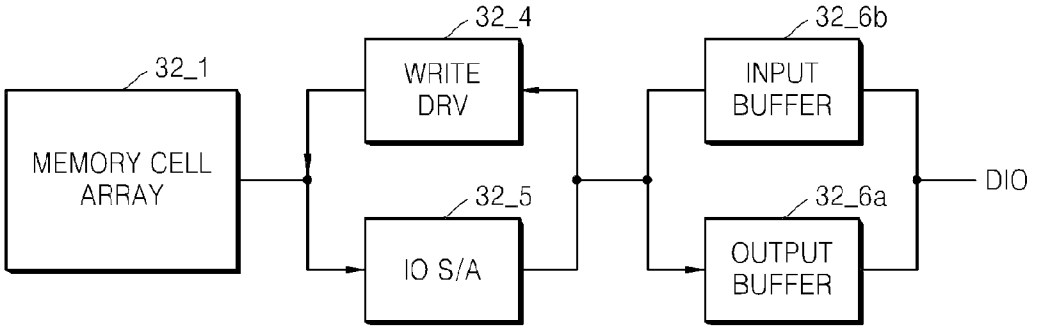
32_1
MEMORY CELL ARRAY
32_4
WRITE DRV
32_5
IO S/A
32_6b
INPUT BUFFER
32_6a
OUTPUT BUFFER
DIO

FIG. 5A

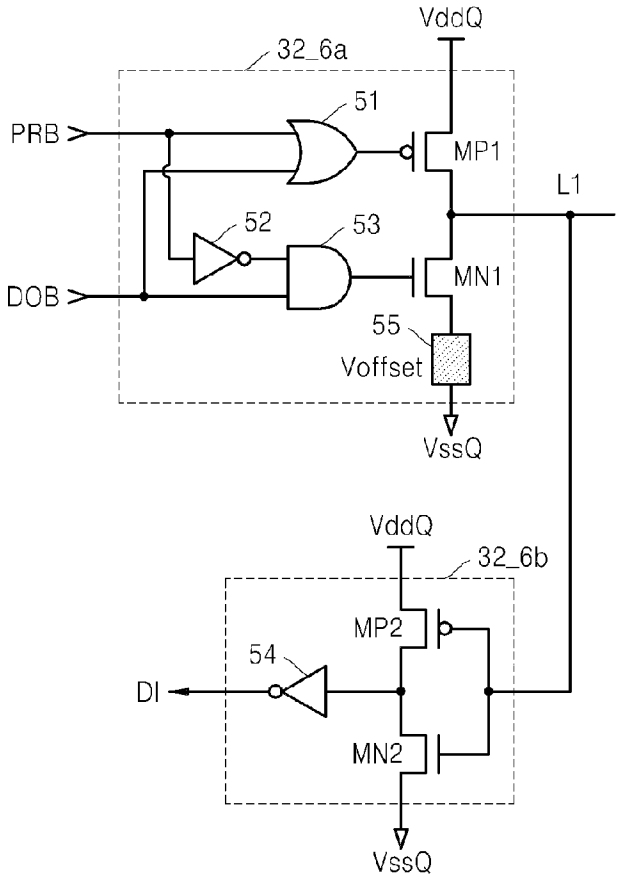
VddQ
32_6a
51
PRB
MP1
L1
52
53
DOB
MN1
55
Voffset
VssQ
VddQ
32_6b
MP2
54
DI
MN2
VssQ

FIG. 5B

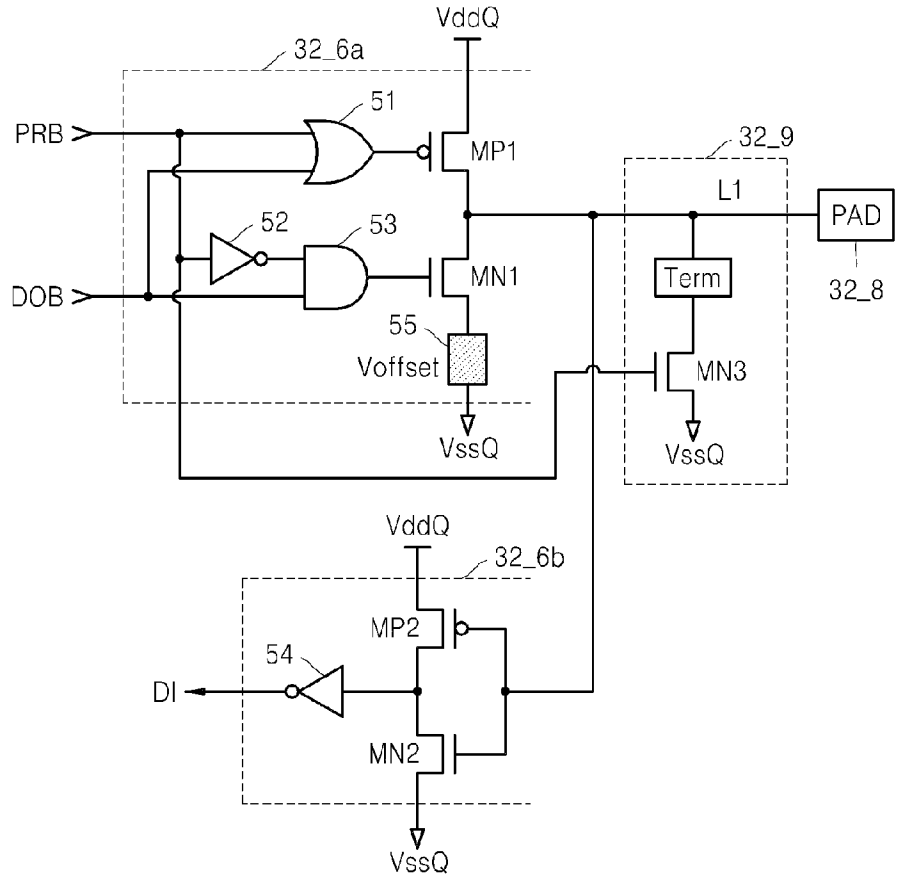
VddQ
32_6a
51
PRB
MP1
32_9
L1
PAD
52
53
DOB
MN1
Term
32_8
55
Voffset
MN3
VssQ
VssQ
VddQ
32_6b
MP2
54
DI
MN2
VssQ

FIG. 6A

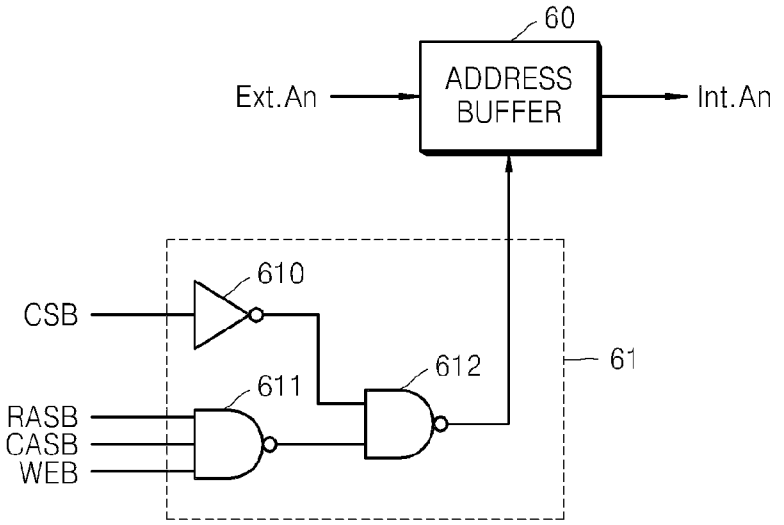
60
ADDRESS BUFFER
Ext.An
Int.An
610
CSB
612
61
611
RASB
CASB
WEB

FIG. 6B

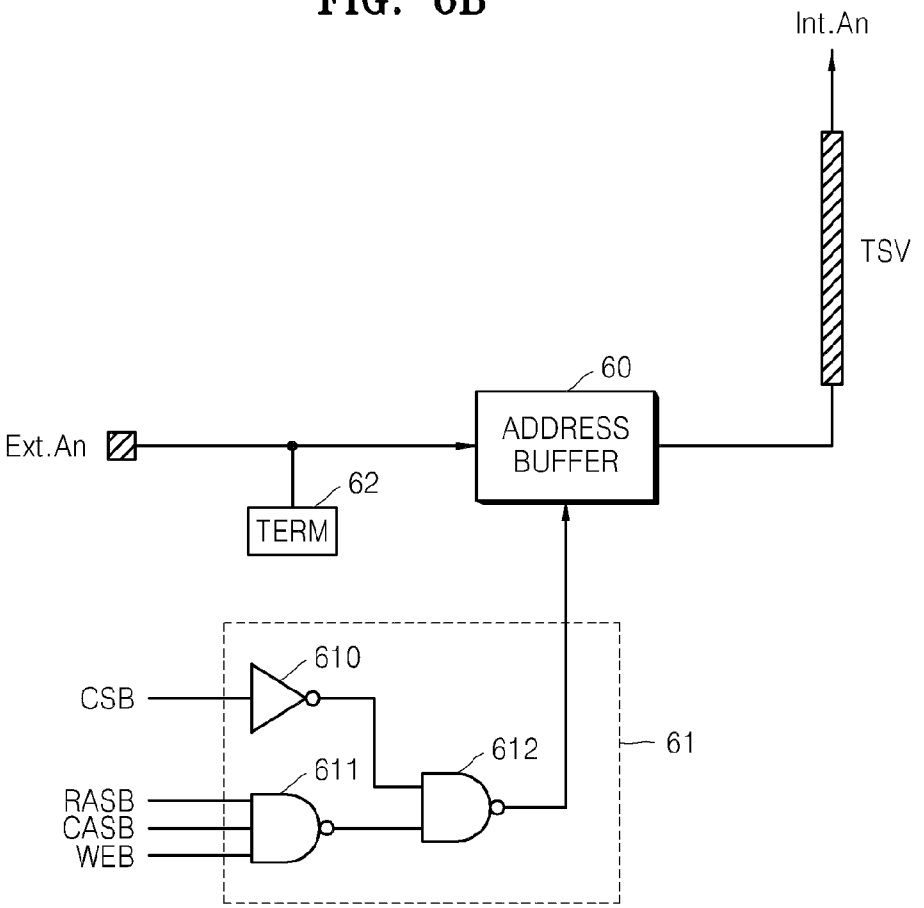
Int.An
TSV
60
ADDRESS BUFFER
Ext.An
62
TERM
610
CSB
612
61
611
RASB
CASB
WEB

FIG. 7

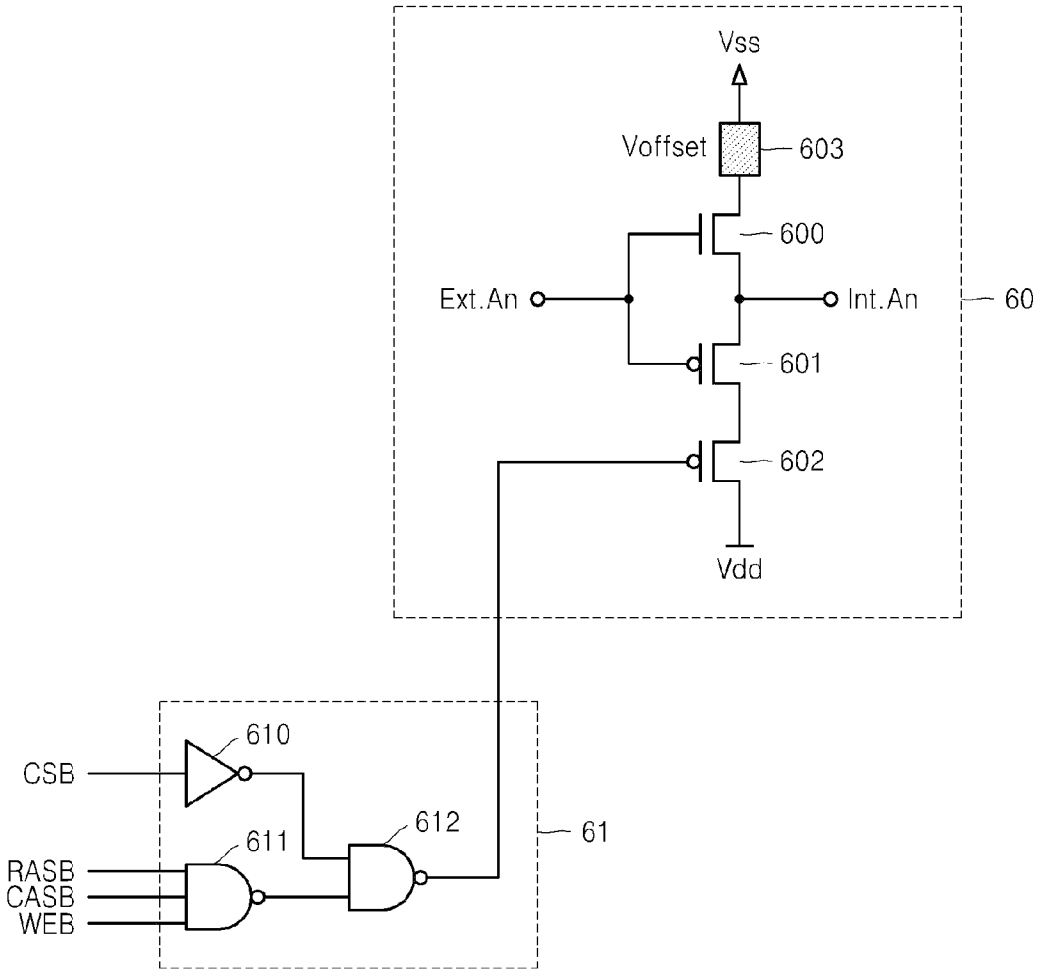
Vss
Voffset
603
600
Ext.An
Int.An
60
601
602
Vdd
610
CSB
612
611
61
RASB
CASB
WEB

FIG. 8

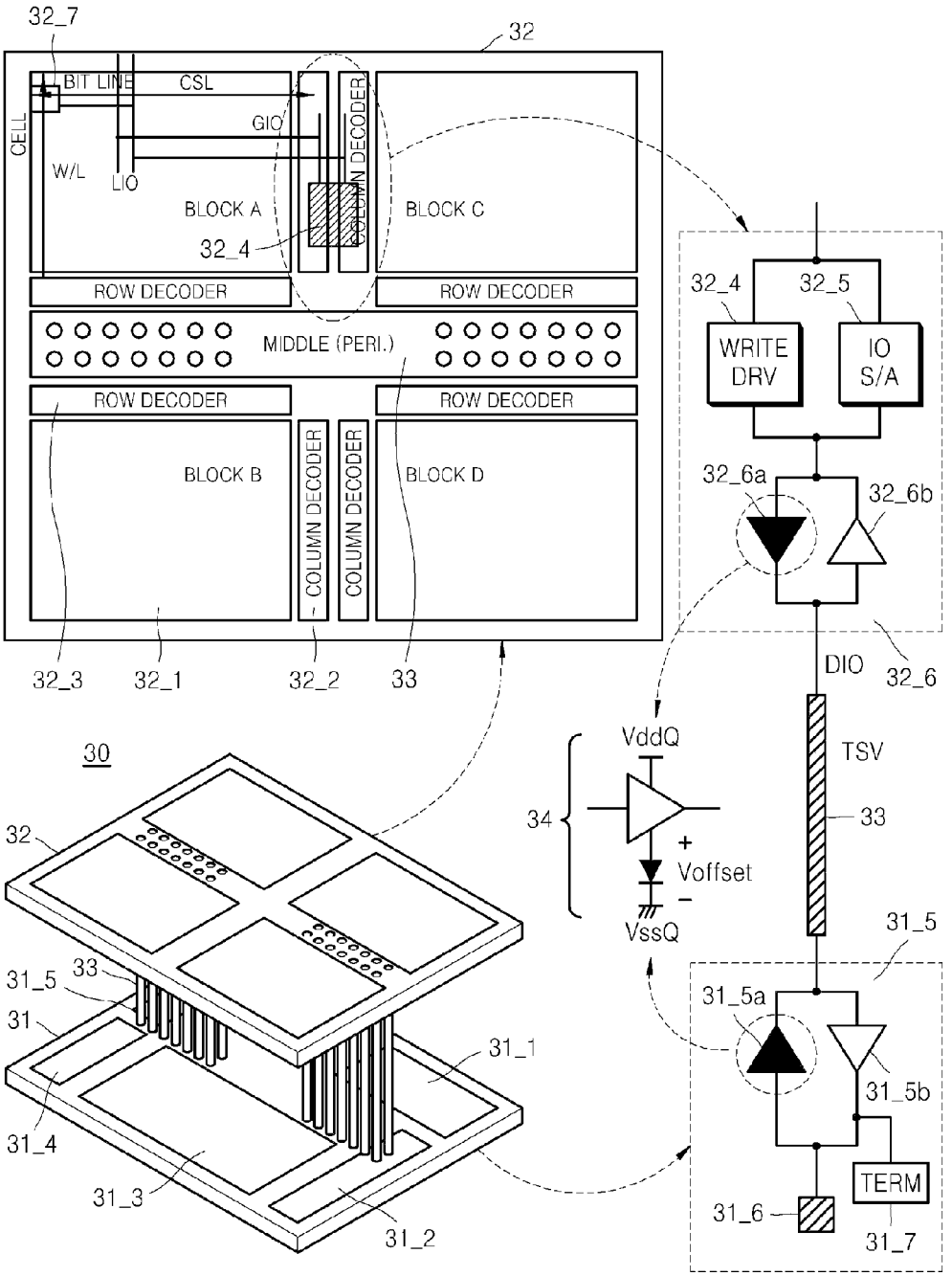
32_7
32
BIT LINE
CSL
CELL
GIO
W/L
LIO
BLOCK A
BLOCK C
32_4
COLUMN DECODER
ROW DECODER
ROW DECODER
MIDDLE (PERI.)
ROW DECODER
ROW DECODER
BLOCK B
BLOCK D
COLUMN DECODER
COLUMN DECODER
32_3
32_1
32_2
33
32_4
32_5
WRITE DRV
IO S/A
32_6a
32_6b
DIO
32_6
VddQ
TSV
34
33
+
Voffset
−
VssQ
31_5
31_5a
31_5b
TERM
31_6
31_7
30
32
33
31_5
31
31_1
31_4
31_3
31_2

FIG. 9

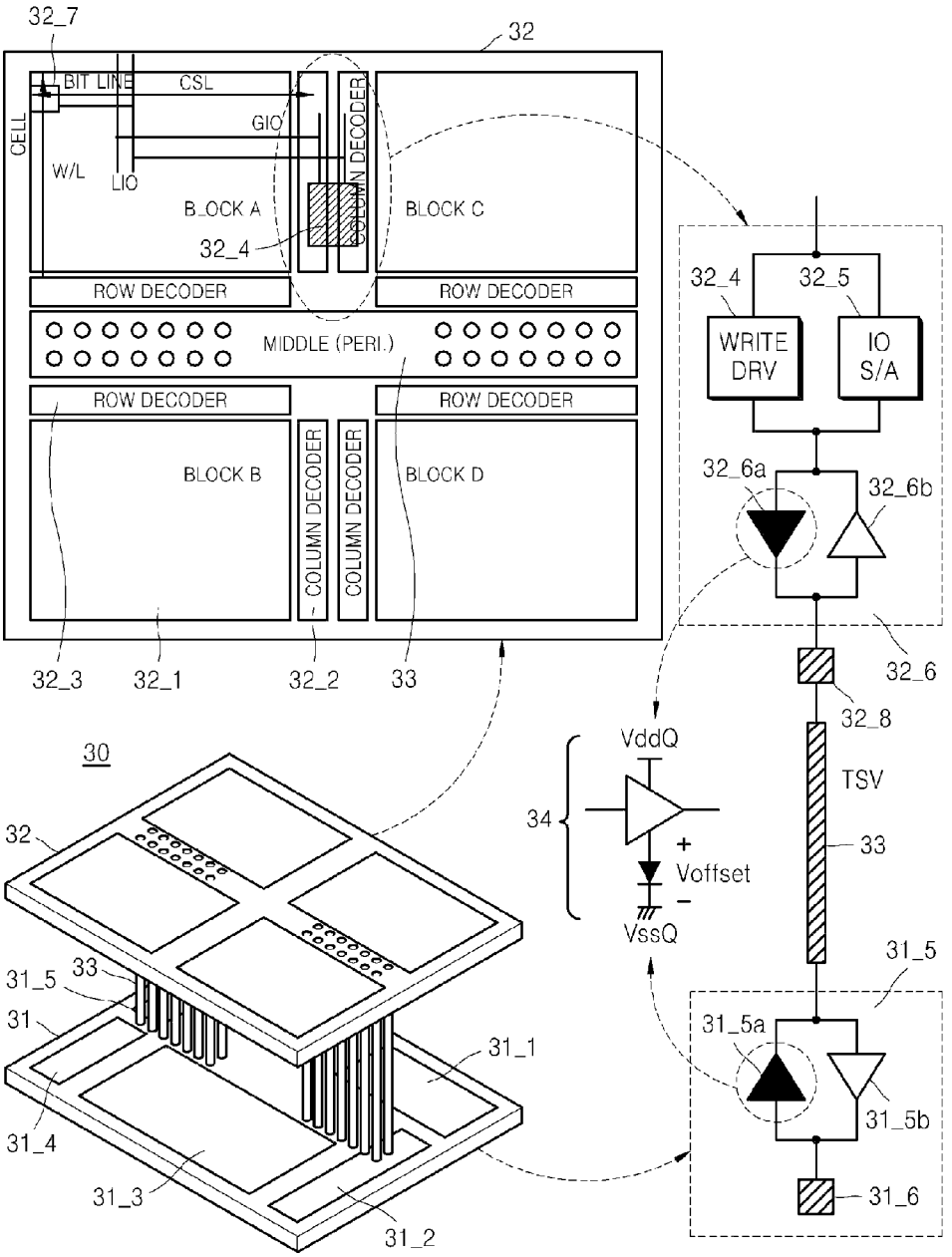
32_7
32
BIT LINE
CSL
CELL
GIO
W/L
LIO
COLUMN DECODER
B_OCK A
BLOCK C
32_4
ROW DECODER
ROW DECODER
MIDDLE (PERI.)
ROW DECODER
ROW DECODER
BLOCK B
COLUMN DECODER
COLUMN DECODER
BLOCK D
32_3
32_1
32_2
33
32_4
32_5
WRITE DRV
IO S/A
32_6a
32_6b
32_6
32_8
TSV
33
VddQ
34
+
Voffset
−
VssQ
31_5
31_5a
31_5b
31_6
30
32
33
31_5
31
31_1
31_4
31_3
31_2

FIG. 10

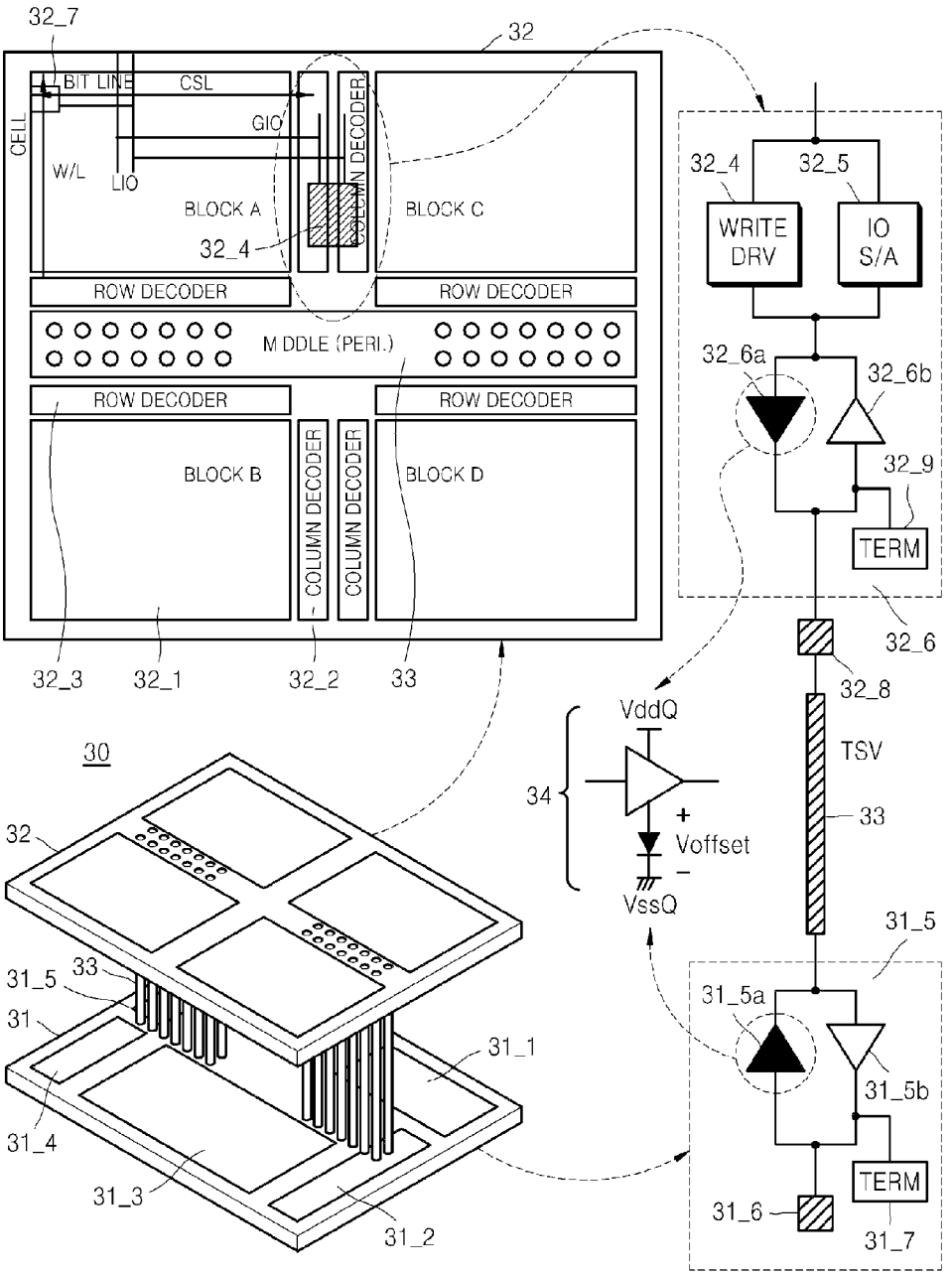
32_7
32
BIT LINE
CSL
GIO
CELL
W/L
LIO
BLOCK A
BLOCK C
32_4
COLUMN DECODER
ROW DECODER
ROW DECODER
M DDLE (PERI.)
ROW DECODER
ROW DECODER
BLOCK B
BLOCK D
COLUMN DECODER
COLUMN DECODER
32_3
32_1
32_2
33
32_4
32_5
WRITE DRV
IO S/A
32_6a
32_6b
32_9
TERM
32_6
32_8
TSV
33
VddQ
34
+
Voffset
−
VssQ
31_5
31_5a
31_5b
TERM
31_6
31_7
30
32
33
31_5
31
31_1
31_4
31_3
31_2

FIG. 11

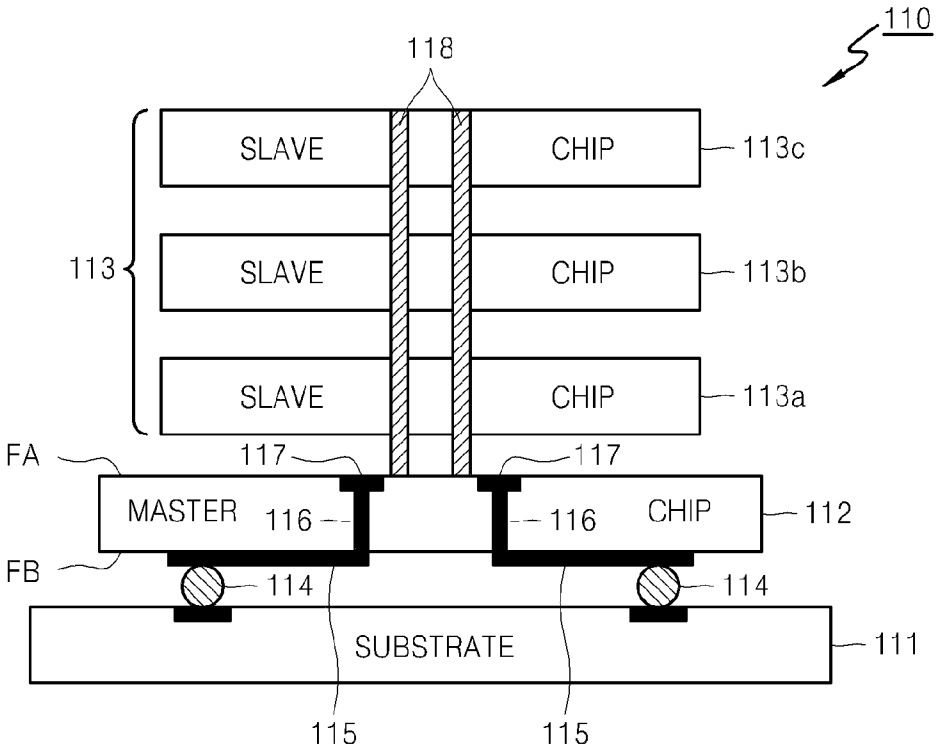
110
118
SLAVE
CHIP
113c
113
SLAVE
CHIP
113b
SLAVE
CHIP
113a
FA
117
117
MASTER
116
116
CHIP
112
FB
114
114
SUBSTRATE
111
115
115

FIG. 12A

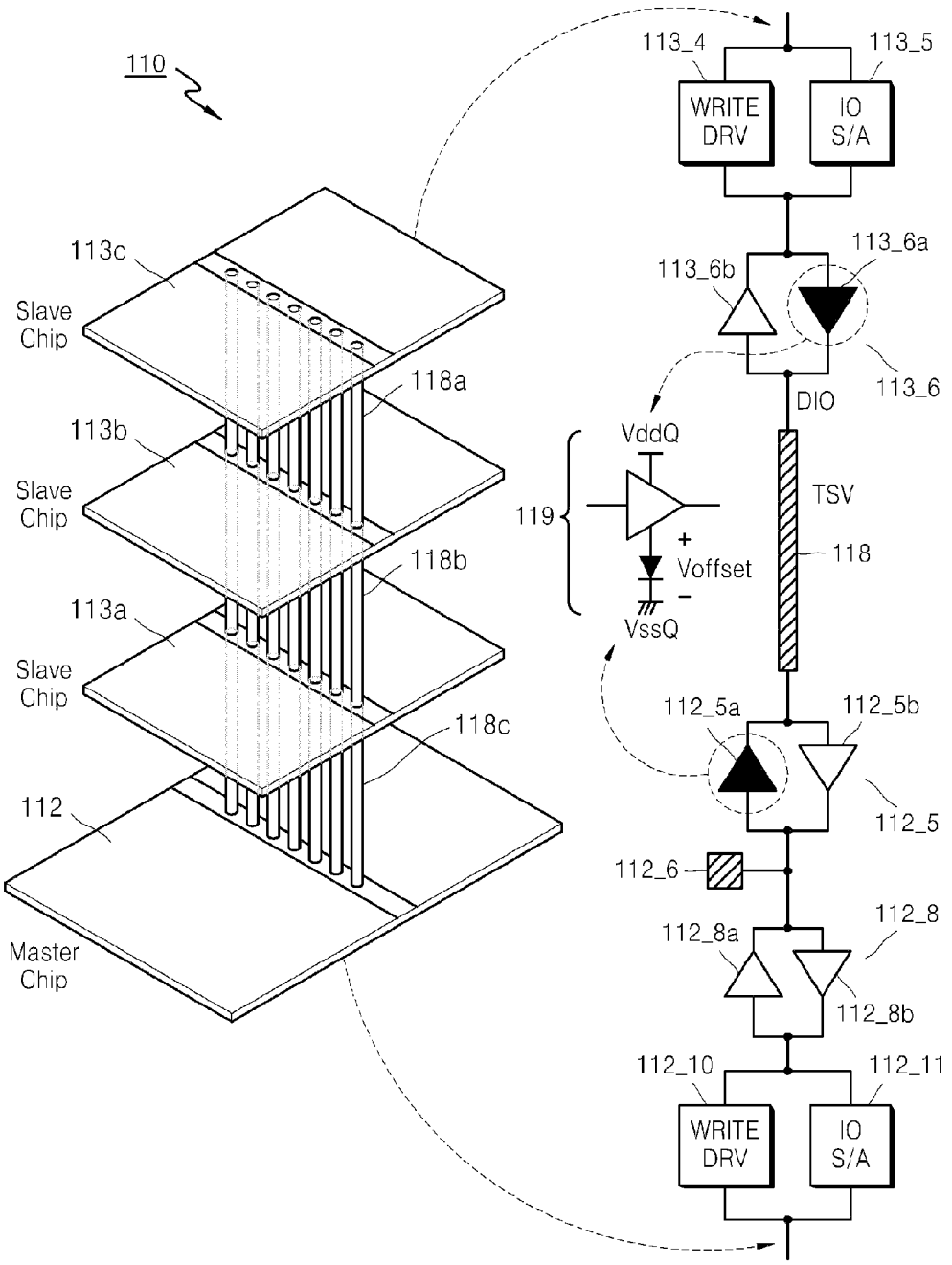
110
113c
Slave Chip
113b
Slave Chip
113a
Slave Chip
112
Master Chip
118a
118b
118c
113_4
113_5
WRITE DRV
IO S/A
113_6a
113_6b
113_6
DIO
VddQ
119
+
Voffset
−
VssQ
TSV
118
112_5a
112_5b
112_5
112_6
112_8
112_8a
112_8b
112_10
112_11
WRITE DRV
IO S/A

FIG. 12B

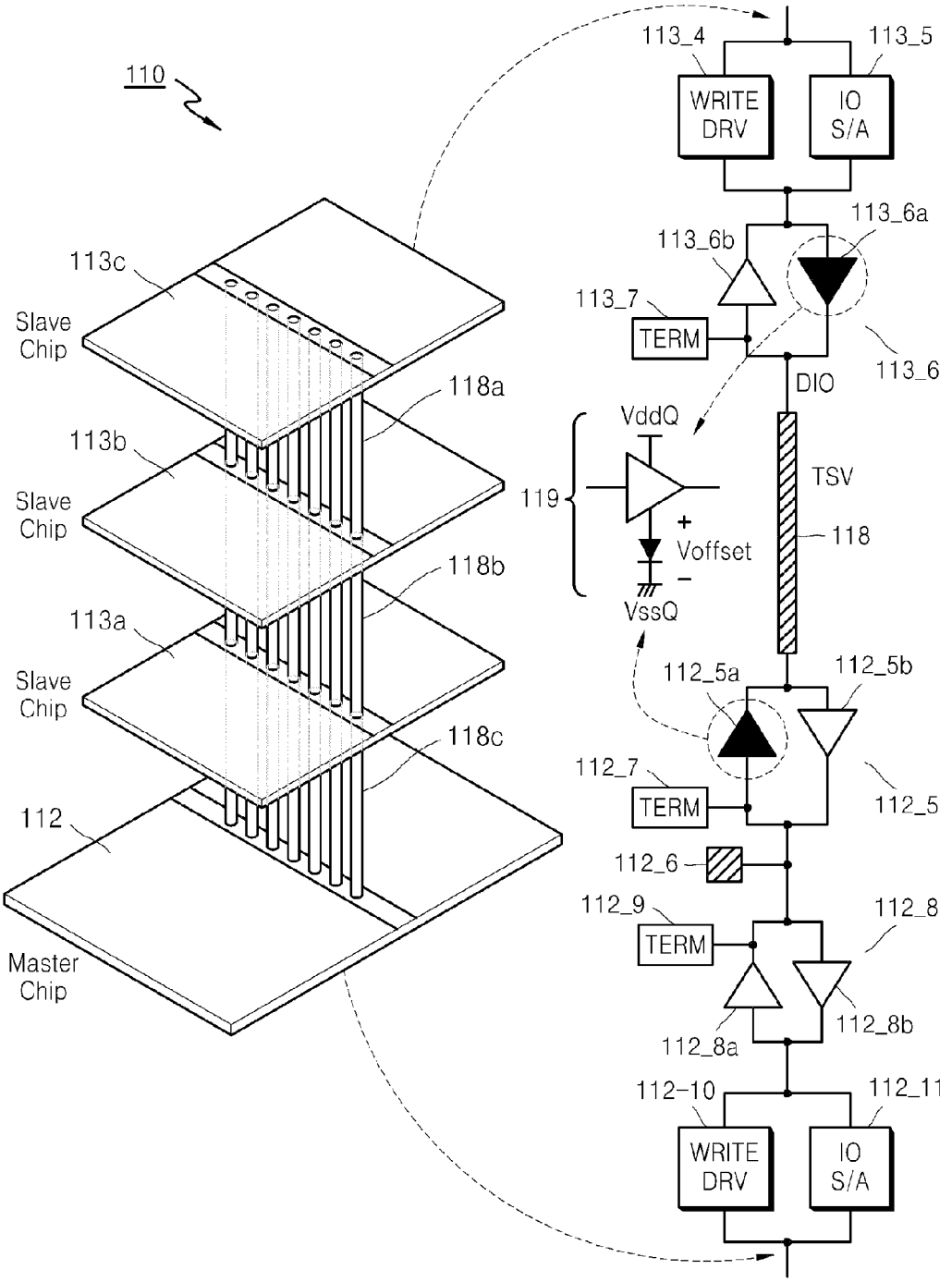
110
113c
Slave Chip
113b
Slave Chip
113a
Slave Chip
112
Master Chip
118a
118b
118c
113_4
WRITE DRV
113_5
IO S/A
113_6a
113_6b
113_7
TERM
113_6
DIO
VddQ
119
+
Voffset
−
VssQ
TSV
118
112_5a
112_5b
112_7
TERM
112_5
112_6
112_9
TERM
112_8
112_8a
112_8b
112-10
WRITE DRV
112_11
IO S/A

FIG. 13

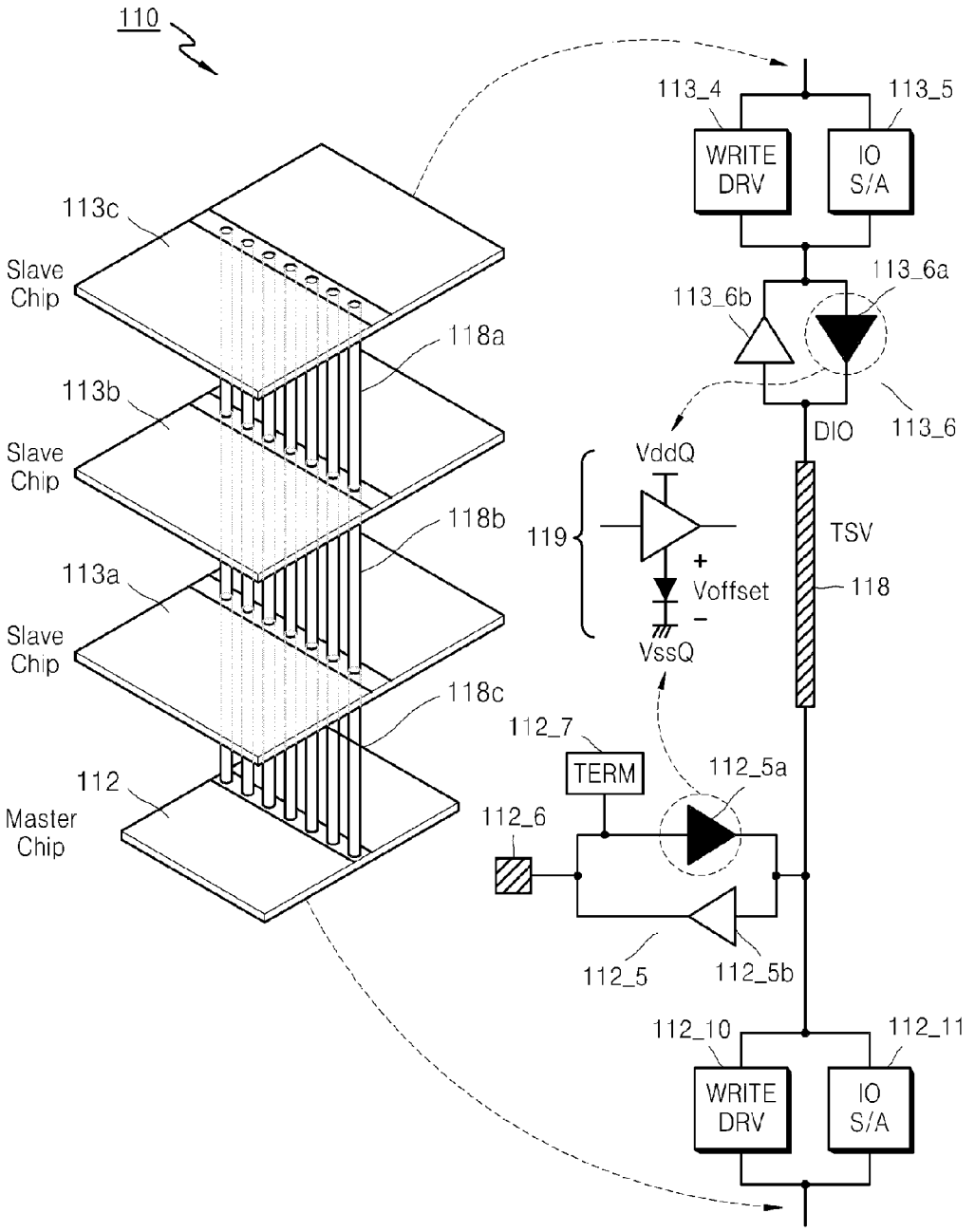
110
113_4
113_5
WRITE DRV
IO S/A
113c
Slave Chip
113_6a
113_6b
118a
113b
Slave Chip
DIO
113_6
VddQ
119
TSV
118b
+
Voffset
118
113a
Slave Chip
−
VssQ
118c
112_7
TERM
112_5a
112
Master Chip
112_6
112_5
112_5b
112_10
112_11
WRITE DRV
IO S/A

FIG. 14

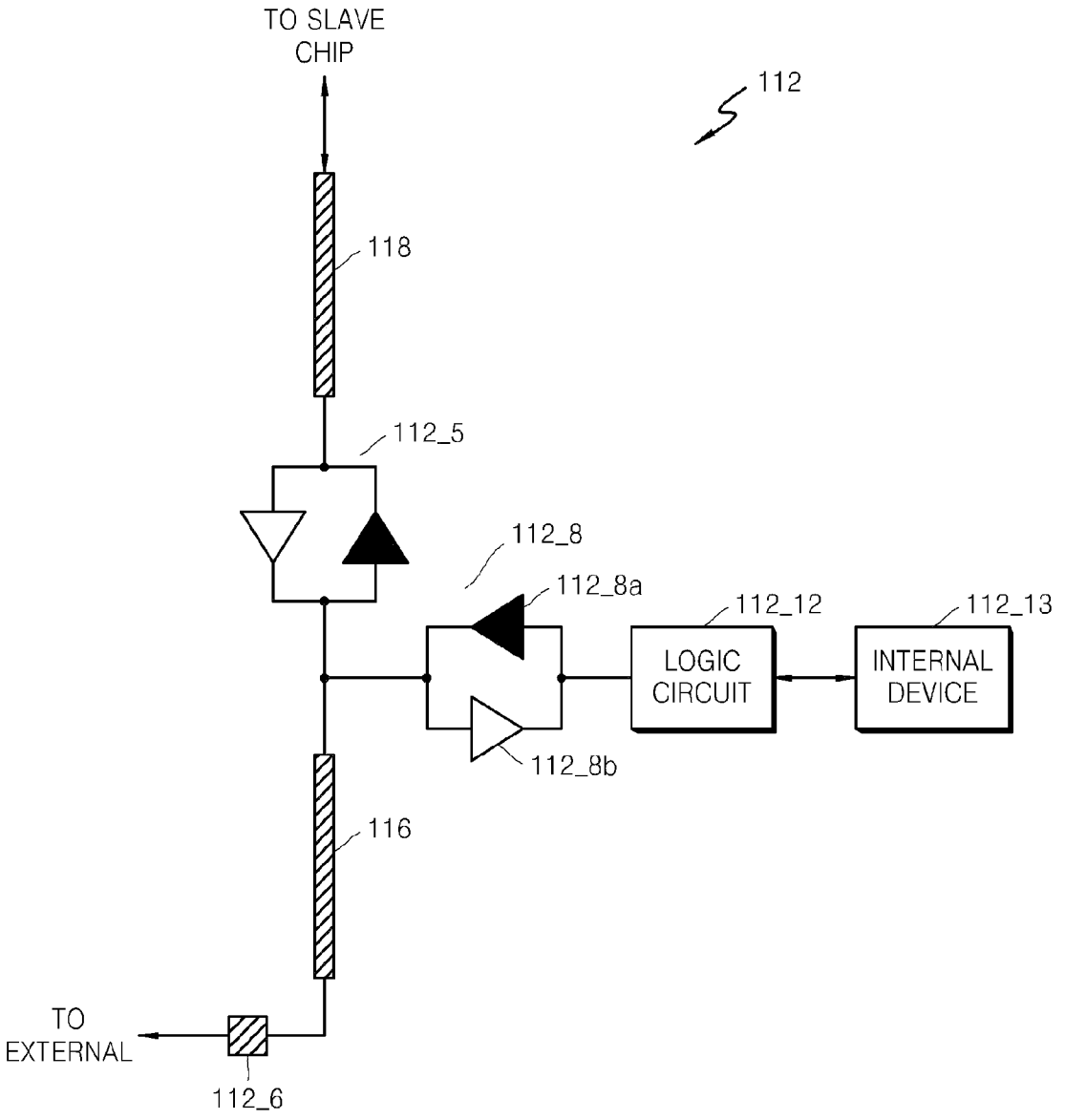
TO SLAVE CHIP
112
118
112_5
112_8
112_8a
112_12
112_13
LOGIC CIRCUIT
INTERNAL DEVICE
112_8b
116
TO EXTERNAL
112_6

FIG. 15

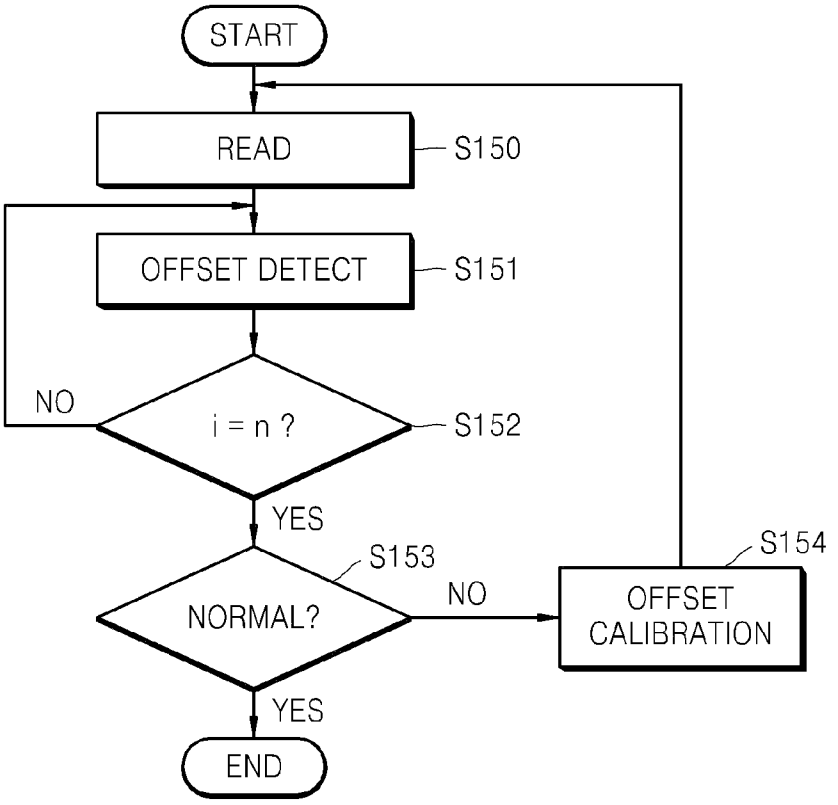
START
READ
S150
OFFSET DETECT
S151
NO
i = n ?
S152
YES
S153
NORMAL?
NO
S154
OFFSET CALIBRATION
YES
END

FIG. 16

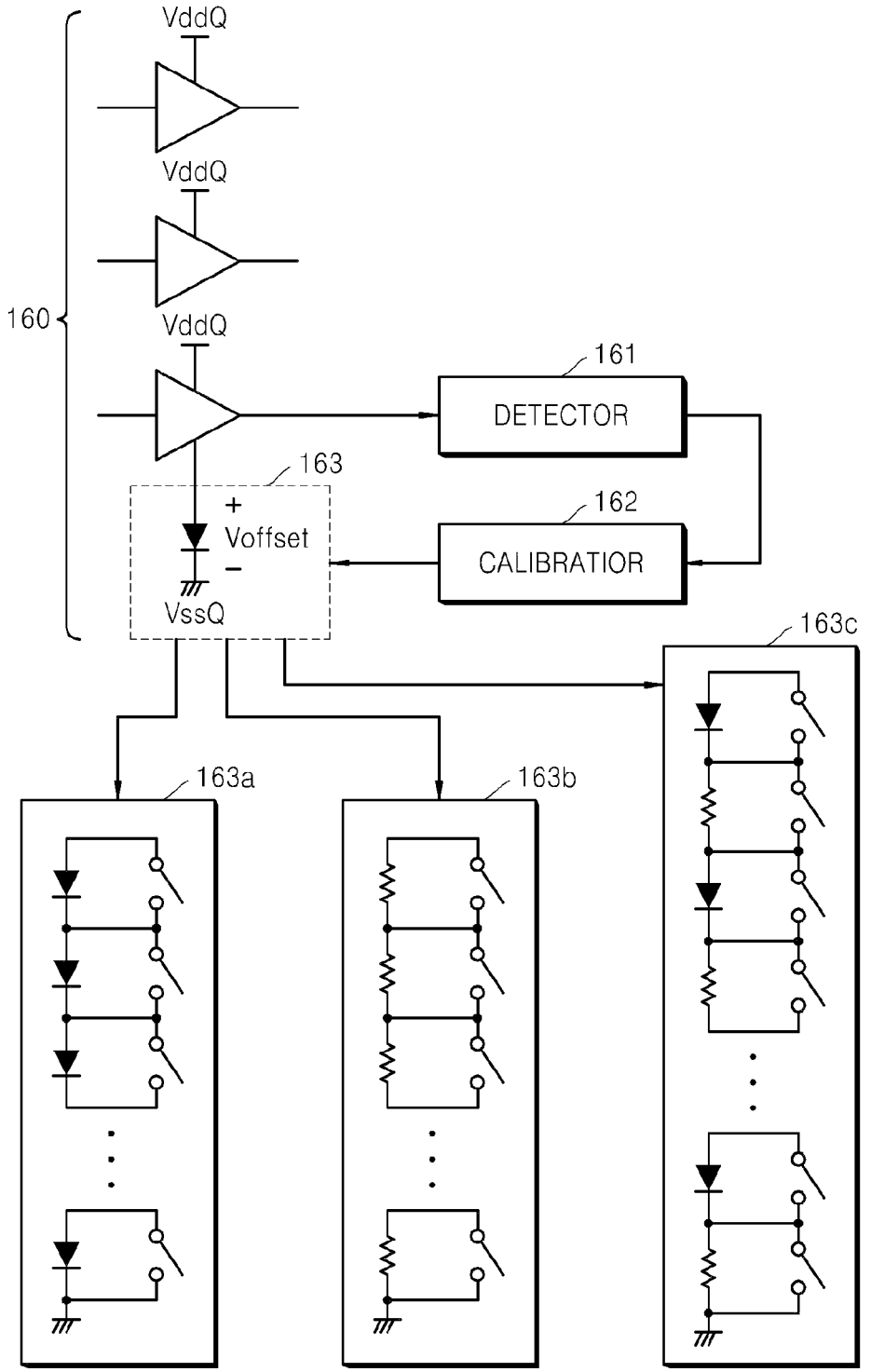
VddQ
VddQ
VddQ
160
161
DETECTOR
163
+
Voffset
−
VssQ
162
CALIBRATIOR
163c
163a
163b

FIG. 17A

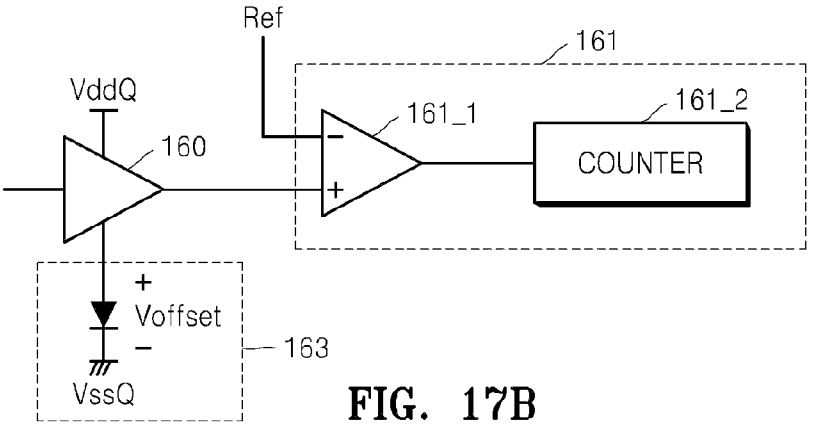

FIG. 17B

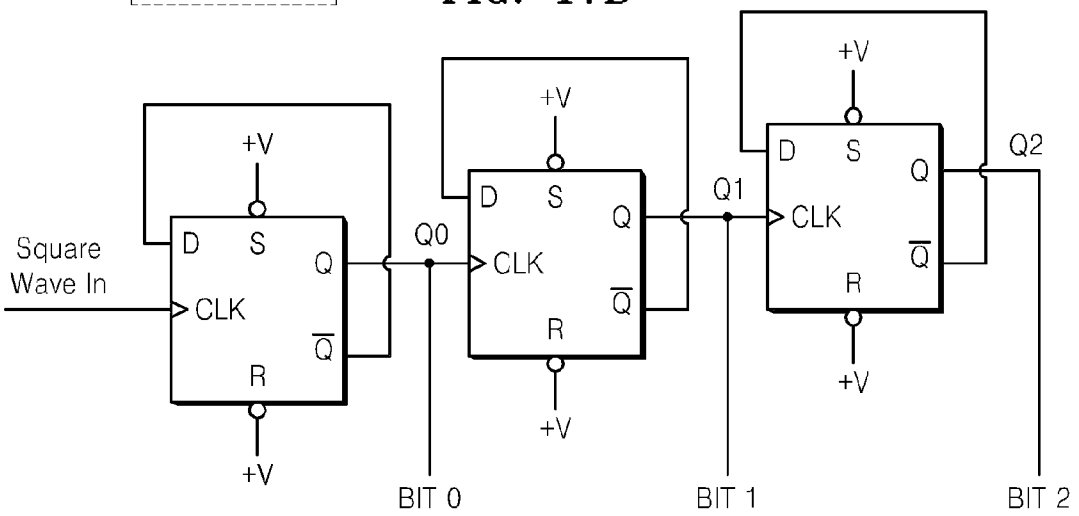

FIG. 17C

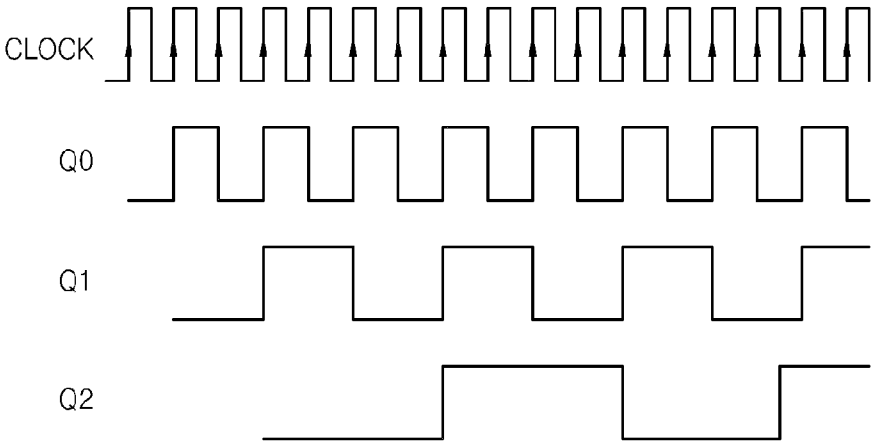

FIG. 18A

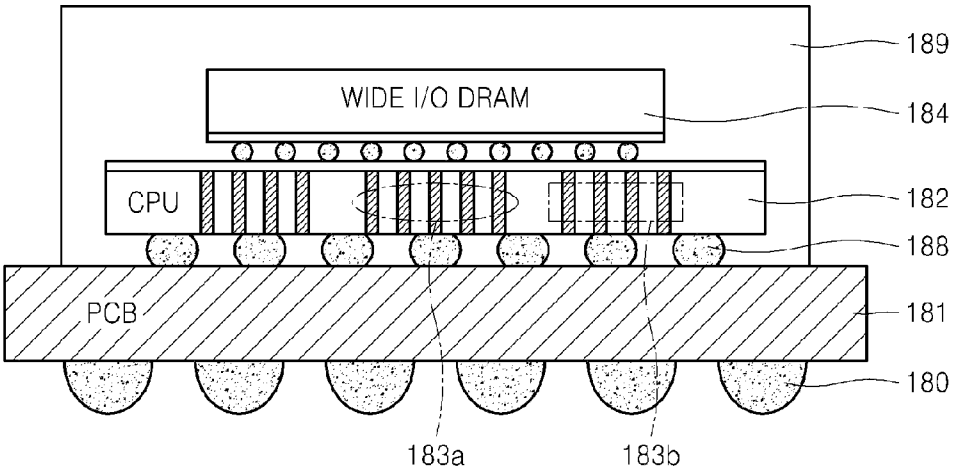

FIG. 18B

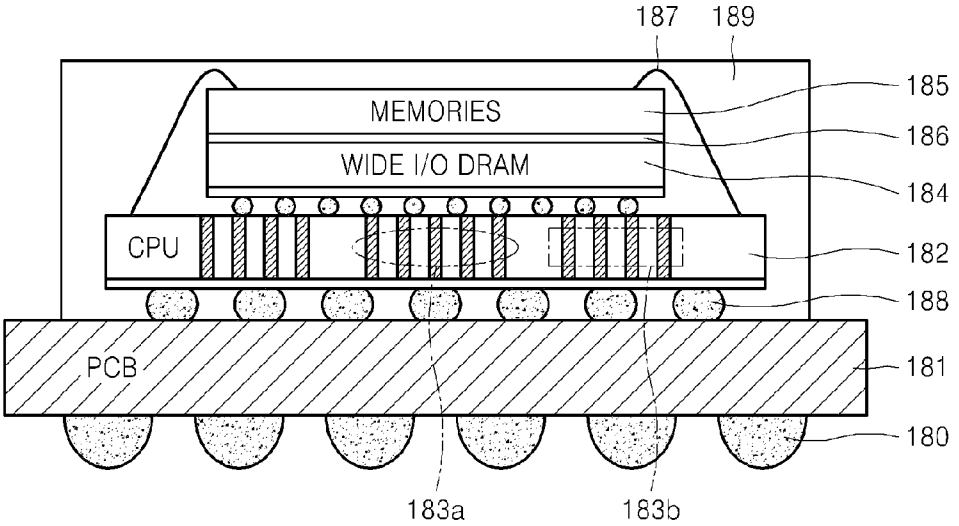

FIG. 19

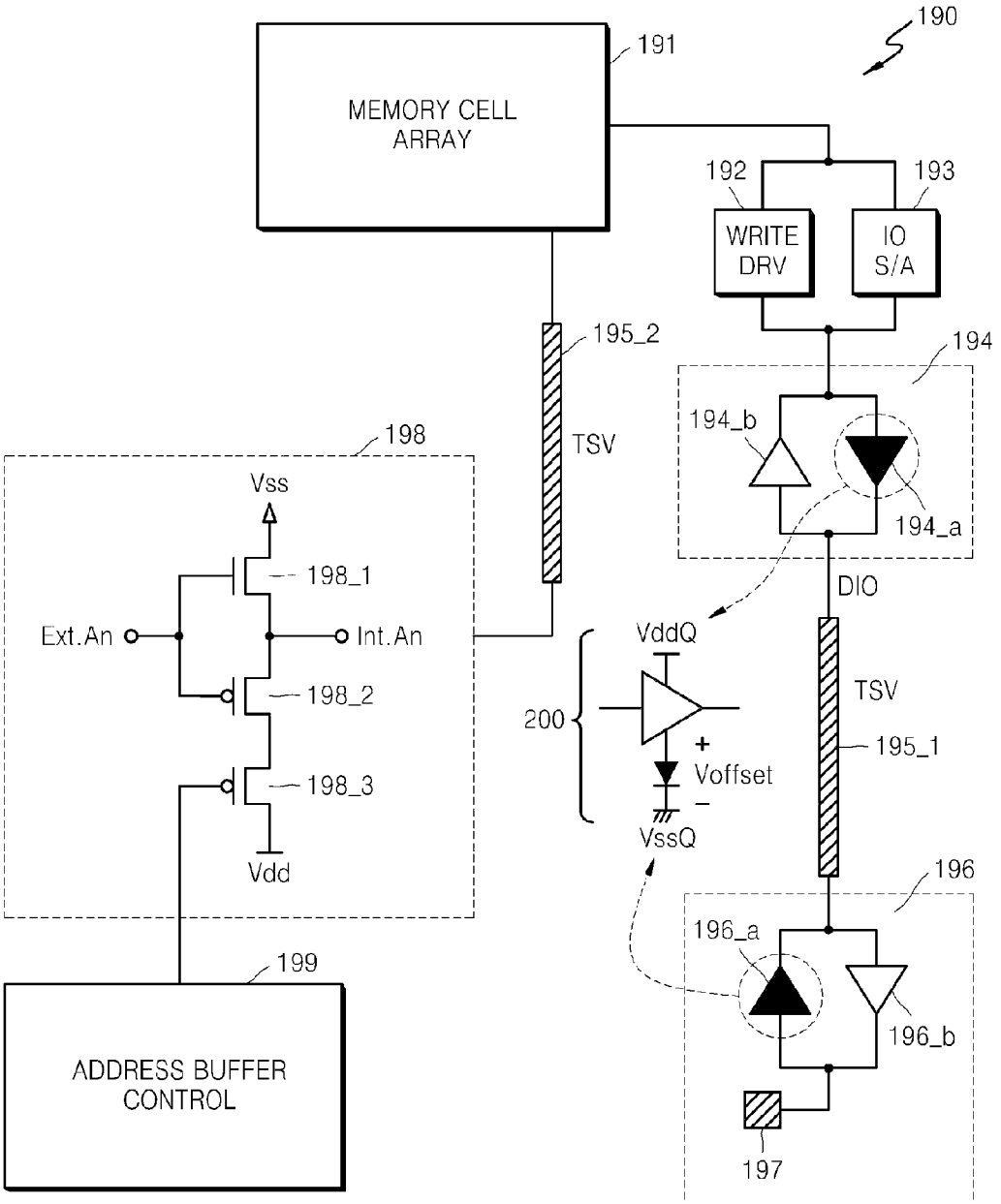
190
191
MEMORY CELL ARRAY
192
193
WRITE DRV
IO S/A
195_2
TSV
194
194_b
194_a
198
Vss
198_1
Ext.An
Int.An
198_2
198_3
Vdd
DIO
VddQ
200
+
Voffset
−
VssQ
TSV
195_1
196
196_a
196_b
197
199
ADDRESS BUFFER CONTROL

FIG. 20

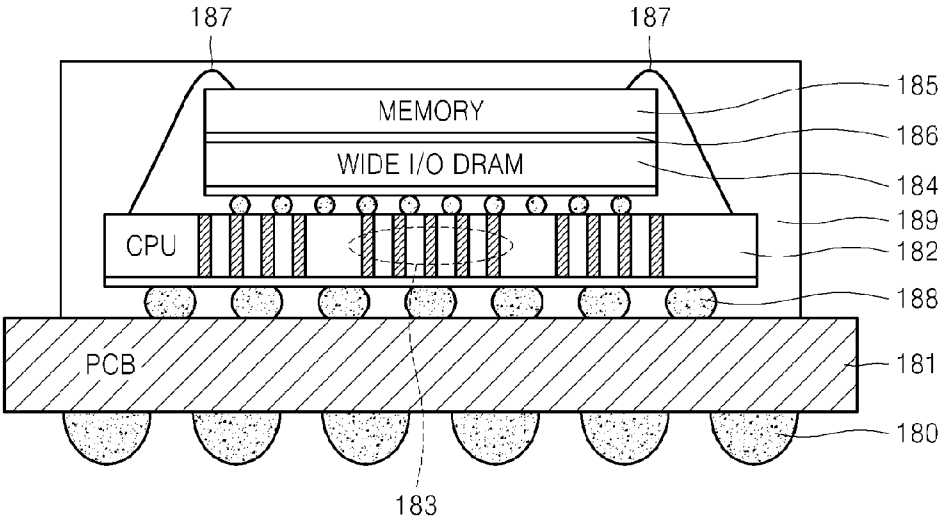
187
187
185
MEMORY
186
WIDE I/O DRAM
184
189
CPU
182
188
PCB
181
180
183

FIG. 21

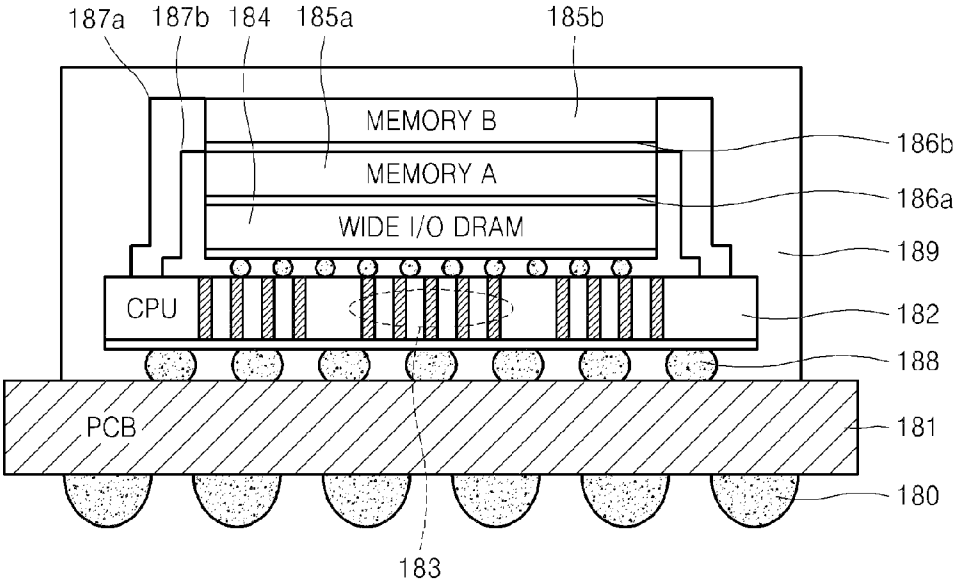
187a
187b
184
185a
185b
MEMORY B
186b
MEMORY A
186a
WIDE I/O DRAM
189
CPU
182
188
PCB
181
180
183

FIG. 22A

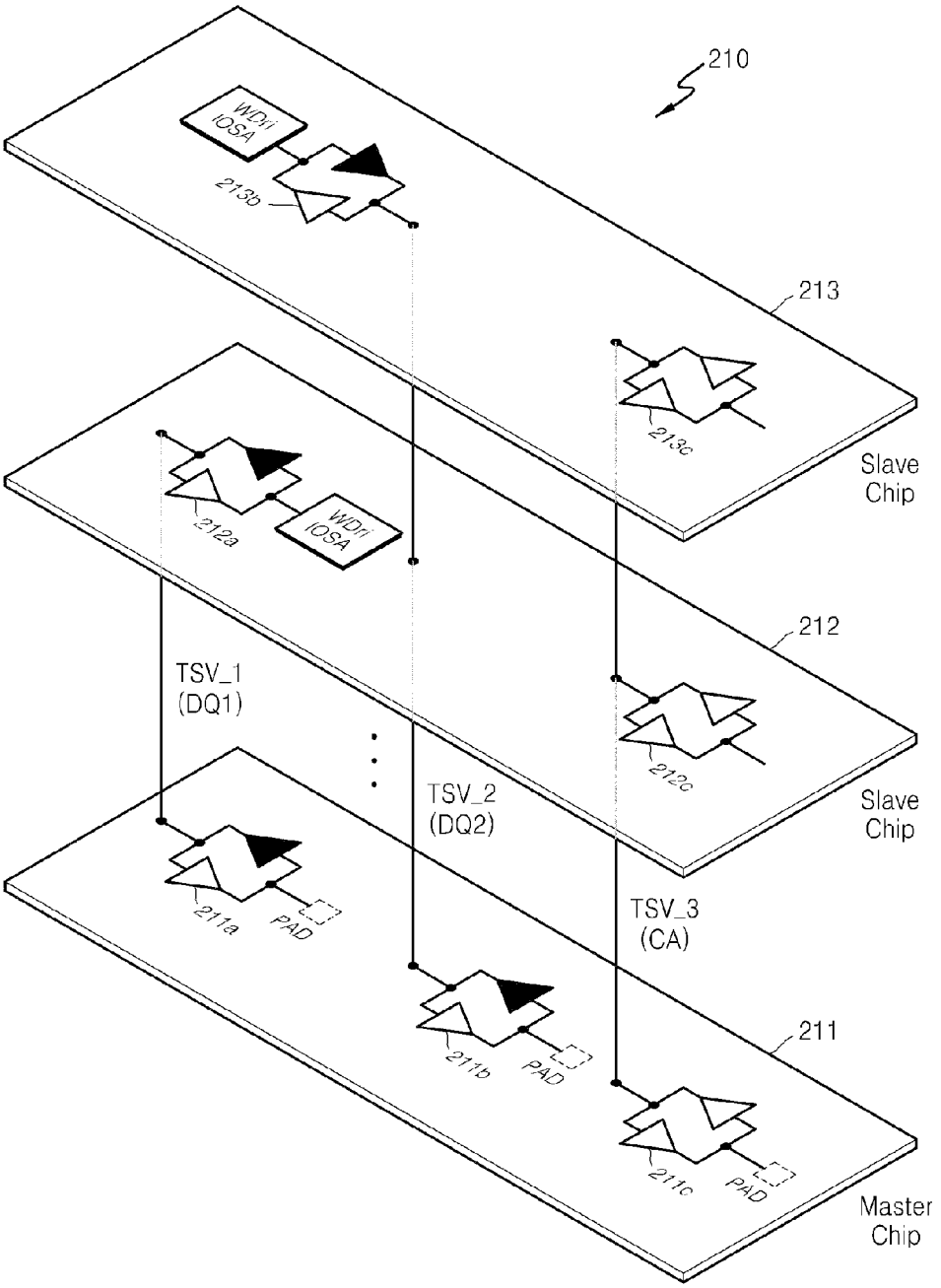
210
WDI/
IOSA
213b
213
213c
Slave
Chip
212a
WDI/
IOSA
212
TSV_1
(DQ1)
212c
TSV_2
(DQ2)
Slave
Chip
211a
PAD
TSV_3
(CA)
211
211b
PAD
211c
PAD
Master
Chip

FIG. 22B

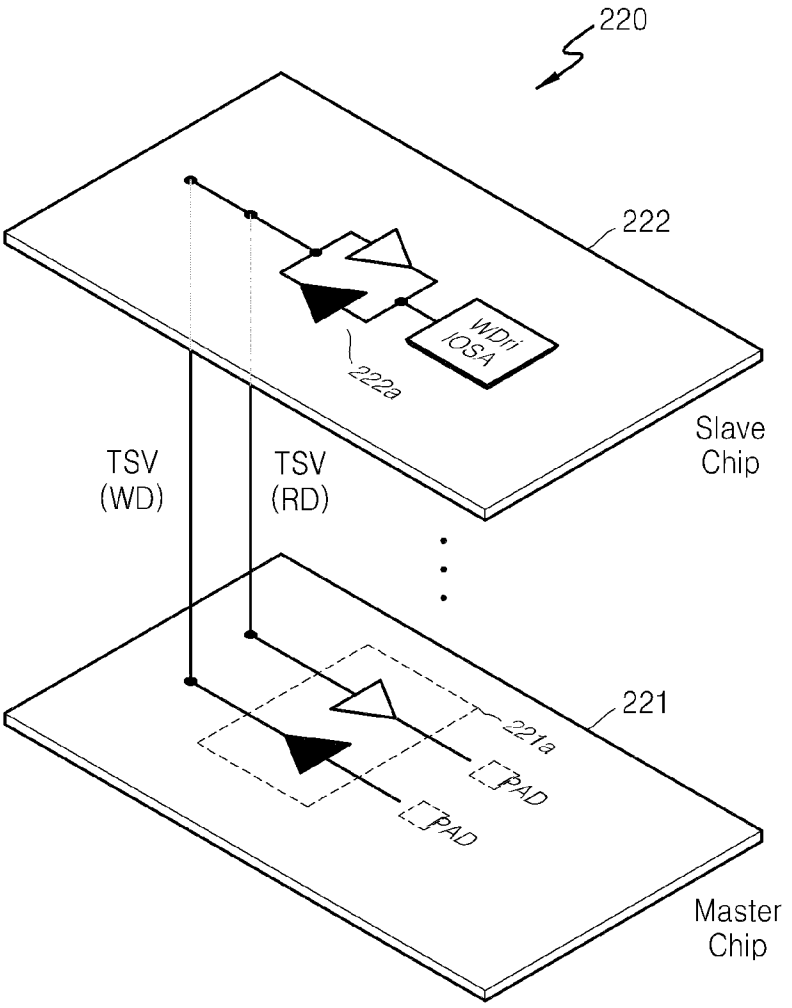
220
222
WDn
IOSA
222a
Slave
Chip
TSV
(WD)
TSV
(RD)
221
221a
PAD
PAD
Master
Chip

FIG. 23A

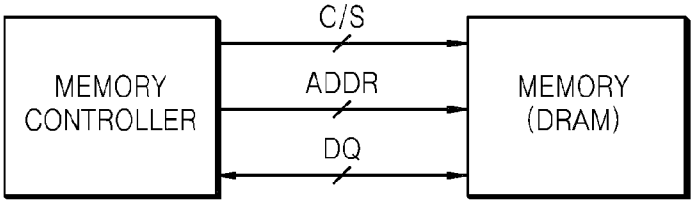

FIG. 23B

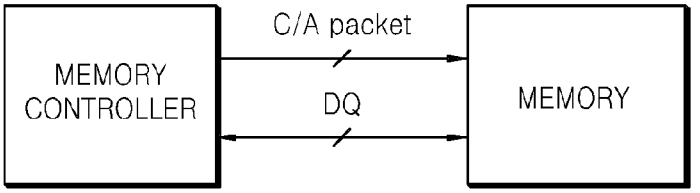

FIG. 23C

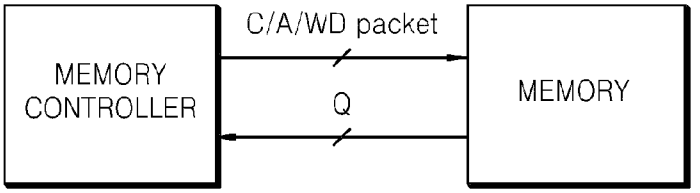

FIG. 23D

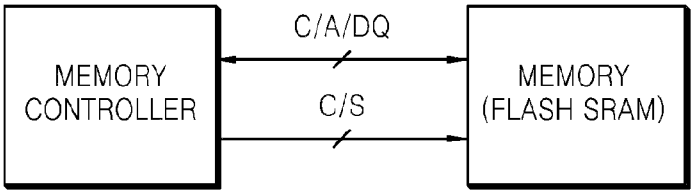

FIG. 24

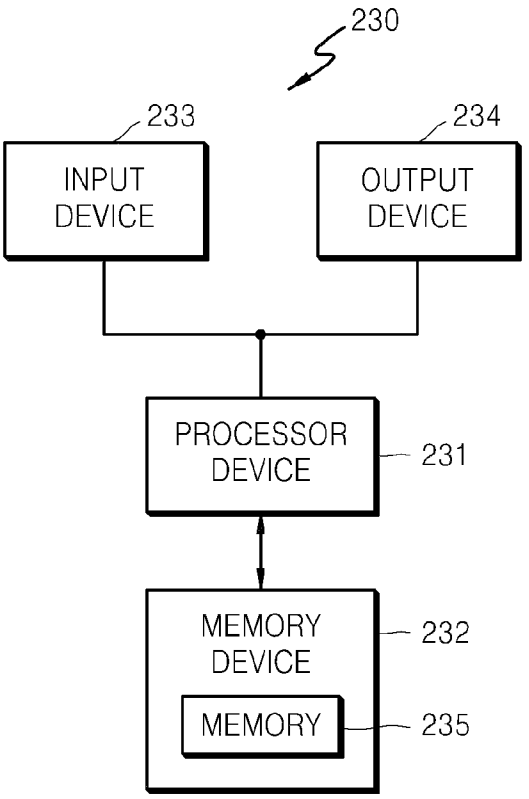
230
233
234
INPUT DEVICE
OUTPUT DEVICE
PROCESSOR DEVICE
231
MEMORY DEVICE
232
MEMORY
235

FIG. 25

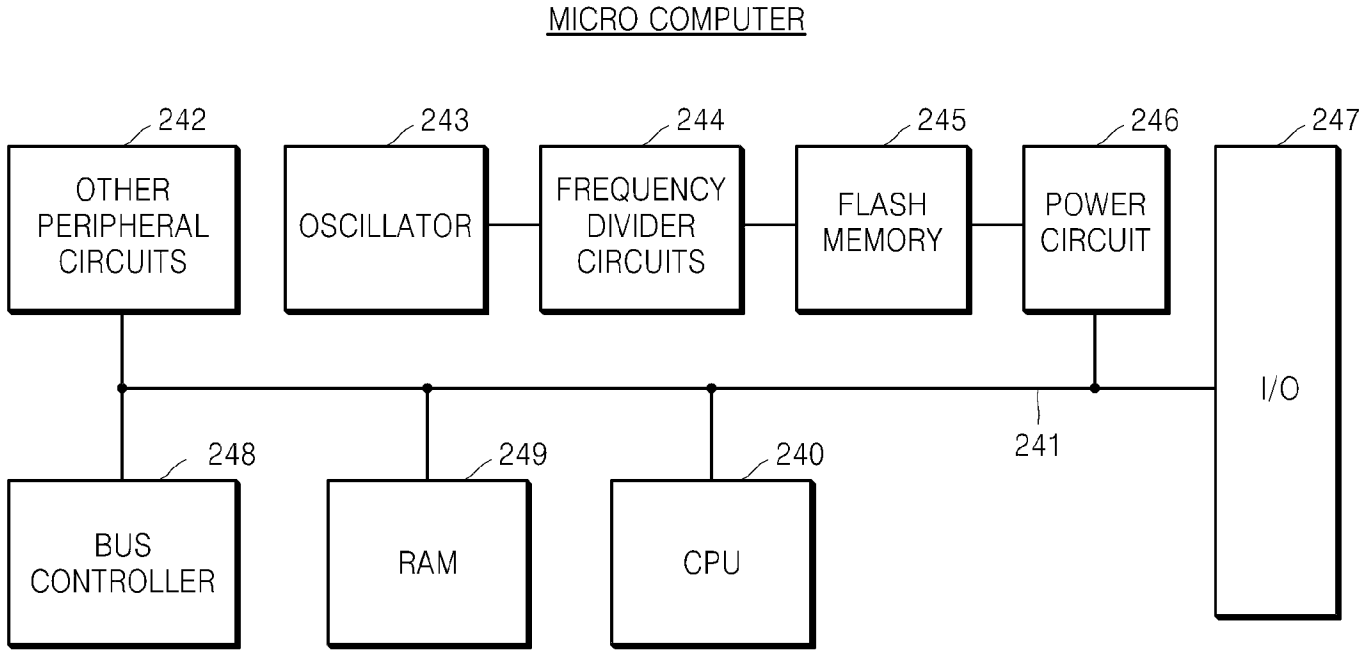
MICRO COMPUTER
242
OTHER PERIPHERAL CIRCUITS
243
OSCILLATOR
244
FREQUENCY DIVIDER CIRCUITS
245
FLASH MEMORY
246
POWER CIRCUIT
247
I/O
241
248
BUS CONTROLLER
249
RAM
240
CPU

FIG. 26A

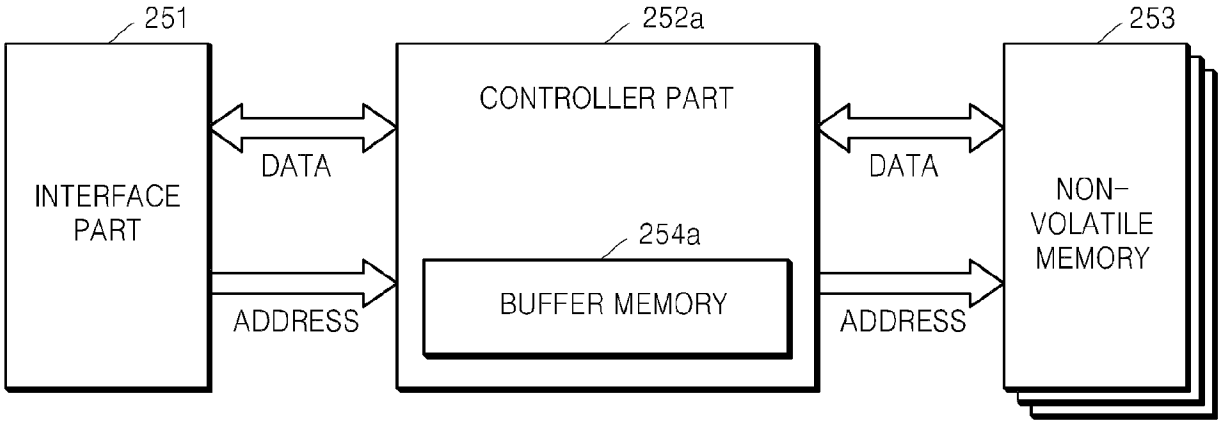

FIG. 26B

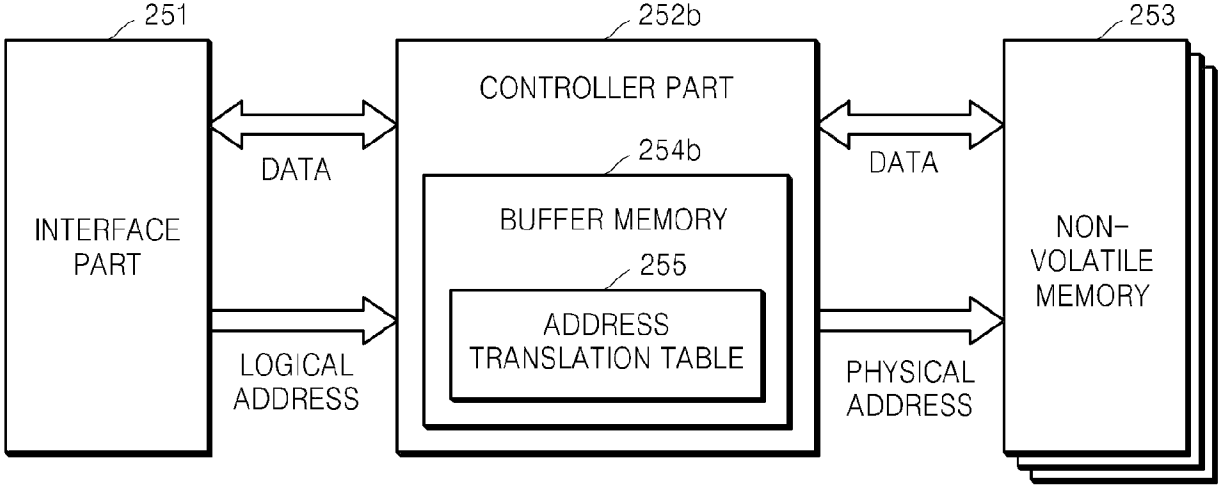

THREE-DIMENSIONAL STACKED STRUCTURE SEMICONDUCTOR DEVICE HAVING THROUGH-SILICON VIA AND SIGNALING METHOD FOR THE SEMICONDUCTOR DEVICE

CROSS-REFERENCE TO RELATED APPLICATIONS

A claim of priority is made to Korean Patent Application No. 10-2010-0058233, filed on Jun. 18, 2010, in the Korean Intellectual Property Office, the disclosure of which is incorporated herein in its entirety by reference.

BACKGROUND

The inventive concept relates to a semiconductor device having a three-dimensional (3D) structure, and more particularly, to a structure and method for offset signaling of a 3D-structure semiconductor device having a through-silicon via (TSV).

As semiconductor devices, for example, memory devices, have been highly integrated, high integration with typical two-dimensional (2D) structures has almost reached its limit. There remains the need for implementing a semiconductor memory device having a 3D structure exceeding a 2D structure in terms of integration, and research for implementing the semiconductor memory device also has been much attempted.

In the 3D semiconductor memory device, various signals such as data, commands, and addresses are transmitted, some or all of which are transmitted through a TSV. In a high-performance and high-integration semiconductor memory device, the signal transmission feature may be degraded, and such degradation may also occur when signal transmission is performed through the TSV.

SUMMARY

The inventive concept provides a semiconductor device having a three-dimensional (3D) structure, which is capable of overcoming the foregoing problems.

The inventive concept also provides a semiconductor device having a 3D structure, which can minimize an influence of a metal-oxide-semiconductor (MOS) capacitance of a TSV, and a signaling method for the semiconductor device.

According to an aspect of the inventive concept, there is provided a three-dimensional (3D) semiconductor device including a plurality of stacked layers and a through-silicon via (TSV) electrically connecting the plurality of layers, in which in signal transmission among the plurality of layers, the TSV transmits a signal that swings in a range from an offset voltage that is higher than a ground voltage to a power voltage.

According to another aspect of the inventive concept, there is provided a three-dimensional (3D) semiconductor device including a plurality of stacked layers and a through-silicon via (TSV) electrically connecting the plurality of layers, in which the TSV includes a first conductive material, an insulator is disposed between the first conductive material and a second conductive material of each layer, and the first conductive material, the insulator, and the second conductive material form a capacitor, and first and second logics of a signal transmitted through the TSV are higher than a level of the ground voltage.

According to another aspect of the inventive concept, there is provided a three-dimensional (3D) semiconductor device including a first layer including at least one memory cell and input/output buffer; a second layer comprising an interface circuit for interfacing with the memory cell and an external device and controlling the memory cell, the second layer being stacked with the first layer; at least one through-silicon via (TSV) electrically connecting the first layer and the second layer by passing through at least a portion of the first layer, wherein in signal transmission between the first layer and the second layer, the TSV transmits a signal that swings in a range from an offset voltage that is higher than a ground voltage to a power voltage.

According to another aspect of the inventive concept, there is provided a three-dimensional (3D) semiconductor device including a first layer including at least one memory cell and input/output buffer, a second layer including an interface with the memory cell and an external device and an interface circuit for controlling the memory cell, the second layer being stacked with the first layer, first and second through-silicon via (TSV) electrically connecting the first layer and the second layer by passing through at least a portion of the first layer, in which in signal transmission between the first layer and the second layer, the first TSV transmits a signal that swings in a range from an offset voltage that is higher than a ground voltage to a power voltage, and in signal transmission between the first layer and the second layer, the second TSV transmits a signal that swings in a range from the ground voltage to the power voltage.

BRIEF DESCRIPTION OF THE DRAWINGS

Exemplary embodiments of the inventive concept will be more clearly understood from the following detailed description taken in conjunction with the accompanying drawings in which:

FIG. **1** is a schematic diagram illustrating a cell array structure of a three-dimensional (3D) semiconductor memory device stacked with through-silicon vias (TSVs);

FIG. **2** is a diagram illustrating capacitance-voltage (C-V) characteristics of a metal-oxide-semiconductor (MOS) capacitance and an offset signaling operation according to an exemplary embodiment of the inventive concept;

FIG. **3** is a diagram illustrating an example of offset signaling in a 3D semiconductor device having a TSV structure, according to an exemplary embodiment of the inventive concept;

FIG. **4** is a block diagram illustrating in detail a data input/output path in a dynamic random access memory (DRAM) chip illustrated in FIG. **3**, according to an exemplary embodiment of the inventive concept;

FIG. **5** shows circuit diagrams illustrating examples of a input/output buffer having an offset circuit, according to exemplary embodiments of the inventive concept;

FIG. **6** shows block diagrams illustrating examples of offset signaling through an address path of the DRAM chip illustrated in FIG. **3**, according to exemplary embodiments of the inventive concept;

FIG. **7** is a circuit diagram illustrating an example in which an offset circuit is applied to the address path illustrated in FIG. **6**, according to an exemplary embodiment of the inventive concept;

FIGS. **8** and **9** are diagrams illustrating an embodiment modified from the example illustrated in FIG. **3**;

FIG. **10** is a diagram illustrating an embodiment modified from the embodiment illustrated in FIG. **9**, in which a load adjusting unit is further provided in the input/output buffer;

FIG. **11** is a cross-sectional view illustrating a stacked memory device according to another exemplary embodiment of the inventive concept;

FIGS. **12**A through **14** are diagrams illustrating various modifications of the stacked memory device illustrated in FIG. **11**;

FIG. **15** is a flowchart schematically illustrating an offset calibration process for offset signaling, according to an exemplary embodiment of the inventive concept;

FIG. **16** is a diagram schematically illustrating an example of a semiconductor device for the offset calibration process illustrated in FIG. **15**;

FIG. **17** is a diagram illustrating an example of a detector illustrated in FIG. **16**;

FIG. **18** show cross-sectional views illustrating examples of semiconductor devices to which high-speed and low-speed TSVs are applied;

FIG. **19** is a diagram illustrating an example of a semiconductor memory device illustrated in FIG. **18**;

FIGS. **20** and **21** are cross-sectional views illustrating modifications of the example of the semiconductor device illustrated in FIG. **18**;

FIGS. **22**A and **22**B are schematic diagrams illustrating modifications of a semiconductor device to which TSVs for transmitting data bi-directionally and unidirectionally are applied;

FIG. **23** is a block diagram illustrating an application example of the inventive concept connected with a memory controller;

FIG. **24** is a block diagram illustrating an application example of an electronic system including a 3D stacked structure semiconductor memory device according to an exemplary embodiment of the inventive concept;

FIG. **25** is a block diagram illustrating an application example of a single-chip micro computer including a 3D stacked structure semiconductor memory device according to an exemplary embodiment of the inventive concept; and

FIG. **26** is a block diagram illustrating an application example of a memory card to which a non-volatile 3D stacked structure semiconductor memory device according to an exemplary embodiment of the inventive concept is applied.

DETAILED DESCRIPTION OF THE EMBODIMENTS

Hereinafter, exemplary embodiments of the inventive concept will be described in detail with reference to the accompanying drawings, without any other intention than to provide thorough understanding of the inventive concept to those of ordinary skill in the art.

Memory devices include volatile memories such as dynamic random access memory (DRAM), static random access memory (SRAM), etc., and non-volatile memories which do not need to be refreshed, such as phase change random access memory (PRAM), resistive random access memory (RRAM) using variable resistance substances like complex metal oxides, and magnetic random access memory (MRAM) using ferromagnetic substances. Recently, a refresh operation has been applied to non-volatile memories.

All semiconductor devices, as well as the aforementioned memories, employ the concept of a three-dimensional (3D) structure. Although the 3D structure concept has already been used in the field of packaging, a conventional scheme is structured such that various terminals are disposed only on a side of a semiconductor chip and signal terminals of a plurality of chips are electrically connected using wire bonding, resulting in some problems in terms of complexity of wiring and power consumption.

To overcome these problems, a through-silicon via (TSV) technique has been proposed, in which an electrode perpendicularly passing through silicon, which is a semiconductor substrate material, is formed to provide a signal transmission path.

In expectation of improvements in integration, operating speed, power consumption, and manufacturing cost of a circuit, the TSV technique has been applied to the development of a chip having a multi-processor core, and there is fierce development competition in the field of memories, such as NAND flash memories and DRAMs, and hybrid structures thereof.

FIG. **1** is a schematic diagram illustrating a 3D semiconductor device **10** stacked with TSVs.

Referring to FIG. **1**A, the 3D semiconductor device **10** includes a plurality of layers **11_1** through **11_*n*** having a stacked structure in which the plurality of layers **11_1** through **11_*n*** are interconnected through at least one TSV **14**. Each of the plurality of layers **11_1** through **11_*n*** includes a plurality of circuit blocks **12** and a periphery circuit to implement functions of the 3D semiconductor device **10**. A semiconductor memory device including memory cells may be an example of the 3D semiconductor device **10**, and when the 3D semiconductor device **10** illustrated in FIG. **1**S is a semiconductor memory device, the plurality of layers **11_1** through **11_*n*** may be referred to as cell layers and the plurality of circuit blocks **12** may be implemented as memory blocks.

FIG. **1**B shows a part of a schematic plane view including the TSV **14** in the plurality of cell layers **11_1** through **11_*n***, and FIG. **1**C shows a cross-section taken along a line X-X' of FIG. **1**B.

Referring to FIG. **1**B, the TSV **14** composed of conductive material including metal such as copper (Cu) is disposed at the center of a silicon substrate **13** which surrounds the TSV **14**. Between the TSV **14** and the silicon substrate **13** is disposed an insulator **15** for insulation therebetween.

Referring to the TSV **14** and its surrounding structure shown in FIG. **1**, the TSV **14** composed of conductive material such as metal is disposed through the silicon substrate **13**, with the insulator **15**, such as a silicon oxide film, surrounding the TSV **14** between the TSV **14** and the silicon substrate **13**, such that the TSV **14**, the insulator **15**, and the silicon substrate **13** form a structure of a metal-oxide-semiconductor (MOS) capacitor.

FIG. **2** is a diagram illustrating MOS capacitance characteristics in a TSV structure and an embodiment using the MOS capacitance characteristics. Hereinafter, offset signaling through a TSV according to the inventive concept will be described with reference to FIGS. **1** and **2**.

As can be seen from the structure illustrated in FIG. **1**, the MOS capacitor formed of the TSV **14**, the insulator **15**, and the silicon substrate **13** has the same characteristics as general characteristics of a MOS capacitor having a Metal-Insulator-Semiconductor (MIS) structure.

FIG. **2**A is a graph illustrating capacitance-voltage (C-V) characteristics of a MOS capacitance and an offset signaling operation according to an embodiment of the inventive concept.

Generally, a lightly doped P-type silicon substrate or a lightly doped N-type silicon substrate is used as the silicon substrate **13**.

Due to the silicon substrate **13** doped as described above, carrier dynamics such as accumulation, depletion, and inversion occur in the silicon substrate **13** surrounding the insula-

tor **15** according to polarity and level of a voltage applied to the conductive TSV **14**. FIG. **2**A shows a carrier forming mode which changes according to a voltage applied to a gate and a change in capacitance C according to the carrier forming mode under influence of a gate voltage and frequency in a planar MOS capacitor, which is a representative MOS structure of the TSV **14**.

Referring to FIG. **2**A, when a high-frequency voltage, for example, a positive voltage is applied, depletion and deep depletion modes are formed where the capacitance C has low values. Such a MOS capacitance C, that is, the capacitance C acting as a parasitic capacitance of the TSV **14** used to interconnect layers, may work as charge loss and decoupling and capacitive loading with respect to the leaky silicon substrate **13** for a signal transmitted through the TSV **14**. This influence may distort and degrade a digital signal and increase power consumption. Therefore, low and constant values of the capacitance C are favorable for high-speed transmission, and the MOS capacitance C in the depletion or deep depletion mode is more favorable for signal transmission through the TSV **14**.

As indicated by [C] in FIG. **2**A, at full swing, like in typical complementary metal-oxide semiconductor (CMOS) digital signaling, for a 'logic low' signal having a higher value of the capacitance C than a 'logic high' signal, logic transition to digital 'logic low' is slowed down and there is more power consumption for the transition. That is, due to a sharp difference in value of capacitance C between 'logic low' and 'logic high', i.e., a balance difference between two signals, high-speed transmission is not easy to achieve.

For the foregoing reasons, in the inventive concept, for a signal transmitted through the TSV **14**, low values of the capacitance C and balanced values of the capacitance C are guaranteed in both 'logic low' and 'logic high' states through biased digital signaling or offset signaling, as indicated by [A] or [B], thereby solving the foregoing problems and improving the quality of a high-speed signal transmitted through the TSV **14**.

In other words, in a 3D stacked structure semiconductor device where layers are interconnected through the TSV **14**, during transmission of signals having 'logic low' and 'logic high' levels through the TSV **14**, offset signaling is applied to the signals such that a capacitance including the TSV **14**, the semiconductor substrate, and the insulator operate in a depletion mode or a deep depletion mode. For example, when a signal transmitted through the TSV **14** is a high-frequency signal, offset signaling is applied to the high-frequency signal such that the capacitor operates in a mode where a capacitance decreases as a voltage increases.

When offset signaling is applied, the 'logic low' level of the signal is a higher level than a voltage level corresponding to a boundary between an accumulation mode and the depletion mode (voltage level corresponding to a point (e.g., an Voffset point) in the depletion mode), rather than the voltage level corresponding to the boundary. In other words, in the case of full swing through a CMOS operation, 'logic low' and 'logic high' of the signal transmitted through the TSV **14** have higher levels than a ground voltage level and thus the TSV **14** transmits a signal which swings in a range from a level of an offset voltage Voffset higher than '0V' to a level of a power voltage VDDQ.

FIGS. **2**B and **2**C are circuit diagrams of examples of an input/output buffer for the aforementioned offset signaling. FIGS. **2**B and **2**C show any one of an input buffer and an output buffer included in the input/output buffer, and offset signaling according to the inventive concept may be applied to at least one of the input buffer and the output buffer.

Referring to FIG. **2**B, an input/output buffer **20**, which is supplied with a power voltage VddQ and a ground voltage VssQ and connected with a TSV, includes a driver circuit for driving data and an offset circuit **21** for offset signaling. When data is transmitted through the TSV, the offset circuit **21** adjusts the swing width of input/output data such that the data transmitted through the TSV fully swings from 'Voffset' that is higher than 'VssQ' to 'VddQ'. Such adjustment of the swing width is performed by the offset circuit **21** indicated by a diode symbol. That is, the input/output buffer **20** includes the offset circuit **21** connected between the driver circuit and the ground voltage VssQ.

FIG. **2**C shows a push-pull driver as an example of the input/output buffer **20** shown in FIG. **2**B. The push-pull driver may be implemented as an inverter, and may include, for example, a p-channel metal-oxide semiconductor (PMOS) transistor P which is connected to the power voltage VddQ to pull up the level of the input/output data and an n-channel metal-oxide semiconductor (NMOS) transistor N**1** which is connected to the offset voltage Voffset, which is provided by an NMOS transistor N**2** connected as a diode as an example of the offset circuit **21**, to pull down the level of the input/output data to an offset level. Thus, a data signal transmitted through the TSV fully swings to a CMOS level between the offset voltage Voffset and the power voltage VddQ.

As described above, the diode-connected NMOS transistor N**2** limits the swing level of the input/output buffer **20** such that full swing of data at the CMOS level is in a range between the offset voltage Voffset that is higher than the ground voltage VssQ and the power voltage VddQ.

Although signaling for input/output of data is shown in FIG. **2**, it may also equally apply to signaling of a command or an address signal, as well as signaling of data.

FIG. **3** is a diagram illustrating an example of offset signaling in a 3D semiconductor device **30** having a TSV structure, according to an exemplary embodiment of the inventive concept.

Referring to FIG. **3**, the 3D semiconductor device **30** having a TSV structure includes a DRAM chip **32** and an interface chip **31** stacked as upper and lower portions interconnected through at least one TSV **33**.

The interface chip **31** that constitutes the lower portion includes an address buffer **31_4** for inputting and buffering an address from an external device (not shown), a command buffer **31_3** for inputting, buffering, and decoding a command from the external device, a input/output buffer **31_5** for inputting or outputting data, a voltage generating unit **31_1** for generating a required power voltage, and a periphery circuit **31_2** including logic for controlling overall operation of the interface chip **31**.

The DRAM chip **32** that constitutes the upper portion includes a memory cell array **32_1** including a plurality of memory blocks each including a plurality of memory cells **32_7** having various structures of a single capacitor and a single transistor or a single transistor and disposed in various ways with word lines WL, bit lines BL, and sense amplifiers (not shown); a column decoder **32_2** which inputs and decodes an address and outputs a column address for selecting a column line of a respective memory block; a row decoder **32_3** which inputs and decodes an address and outputs a row address for selecting a row line of a respective memory block; a write driver **32_4**; an input/output sense amplifier **32_5**; and an input/output buffer **32_6**.

The input/output buffer **32_6** includes an input buffer **32_6***b* and an output buffer **32_6***a*. The input/output buffer **32_6** of the upper DRAM chip **32** receives a signal from the interface chip **31** through the TSV **33** or transmits a signal to

the interface chip **31** through the TSV **33**. When the signal passing through the TSV **33** is a data signal, the output buffer **32_6***a* has to transmit a signal (e.g., read data) through the TSV **33**, and to this end, the output buffer **32_6***a* includes an offset circuit unit **34** for the aforementioned offset signaling, such that a signal transmitted through the TSV **33** swings in a range from 'Voffset' that is higher than '0V' to the power voltage VddQ.

The interface chip **31** also includes a input/output buffer **31_5**. In the 3D semiconductor device **30**, a buffer for receiving a signal through a pad and delivering the signal into the 3D semiconductor device **30** may be referred to as an input buffer and a buffer for outputting a signal from the 3D semiconductor device **30** to the external device may be referred to as an output buffer. However, in light of each chip, a buffer for outputting a signal through a TSV may be referred to as an output buffer and a buffer for receiving a signal through the TSV may be referred to as an input buffer. In the following description of the inventive concept, the buffer for outputting a signal through a TSV will be referred to as an output buffer.

An output buffer **31_5***a* of the interface chip **31** has to transmit a signal received through a pad **31_6** (e.g., write data) to the upper DRAM chip **32** through the TSV **33**, and to this end, the output buffer **31_5***a* includes the offset circuit unit **34** for the aforementioned offset signaling, such that a signal transmitted through the TSV **33** swings in a range from 'Voffset' that is higher than '0V' to the power voltage VddQ.

In the foregoing example, the DRAM chip **32** is stacked as a single layer, but a plurality of layers each including the DRAM chip **32** may be stacked and interconnected through the TSV **33**.

The interface chip **31** may be disposed as the lowermost layer, as illustrated, between layers, or the uppermost layer. While the interface chip **31** is provided in the 3D semiconductor device **30** in FIG. **3**, it may also be implemented with a package separate from the 3D semiconductor device **30**. Although the 3D semiconductor device **30** includes a plurality of chips, including the interface chip **31** and the DRAM chip **32** in FIG. **3**, a layer where a logic circuit for interfacing with an external device is disposed and a plurality of layers where DRAM cells are disposed respectively may be provided in a single memory chip and the layers may have a vertical stack structure.

As described with reference to FIG. **3**, in the case of signal transmission/reception through the TSV **33**, each chip, e.g., the interface chip **31** or the DRAM chip **32**, includes an input buffer and/or output buffer connected to the TSV **33**. The input buffer and the output buffer each may include a driving circuit in the form of a CMOS driving circuit disposed at the last stage, and may also include other circuits for controlling the driving circuit. In each chip, offset signaling is applied to a buffer which transmits a signal through the TSV **33** (for example, the output buffer **31_5***a* of the interface chip **31** and the output buffer **32_6***a* of the DRAM chip **32**). For offset signaling, the offset circuit unit **34** shown in FIG. **3** is implemented by disposing an offset circuit (e.g., a diode) between the CMOS driving circuit and the ground voltage VssQ.

In FIG. **3**, the data input/output circuit **32_6** for offset signaling is added between the write driver **32_4** for transmitting and receiving data and the input/output sense amplifier **32_5**, and the TSV **33**. However, the embodiment of the inventive concept is not limited to this example. For instance, the output buffer **32_6***a* may be included at the last stage of the input/output sense amplifier **32_5** if data from the input/output sense amplifier **32_5** is transmitted through the TSV **33**, or the input buffer **32_6***b* may included at the first stage of the write driver **32_4** if the write driver **32_4** receives data through the TSV **33**. Alternatively, if the input/output sense amplifier **32_5** includes a driver of a CMOS type at the last stage, the offset circuit (e.g., a diode) may be disposed in a driver at the last stage of the input/output sense amplifier **32_5**.

FIG. **4** is a block diagram illustrating in more detail a data input/output path in the DRAM chip **32** illustrated in FIG. **3**.

Referring to FIG. **4**, the data input/output path includes the memory cell array **32_1** including the plurality of memory cells **32_7**; the input/output sense amplifier **32_5** (IO S/A) for sensing data output from the memory cell array **32_1** and amplifying the data to a predetermined level; the write driver **32_4** for writing input data to the memory cell array **32**; a data input/output line DIO connected with the TSV (not shown); the input buffer **32_6***b* for inputting write data transmitted through the data input/output line DIO; and the output buffer **32_6***a* for providing read data provided through the input/output sense amplifier **32_5** through the data input/output line DIO. The memory cell array **32_1** includes the plurality of memory blocks illustrated in FIG. **3**.

Although not shown in FIG. **4**, a bit line sense amplifier, a local input/output line, a local sense amplifier, a global input/output line, and a global sense amplifier may be further provided between the memory cell array **32_1** and the input/output sense amplifier **32_5**/the write driver **32_4**.

The data input/output path shown in FIG. **4** may also include a multiplexer and a detailed structure and a description thereof will not be provided herein.

In the foregoing structure, in a data read operation, the output buffer **32_6***a* has to provide data provided from an address of the memory cell array **32_1** to a chip disposed on another layer through the data input/output line DIO and the TSV (not shown) at the next stage of the data input/output line DIO, and to this end, an offset circuit may be further provided to minimize an influence of a MOS capacitance of the TSV. The offset circuit has components shown in FIGS. **2**B and **2**C.

FIG. **5** shows circuit diagrams illustrating examples of a input/output buffer having an offset circuit.

FIG. **5**A shows an embodiment of the input buffer **32_6***b* and the output buffer **32_6***a* illustrated in FIG. **4**, and FIG. **5**B shows an example where a pad **32_8** and a load adjusting unit **32_9** are included in the structure of the input buffer **32_6***b* and the output buffer **32_6***a* illustrated in FIG. **4**. Although the input buffer **32_6***b* for receiving data is implemented with an input buffer of an inverter type in FIG. **5**, the input buffer **32_6***b* may also be implemented with a differential amplifier including two pairs of NMOS and PMOS transistors connected in the form of a current mirror and may also be implemented in various forms. In particular, for high-speed data transmission/reception, the input buffer **32_6***b* is desirably implemented with the differential amplifier.

With reference to FIGS. **5**A and **5**B, a description will now be made of data read and write operations with respect to the memory cell array **32_1**.

Referring to FIG. **5**A, the output buffer **32_6***a* buffers output data DOB of a memory in response to an output enable signal PRB and outputs the buffered output data DOB to a data input/output signal line L**1**. The input/output signal line L**1** is connected to the TSV (not shown). The input buffer **32_6***b* receives and buffers input data from the input/output signal line L**1** to transmit the input data into the memory.

The output buffer **32_6***a* includes an OR gate **51**, an inverter **52**, an AND gate **53**, a PMOS transistor MP**1**, and an NMOS transistor MN**1**.

The OR gate **51** performs an OR operation on the output enable signal PRB and the output data DOB. The inverter **52** inverts the output enable signal PRB. The AND gate **53** per-

forms an AND operation on an output signal of the inverter **52** and the output data DOB. The PMOS transistor MP**1** has a gate to which the output signal of the OR gate **51** is applied, a source connected to the power voltage VddQ, and a drain connected to the input/output signal line L**1**.

An offset circuit **55** is disposed between the NMOS transistor MN**1** and the ground voltage VssQ, such that a CMOS level of output data transmitted through the data input/output signal line L**1** and the TSV (not shown) at the next stage of the data input/output signal line L**1** fully swings between the power voltage VddQ and the offset voltage Voffset that is higher than the ground voltage VssQ.

The input buffer **32_6***b* includes a PMOS transistor MP**2**, an NMOS transistor MN**2**, and an inverter **54**.

The PMOS transistor MP**2** has a gate for receiving input data from the input/output signal line L**1** and a source connected to the power voltage VddQ. The NMOS transistor MN**2** has a gate connected to the gate of the PMOS transistor MP**2**, a drain connected to a drain of the PMOS transistor MP**2**, and a source connected to the ground voltage VssQ. The inverter **54** inverts a drain voltage of the NMOS transistor MN**2** and generates memory cell input data DI.

A input/output buffer shown in FIG. **5**B further includes the load adjusting unit **32_9** and the pad **32_8**, in addition to components of the input/output buffer shown in FIG. **5**A, and thus identical components have been indicated by identical reference numerals throughout FIGS. **5**A and **5**B and a detailed description thereof will not be provided herein.

When the pad **32_8** is disposed in each layer in a structure where a plurality of layers are stacked with a TSV, the pad **32_8** may be used to conduct a test. In this case, the TSV is positioned at the next stage of the pad **32_8**.

The load adjusting unit **32_9** adjusts a load of the input/output signal line L**1** in response to the output enable signal PRB, and to this end, the load adjusting unit **32_9** includes a termination resistor Term and an NMOS transistor MN**3**. The termination resistor Term has a first terminal connected to the input/output signal line L**1**. The NMOS transistor MN**3** is connected between a second terminal of the termination resistor Term and the ground voltage VssQ, and is controlled by the output enable signal PRB.

The operation of the input/output buffer having the foregoing structure will be described in association with data input/output with respect to an actual memory based on the input/output buffer illustrated in FIG. **5**B. This is because, the input/output buffer illustrated in FIG. **5**B also includes components illustrated in FIG. **5**A and thus the description for the input/output buffer of FIG. **5**B can substitute for the operation of the components illustrated in FIG. **5**A.

When data is read and output from a memory cell array (not shown), the output data DOB is buffered by the output buffer **32_6***a* and transmitted to the pad **32_8** through the input/output signal line L**1**. Thereafter, the output data DOB is transmitted through the TSV (not shown), to an interface chip and then another chip set such as a memory controller (not shown), or directly to the chip set. Herein, for description's sake, transmission to the interface chip will not be described and transmission only to the chip set will be described.

When the output enable signal PRB is at 'logic low', data output from the memory cell array is transmitted to an external chip set through the pad **32_8**. When the output enable signal PRB is at 'logic high', the output signal of the OR gate **51** goes to 'logic high' and the output signal of the AND gate **53** goes to 'logic low'. Thus, both the PMOS transistor MP**1** and the NMOS transistor MN**1** enter an OFF state. That is, when the output enable signal PRB is at 'logic high', the output data DOB of the memory is not transmitted to the pad **32_8**.

When the output enable signal PRB is at 'logic low' and the output data DOB is at 'logic high', the output signal of the OR gate **51** goes to 'logic high' and the output signal of the AND gate **53** goes to 'logic high'. Thus, the PMOS transistor MP**1** enters the OFF state and the NMOS transistor MN**1** enters an ON state. In this case, the voltage of the input/output signal line L**1** goes to 'logic low'. That is, the voltage of the input/output signal line L**1** is a voltage signal in which the output data DOB is inverted.

When data is input from outside the memory to inside the memory, the data is input to the memory from the external chip set through the TSV and the pad **32_8**. The input data received by the pad **32_8** is input to the input buffer **32_6***b* through the input/output signal line L**1**. The input buffer **32_6***b* buffers the input data and transmits the data to the memory cell array.

The load adjusting unit **32_9** adjusts the load of the input/output signal line L**1** in response to the output enable signal PRB. When the output enable signal PRB is at 'logic low', that is, when data is read, the NMOS transistor MN**3** enters the OFF state and the termination resistor Term does not affect the input/output signal line L**1**. When the output enable signal PRB is at 'logic high', that is, when data is written, the NMOS transistor MN**3** enters the ON state and the termination resistor Term is connected between the input/output signal line L**1** and the ground voltage VssQ.

Thus, load on the input/output signal line L**1** is small when data in the memory is output, and load on the input/output signal line L**1** is large when data is input from outside the memory. In other words, when data is received from outside the memory, the signal integrity of the data is improved and the waveform of the signal becomes less distorted.

Although the application example of the offset circuit for offset signaling in the input/output buffer has been described in FIGS. **4** and **5**, such offset signaling may also be applied to a path of a command/address.

FIG. **6** shows block diagrams illustrating examples of offset signaling through an address path of the DRAM chip **32** illustrated in FIG. **3**.

Referring to FIG. **6**A, the address path includes an address buffer **60** for receiving and buffering an external address signal Ext.An to output an internal address signal Int.An. To control transmission of an address signal through the address buffer **60**, the DRAM chip **32** further includes an address buffer controller **61**. The address buffer controller **61** includes an inverter **610**, a first NAND gate **611**, and a second NAND gate **612**.

Memory control signals, including a chip selection signal CSB, a row address signal RASB, a column address strobe CASB, and a write enable signal WEB, are provided as commands in various forms through logic combinations thereof to a memory device.

The memory control signals may include at least two selected from a group consisting of the chip selection signal CSB, the row address signal RASB, the column address strobe CASB, and the write enable signal WEB.

The inverter **610** inverts the chip selection signal CSB. The first NAND gate **611** receives a memory control signal and performs a NAND operation. Although the first NAND gate **611** is implemented with a NAND gate, the first NAND gate **611** may also be implemented with an AND gate and an inverter or a NOR gate and an inverter. That is, any gate can be used as long as the gate receives the memory control signal and outputs a NAND operation result.

The second NAND gate **612** receives an output signal of the inverter **610** and an output signal of the first NAND gate **611** and performs a NAND operation, and an output signal of the second NAND gate **612** controls the address buffer **60**.

Herein, the NAND operation result of the second NAND gate **612** is an operation control signal where the second NAND gate **612** generates an operation control signal in a second state during a non-operation period where a semiconductor memory device does not perform a data accessing operation and generates an operation control signal in a first state during an operation period where the semiconductor memory device performs the data accessing operation.

Such an operating process of the address buffer controller **61** may be briefly described in Table 1.

TABLE 1

CSB	RASB	CASB	WEB	First NAND	Second NAND
0	1	1	1	0	1
1	X	X	X	X	1

In Table 1, "0" and "1" are logic values and 'X' indicates a 'Don't Care' state where a logic value may be any one of "0" and "1".

As can be seen from Table 1, for the chip selection signal CSB having a logic value "1", regardless of the NAND operation result of the first NAND gate **611**, the NAND operation result of the second NAND gate **612** is "1" due to characteristics of the NAND operation, such that the address buffer **60** is disabled.

By doing so, an output signal of the address buffer **60**, i.e., the internal address signal Int.An, is not output during the non-operation period, thereby reducing power consumption.

FIG. **6**B illustrates an example where the load adjusting unit **62** is disposed at an input terminal of the address buffer **60**. As described with reference to FIG. **5**B, signal integrity can be improved by providing a load to the input/output signal line (The input/output line L**1** in FIG. **5** or the input/output line DIO in FIG. **4**?), and the load adjusting unit **62** for this end may be disposed at an input terminal for an address as shown in FIG. **6**B in a similar manner to a structure where the load adjusting unit **62** is disposed at an input terminal for data. The address buffer **60** may be provided in the interface chip **31** illustrated in FIG. **3**, and receives the external address signal Ext.An from an external device through a pad of the interface chip **31**, buffers the external address signal Ext.An, generates the internal address signal Int.An as the buffered address, and provides the internal address signal Int.An to the DRAM chip **32** through the TSV. Since the address buffer **60** applies offset signaling in the generation of the internal address signal Int.An, the internal address signal Int.An has a voltage level which fully swings between the power voltage Vdd and the offset voltage Voffset.

The load adjusting unit **62** may be included as a termination resistor in the 3D semiconductor device **30**. When the address buffer **60** is included in the interface chip **31**, the load adjusting unit **62** is connected to an input terminal of the address buffer **60** of the interface chip **31**. When the load adjusting unit **62** is applied to the address buffer **60**, the load adjusting unit **62** may be disposed in a module termination form outside the 3D semiconductor device **30**. For example, in a memory module (not shown) where a plurality of 3D semiconductor devices **30** are mounted, the memory module may include an address transmission line (not shown) for transmitting an address to the 3D semiconductor devices **30**, and the load adjusting unit **62** may be connected to the address transmission line.

FIG. **7** is a diagram equivalently illustrating an example where an offset circuit **603** according to the inventive concept is applied to the address buffer **60** in the address path illustrated in FIG. **6**. For convenience's sake, the operation of the address buffer **60** illustrated in FIG. **6**A will be used as an example.

Referring to FIG. **7**, the address buffer **60** includes a CMOS inverter including an NMOS transistor **600** and a PMOS transistor **601**; a PMOS transistor **602** (hereinafter, will be referred to as an access transistor) which is connected between the CMOS inverter and the power voltage Vdd and has a gate controlled by an output of the address buffer controller **61**, and the offset circuit **603** which is interposed between the CMOS inverter and the ground voltage Vss to perform offset signaling on the internal address signal Int.An provided through the TSV (not shown).

Hereinafter, referring to Table 1 and FIG. **7**, a description will be made of an operation in which the address buffer **60** is controlled by the address buffer controller **61** during the non-operation period of a 3D semiconductor memory device.

When the non-operation period is activated by a memory control signal, that is, when the output of the second NAND gate **612** is "1", the access transistor **602** is turned off, such that the power voltage Vdd is not provided to the CMOS inverter.

In this case, in spite of reception of the external address signal Ext.An, the internal address signal Int.An is not output due to deactivation of the address buffer **60**. That is, the address buffer controller **61** deactivates the address buffer **60** when the result based on the memory control signal corresponds to the non-operation period, as in Table 1.

The address buffer **60** shown in FIG. **7** can be implemented with a differential amplifier including two pairs of NMOS and PMOS transistors connected in the form of a current mirror, and can also be implemented in various forms.

FIG. **8** is a diagram illustrating a modified embodiment of FIG. **3** in which the interface chip **31** includes a load adjusting unit **31_7** proposed in FIG. **5**B between the output buffer **31_5***a* and the pad **31_6**.

Once a data read command is generated from the interface chip **31** or a memory controller provided separately as an external chip set, the load adjusting unit **317** is turned off and thus does not affect the data input/output line (DIO). Upon generation of a data write command, the load adjusting unit **31_7** is turned on and thus provides a load to the data input/output line (DIO), thereby improving signal integrity.

The load adjusting unit **31_7** can be implemented in various forms such as a mother board termination (MBT) form, a module termination (MT) form, an on die termination (ODT) form, etc.

The load adjusting unit **317** may also be implemented with various voltage levels such as a center tap termination (CTT), a power voltage termination (VddQ termination), or a ground voltage termination (VssQ termination).

Also in the embodiment shown in FIG. **8**, the interface chip **31** includes the input/output buffer **31_5** for transmitting a signal to or receiving a signal from the TSV **33**, and the DRAM chip **32** includes the input/output buffer **32_6** for transmitting a signal to or receiving a signal from the TSV **33**. Offset signaling is applied to the output buffer **31_5***a* of the interface chip **31** and the output buffer **32_6***a* of the DRAM chip **32**. If the load adjusting unit **31_7** is connected to an input terminal of the output buffer **31_5***a* of the interface chip **31**, the voltage level of the input terminal of the output buffer

31_5*a* may be changed according to the load disposition form of the load adjusting unit **31_7** (e.g., a CTT, a VddQ termination, or a VssQ termination), and in this case, the level of the offset voltage Voffset based on offset signaling may also be changed.

In FIG. **8**, components which are identical to those shown in FIG. **3** have been indicated by identical reference numerals and structures and detailed operations thereof will not be described.

FIG. **9** is a diagram illustrating another modified embodiment of FIG. **3** in which the DRAM chip **32** includes the pad **32_8** illustrated in FIG. **5**B and the input/output buffer **32_6** of the DRAM chip **32** interfaces data with the interface chip **31** through the pad **32_8** and the TSV **33**. A load adjusting unit is included in FIG. **5**B, but not in FIG. **9**.

FIG. **10** is a diagram illustrating a modified embodiment of FIG. **9** in which the input/output buffer **32_6** further includes a load adjusting unit **32_9**.

FIGS. **9** and **10** include identical components to those described in FIG. **3** and FIGS. **5**A and **5**B, which are also indicated by identical reference numerals, and thus such components will not be described repetitively.

FIG. **11** is a cross-sectional view illustrating a structure of a stacked memory device **110** according to another embodiment of the inventive concept.

Referring to FIG. **11**, the stacked memory device **110** includes a master chip **112** and slave chips **113***a* through **113***c*. The master chip **112** includes on a first surface FA thereof a first input/output circuit (not shown) for interfacing with outside a memory device and a first memory core (not shown). The slave chips **113***a* through **113***c* are electrically interconnected through first TSVs **118**, and are electrically connected to the master chip **112** through the first TSVs **118**. The master chip **112** and the slave chips **113***a* through **113***c* transmit and receive data and control signals such as command/address signals through the first TSVs **118**. The stacked memory device **110** may further include a substrate **111** electrically connected to the master chip **112**. The stacked memory device **110** may further include first internal electrodes **117**, second TSVs **116**, second internal electrodes **115**, and external terminals **114**.

The first internal electrodes **117** are disposed in the first surface FA of the master chip **112**. The second TSVs **116** electrically interconnect the first surface FA of the master chip **112** with a second surface FB of the master chip **112**. The second internal electrodes **115** are disposed on the second surface FB of the master chip **112**, and are electrically connected to the first internal electrodes **117**, respectively. The external terminals **114** electrically connect the second internal electrodes **115** with the substrate **111**.

In the stacked memory device **110** structured as shown in FIG. **11**, the slave chips **113***a* through **113***c* positioned at an upper portion have memory cores including memory cell arrays and input/output buffers, whereas the master chip **112** positioned at a lower portion further includes a circuit for interfacing with an external device, a control circuit, and a peripheral circuit as well as the memory core.

FIGS. **12**A through **14** are a simplified perspective view of the stacked memory device **110** of FIG. **11** and diagrams illustrating various modifications of the stacked memory device **110**. Hereinafter, various application examples according to the inventive concept will be described with reference to FIGS. **12**A through **14**.

Although TSVs **118***a* through **118***c* each are arranged in a line in examples shown in FIGS. **12**A through **14**, the stacked memory device **110** may have the TSVs **118***a* through **118***c* which are arranged in two lines as illustrated in FIG. **11** or more lines.

In addition, in the examples shown in FIGS. **12**A through **14**, offset signaling is applied to a data input/output path for data transmission through a TSV, but offset signaling may also be applied to a path of other signals, such as commands or addresses.

Referring to FIG. **12**A, the stacked memory device **110** includes the master chip **112** and the slave chips **113***a* through **113***c* which are electrically connected by the TSVs **118***a* through **118***c*.

On the assumption that the slave chips **113***a* through **113***c* are DRAM chips, each of the slave chips **113***a* through **113***c* includes a memory cell array including a plurality of memory blocks (not shown) each including a plurality of memory cells (not shown) having various structures of a single capacitor and a single transistor or a single transistor and disposed in various ways with word lines, bit lines, and sense amplifiers (not shown); a column decoder adjacent to a respective memory block; a row decoder adjacent to a respective memory block; a write driver **113_4**; an input/output sense amplifier **113_5**; and an input/output buffer **113_6**.

The input/output buffer **113_6** includes an input buffer **113_6***b* and an output buffer **113_6***a*. The output buffer **113_6***a* has to transmit a data signal through a TSV **118**, and to this end, the output buffer **113_6***a* includes an offset circuit **119** for offset signaling, such that a signal transmitted through the TSV **118** fully swings from "Voffset" that is higher than "0V" to the CMOS level of the power voltage VddQ.

An input/output buffer **112_5** positioned on the master chip **112** for data input includes an output buffer **112_5***a* and an input buffer **112_5***b*. Since the output buffer **112_5***a* has to transmit a data signal to the slave chips **113***a* through **113***c* through the TSV **118**, the offset circuit **119** is further included for offset signaling, such that a signal transmitted through the TSV **118** fully swings from "Voffset" that is higher than "0V" to the CMOS level of the power voltage VddQ.

For a data signal output from or input to the memory core of the master chip **112**, the master chip **112** may also include a write driver **112_10**, an input/output sense amplifier **112_11**, and an input/output buffer **112_8**.

The input/output buffer **112_8** includes an input buffer **112_8***b* and an output buffer **112_8***a*. The input buffer **112_8***b* and the output buffer **112_8***a* do not transmit a data signal through the TSV **118**, and thus they do not need to include the offset circuit **119** for offset signaling. Therefore, a data signal output from the input buffer **112_8***b* or the output buffer **112_8***a* fully swings from "0V" to the CMOS level of the power voltage VddQ. The input/output buffers **112_5** and **112_8** are connected to a pad **112_6**.

In the example shown in FIG. **12**A, the master chip **112** is structured such that the input/output buffer **112_8** for data input to or data output from the memory core of the master chip **112** and the input/output buffer **112_5** for data input to or data output from the slave chips **113***a* through **113***c* are separated from each other, and thus may have structures different from each other. For example, the input/output buffer **112_5** for data input to or data output from the slave chips **113***a* through **113***c* may include the offset circuit **119** for offset signaling through the TSV **118**, whereas the input/output buffer **112_8** for data input to or data output from the memory core of the master chip **112** may not include the offset circuit **119**.

Although identical slave chips **113***a* through **113***c* are stacked herein, a plurality of different memories or different

kinds of chips may be stacked and may be connected by TSVs and other connection means, e.g., wire bonding.

The master chip **112** may be disposed as the lowermost layer, as illustrated, between layers, or the uppermost layer. Although the master chip **112** is included in the stacked memory device **110** in FIG. **12**A, the master chip **112** may also be implemented with a package separated from the stacked memory device **110**.

In FIG. **12**B, to improve signal integrity, the master chip **112** and the slave chips **113***a* through **113***c* further include loading adjusting units **112_7**, **112_9**, and **113_7** connected to the input/output buffers **113_6**, **112_5**, and **112_8**, respectively, in addition to components shown in FIG. **12**A. Although the loading adjusting units **112_7**, **112_9**, and **113_7** are implemented as ODTs disposed in the master chip **112** in FIG. **13**, they may also be implemented in other forms. The stacked memory device **110** shown in FIG. **13** has the same components as those of the stacked memory device **110** illustrated in FIG. **12** except for the loading adjusting units **112_7**, **112_9**, and **113_7**, and thus such components and operations thereof will not be described in detail.

Unlike in FIGS. **12**A and **12**B, in FIG. **13**, an input/output buffer for data input to or output from the slave chips **113***a* through **113***c* may be shared with an input/output buffer for data input to or data output from the memory core of the master chip **112**.

Also in FIG. **13**, the same components as those shown in FIGS. **12**A and **12**B will be indicated by the same reference numerals and will not be described in detail.

As the input/output buffer **112_5** for data input to or data output from the memory cores of the slave chips **113***a* through **113***c* and for data input to or output from the memory core of the master chip **112** is shared, the input/output buffer **112_5** needs the offset circuit **119** for offset signaling through the TSV **118** and thus the shared input/output buffer **112_5** has the offset circuit **119** for offset signaling through the TSV **118**.

Offset signaling of the shared input/output buffer **112_5** may be on/off controlled according to a layer to or from which data is input or output. For example, when data is transmitted to the memory core of the master chip **112**, the offset circuit **119** of the output buffer **112_5***a* is turned off such that data can fully swing from the ground voltage VssQ to the power voltage VddQ. On the other hand, to transmit data to the memory cores of the slave chips **113***a* through **113***c*, the data has to be transmitted through the TSV **118** and thus the offset circuit **119** of the output buffer **112_5***a* is turned on, such that the data can fully swing from the offset voltage Voffset that is higher than the ground voltage VssQ to the power voltage VddQ.

The input/output buffer **112_5** may also perform offset signaling at all times, regardless of on-off control of the offset circuit **119**.

In FIGS. **12**A through **13**, different input/output buffers are used for data input to or output from the memory core of the master chip **112** and data input to or output from the memory cores of the slave chips **113***a* through **113***c*, and data is transmitted or received using a shared input/output buffer. In addition, features regarding a load adjusting unit which is connected to each input/output buffer are described in FIGS. **12**A through **13**. Although not shown in FIGS. **12**A through **13**, an embodiment is also possible where the load adjusting unit **112_7** is not connected to the shared input/output buffer **112_5** shown in FIG. **13**.

With reference to FIGS. **12**A through **13**, the characteristics of signal transmission through the TSV **118** in the memory device **110** have been described. In particular, signal transmission through the TSV **118** between the master chip **112** and the slave chips **113***a* through **113***c* has been described with reference to FIGS. **12**A through **13**, but the master chip **112** can also transmit a signal to an external device through a TSV (**116** of FIG. **14**). Therefore, with reference to FIG. **14**, a description will be made of an embodiment where offset signaling is applied to signal transmission to the external device.

When a logic circuit **112_12** is disposed on the first surface FA of the master chip **112** and a pad for interfacing with an external device is disposed on the second surface FB, an output signal from the master chip **112** to the external device is provided to the external device through the TSV **116** and the pad of the second surface FB. Among components shown in FIG. **14**, the input/output buffer **112_8** is a buffer for transmitting a signal to or receiving a signal from the master chip **112** and the logic circuit **112_12** and an internal device **112_13** transmit a signal to and receive a signal from the external device through the input/output buffer **112_8** and the TSV **116**. When a memory core is disposed in the master chip **112**, as in FIGS. **12**A through **13**, the logic circuit **112_12** may be a peripheral circuit including an input/output sense amplifier and a write driver and the internal device **112_13** may be the memory core. The operation of the input/output buffer **112_5** for signal transmission to or reception from the slave chips **113***a* through **113***c* has already been described and thus will not be described in detail.

The input/output buffer **112_8** for signal transmission to or reception from the internal device **112_13** of the master chip **112** receives an input signal through the TSV **116** and transmits the signal to the logic circuit **112_12** and the internal device **112_13**. An output signal generated from the internal device **112_13** is transmitted to the external device through the logic circuit **112_12**, the input/output buffer **112_8**, and then the TSV **116**. Since the input/output buffer **112_8** generates an output signal transmitted through the TSV **116**, offset signaling is applied to the input/output buffer **112_8**. By applying offset signaling to the output buffer **112_8***a* which transmits the output signal through the TSV **116**, a first logic level (low level) of the signal transmitted through the TSV **116** goes to the offset voltage Voffset.

As described above, in transmission of signals such as data, addresses, commands, etc. through a TSV, that is, in signaling, an offset of a predetermined level is provided.

An offset may be previously set at a release stage of a product in units of a chip or package, or may be set by a user, and may be reset during use of the product.

Hereinafter, a process of setting or calibrating an offset will be described.

FIG. **15** is a flowchart schematically illustrating an offset calibration process for offset signaling, according to an embodiment of the inventive concept.

Offset circuits are disposed in a chip as many as the same number as or a number proportional to the number of input/output buffers, and some characteristic variation may occur in manufacturing processes. Thus, different offsets for different input/output buffers for the same signal may distort the signal.

To this end, calibration for setting an offset for each input/output buffer to be in a predetermined range is required. Calibration may be performed in an on time program (OTP) manner using a laser fuse or an electric fuse at a test stage prior to product release, or may be performed using mode register set (MRS) according to a user's environment during initialization including power-up or during use.

During use, various schemes may be applied such that calibration may be performed during wake-up after power

down or deep power down or may be periodically performed using a counter, or an offset may be detected frequently and calibrated.

The offset calibration process shown in FIG. **15** is applicable to any calibration process during a test prior to product release or during the user's initialization, as will be described in detail below.

Although the following description will be made using an example where in a semiconductor memory device, which is three-dimensionally stacked with a TSV, data of a memory core stacked as an upper layer is transmitted to a chip stacked as a lower layer according to a read command, offset calibration is not limited to this example.

Referring to FIG. **15**, upon generation of a data read command from a memory controller in operation S**150**, data of a memory cell positioned at an address is output from the memory core, for example, through addressing processes.

Cell data passing through a bit line, a bit line sense amplifier, a local input/output line, a global input/output line, and so forth is transmitted to an input/output buffer (more specifically, an output buffer) through an input/output sense amplifier. The output buffer includes an offset circuit which has the offset voltage Voffset that is higher than the ground voltage VssQ. The offset circuit is configured using a diode or a resistor and can be controlled by a switch connected in parallel thereto.

Since each output buffer has an initially set offset voltage, the offset voltage is detected from each input/output buffer in operation S**151**. Upon generation of an initial data read command, addressing is performed such that an offset voltage can be read sequentially from a plurality of output buffers disposed to correspond to memory cores. For example, the offset voltages of the plurality of output buffers may be sequentially read by the read command. Also, the offset voltages may be read according to a command for sequentially outputting data from output buffers of all memory cores like as a self-refresh process in which addressing is sequentially performed on all cells.

Until offset detection for calibration is performed on all target output buffers, this process is repeated in operation S**152**. In operation S**153**, it is determined whether an offset voltage is within a normal range in each output buffer. If so, calibration is finished. Otherwise, if the offset voltage is not within the normal range, the offset voltage is calibrated using a switching operation in operation S**154** and then the foregoing process is repeated.

FIG. **16** is a diagram schematically illustrating an example of a semiconductor device for the offset calibration process illustrated in FIG. **15**.

Referring to FIG. **16**, the semiconductor device includes a plurality of input/output buffers **160**, each having an offset circuit **163**, a detector **161** for detecting an offset voltage of each input/output buffer **160**, and a calibrator **162** for calibrating an offset voltage according to the detection result. In FIG. **16**, for convenience' sake, the offset circuit **163** is included in a single input/output buffer **160** and the detector **161** and the calibrator **162** correspond to the offset circuit **163**.

The detector **161** and the calibrator **162** may be provided for each input/output buffer **160**, or they may be shared among the plurality of input/output buffers **160**.

The detector **161** and the calibrator **162** may be disposed in each layer including memory cores, or all detectors **161** and calibrators **162** may be disposed in a single chip such as an interface chip.

As shown in FIG. **16**, the offset circuit **163** may include a combination **163***a* of diodes and switches, a combination **163***b* of resistors and switches, or a combination **163***c* of diodes, switches, and resistors. By controlling on/off of switches according to an output of the calibrator **162**, the offset voltage can be controlled.

FIG. **17** is a diagram showing an example of the detector **161** shown in FIG. **16**.

Referring to **17**A, the detector **161** includes a comparator **161_1** and a counter **161_2**. The comparator **161_1** compares an offset voltage of the offset circuit **163** included in the input/output buffer **160** with a reference voltage Ref. The counter **161_2** counts and outputs a comparison result of the comparator **161_1**. The counter **161_2** may have various structures. Referring to **17**B shows a representative example of the counter **161_2**, a ripple counter, and Referring to **17**C shows an operating waveform thereof.

An asynchronous ripple counter has a d-flipflop structure which uses its inverted output /Q as a data input D, and by connecting asynchronous ripple counters in three stages, as shown in FIG. **17**B, three-bit data can be stored. The detailed operation of the ripple counter will not be described.

The counter **161_2** may also be implemented in other forms, such as a ring counter, a Johnson counter, a decade counter, an up-down counter, etc., as well as a ripple counter.

As mentioned previously, in the inventive concept, offset signaling is applied to optimize signal transmission through a TSV by minimizing an influence of a MOS capacitance due to the TSV.

Since the MOS capacitance may have a large influence upon high-speed signaling, offset signaling is applied to a TSV transmission line for high-speed signaling and signaling for full-swing from a ground voltage to a power voltage may be applied to low-speed signaling.

For high-speed transmission, a TSV to which offset signaling is applied may be used; however, for low-speed transmission, wire bonding may be used.

FIG. **18** shows cross-sectional views of examples of semiconductor devices to which a high-speed TSV and a low-speed TSV are applied.

FIG. **18**A shows an example where a central processing unit (CPU) **182** and a multi-channel DRAM **184** are stacked, and FIG. **18**A shows an example where the CPU **182**, the multi-channel DRAM **184**, and a plurality of storage memories **185** are stacked. Since FIG. **18**A includes components shown in FIG. **18**A, a description of components shown in FIG. **18**A may apply to a description of the components shown in FIG. **18**A.

Referring to FIG. **18**B, external connection terminals **180** for electric connection to an external device are disposed under a substrate **181**, and the CPU **182** is disposed on the substrate **181**. Upper and lower portions of the CPU **182** are connected through TSVs **183***a* and **183***b* under which connection terminals **188** are disposed. The multi-channel DRAM **184** is disposed on the CPU **182**, and the plurality of storage memories **185** are stacked on the multi-channel DRAM **184** with an insulator **186** between the plurality of storage memories **185** and the multi-channel DRAM **184**. The plurality of storage memories **185** are electrically connected with the CPU **182** through wire bonding **187**. An entire surface including the plurality of storage memories **185** is covered with a molding material **189**.

The CPU **182** may provide various signals such as a voltage signal, a control signal, and data to the multi-channel DRAM **184** and the plurality of memories **185** or provide the signals to an external device through the substrate **181**. Such various signals include a signal transmitted in the form of a high frequency (high-speed signal) and a signal transmitted in the form of a low frequency (low-speed signal). As previously illustrated, data may be transmitted as a high-speed signal and

a signal such as a command or address or a voltage signal may be transmitted as a low-speed signal. The TSVs **183***a* and **183***b* included in the CPU **182** include the TSV **183***a* for high-speed transmission and the TSV **183***b* for low-speed transmission. The high-speed transmission TSV **183***a* transmits a signal to which foregoing offset signaling is applied, and the low-speed transmission TSV **183***b* transmits a signal to which offset signaling is not applied (for example, a signal having full swing between a ground voltage and a power voltage). While the memories **185** are illustrated to transmit a signal to and receive a signal from the CPU **182** through the wire bonding **187** in FIG. **18**B, some signal may be transmitted and received through a TSV (**183***a*, **183***b*) included in the CPU **182** and a TSV (not shown) disposed in the multi-channel DRAM **184**. In this case, a high-speed signal transmitted to the plurality of memories **185** may be transmitted through the wire bonding **187**, and a high-speed signal may be transmitted to the plurality of memories **185** through TSVs disposed in the CPU **182** and the multi-channel DRAM **184**. In addition, when the low-speed transmission TSV **183***b* and the high-speed transmission TSV **183***a* are used in common by the multi-channel DRAM **184** and the plurality of memories **185**, the high-speed transmission TSV **183***a* may transmit a signal to the plurality of memories **185** by using offset signaling and the low-speed transmission TSV **183***b* may transmit a signal to the plurality of memories **185** without using offset signaling. To transmit a signal to the plurality of memories **185**, another additional TSV may be provided in the CPU **182** and a high-speed signal may be transmitted to the plurality of memories **185** through the additional TSV.

Although it is shown in FIG. **18**B that the plurality of memories **185** are connected to the CPU **182** through the wire bonding **187**, the embodiment of the inventive concept is not limited thereto. For example, the plurality of memories **185** may be directly connected to the substrate **181** through the wire bonding **187**. In this case, access to the plurality of memories **185** may be directly controlled from outside. Alternatively, the plurality of memories **185** may be connected to both the CPU **182** and the substrate **181** through the wire bonding **187**.

FIG. **19** is a diagram illustrating an example of a 3D semiconductor memory device **190** to which a high-speed TSV and a low-speed TSV are applied.

In FIG. **19**, the 3D semiconductor memory device **190** uses a TSV structure illustrated in FIGS. **3**, **6**, and **7**.

Referring to FIG. **19**, the 3D semiconductor device **190** having a TSV structure includes a DRAM chip (not shown) and an interface chip (not shown) which are stacked at upper and lower portions and are interconnected through TSVs **195_1** and **195_2**. The TSV **195_1** for data transmission transmits data between upper and lower chips, and the TSV **195_2** for address transmission transmits an address signal between the upper and lower chips. In the example shown in FIG. **19**, a signal transmitted through the data transmission TSV **195_1** is an offset signaling-applied signal and a signal transmitted through the address transmission TSV **195_2** is a signal to which offset signaling is not applied.

Although the DRAM chip and the interface chip are not illustrated in detail in FIG. **19**, an address buffer **198**, an address buffer controller **199**, and a input/output buffer **196** are provided in the interface chip and a memory cell array **191** and a input/output buffer **194** are provided in the DRAM chip.

The interface chip may include an address buffer for inputting and buffering an address from an external device, a command buffer for receiving and buffering a command from the external device and decoding the command, a input/output buffer for inputting or outputting data, a voltage generator for generating a necessary power voltage, and a peripheral circuit including logic for controlling overall operation of the interface chip.

More specifically, the upper DRAM chip includes a memory cell array including a plurality of memory blocks each including a plurality of memory cells having various structures of a single capacitor and a single transistor or a single transistor and disposed in various ways with word lines, bit lines, and sense amplifiers; a column decoder which inputs and decodes an address and outputs a column address for selecting a column line of a respective memory block; a row decoder which inputs and decodes an address and outputs a row address for selecting a row line of a respective memory block; a write driver **192**; an input/output sense amplifier **193**; and an input/output buffer **194**.

The input/output buffer **194** includes an input buffer **194**_*b* and an output buffer **194**_*a*. Since the output buffer **194**_*a* has to transmit a high-speed data signal through a TSV **195_1**, the output buffer **194**_*a* includes an offset circuit **200** for offset signaling such that the signal transmitted through the TSV **195_1** can fully swing from "Voffset" that is higher than "0V" to the CMOS level of the power voltage VddQ.

The input/output buffer **196** included in the interface chip includes an output buffer **196**_*a* and an input buffer **196**_*b*. Since the output buffer **196**_*a* has to transmit a high-speed data signal to the upper DRAM chip through the TSV **195_1**, the output buffer **196** includes the offset circuit **200** for offset signaling such that the signal transmitted through the TSV **195_1** can fully swing from "Voffset" that is higher than "0V" to the CMOS level of the power voltage VddQ.

The 3D semiconductor device **190** includes the address buffer **198** which receives and buffers the external address signal Ext.An to output the internal address signal Int.An. The 3D semiconductor device **190** also includes the address buffer controller (written as CONTROL) **199** for controlling transmission of an address signal through the address buffer **198**.

The address buffer **198** includes a CMOS inverter including an NMOS transistor **198_1** and a PMOS transistor **198_2**, and a PMOS transistor **198_3** which is connected between the CMOS inverter and the power voltage Vdd and has a gate controlled by an output of the address buffer controller **199**.

The detailed operations of the address buffer controller **199** and the address buffer **198** have already been described with reference to FIGS. **3** through **7** and thus will not be described in detail at this point.

As illustrated in FIG. **19**, in the case of a semiconductor memory device, data requires a relatively high-speed operation, and thus for data transmission through a TSV, the data is transmitted through the high-speed transmission TSV **195_1** by applying offset signaling; whereas an address or a command requires a relatively low-speed operation, and thus for transmission of an address or a command through a TSV, the address or command to which offset signaling is not applied (e.g., a signal which fully swings from the ground voltage to the power voltage) is transmitted through the low-speed transmission TSV **195_2**.

FIGS. **20** and **21** show modifications of the example of the semiconductor device **190** illustrated in FIG. **18**. In the semiconductor device illustrated in FIG. **20**, the same components as those illustrated in FIG. **18**B will be indicated by the same reference numerals as used in FIG. **18**B and a detailed description thereof will not be provided.

In FIG. **18**B, the TSV **183** includes the high-speed transmission TSV **183***a* and the low-speed transmission TSV **183***b* such that offset signaling is applied only to the high-speed transmission TSV **183***a*. However, in FIG. **20**, offset signaling is applied to any TSV **183** for the same high-speed operation,

but typical CMOS full-swing signaling through the wire bonding **187** is applied to low-speed signaling between the storage memory **185** and the CPU **182**.

In FIG. **21**, storage memories **185***a* and **186***b* are stacked as a storage memory **185** shown in FIG. **20**, and insulators **186***a* and **186***b* are respectively disposed between the multi-channel DRAM **184** and the storage memory **185**_*a* and between the storage memory **185***a* and the storage memory **185***b*. The stacked memories **185***a* and **185***b* are connected with the CPU **182** through wire bonding **187***a* and wire bonding **187***b*, respectively.

For the same high-speed operation for any TSV **183**, offset signaling is applied. For low-speed signaling between the storage memories **185***a* and **185***b* and the CPU **182**, typical CMOS full-swing signaling through the wire bonding **187***a* and **187***b* is applied.

As described in FIG. **18**B, the memory **185** may be directly connected to the substrate **181** through the wire boding **187** or the memory **185** may also be connected to both the CPU **182** and the substrate **181** through the wire bonding **187**.

FIG. **22**A is a circuit diagram showing an example where offset signaling having different characteristics is applied to different chips in a semiconductor device **210** including a plurality of chips **211**, **212**, and **213**. As illustrated in FIG. **22**A, the semiconductor device **210** includes a master chip **211** which controls driving of a memory and includes a logic circuit for interfacing with an external device and one or more slave chips **212** and **213**, each of which includes a plurality of memory blocks. To describe an input/output buffer for signal transmission through a TSV and offset signaling, only related components are shown in FIG. **22**A. In FIG. **22**A, the semiconductor device **210** includes a plurality of chips to describe offset signaling through a TSV. However, a single semiconductor chip may include a plurality of layers which include a master region and slave regions, and a related illustration will not be provided.

The semiconductor device **210** in which a plurality of chips are stacked may include a memory including a plurality of banks or a plurality of ranks. Each memory bank or rank may be controlled in association with a write/read operation with respect to the memory, and a TSV for data transmission may be separately disposed for each chip to prevent data collision between different slave chips during data transmission. For example, a first slave chip **212** may bi-directionally exchange data DQ**1** with the master chip **211** through a first TSV TSV_**1**, and a second slave chip **213** may bi-directionally exchange data DQ**2** with the master chip **211** through a second TSV TSV_**2**. A command or an address may be transmitted from the master chip **211** to the first and second slave chips **212** and **213** through the same TSV (for example, a third TSV TSV_**3**).

For data transmission, offset signaling is applied to input/output buffers **211***a* and **211***b* included in the master chip **211**. Thus, the input/output buffers **211***a* and **211***b* transmit offset signaling-applied data to the first slave chip **212** and the second slave chip **213** through the first TSV TSV_**1** and the second TSV TSV_**2**, respectively. Likewise, an input/output buffer **212**_*a* provided in the first slave chip **212** transmits offset signaling-applied read data to the master chip **211** through the first TSV TSV_**1**, and an input/output buffer **213**_*b* provided in the second slave chip **213** transmits offset signaling-applied read data to the master chip **211** through the second TSV TSV_**2**. A command/address may be transmitted to the first slave chip **212** and the second slave chip **213** through the third TSV TSV_**3** connected in common, and on the assumption that the command/address requires low-speed transmission, offset signaling is not applied to input/output buffers **211***c*, **212***c*, and **213***c* for transmitting the command/address.

As such, when separate TSVs are provided for different chips, the first TSV TSV_**1** for transmitting data to the first slave chip **212** and the second TSV TSV_**2** for transmitting data to the second slave chip **213** may have different physical length (or distance). According to the physical length, a capacitance generated by nature of a TSV may change. In this case, to reduce a variation in signal characteristics between TSVs, different levels of an offset voltage corresponding to offset signaling may be applied to different chips. For example, offset voltages may be set to be different for the input/output buffers **211***a* and **212***a* for transmitting a signal through the first TSV TSV_**1** and the input/output buffers **211***b* and **213***b* for transmitting a signal through the second TSV TSV_**2**. Adjustment of a level of an offset voltage for each input/output buffer can be easily achieved by referring to the embodiment shown in FIGS. **16** and **17**.

FIG. **22**B shows an example where during data transmission for a plurality of chips, a transmission path for write data WD and a transmission path for read data RD are separated for control in units of a memory bank or rank. Thus, a TSV for transmitting the write data WD and a TSV for transmitting the read data RD are formed to be separated from each other.

The master chip **221** receives the write data WD from an external device or provides the read data RD to the external device through different pads. The input/output buffer **221**_*a* of the master chip **221** transmits the write data WD to the slave chip **222** through a TSV by applying offset signaling. The input/output buffer **222**_*a* included in the slave chip **222** transmits the read data RD to the master chip **221** through a TSV by applying offset signaling.

When a memory device **220** is implemented as shown in FIG. **22**B, a chip (for example, the master chip **221**) includes a plurality of buffers, some of which are connected to a write data TSV and the others of which are connected to a read data TSV. The plurality of buffers may also be divided into buffers to which offset signaling is applied and buffers to which offset signaling is not applied, according to their connected TSVs. For example, the master chip **221** includes buffers which transmit a signal through the write data TSV and to which offset signaling is applied and buffers which transmit a signal through the read data TSV and to which offset signaling is not applied.

FIG. **23** is a block diagram of an application example according to the inventive concept, which is connected to a memory controller. In FIG. **23**, various forms of memory bus protocols are shown.

Referring to FIG. **23**A, a bus protocol between a memory controller and a memory, e.g., DRAMs is disclosed and a control signal C/S such as /CS, CKE, /RAS, /CAS, or /WE and an address signal ADDR are provided from the memory controller to the memory. Data DQ is transmitted bi-directionally.

Herein, offset signaling through a TSV may be applied only to the data DQ or signaling through a TSV may be applied to any signal.

Referring to FIG. **23**B, packetized control signals and address signals (C/A packet) are provided from the memory controller to the memory and the data DQ is transmitted bi-directionally.

Referring FIG. **23**C, packetized control signals, address signals, and write signals (C/A/WD packet) are provided from the memory controller to the memory and a data output Q is transmitted unidirectionally from the memory to the memory controller.

Referring to FIG. **23**D, control signals (C/S) are provided from the memory controller to the memory, e.g., a flash SRAM and commands, addresses, and data (C/A/DQ) are transmitted bi-directionally.

FIG. **24** is a block diagram showing an application example of an electronic system **230** including a 3D stacked structure semiconductor memory device having a TSV.

Referring to FIG. **24**, the electronic system **230** includes an input device **233**, an output device **234**, a memory device **232**, and a processor device **231**.

The memory device **232** includes an interface chip and/or a memory controller, and a 3D stacked structure memory **235** having a TSV. The interface and/or memory controller may form a 3D stacked structure with the memory **235**.

The processor device **231** is connected to the input device **233**, the output device **234**, and the memory device **232** through corresponding interfaces to control overall operation of the electronic system **230**.

FIG. **25** is a block diagram showing an application example of a single-chip micro computer including a 3D stacked structure semiconductor memory device.

Referring to FIG. **25**, the micro computer in the form of a circuit module includes a CPU **240**, a 3D stacked memory having a TSV structure, e.g., a RAM **249** used as a work area of the CPU **240**, a bus controller **248**, an oscillator **243**, a frequency divider **244**, a flash memory **245**, a power circuit **246**, an input/output port **247**, and other peripheral circuits **242** including a timer counter and so forth. Components included in the micro computer are connected to an internal bus **241**.

The CPU **240** includes a command control part (not shown) and an execution part (not shown), and decodes a fetched command through the command control part and performs a processing operation through the execution part according to the decoding result.

The flash memory **245** stores not only an operation program or data of the CPU **240** but also data of various types. The power circuit **246** generates a high voltage required for erase and write operations of the flash memory **245**.

The frequency divider **244** divides a source frequency provided from the oscillator **243** into a plurality of frequencies to provide reference clock signals and other internal clock signals.

The internal bus **241** includes an address bus, a data bus, and a control bus.

Herein, the RAM **249** has a TSV structure, such that various signals such as data or an address are transmitted through a TSV and the memory device may be stacked with the memory controller or with other peripheral devices. In this case, for signaling through the TSV, offset signaling may be applied only to high-speed signals such as data or may be applied to any signal line through the TSV.

The bus controller **248** controls bus accesses to a predetermined cycle number in response to an access request from the CPU **240**. Herein, the access cycle number is related to a wait state and a width of a bus corresponding to an accessed address.

When the micro computer is mounted on the system, the CPU **240** controls the erase and write operations with respect to the flash memory **245**. In a device test or manufacturing stage, the erase and write operations with respect to the flash memory **245** can be directly controlled by an external recording device through the input/output port **247**.

FIGS. **26**A and **26**B show application examples of a memory card to which a non-volatile 3D stacked semiconductor memory device having a TSV according to the inventive concept is applied.

Referring to FIGS. **26**A and **26**B, a memory card includes an interface part **251**, a controller **252***a* or **252***b* which includes a buffer memory **254***a* or **254***b* and controls an operation of the memory card, and at least one non-volatile memory **253** having a 3D stacked structure with a TSV.

As discussed above, offset signaling is applied to the non-volatile memory **253** through the TSV. In this case, offset signaling may be applied only for data or may be applied also for an address or a command as well as for data.

The controller **252***a* or **252***b* is connected to the interface part **251** through a data bus DATA and an address bus ADDRESS, and is connected with the non-volatile memory **253** through the data bus DATA and the address bus ADDRESS.

In FIG. **26**B, the memory card includes an address translation table **255** for translating a logical address input from an external device into a physical address of the non-volatile memory **253**, in the controller **252***b*, more specifically, in the buffer memory **254***b* of the controller **252***b*.

For example, in the write operation, new data is written to an arbitrary physical address. The memory card having the address translation table **255** may provide a physical address for selecting a memory array capable of performing the write operation.

As described above, an influence of a MOS capacitance of a TSV in a semiconductor device having a 3D stacked structure with a TSV can be alleviated by offset signaling.

The description of the embodiments of the inventive concept has been provided with reference to the drawings for thorough understanding of the inventive concept, and thus should not be construed to be intended to limit the inventive concept. It is also apparent to those of ordinary skill in the art that various changes and modifications can be made without departing from the basic principle of the inventive concept.

What is claimed is:

1. A three-dimensional (3D) semiconductor device comprising:

a plurality of stacked layers; and

a through-silicon via (TSV) electrically connecting the plurality of layers,

wherein in signal transmission among the plurality of layers, the TSV transmits a signal that swings in a range from an offset voltage that is higher than a ground voltage to a power voltage;

wherein each of the plurality of layers comprises an input/output buffer connected to the TSV, and the input/output buffer comprises a driver circuit which outputs a signal transmitted through the TSV and an offset circuit which causes an output signal of the driver circuit to have a level of the offset voltage.

2. The 3D semiconductor device of claim **1**, wherein the TSV comprises a first conductive material and an insulator is disposed between the first conductive material and a second conductive material of each layer, and

the first conductive material, the insulator, and the second conductive material form a capacitor.

3. The 3D semiconductor device of claim **2**, wherein the capacitor operates in a region where a capacitance of the capacitor decreases as a voltage increases.

4. The 3D semiconductor device of claim **2**, wherein the first conductive material comprises metal, the second conductive material comprises semiconductor, and the capacitor is a metal-oxide-semiconductor (MOS) capacitor.

5. The 3D semiconductor device of claim **1**, wherein the offset circuit is connected between the ground voltage and the driver circuit and comprises a diode or a resistor.

6. A three-dimensional (3D) semiconductor device comprising:

a plurality of stacked layers; and

a through-silicon via (TSV) electrically connecting the plurality of layers,

wherein the TSV comprises a first conductive material, an insulator is disposed between the first conductive material and a second conductive material of each layer, and the first conductive material, the insulator, and the second conductive material form a capacitor, and

first and second logics of a signal transmitted through the TSV are higher than a level of the ground voltage;

wherein each of the plurality of layers comprises an input/output buffer connected to the TSV, and

the input/output buffer comprises a driver circuit which outputs a signal transmitted through the TSV and an offset circuit which causes an output signal of the driver circuit to have a level of the offset voltage.

7. The 3D semiconductor device of claim 6, wherein in signal transmission among the plurality of layers, the TSV transmits a signal that swings in a range from the offset voltage that is higher than the ground voltage to the ground voltage.

8. The 3D semiconductor device of claim 6, wherein the capacitor operates in a region where a capacitance of the capacitor decreases as a voltage increases.

9. The 3D semiconductor device of claim 6, wherein the offset circuit is connected between the ground voltage and the driver circuit and comprises a diode or a resistor.

10. The 3D semiconductor device of claim 6, wherein the first conductive material comprises metal, the second conductive material comprises semiconductor, and the capacitor is a metal-oxide-semiconductor (MOS) capacitor.

11. A three-dimensional (3D) semiconductor device comprising:

a first layer comprising at least one memory cell and input/output buffer;

a second layer comprising an interface circuit for interfacing with the memory cell and an external device and controlling the memory cell, the second layer being stacked with the first layer;

at least one through-silicon via (TSV) electrically connecting the first layer and the second layer by passing through at least a portion of the first layer,

wherein in signal transmission between the first layer and the second layer, the TSV transmits a signal that swings in a range from an offset voltage that is higher than a ground voltage to a power voltage;

wherein each input/output buffer comprises a driver circuit which outputs a signal transmitted through the TSV and an offset circuit which causes an output signal of the driver circuit to have a level of the offset voltage.

12. The 3D semiconductor device of claim 11, wherein the TSV comprises a first conductive material, an insulator is disposed between the first conductive material and a second conductive material of the first layer, and the first conductive material, the insulator, and the second conductive material form a capacitor.

13. The 3D semiconductor device of claim 12, wherein the capacitor operates in a region where a capacitance of the capacitor decreases as a voltage increases.

14. The 3D semiconductor device of claim 11, wherein the offset circuit is connected between the ground voltage and the driver circuit and comprises a diode or a resistor.

15. The 3D semiconductor device of claim 11, wherein a signal transmitted through the TSV comprises at least one selected from a data signal, an address signal, and a command signal.

16. A three-dimensional (3D) semiconductor device comprising:

a first layer comprising at least one memory cell and input/output buffer;

a second layer comprising an interface circuit for interfacing with the memory cell and an external device and controlling the memory cell, the second layer being stacked with the first layer;

first and second through-silicon via (TSV) electrically connecting the first layer and the second layer by passing through at least a portion of the first layer,

wherein in signal transmission between the first layer and the second layer, the first TSV transmits a signal that swings in a range from an offset voltage that is higher than a ground voltage to a power voltage, and

in signal transmission between the first layer and the second layer, the second TSV transmits a signal that swings in a range from the ground voltage to the power voltage;

wherein each input/output buffer comprises a driver circuit which outputs a signal transmitted through the TSV and an offset circuit which causes an output signal of the driver circuit to have a level of the offset voltage.

17. The 3D semiconductor device of claim 16, wherein the signal transmitted through the first TSV is a higher-speed signal than the signal transmitted through the second TSV.

18. The 3D semiconductor device of claim 17, wherein the signal transmitted through the first TSV comprises a data signal, and the signal transmitted through the second TSV comprises an address or command signal.

* * * * *