US008787060B2

(12) **United States Patent**
Lee

(10) **Patent No.: US 8,787,060 B2**
(45) **Date of Patent: Jul. 22, 2014**

(54) **METHOD AND APPARATUS FOR OPTIMIZING DRIVER LOAD IN A MEMORY PACKAGE**

(75) Inventor: **Hyun Lee**, Ladera Ranch, CA (US)

(73) Assignee: **Netlist, Inc.**, Irvine, CA (US)

(*) Notice: Subject to any disclaimer, the term of this patent is extended or adjusted under 35 U.S.C. 154(b) by 103 days.

(21) Appl. No.: **13/288,850**

(22) Filed: **Nov. 3, 2011**

(65) **Prior Publication Data**

US 2012/0106228 A1 May 3, 2012

Related U.S. Application Data

(60) Provisional application No. 61/409,893, filed on Nov. 3, 2010.

(51) **Int. Cl.**
G11C 5/06 (2006.01)

(52) **U.S. Cl.**
USPC **365/63**; 365/51

(58) **Field of Classification Search**
USPC 365/63, 51, 52
See application file for complete search history.

(56) **References Cited**

U.S. PATENT DOCUMENTS

6,243,283	B1	6/2001	Bertin et al.
6,551,857	B2	4/2003	Leedy
7,098,541	B2	8/2006	Adelmann
7,200,021	B2	4/2007	Raghuram
7,254,036	B2	8/2007	Pauley et al.
7,269,042	B2	9/2007	Kinsley et al.
7,286,436	B2	10/2007	Bhakta et al.
7,289,386	B2	10/2007	Bhakta et al.
7,375,970	B2	5/2008	Pauley et al.
7,442,050	B1	10/2008	Bhakta et al.
7,532,537	B2	5/2009	Solomon et al.
7,619,893	B1	11/2009	Yu
7,619,912	B2	11/2009	Bhakta et al.
7,630,202	B2	12/2009	Pauley et al.

(Continued)

FOREIGN PATENT DOCUMENTS

EP	1 816 570 A2	8/2007
WO	WO 2010-138480	12/2010
WO	WO 2011-049710	4/2011
WO	WO 2011-094437	8/2011

OTHER PUBLICATIONS

International Search Report and Written Opinion, PCT/US2011/059209, Jan. 31, 2013.

(Continued)

Primary Examiner — Huan Hoang
(74) *Attorney, Agent, or Firm* — Jamie J. Zheng, Esq.

(57) **ABSTRACT**

An apparatus is provided that includes a plurality of array dies and at least two die interconnects. The first die interconnect is in electrical communication with a data port of a first array die and a data port of a second array die and not in electrical communication with data ports of a third array die. The second die interconnect is in electrical communication with a data port of the third array die and not in electrical communication with data ports of the first array die and the second array die. The apparatus includes a control die that includes a first data conduit configured to transmit a data signal to the first die interconnect and not to the second die interconnect, and at least a second data conduit configured to transmit the data signal to the second die interconnect and not to the first die interconnect.

34 Claims, 8 Drawing Sheets

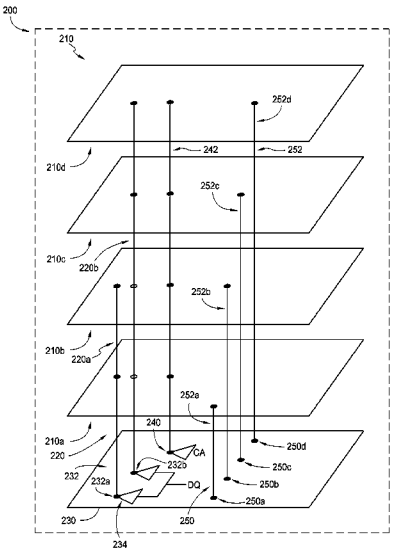

(56) **References Cited**

U.S. PATENT DOCUMENTS

7,633,165	B2	12/2009	Hsu et al.	
7,636,274	B2	12/2009	Solomon et al.	
7,683,459	B2	3/2010	Ma et al.	
7,811,097	B1	10/2010	Bhakta et al.	
7,827,348	B2	11/2010	Lee et al.	
7,830,692	B2	11/2010	Chung et al.	
7,839,645	B2	11/2010	Pauley et al.	
7,864,627	B2	1/2011	Bhakta et al.	
7,881,150	B2	2/2011	Solomon et al.	
7,894,229	B2	2/2011	Lahtinen et al.	
7,894,230	B2	2/2011	Kim	
7,978,721	B2	7/2011	Jeddeloh et al.	
7,990,171	B2	8/2011	Chung et al.	
7,999,367	B2	8/2011	Kang et al.	
8,001,434	B1	8/2011	Lee et al.	
8,019,589	B2	9/2011	Rajan et al.	
8,033,836	B1	10/2011	Bhakta et al.	
2006/0233012	A1	10/2006	Sekiguchi et al.	
2006/0259678	A1*	11/2006	Gervasi	711/2
2007/0096332	A1	5/2007	Satoh et al.	
2008/0025123	A1	1/2008	Rajan et al.	
2008/0025137	A1*	1/2008	Rajan et al.	365/239
2008/0094808	A1	4/2008	Kanapathippillai et al.	
2008/0253085	A1	10/2008	Soffer	
2008/0296779	A1	12/2008	Matsui et al.	
2009/0070727	A1	3/2009	Solomon	
2009/0103345	A1	4/2009	McLaren et al.	
2009/0290442	A1	11/2009	Rajan	
2010/0020583	A1	1/2010	Kang et al.	
2010/0090338	A1	4/2010	Lee et al.	
2010/0174858	A1	7/2010	Chen et al.	
2011/0006360	A1	1/2011	Ikebuchi	
2011/0016250	A1	1/2011	Lee et al.	
2011/0016269	A1	1/2011	Lee et al.	
2011/0050320	A1	3/2011	Gillingham	
2011/0108888	A1	5/2011	Or-Bach et al.	
2011/0125982	A1	5/2011	Choi et al.	
2011/0156232	A1	6/2011	Youn et al.	
2011/0169171	A1	7/2011	Marcoux	
2011/0193226	A1*	8/2011	Kirby et al.	257/738

OTHER PUBLICATIONS

Ahmad et al., "Modeling of peak-to-peak switching noise along a vertical chain of power distribution TSV pairs in a 3D stack of ICs interconnected through TSVs," Norchip Conference, Article No. 5669473, Nov. 15-16, 2010, IEEE Computer Society.

Black et al., "Die Stacking (3D) Microarchitecture," MICRO-39, 39th Annual IEEE/ACM International Symposium on, Dec. 2006, 469-479, Orlando, FL.

Daneshtalab et al., "CMIT—A novel cluster-based topology for 3D stacked architectures," 3D Systems Integration Conference (3DIC), 2010 IEEE International, Nov. 16-18, 2010, pp. 1-5.

Funaya et al., "Cache partitioning strategies for 3-D stacked vector processors," IEEE 3D System Integration Conference, article No. 5751453, Nov. 16-18, 2010, IEEE Computer Society.

Ghosh et al., "Smart Refresh: An Enhancement Memory Controller Design for Reducing Energy in Conventional and 3D Die-Stacked DRAMs," Microarchitecture, 2007, 40th Annual IEEE/ACM International Symposium, Dec. 1-5, 2007, pp. 134-145.

Kang et al., "8 Gb 3-D DDR3 DRAM using through-silicon-via technology," IEEE Journal of Solid-State Circuits, v 45, n. 1, 111-19, Jan. 2010, IEEE, USA.

U.S. Appl. No. 12/422,912, filed Apr. 13, 2009, Hyun Lee, et al.

U.S. Appl. No. 12/422,853, filed Apr. 13, 2009, Hyun Lee, et al.

U.S. Appl. No. 12/815,339, filed Jun. 14, 2010, Hyun Lee.

Kang et al., "Signal integrity and reliability of a new Multi-Stack Package using a Pressure Conductive Rubber," Electrical Design of Advanced Packaging and Systems Symposium, 214-17, Dec. 2008, Seoul, South Korea.

Kawano, "A 3D Packaging Technology for High-Density Stacked DRAM," VLSI Technology, Systems and Applications, 2007, Apr. 23-25, 2007, pp. 1-2.

Kurita et al., "A 3-D packaging technology with highly-parallel memory/logic interconnect," IEICE Transactions on Electronics, v E92-C, No. 12, pp. 1512-1522, 2009, Maruzen Col, Ltd.

Kurita et al., "Vertical Integration of Stacked DRAM and High-Speed Logic Device Using SMAFTI Technology," Advanced Packaging, IEEE Transactions, Aug. 2009, vol. 32 Issue 3, pp. 657-665.

"Posts Tagged '3D Stacking'," from Chip Design Mag., http://chipdesignmag.com/lpd/blog/tag/3d-stacking/ (Printed Oct. 13, 2011).

Russell, Gill, "Intel Micron Hybrid Memory Cube: The Future of Exascale Computing," Bright Side of News. Sep. 19, 2011, <http://www.brightsideofnews.com/news/2011/9/19/intel-micron-hybrid-memory-cube-the-future-of-exascale-computing.aspx> Printed Oct. 13, 2011 in 8 pages.

Loh, "3D-Stacked Memory Architectures for Multi-core Processors," Proceedings of the 35th Annual International Symposium on Computer Architecture (ISCA '08), 453-464, IEEE Computer Society, Washington DC, USA.

Val, "The 3D interconnection applications for mass memories and microprocessors," Proceedings of the Technical Conference, 1991 International Electronic Packaging Conference, 851-60, vol. 2, 1991, Int. Electron. Packaging Soc, Wheaton, IL, USA, 2008.

Weis et al., "Design space exploration for 3D-stacked DRAMs," Proceedings—Design, Automation and Test in Europe Conference and Exhibition, 2011.

Zhang et al. "A Customized Design of DRAM Controller for On-Chip 3D DRAM Stacking" Custom Integrated Circuits Conference (CICC), 2010 IEEE, Sep. 19-22, 2010, pp. 1-4.

* cited by examiner

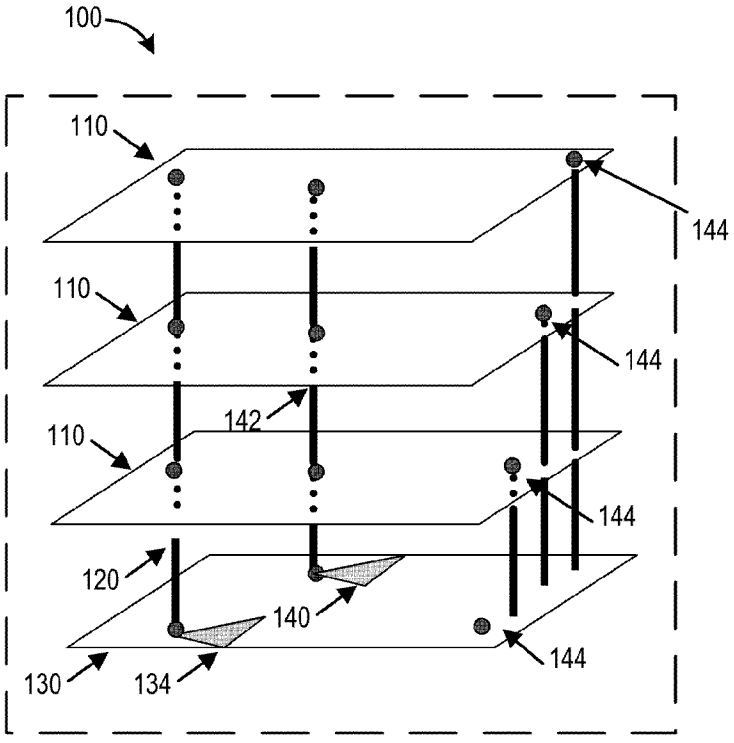
100
110
110
110
144
144
144
144
142
120
140
130
134

FIG. 1A

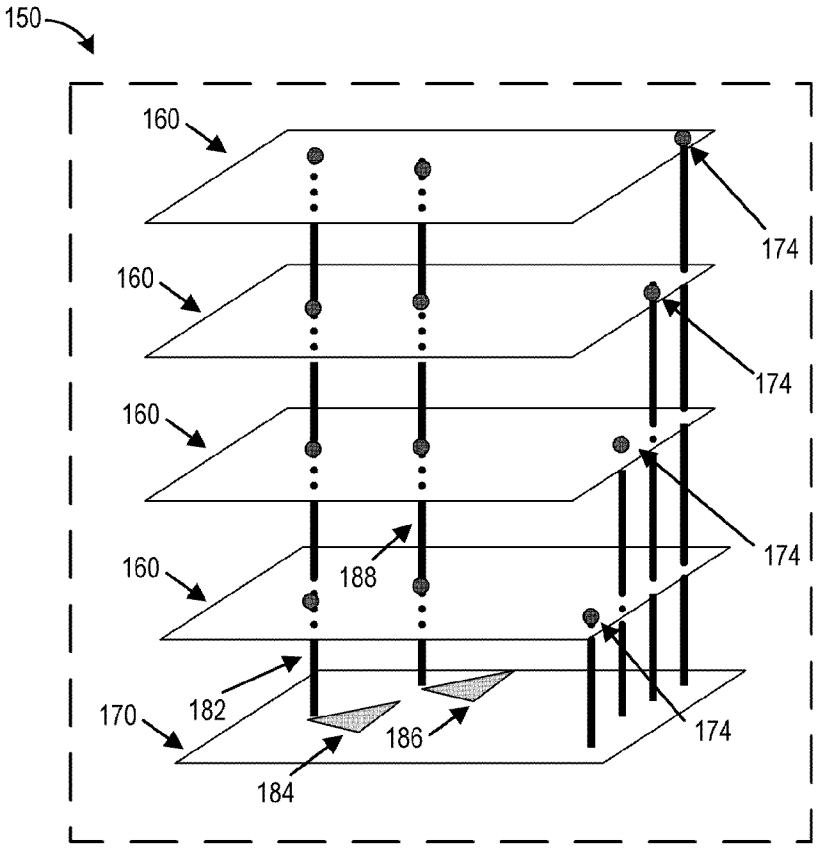
150
160
160
160
160
174
174
174
174
188
170
182
186
184

FIG. 1B

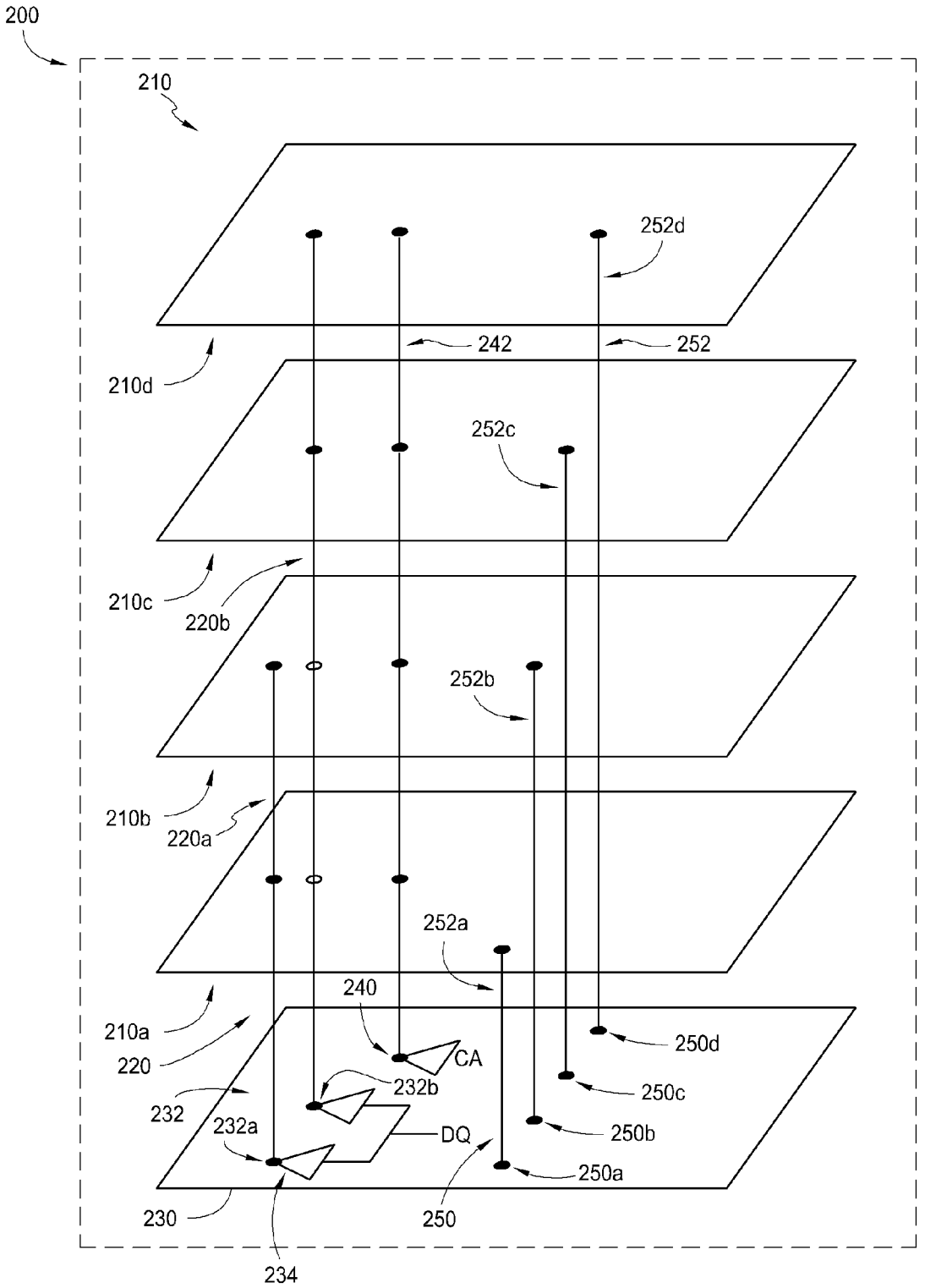
200
210
252d
242
252
210d
252c
210c
220b
252b
210b
220a
252a
240
210a
220
CA
250d
232b
250c
232
232a
DQ
250b
250a
230
250
234

FIG. 2

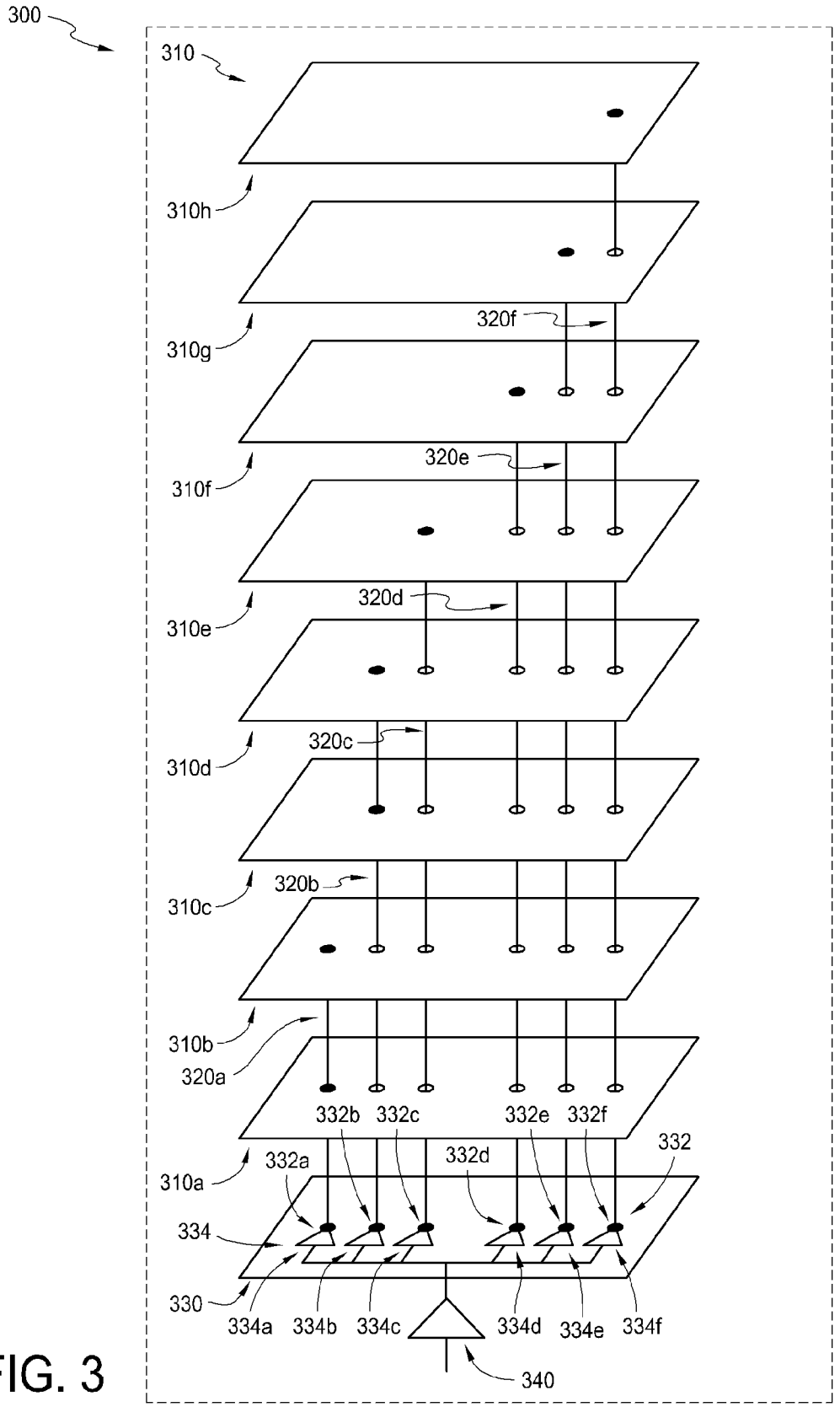
300
310
310h
310g
320f
310f
320e
310e
320d
310d
320c
310c
320b
310b
320a
332b
332c
332e
332f
332
332a
332d
310a
334
330
334a
334b
334c
334d
334e
334f
340

FIG. 3

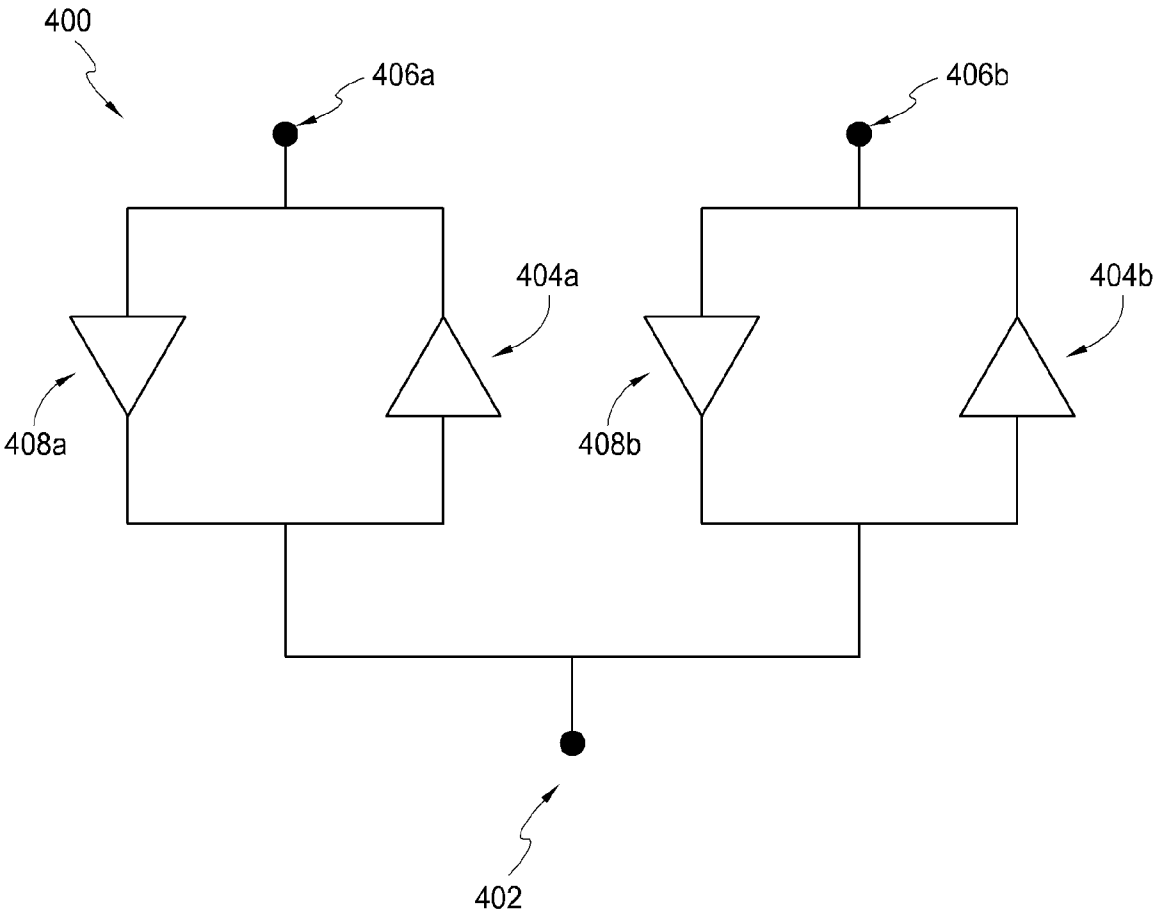

FIG. 4

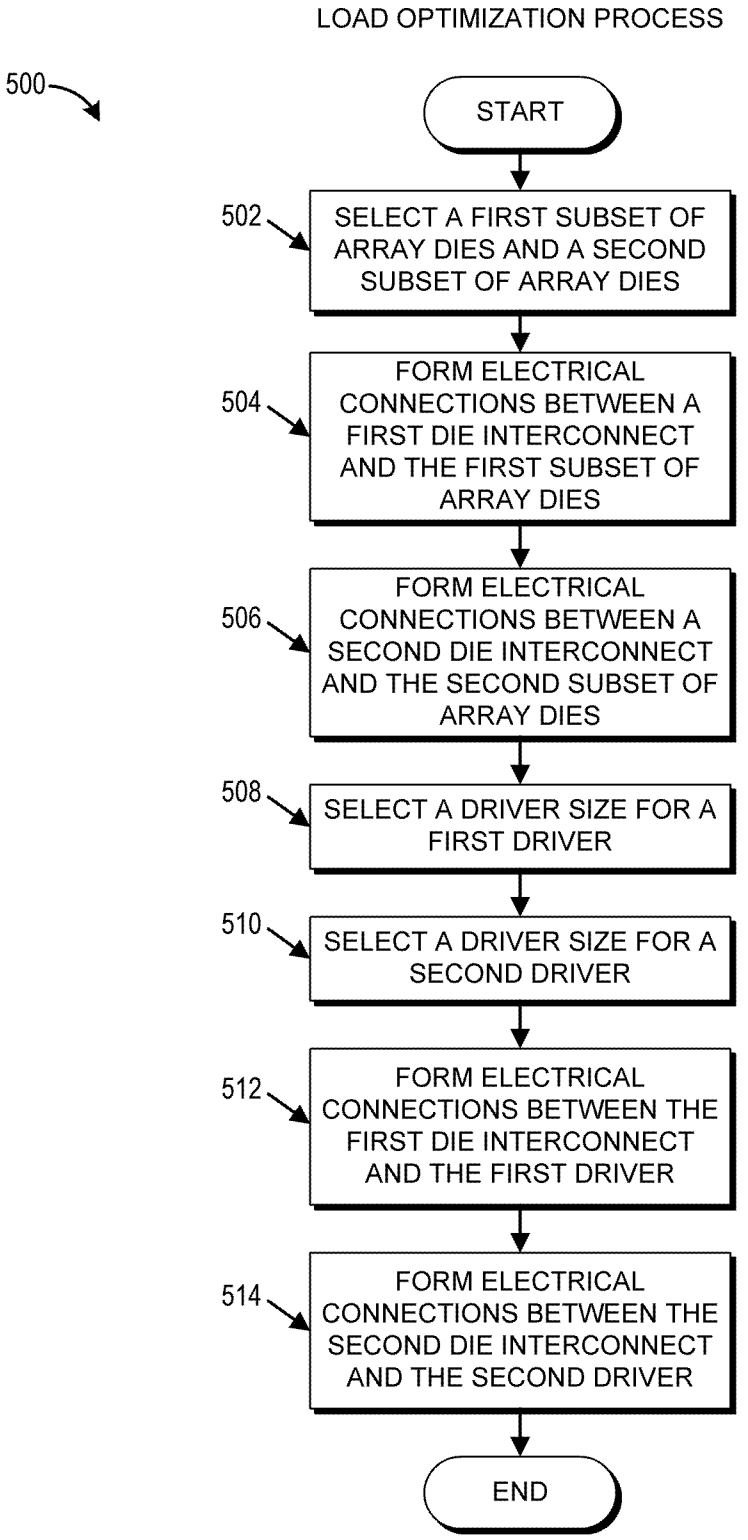
LOAD OPTIMIZATION PROCESS
500
START
502
SELECT A FIRST SUBSET OF ARRAY DIES AND A SECOND SUBSET OF ARRAY DIES
504
FORM ELECTRICAL CONNECTIONS BETWEEN A FIRST DIE INTERCONNECT AND THE FIRST SUBSET OF ARRAY DIES
506
FORM ELECTRICAL CONNECTIONS BETWEEN A SECOND DIE INTERCONNECT AND THE SECOND SUBSET OF ARRAY DIES
508
SELECT A DRIVER SIZE FOR A FIRST DRIVER
510
SELECT A DRIVER SIZE FOR A SECOND DRIVER
512
FORM ELECTRICAL CONNECTIONS BETWEEN THE FIRST DIE INTERCONNECT AND THE FIRST DRIVER
514
FORM ELECTRICAL CONNECTIONS BETWEEN THE SECOND DIE INTERCONNECT AND THE SECOND DRIVER
END

FIG. 5

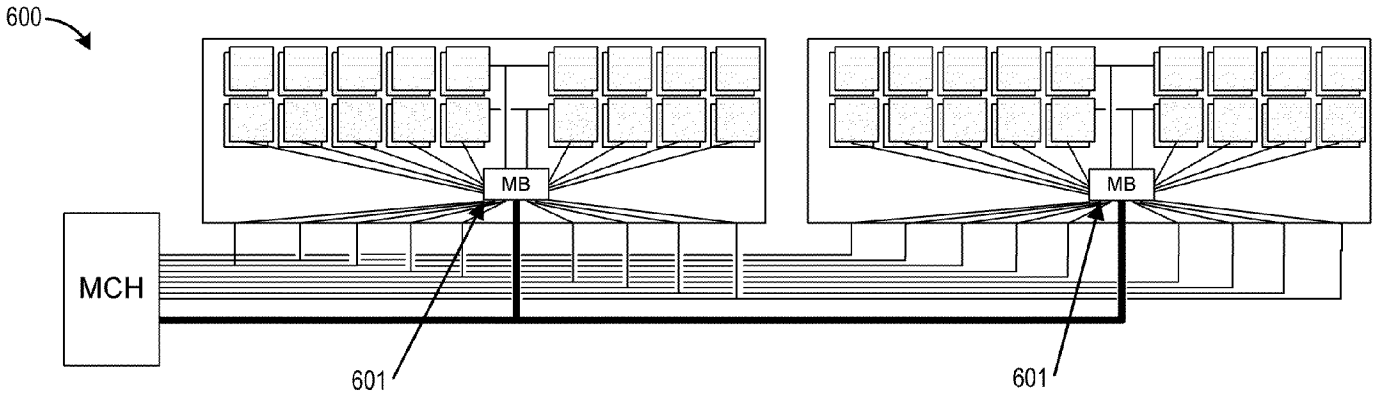

FIG. 6A

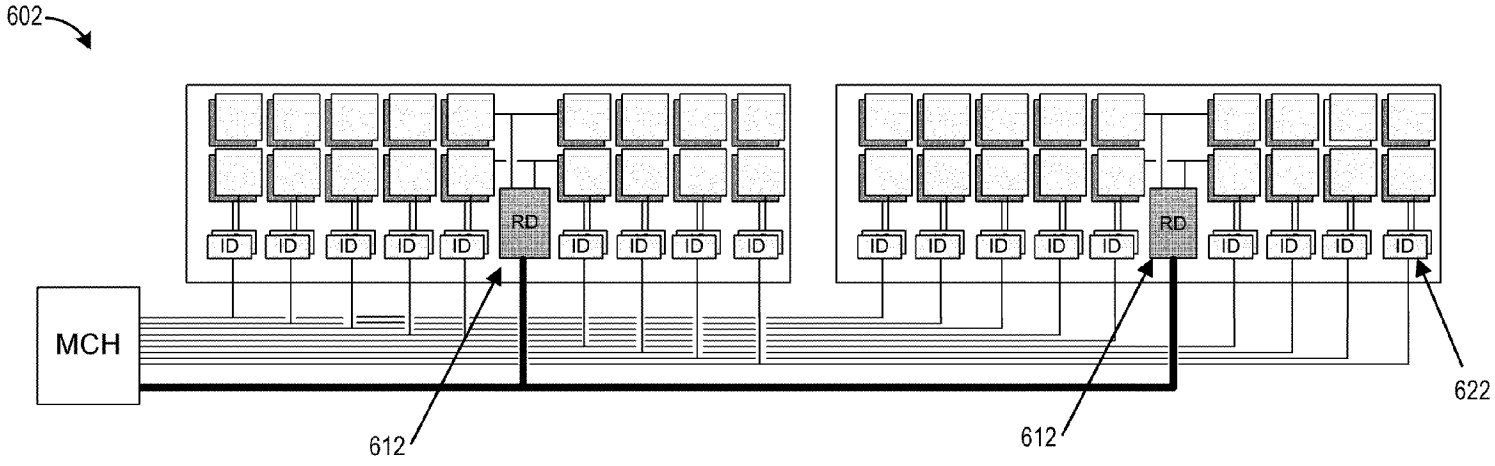

FIG. 6B

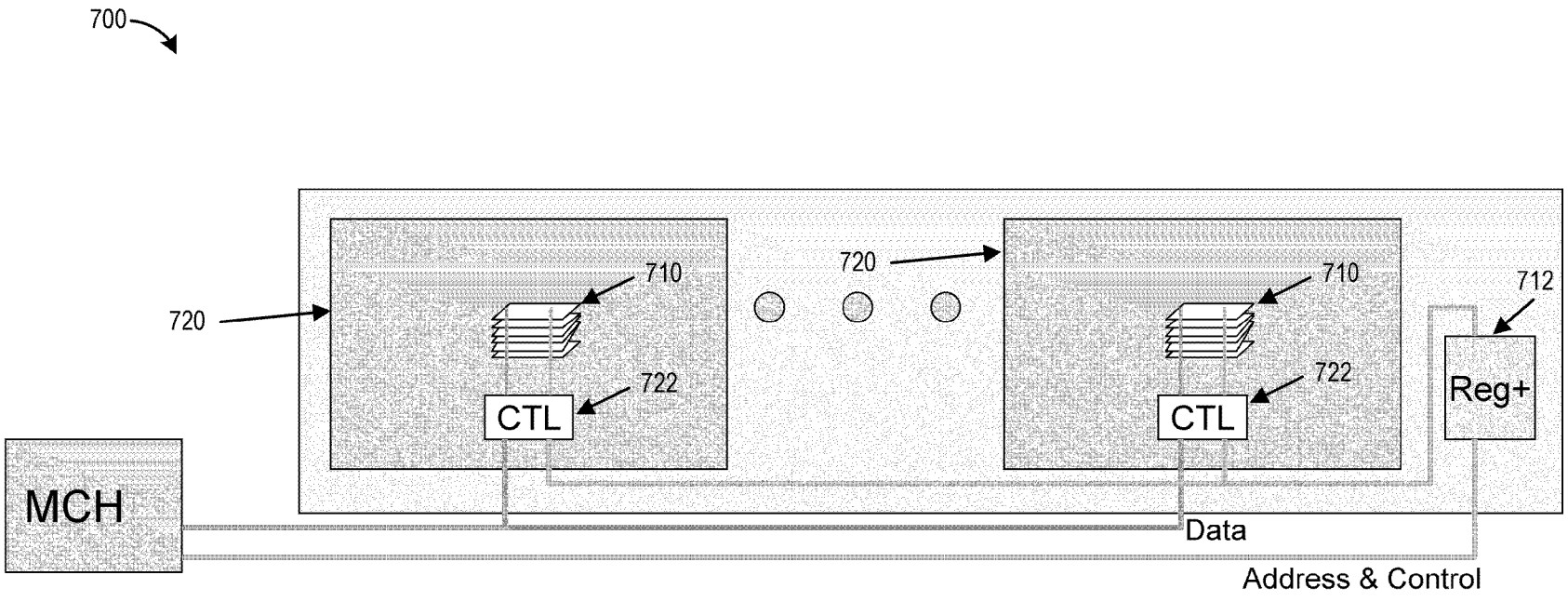
700
720
710
722
CTL
720
710
722
CTL
712
Reg+
MCH
Data
Address & Control

FIG. 7

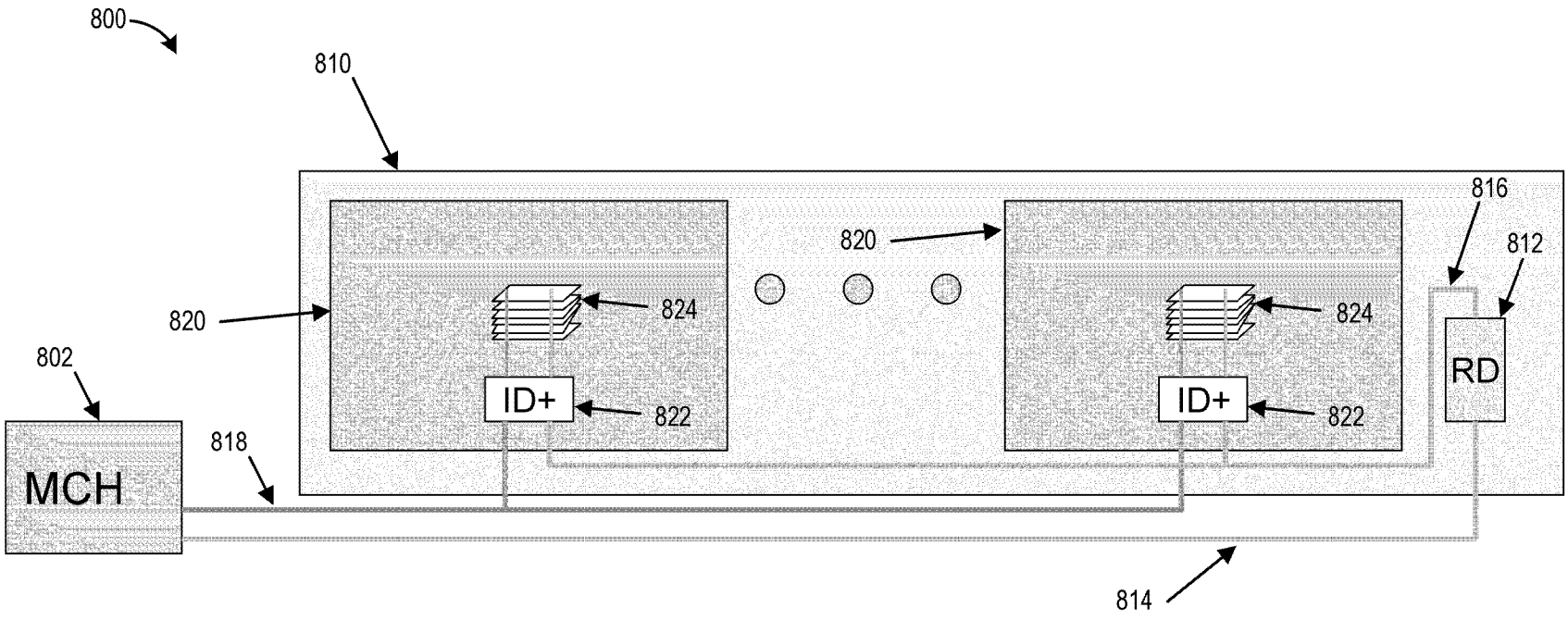

FIG. 8

METHOD AND APPARATUS FOR OPTIMIZING DRIVER LOAD IN A MEMORY PACKAGE

RELATED APPLICATION

This application claims the benefit of priority under 35 U.S.C. §119(e) of U.S. Provisional Patent Application No. 61/409,893, filed on Nov. 3, 2010, and entitled "ARCHITECTURE FOR MEMORY MODULE WITH PACKAGES OF THREE-DIMENSIONAL STACKED (3DS) MEMORY CHIPS," the disclosure of which is hereby incorporated by reference in its entirety.

BACKGROUND

1. Technical Field

The present disclosure relates to memory devices and memory modules. More specifically, the present disclosure relates to systems and methods for reducing the load of drivers of memory packages included on the memory modules.

2. Description of the Related Art

Memory modules may include a number of memory packages. Each memory package may itself include a number of array dies that are packaged together. Each array die may include an individual semiconductor chip that includes a number of memory cells. The memory cell may serve as the basic building block of computer storage representing a single bit of data.

FIGS. **1**A and **1**B schematically illustrate examples of existing memory package designs currently used or proposed to be used to provide the dynamic random-access memory of memory modules. FIG. **1**A schematically illustrates a memory package **100** with three array dies **110** and a control die **130**. The control die **130** is configured to respond to signals received by the memory package **100** by sending appropriate control signals to the array dies **110** and includes a driver **134** for driving data signals to each of the array dies **110** via a corresponding die interconnect **120**. Further, the control die **130** includes a driver **140** for driving command and/or address signals to each of the array dies **110** via another corresponding die interconnect **142**. For simplicity, FIG. **1**A shows only a single driver **134**, die interconnect **120**, driver **140**, and die interconnect **142**. However, additional drivers and die interconnects may be included for each bit the memory package **100** is designed to support. Thus, a 16-bit memory may include 16 pairs of drivers and die interconnects for the data signals and other similar drivers and die interconnects for the command and/or address signals. Each array die **110** also includes a chip select port **144**, with the chip select ports **144** of the array dies **110** configured to receive corresponding chip select signals to enable or select the array dies for data transfer. The array dies **110** are configured to transfer data (e.g. read or write) to or from the selected memory cells identified by the command, address, and chip select signals via the die interconnects.

In some cases, the control die **130** may include memory cells and therefore, also serve as an array die. Thus, as can be seen from FIG. **1**A, the control die **130** may also include a chip select port **144**. Alternatively, the control die **130** and the array dies **110** may be distinct elements and the control die **130** may not include any memory cells.

FIG. **1**B schematically illustrates an example of a memory package **150** that includes four array dies **160** and a control die **170** that does not include memory cells. As can be seen in FIG. **1**B, each array die **160** includes a chip select port **174**. However, because the control die **170** does not also serve as an array die, the control die **170** does not include a chip select port. As with memory package **100**, memory package **150** includes a driver **184** that drives data signals to each of the array dies **160** along a corresponding die interconnect **182**. Further, the memory package **150** includes a driver **186** for driving command and/or address signals to each of the array dies **160** via another die interconnect **188**.

Generally, a load exists on each of the drivers **134**, **140**, **184**, and **186** by virtue of the drivers being in electrical communication with the corresponding die interconnects and the corresponding circuitry of the array dies. Thus, to drive a signal along a die interconnect, a driver typically must be large enough to overcome the load on the driver. However, generally a larger driver not only consumes more space on the control die, but also consumes more power.

SUMMARY

In certain embodiments, an apparatus is provided that comprises a plurality of array dies having data ports. The apparatus further comprises at least a first die interconnect and a second die interconnect. The first die interconnect is in electrical communication with at least one data port of a first array die of the plurality of array dies and at least one data port of a second array die of the plurality of array dies and not in electrical communication with the data ports of at least a third array die of the plurality of array dies. The second die interconnect is in electrical communication with at least one data port of the third array die and not in electrical communication with the data ports of the first array die and the data ports of the second array die. In addition, the apparatus comprises a control die. The control die comprises at least a first data conduit configured to transmit a data signal to the first die interconnect and to not transmit the data signal to the second die interconnect, and at least a second data conduit configured to transmit the data signal to the second die interconnect and to not transmit the data signal to the first die interconnect.

In certain embodiments, an apparatus is provided that comprises a plurality of array dies having ports. The apparatus further comprises at least a first die interconnect and a second die interconnect. The first die interconnect is in electrical communication with at least one port of a first array die of the plurality of array dies and at least one port of a second array die of the plurality of array dies and not in electrical communication with the ports of at least a third array die of the plurality of array dies. The second die interconnect is in electrical communication with at least one port of the third array die and not in electrical communication with the ports of the first array die and the ports of the second array die. In addition, the apparatus comprises a control die. The control die comprises at least a first conduit configured to transmit a signal to the first die interconnect and to not transmit the signal to the second die interconnect, and at least a second conduit configured to transmit the signal to the second die interconnect and to not transmit the signal to the first die interconnect. Moreover, a first load on the first conduit comprises a load of the first die interconnect, a load of the first array die, and a load of the second array die. In addition, a second load on the second conduit comprises a load of the second die interconnect and a load of the third array die.

In certain embodiments, a method is provided for optimizing load in a memory package. The memory package comprises a plurality of array dies, at least a first die interconnect and a second die interconnect, and a control die. The control die comprises at least a first driver and a second driver, the first driver configured to drive a signal along the first die interconnect, and the second driver configured to drive the signal

along the second die interconnect. The method comprises selecting a first subset of array dies of the plurality of array dies and a second subset of array dies of the plurality of array dies. The first subset of array dies and the second subset of array dies are exclusive of one another and are selected to balance a load on the first driver and on the second driver based at least in part on array die loads of array dies of the plurality of array dies and at least in part on die interconnect segment loads of segments of at least the first die interconnect and the second die interconnect. The method further comprises forming electrical connections between the first die interconnect and the first subset of array dies. In addition, the method comprises forming electrical connections between the second die interconnect and the second subset of array dies.

In certain embodiments, an apparatus is provided that comprises a register device configured to receive command/address signals from a memory control hub and to generate data path control signals. The apparatus further comprises a plurality of DRAM packages. Each of the DRAM packages comprises a control die. The control die comprises a plurality of command/address buffers and a data path control circuit configured to control command/address time slots and data bus time slots. The control die is configured to receive data signals from the memory control hub, the data path control signals from the register device, and command/address signals from the register device. Further, each of the DRAM packages comprises a plurality of DDR DRAM dies operatively coupled to the control die to receive the data signals from the control die. Moreover, the memory module is selectively configurable into at least two operational modes. The two operational modes comprise a first operational mode and a second operational mode. In the first operational mode the register device generates the data path control signals, and the control die uses the data path control signals to operate the data path control circuit. In the second operational mode, the control die operates the data path control circuit to provide the command/address signals to the plurality of DDR DRAM dies without decoding the command/address signals.

BRIEF DESCRIPTION OF THE DRAWINGS

Throughout the drawings, reference numbers are re-used to indicate correspondence between referenced elements. The drawings are provided to illustrate certain example embodiments of the inventive subject matter described herein and not to limit the scope thereof.

FIGS. **1**A and **1**B schematically illustrate examples of existing memory package designs.

FIG. **2** schematically illustrates an example embodiment of a memory package in accordance with the present disclosure.

FIG. **3** schematically illustrates another example embodiment of a memory package in accordance with the present disclosure.

FIG. **4** schematically illustrates an example embodiment of a driver structure of a control die in accordance with the present disclosure.

FIG. **5** presents a flowchart for an example embodiment of a load optimization process.

FIGS. **6**A and **6**B schematically illustrate an example of a Load Reduction Dual In-line Memory Module (LRDIMM) and a HyperCloud™ Dual In-line Memory Module (HCDIMM) architecture respectively.

FIG. **7** schematically illustrates an example of a Three-Dimensional Structure Dual In-line Memory Module (3DS-DIMM) architecture.

FIG. **8** schematically illustrates an example embodiment of a memory module architecture in accordance with the present disclosure.

DETAILED DESCRIPTION OF SPECIFIC EMBODIMENTS

In addition to the below, the following U.S. patents are incorporated in their entirety by reference herein: U.S. Pat. Nos. 7,289,386, 7,286,436, 7,442,050, 7,375,970, 7,254,036, 7,532,537, 7,636,274, 7,630,202, 7,619,893, 7,619,912, 7,811,097. Further, the following U.S. patent applications are incorporated in their entirety by reference herein: U.S. patent application Ser. Nos. 12/422,912, 12/422,853, 12/577,682, 12/629,827, 12/606,136, 12/874,900, 12/422,925, 12/504,131, 12/761,179, and 12/815,339.

Certain embodiments of the present disclosure reduce the size of drivers that are configured to drive a signal, such as a data signal, along a die interconnect to one or more array dies. Further, certain embodiments of the present disclosure reduce the power consumption of the drivers.

In certain embodiments, reducing one or both of driver size and driver power consumption may be accomplished by increasing the number of die interconnects and reducing the number of array dies that are in electrical communication with each die interconnect. For example, instead of one die interconnect in electrical communication with four array dies, there may be two die interconnects, each in electrical communication with a different pair of the four array dies.

In certain embodiments, determining the number of die interconnects and the number of array dies in electrical communication with each die interconnect is based, at least in part, on a load of each array die and a load of the die interconnect that is in electrical communication with one or more of the array dies.

In some embodiments, the load contribution from a die interconnect may be negligible compared to the load contribution from the array dies. In such embodiments, determining the number of die interconnects and the number of array dies in electrical communication with each die interconnect may be based, at least in part, on a load of each array die without considering the load of the die interconnect. However, as the physical size of a memory package shrinks, the load of a die interconnect becomes a non-negligible value relative to the load of the array dies. Thus, as memory packages become physically smaller, it becomes more important to consider the load of the die interconnect in determining the number of die interconnects and the number of array dies in electrical communication with each die interconnect. Advantageously, certain embodiments of the present disclosure account for both the loads of the array dies and the loads of the die interconnects on a conduit (e.g., driver) in determining the number of die interconnects to be used and the number of array dies in electrical communication with each die interconnect.

FIG. **2** schematically illustrates an example embodiment of a memory package **200** in accordance with the present disclosure. One example of a memory package that includes array dies and a control die is the Hybrid Memory Cube (HMC). Examples of an HMC compatible with certain embodiments described herein are described by the IDF2011 Intel Developer Forum website, http://www.intel.com/idf/index.htm, which includes presentations and papers from the IDF2011 Intel Developer Forum including the keynote address given by Justin Rattner on Sep. 15, 2011. Additional examples of an HMC compatible with certain embodiments described herein are described by the Hybrid Memory Cube Consortium website, http://www.hybridmemorycube.org.

The memory package **200** can include any type of memory package. For example, the memory package **200** may be a DRAM package, a SDRAM package, a flash memory package, or a DDR SDRAM package (e.g., DDR3, DDR4), to name a few. A memory module (not shown) may include one or more memory packages in accordance with the memory package **200**. Further, the memory package **200** may include input/output terminals (not shown) that are configured to be placed in electrical communication with circuitry of the memory module to transmit signals between the memory package **200** and a Memory Control Hub (MCH) (not shown).

The memory package **200** may include a plurality of array dies **210** (e.g., array dies **210***a*-**210***d*). The plurality of array dies **210** may be sealed within the memory package **200**. Further, circuitry of the array dies **210** may be in electrical communication with the input/output terminals of the memory package **200**. Although generally referred to as array dies herein, the array dies **210** may also be called slave dies or slave chips. Each of the array dies **210***a*-**210***d* may include circuitry (e.g., memory cells) (not shown) for storing data. Examples of array dies compatible with certain embodiments described herein are described by the existing literature regarding the Hybrid Memory Cube (e.g., as cited above). As illustrated in FIG. **2**, the plurality of array dies **210** may be arranged in a stack configuration known as a three-dimensional structure (3DS). Examples of 3DS compatible with certain embodiments described herein are described by the existing literature regarding the Hybrid Memory Cube (e.g., as cited above). However, the structure or layout of the plurality of array dies **210** is not limited as such, and other structures are possible in accordance with the present disclosure. For example, the plurality of array dies **210** may be arranged in a planar structure, or in a structure that combines 3DS with a planar structure. Moreover, while the memory package **200** is illustrated as including four array dies, the memory package **200** is not limited as such and may include any number of array dies. For example, as illustrated in FIG. **3**, the memory package **200** may include eight array dies. As further examples, the memory package **200** may include three or sixteen array dies.

Each of the array dies **210** may include one or more data ports (not shown). The data ports enable electrical communication and data transfer between the corresponding memory circuitry of the array dies **210** and a communication pathway (e.g., a die interconnect).

In the example schematically illustrated in FIG. **2**, the memory package **200** includes a plurality of die interconnects **220** (e.g., die interconnects **220***a*, **220***b*). For example, certain versions of HMC have been reported to have 512 data ports per die, with the corresponding bits of each die all connected to a single die interconnect (e.g., TSV). Examples of die interconnects include, but are not limited to, through-silicon vias (TSV), conducting rods, wire bonds, and pins. (See e.g., U.S. Pat. Nos. 7,633,165 and 7,683,459.) Each of these die interconnects **220** may be coupled to, or in electrical communication with at least one data port of at least one of the array dies **210**. In certain embodiments, at least one of the die interconnects **220** is in electrical communication with at least one data port from each of at least two array dies **210** without being in electrical communication with a data port from at least one array die **210**, which may be in electrical communication with a different die interconnect **220**.

For example, die interconnect **220***a* may be in electrical communication with a data port from array die **210***a* and a data port from array die **210***b* (as illustrated by the darkened circles in FIG. **2**) and not in electrical communication with any data ports from array die **210***c* or any data ports from array die **210***d*. The data ports of array dies **210***a* and **210***b* in electrical communication with the die interconnect **220***a* can be corresponding to the same data bit (e.g., D**0**). Other die interconnects (not shown) can be in electrical communication with other data ports corresponding to other data bits (e.g., D**1**, D**2**, . . .) of array dies **210***a* and **210***b*. These other die interconnects can be electrically isolated from the corresponding data ports of array dies **210***c* and **210***d*.

However, continuing this example, the die interconnect **220***b* may be in electrical communication with a data port from array die **210***c* and a data port from array die **210***d* (as illustrated by the darkened circles in FIG. **2**) (e.g., corresponding to the same data bit, e.g., D**0**) without being in electrical communication with any data ports from array die **210***a* and array die **210***b*. Other die interconnects (not shown) can be in electrical communication with other data ports corresponding to other data bits (e.g., D**1**, D**2**, . . .) of array dies **210***c* and **210***d*. Despite not being in electrical communication with any data ports from array die **210***a* and **210***b*, in some implementations, the die interconnect **220***b* may pass through the array dies **210***a* and **210***b* (as illustrated by the unfilled circles) e.g., through through-holes or vias of array dies **210***a* and **210***b*. For some implementations, each of the array dies **210** may be in electrical communication with corresponding die interconnects **220**, without any of the die interconnects **220** being in electrical communication with all of the array dies **210**. Where existing systems may utilize a single die interconnect to be in electrical communication with the corresponding data ports of each array die (e.g., the data ports corresponding to the same bit), certain embodiments described herein utilize multiple die interconnects to provide electrical communication to the corresponding data ports of the array dies (e.g., the data ports corresponding to the same data bit) with none of the multiple die interconnects in electrical communication with data ports of all the array dies.

In addition to the plurality of array dies **210**, the memory package **200** includes a control die **230**, which may also be called a master die. Examples of master dies compatible with certain embodiments described herein are described by the existing literature regarding the Hybrid Memory Cube (e.g., as cited above). In some embodiments, the control die **230** may be one of the array dies **210**. Alternatively, the control die **230** may be a modified version of one of the array dies **210**. Thus, in some implementations, memory package **200** may include four dies or chips instead of the five illustrated in FIG. **2**. Further, in some embodiments, the control die **230** may comprise a logic layer (e.g., the logic layer of an HMC).

The control die **230** may include a number of data conduits **232**, which includes data conduits **232***a* and **232***b*. Each of these data conduits **232** may be configured to transmit a data signal to a single die interconnect **220**. For example, the data conduit **232***a* may be configured to transmit a data signal to the die interconnect **220***a* without transmitting the data signal to the die interconnect **220***b*. Conversely, the data conduit **232***b* may be configured to transmit the data signal to the die interconnect **220***b* without transmitting the data signal to the die interconnect **220***a* (e.g., data conduit **232***b* is electrically isolated from die interconnect **220***a* and data conduit **232***a* is electrically isolated from die interconnect **220***b*).

In some embodiments, the data conduits **232** may also include one or more drivers **234** as schematically illustrated by FIG. **2**. The drivers **234** may be configured to drive the data signals along the corresponding die interconnects **220**. In some embodiments, a single data conduit **232** or driver **234** may be in electrical communication with multiple die interconnects **220**, each of which may be in electrical communication with different array dies **210**.

Each of the data conduits **232** may be configured to receive the data signal from a common source. For instance, the data conduit **232***a* and the data conduit **232***b* may each receive a substantially similar, if not identical, data signal from the same signal source (e.g. the data signal corresponding to the same data bit). The source of the data signal may include a data path, a driver, a latch, a pin, or any other construct that may provide a data signal to a data conduit.

The data conduits **232** may each be subject to a load. Although not limited as such, this load may be measured as a capacitive load, such as a parasitic capacitance. The load on each of the data conduits **232** may include at least a load of the die interconnect **220** to which the data conduit **232** is coupled or connected as well as a load of each array die **210** with which the die interconnect **220** is in electrical communication via a data port of the die interconnect **220**. Thus, for example, the load of the data conduit **232***a* may include loads of the die interconnect **220***a*, the array die **210***a*, and the array die **210***b*. Similarly, the load of the data conduit **232***b* may include loads of the die interconnect **220***b*, the array die **210***c*, and the array die **210***d*.

Generally, a load that would be on a data conduit that was in electrical communication with a die interconnect that was in electrical communication with at least one data port of each of the array dies **210** can be considered the maximum load for a data conduit. This maximum load is the load of a data conduit of a memory package that does not implement the teachings of this disclosure, but is in accordance with conventional configurations.

In some implementations, the difference between the load of the data conduit **232***a* and the load of the data conduit **232***b* is less than the maximum load for a data conduit as described above. Thus, in some cases, there may exist a degree of balance or equalization between the loads of the data conduits **232***a*, **232***b*. In some implementations, the difference between the load of the data conduit **232***a* and the load of the data conduit **232***b* is zero or substantially zero. In some embodiments, the length of each die interconnect **220**, and the number of array dies **210** in electrical communication with each die interconnect **220** may be selected to maintain the difference between the load of the data conduit **232***a* and the load of the data conduit **232***b* to be at or below a threshold load difference. For example, suppose that the load of each array die **210** is 1, the load of each segment of the die interconnects **220** is 0.25, and that the threshold load difference is 0.5. Using the configuration schematically illustrated in FIG. **2**, the load on the data conduit **232***a* in this example is 2.5 and the load on the data conduit **232***b* in this example is 3. Thus, in this example, the difference between the load of the data conduit **232***a* and the load of the data conduit **232***b* is at the threshold load difference value of 0.5. However, an alternative configuration that places the die interconnect **220***a* in electrical communication with only the array die **210***a*, and the die interconnect **220***b* in electrical communication with the array dies **210***b*-**210***d* would not satisfy the threshold load difference value of 0.5 of the above example. In the alternative configuration, the load on the data conduit **232***a* would be 1.25 and the load on the data conduit **232***b* would be 4. Thus, in the alternative configuration, the difference between the load of the data conduit **232***a* and the load of the data conduit **232***b* is 2.75, which is above the threshold load difference value of 0.5.

For certain embodiments, the load of each data conduit is less than the maximum load as described above. Thus, in some cases, the load of the data conduit **232***a* is less than the maximum load and the load of the data conduit **232***b* is less than the maximum load. Further, in many implementations, the combined load of the data conduit **232***a* and the data conduit **232***b* is less than the maximum load of a single data conduit. In other words, it is possible to design the data conduit **232***a* and the data conduit **232***b* to reduce the overall load compared to a single data conduit that is in electrical communication with a die interconnect that is in electrical communication with at least one data port of each of the array dies **210**. By reducing the overall load compared to the single data conduit, it is possible in many cases to reduce power consumption. Further, it is possible in many cases to maintain signal quality (e.g. maintain signal amplitude, maintain low signal distortion, etc.) while reducing power consumption. Advantageously, in a number of embodiments, by using multiple data conduits instead of a single data conduit, the speed of the memory package **200** can be increased. In some cases, this speed increase can include a reduced latency in accessing array dies **210** and/or operating the memory package **200** at a higher clock frequency.

Each of the die interconnects **220** may include any type of conducting material. For example, the die interconnects **220** may include copper, gold, or a conductive alloy, such as a copper/silver alloy. Further, the die interconnects **220** may include any type of structure for enabling electrical communication between the data conduits **232** and the data ports of the array dies **210**. For example, the die interconnects **220** may include a wire, a conducting rod, or a conducting trace, to name a few. Moreover, the die interconnects **220** may use vias, or through-silicon vias (TSVs) to couple with or to electrically communicate with an array die. For instance, die interconnect **220***a* may be connected with data ports of the array dies **210***a* and **210***b* using vias (illustrated by the filled or darkened circles). Examples of TSVs which may be used with the present disclosure are described further in U.S. Pat. Nos. 7,633,165 and 7,683,459.

In addition, the die interconnects **220** may use via holes to pass through an array die that is not configured to be in electrical communication with the die interconnect. For instance, die interconnect **220***b* may pass through array dies **210***a* and **210***b* using TSVs that do not enable electrical communication between the die interconnect **220***b* and data ports of the array dies **210***a* and **210***b* (illustrated by the unfilled circles). In this way, the array dies **210***a*, **210***b* are not responsive to the data signal beings transmitted by the die interconnect **220***b*. However, the die interconnect **220***b* may be connected with at least one data port of each of the array dies **210***c* and **210***d* using a via (illustrated by the filled or darkened circles). In cases where the die interconnect passes through an array die that is not configured to be in electrical communication with the die interconnect, the TSV may include an insulator or an air gap between the die interconnect and the array die circuitry that is large enough to prevent electrical communication between the die interconnect and the array die circuitry. In certain embodiments, the TSV for array dies that are configured to be in electrical communication with the die interconnect and for array dies that are not configured to be in electrical communication with the die interconnect may be configured the same. However, in such cases, electrical connections leading from the TSV of the array dies that are not configured to be in electrical communication with the die interconnect may not exist or may be stubs. These stubs are not configured to provide electrical communication with the memory cells of the array die.

Although FIG. **2** illustrates a single pair of data conduits **232** corresponding to a single pair of die interconnects **220**, this is only to simplify the drawing figure. The memory package **200** may generally include as many additional data conduits and corresponding die interconnects as the number of

bits the memory package **200** is designed or configured to support per memory address. Thus, if, for example, the memory package **200** is configured to be a 16-bit memory, the memory package **200** may include 16 pairs of data conduits **232** and 16 pairs of corresponding die interconnects **220**. Similarly, if the memory package **200** is configured as a 32- or 64-bit memory, the memory package **200** may include 32 or 64 pairs of data conduits **232** and 32 or 64 pairs of corresponding die interconnects **220**. Generally, the data conduits and die interconnects for each bit are configured identically. Thus, for the memory package **200**, each data conduit is configured to be in electrical communication with a die interconnect that is configured to be in electrical communication with a pair of the array dies **210**. However, it is possible that, in some embodiments, the data conduits and die interconnects of different bits may be configured differently.

In certain embodiments, the same die interconnects and the same corresponding data conduits may be used to transfer data both to and from the array dies **210**. In such embodiments, the die interconnects may be bi-directional. In alternative embodiments, separate die interconnects and corresponding data conduits may be used to transfer data to the array dies **210** and data from the array dies **210** to the control die **230**. Thus, such embodiments may include double the number of die interconnects and data conduits as embodiments that use the same die interconnect to transfer data to and from an array die.

In some embodiments, the control die **230** may include additional command/address conduits **240** and die interconnects **242**, which may be in electrical communication with at least one port of each of the array dies **210**. For simplicity, FIG. **2** shows only a single such conduit **240** and die interconnect **242**. The command/address conduits **240** are configured to provide corresponding signals to the die interconnects **242**. These signals may be command signals, address signals, or may serve as both command and address signals (e.g., may include a memory cell address and a write command or a read command) either simultaneously or based on a determining criterion, such as the edge of a clock signal. The command die **230** may include a command/address conduit **240** and corresponding die interconnect **242** for each bit of the command/address signals that the memory package **200** is configured to support. The number of bits of the command/address signals may be the same or may be different from the number of data bits of the memory package **200**.

In addition, in certain embodiments, the control die **230** may include a plurality of chip select conduits **250** (e.g., chip select conduits **250***a*-**250***d* as shown in FIG. **2**). Further, the control die **230** may include corresponding die interconnects **252** (e.g., die interconnects **252***a*-**252***d*) with one die interconnect **252** in electrical communication with one chip select conduit **250** and one array die **210**. Each of the die interconnects **252** may be in electrical communication with a different array die **210**. For example, the die interconnect **252***a* may be in electrical communication with the array die **210***a* and the die interconnect **252***b* may be in electrical communication with the array die **210***b*. Each of the chip select conduits **250** may be configured to provide a chip select signal to a corresponding array die **210** via a corresponding die interconnect **252**.

In some embodiments, the control die **230** may include additional drivers that are configured to drive the chip select signals along the die interconnects **252**. Alternatively, the chip select signals may be driven by drivers that are external to the control die **230**. For example, a register (not shown) that is part of a memory module that includes the memory package **200** may determine the chip select signals and drive the chip select signals to the array dies **210**. As a second example, the chip select signals may be provided by an MCH. In some embodiments, the control die **230** may determine the array die **210** to select based on, for example, an address signal. In such embodiments, the control die may generate the chip select signals.

FIG. **3** schematically illustrates another example embodiment of a memory package **300** in accordance with the present disclosure. In certain embodiments, some or all of the embodiments described above with respect to the memory package **200** may be applicable to the memory package **300**. However, for ease of illustration and to simplify discussion, certain elements are omitted in FIG. **3**, such as the chip select conduits. Nevertheless, it should be understood that the memory package **300** can include the same or similar elements as described above with respect to the memory package **200**, including, for example, the chip select conduits.

The memory package **300** may include a plurality of array dies **310** (e.g., array dies **310***a*-**310***h*). In the implementation illustrated in FIG. **3**, the memory package includes eight array dies. However, as stated earlier, the memory package **300** may include more or fewer array dies. Each of the array dies **310** may include one or more ports (not shown) that enable electrical communication between the circuitry of the array dies **310** and one or more die interconnects **320**. Each of these die interconnects **320** may be coupled to, or in electrical communication with at least one port of at least one of the array dies **310**. As with the memory package **200**, in certain embodiments, at least one of the die interconnects **320** is in electrical communication with at least one port from each of at least two array dies **310** without being in electrical communication with a port from at least one array die **310**, which may be in electrical communication with a different die interconnect **320**.

In addition to the plurality of array dies **310**, the memory package **300** includes a control die **330**. In some embodiments, the control die **330** may include a number of conduits **332** (e.g., conduits **332***a*-**332***f*). Each of these conduits **332** may be configured to transmit a signal to a single die interconnect **320**.

Further, implementations of the conduits **332** may include one or more drivers **334** (e.g., drivers **334***a*-**334***f*). Each of the drivers **334** may be configured to drive a signal along a corresponding die interconnect **320**. For instance, the driver **334***a* of the conduit **332***a* may be configured to drive a signal along the die interconnect **320***a* to one or more of the array dies **310***a* and **310***b*. As a second example, the driver **334***b* of the conduit **332***b* may be configured to drive a signal along the die interconnect **320***b* to one or more of the array dies **310***c* and **310***d*. Although the die interconnect **320***b* may pass through the array dies **310***a* and **310***b*, because the die interconnect **320***b*, in the example illustrated in FIG. **3**, is not configured to be in electrical communication with the array dies **310***a* and **310***b*, the driver **334***b* does not drive the signal to the array dies **310***a* and **310***b*.

In some embodiments, the signal can be a data signal, a command or address signal, a chip select signal, a supply voltage signal, or a ground voltage signal, to name a few. Further, as the signal is not limited to a data signal, in some embodiments, the conduits **332** may include conduits configured to provide signals other than data signals to the die interconnects **320**. For example, the conduits may include conduits configured to provide a command or address signal, a chip select signal, a supply voltage signal, or a ground voltage signal to one or more die interconnects. Consequently, in some embodiments, the drivers **334** may be configured to drive signals other than data signals.

Generally, the signal that each of the drivers **334** drive to the corresponding die interconnects **320** is from a common source. Thus, each of the drivers **334**, in certain embodiments, is driving the same signal to each corresponding die interconnect **320**.

The size of the drivers **334** is generally related to the load on the driver **334**. In certain embodiments, the load on each driver **334** corresponds to the load of the respective conduit **332**. Although not limited as such, the load may be measured as a capacitive load, such as a parasitic capacitance.

The load on each of the conduits **332** may include at least the loads of the die interconnect **320** with which the conduit **332** is coupled or connected as well as the loads of each array die **310** with which the die interconnect **320** is in electrical communication via a port of the die interconnect **320**. Thus, for example, the loads of the conduit **332***a* may include the loads of the die interconnect **320***a*, the array die **310***a*, and the array die **310***b*. Similarly, the loads of the conduit **332***b* may include the loads of the die interconnect **320***b*, the array die **310***c*, and the array die **310***d*. The loads of both conduits **332***a* and **332***b* include a load of two array dies **310** because the corresponding die interconnects **320** are each configured to be in electrical communication with two array dies **310**. On the other hand, the load of the conduit **332***c*, which may include the loads of the die interconnect **320***c* and the array die **310***e*, includes a load of one array die **310***e* because the corresponding die interconnect **320***c* is configured to be in electrical communication with only one array die **310**.

As previously described with respect to FIG. **2**, a load that would be on a conduit that was in electrical communication with a die interconnect that was in electrical communication with at least one port of each of the array dies **310** can be considered the maximum load for a conduit. This maximum load is the load of a conduit of a memory package that does not implement the teachings of this disclosure, but is used in accordance with conventional configurations.

In some implementations, the difference between the loads of any pair of the conduits **332** is less than the maximum load for a conduit as described above. For instance, the difference between the load of the conduit **332***a* and the load of the conduit **332***b* is less than the maximum load. As a second example, the difference between the load of the conduit **334***f* and any one of the conduits **334***a*-**334***e* is less than the maximum load. Thus, in some cases, the load on each of the conduits **332** may be, at least partially balanced or equalized to reduce or minimize the difference between the load of any pair of the conduits **332**. In some implementations, the difference between the load of a pair of the conduits **332** is zero or substantially zero. In some embodiments, the length of each die interconnect **320**, and the number of array dies **310** in electrical communication with each die interconnect **320** may be selected to maintain the difference between the load of any pair of the conduits **332** to be at or below a threshold load difference.

For certain embodiments, the load of each conduit is less than the maximum load as described above. Thus, for example, the load of the conduit **332***a*, the load of the conduit **332***b*, and the load of the conduit **332***c* are each less than the maximum load defined above.

In certain embodiments, the load associated with each of the array dies **310** may be substantially equivalent. For example, the load of the array die **310***a* may be substantially equal to the load of the array die **310***h*. Thus, the load contribution from the array dies **310** for a specific conduit **332** may be measured as a multiple of the array dies that are in electrical communication with a die interconnect **320** corresponding to a specific conduit **332**. For example, assuming that the load of each of the array dies **310** is then the contribution of the load from the array dies **310** to the conduit **332***a* would be 2L because the die interconnect **320***a* corresponding to the conduit **332***a* is in electrical communication with two array dies **310**, array dies **310***a* and **310***b*. In alternative embodiments, the load of each of the array dies **310***a* may differ. For example, the load of array die **310***a* may be L and the load of the array die **310***b* may be 1.25L.

Similar to the array dies **310**, in some embodiments, a die interconnect **320** can be considered to comprise a plurality of segments, with each segment of a die interconnect **320** contributing a substantially equivalent load to the load of the die interconnect **320**. In this case, the segment of the die interconnect **320** may refer to the portion of the die interconnect between two successive or adjacent dies (array die-to-array die, master die-to-array die, or both) along the die interconnect **320**. Further, the segment may be defined as a portion of the die interconnect **320** between the dies exclusive of a portion of the dies. For example, one segment of the die interconnect **320***a* may extend from the top of the array die **310***a* to the bottom of the array die **310***b*. Alternatively, the segment may be defined to include at least a portion of at least one of the array dies **310**. For example, one segment of the die interconnect **320***a* may extend from the center of array die **310***a* to the center of array die **310***b*. As a second example, one segment of the die interconnect **320***a* may extend from the top of the control die **330** to the top of the array die **310***a*, and therefore may include a portion of the die interconnect **320***a* extending from the bottom of the array die **310***a* to the top of the array die **310***a*. In some implementations, the segments are substantially equal in length to each other. Moreover, the load contribution of each segment may be substantially equal to each other. Alternatively, the segments may be unequal in length and/or may each contribute a different load to the total load of a die interconnect **320**. Further, in some cases, the load contribution of a segment of the die interconnect **320** that is in electrical communication with a port of an array die **310** may differ from the load contribution of a segment of the die interconnect **320** that is not in electrical communication with a port of an array die **310**.

In some cases, the load contribution of each segment of the die interconnect **320** may be measured as a fraction of the load contribution from an array die **310**. For example, the load of one segment of the die interconnect **320***a* may be equivalent to one quarter of the load of an array die **310**. Thus, for example, the load of the conduit **332***a* may be 2.5L assuming a load contribution of L per array die **310** (two in this case) in electrical communication with the die interconnect **320***a* and a load contribution of 0.25L per segment (two in this case) of the die interconnect **320***a*. As a second example, the load of the conduit **332***f* may be 3L assuming the same load values as the previous example and a load contribution from one array die **310***h* and eight die interconnect **320***f* segments. Table 1 specifies the capacitive load values for each conduit **332** assuming, as with the previous two examples, that the load of

each of the array dies **310** is L, and that the load of each segment of the die interconnects **320** is 0.25L. Table 1 also specifies the deviation in load from the conduits having the highest load value, which in this example are conduits **332***b* and **332***f*.

TABLE 1

Conduit	Number of Array Dies	Number of Die Interconnect Segments	Capacitive Load	Deviation from Maximum Load
332a	2	2	2.5 L	0.5
332b	2	4	3 L	0
332c	1	5	2.25 L	0.75
332d	1	6	2.5 L	0.5
332e	1	7	2.75 L	0.25
332f	1	8	3 L	0

As can be seen from Table 1, the maximum load of any conduit **332**, using the example values previously described, is 3L, or rather three times the load of a single array die **310**. Assuming the same example values, the load of a conduit in electrical communication with a die interconnect that itself is in electrical communication with each array die **310** would be 10L. Thus, certain embodiments of the present disclosure enable a reduction in the load of the conduits **332**. Consequently, in some embodiments, the drivers **334** may each be smaller than a single driver that is configured to drive a signal from a conduit along a single die interconnect that is in electrical communication with a port from each of the array dies **310**. Moreover, the drivers **334** may include smaller transistor sizes than a single driver that is configured to drive a signal to each of the array dies **110**.

As can be seen from Table 1, conduits **332***b* and **332***f* have the largest capacitive load of the group of conduits, which is 3L. Conduit **332** has the smallest capacitive load of the group of conduits, which is 2.25L and which is a deviation of only 0.75 from the maximum load. Thus, in some embodiments, each of the drivers **334** may be substantially similar in size. In certain implementations, the drivers **334** may vary in size based on the total capacitive load on each conduit **332**. Thus, the driver **334***f* may be larger than the driver **334***e*. Alternatively, each driver **334** may be substantially equal and may be configured based on the drivers **334** with the largest load, which are drivers **334***b* and **334***f* in the example illustrated in FIG. **3** and Table 1.

In some embodiments, the capacitive load of each conduit **332** or driver **334** can be calculated using formula (1).

$$CL = AD + \frac{S}{M} \tag{1}$$

In formula (1), CL represents the capacitive load of a conduit **332** or driver **334**, AD represents the number of array dies **310** in electrical communication with a die interconnect **320** that is in electrical communication with the conduit **332** and/or driver **334**, S represents the number of die interconnect segments of the die interconnect **320**, and M represents the ratio of the load of an array die **310** to the load of a segment of a die interconnect **320**. Thus, using formula (1) and the example values described above, the load of the driver **332***a*, for example, can be calculated with the following values: AD=2, for two array dies **310**; S=2, for the two segments of the die interconnect **320***a*; and M=4, for the ratio of the load of an array die **310**, L, to the load of a segment of the die interconnect **320***a*, 0.25L. Therefore, as can be seen from Table 1, the capacitive load of the driver **332***a* is 2.5L where L is the load of a single array die.

In some cases, the load on each conduit **332** and/or driver **334** may be evenly balanced. In other words, the load on each conduit **332** and/or driver **334** may be substantially the same. To achieve a balanced load, each of the conduits **332** may be in electrical communication with a combination of array dies **310** and die interconnect **320** segments that results in a load that is substantially equivalent to the loads of the other conduits **332**. In certain embodiments, the load of the conduits **332** is balanced despite each conduit **332** being in electrical communication with a different subset of the array dies **310**. However, in alternative embodiments, the load of each conduit **332** and/or driver **334** may differ. This difference in the load of the conduits **332** and/or drivers **334** may be a design decision (e.g. to maintain a specific number of drivers). Alternatively, or in addition, the load difference between conduits **332** and/or drivers **334** may occur because the loads of the array dies **310** and the die interconnect segments **320** do not allow for perfect or substantially even load balancing.

As previously stated, in some embodiments the loads of the conduits **332** and/or drivers **334** may be balanced to minimize the difference between any pair of conduits **332** and/or drivers **334**. For example, as illustrated in FIG. **3**, a driver in electrical communication with a longer die interconnect, which may consequently include more die interconnect segments, is likely to obtain a larger load contribution from the die interconnect than a driver in electrical communication with a shorter die interconnect (e.g., compare driver **334***f* to **334***a*). Thus, the driver in electrical communication with the longer die interconnect may be in electrical communication with fewer array dies than the driver in electrical communication with the shorter die interconnect (e.g. compare driver **334***f* to **334***a*). The selection of die interconnect length and the selection of array dies to place in electrical communication with the die interconnects may therefore be dependent on the load of each segment of the die interconnects **320** and the loads of the array dies **310**.

Alternatively, or in addition, the loads of the conduits **332** and/or drivers **334** may be balanced to reduce the maximum load of each conduit **332** and/or driver **334**. Further, in some embodiments, the maximum load of each conduit **332** and/or driver **334** may be reduced to maintain the load of each conduit **332** and/or driver **334** to be at or below a threshold load difference.

Although not illustrated in FIG. **3**, each of the conduits **332** may include one or more additional drivers configured to drive a signal received from an array die via a corresponding die interconnect **320**. The additional drivers may drive the signal to a processor, a register, a latch, or any other component or device that may or may not be part of a memory module that includes the memory package **300**. In some implementations, one or more of the die interconnects **320** are configured to be bi-directional, thereby enabling a signal to be driven to the array dies **310** via the die interconnect **320**, and to enable a signal received from the array dies **310** along the same die interconnect **320** to be transmitted to a corresponding conduit **332** of the control die **330**. Alternatively, the memory package **300** comprises one or more die interconnects **320** that are configured to enable a signal to be driven to the array dies **310** without enabling a signal to be received from the array dies **310** (e.g., the die interconnects **320** may not be bi-directional). In certain embodiments where one or more of the die interconnects **320** are not bi-directional, the memory package **300** may include additional die interconnects (not shown) that are in electrical communication with

the one or more additional conduits or drivers and that are configured to enable a signal from the array dies **310** to be transmitted to the one or more additional conduits or drivers.

In addition to the drivers **334** of the control die **330**, the memory package **300** may include one or more pre-drivers **340**. A pre-driver **340**, shown schematically in FIG. **3**, may be large enough to drive a signal (e.g., a data signal) to any of the drivers **332** and subsequently, to any of the array dies **310**. Thus, using the same example values as described above in relation to Table 1, a load of the pre-driver **340** may be at least 10L, which is the load of a conduit in electrical communication with a die interconnect that is in electrical communication with a port from each of the array dies **310**. In some embodiments, the memory package **300** may include any number of additional drivers and/or latches for buffering and/or driving the signal to any of the array dies **310**.

Just as the memory package **300** may include a pre-driver **340** for providing a signal to the conduits **332**, the memory package **300** may include a post-driver (not shown) for driving an output signal from the control die **330**. This post-driver may drive the output signal to additional latches and/or drivers. In some embodiments, the post-driver may drive the signal from the memory package **300** to a bus or other electrical path that is in electrical communication with the memory package **300**.

FIG. **4** illustrates an example embodiment of a driver structure **400** of a control die (e.g. control die **230**) in accordance with the present disclosure. The driver structure **400** is configured for a single data bit. Thus, a control die for a 32-bit memory package will generally include at least 32 instances of the driver structure **400**, one per bit. In some embodiments, the control die **230** may include the driver structure **400** in place of the combination of drivers **232***a* and **232***b*. Similarly, in certain embodiments, the control die **330** may include a structure similar to the driver structure **400** in place of the drivers **334**. In such embodiments, the driver structure **400** would be modified to enable a signal (e.g., data signal) to be driven to the six conduits **332**.

The driver structure **400** can include an input/output port **402** configured to receive or send a signal, such as a data signal. Signals received at the input/output port **402** can be provided to the drivers **404***a* and **404***b*. In turn, these drivers **404***a* and **404***b* can drive the signal to conduits **406***a* and **406***b* respectively, which are in electrical communication with corresponding die interconnects. Each of the die interconnects may be in electrical communication with different array dies in accordance with certain embodiments described herein.

In some embodiments, the driver structure **400** is bi-directional. In such embodiments, operation of the drivers **404***a* and **404***b*, and **408***a* and **408***b* may be controlled or enabled by a control signal (e.g., a directional control signal). This control signal, in some cases, may correspond to one or more of a command/address signal (e.g., read/write) and a chip select signal. In some implementations, the drivers **404***a* and **404***b* may drive a signal to the array die corresponding to the chip select signal, and not to array dies that do not correspond to a chip select signal. For example, suppose the conduit **406***a* is in electrical communication with array dies one and two (not shown), and that the conduit **406***b* is in electrical communication with array dies three and four (not shown). If a chip select signal is received corresponding to array die two, then in some implementations, driver **404***a* may be configured to drive a signal along a die interconnect in electrical communication with the conduit **406***a* to array die one and two. In this example, the driver **404***b* would not drive the signal because the chip select signal does not correspond to either array die three or array die four.

In some embodiments, the drivers **404***a* and **404***b* may drive a signal to all of the array dies. For example, assume the memory package that includes the driver structure **400** also includes four array dies. If the die interconnect in electrical communication with the conduit **406***a* is in electrical communication with two of the array dies, and if the die interconnect in electrical communication with the conduit **406***b* is in electrical communication with the other two array dies, then the drivers **404***a* and **404***b* may drive a signal to all four of the array dies of this example.

Similar to the input/output port **402**, the conduits **406***a* and **406***b* can be configured to receive a signal from the die interconnects that are in electrical communication with the conduits **406***a* and **406***b*. In turn, the signal received at one of the conduits **406***a* and **406***b* can be provided to drivers **408***a* and **408***b* respectively. The drivers **408***a* and **408***b* can each be configured to drive a signal received from a respective data conduit **406***a* and **406***b* to the input/output port **402** and to another component that may be in electrical communication with the input/output port **402**, such as a MCH.

In some embodiments, one or more chip selects, as illustrated in FIG. **2**, may be used to select, determine, or enable the array die that communicates the signal to or from one or more of the conduits **406***a* and **406***b* and the drivers **408***a* and **408***b*. Similarly, in some embodiments, the chip select may select, determine, or enable the array die to receive and/or respond to the signal driven by the drivers **404***a* and **404***b* to the array dies.

It should be noted that the driver structure **400** is a non-limiting example for arranging drivers in a control die. Other driver structures are possible. For example, instead of the drivers **404***a* and **408***a* being in electrical communication with the same conduit **406***a*, each of the drivers **404***a* and **408***a* can be in electrical communication with a separate conduit and consequently a separate die interconnect. In such an example, the drivers **404***a* and **408***a* may still be in electrical communication with the same input/output port **402**, or each driver may be in electrical communication with a separate port, the driver **404***a* in electrical communication with an input port, and the driver **408***a* in communication with an output port.

FIG. **5** presents a flowchart for an example embodiment of a load optimization process **500**. In certain embodiments, the load optimization process **500** may be performed, at least in part, by one or more computing systems. Further, the process **500**, in some embodiments, may be used to optimize one or more loads in a memory package (e.g. memory package **200** or memory package **300**). Optimizing the loads in the memory package can include optimizing the load on one or more conduits and/or drivers. As previously described with respect to FIGS. **2** and **3**, the memory package can include a plurality of array dies, a plurality of die interconnects, and a control die. Furthermore, the control die can include a plurality of drivers, each of which may be configured to drive a signal along a die interconnect.

In some implementations, the process **500** can comprise selecting a first subset of array dies and a second subset of array dies from a plurality of array dies (e.g., array dies **310**), as shown in operational block **502**. Generally, the first subset of array dies and the second subset of array dies may be exclusive of one another. Thus, the first subset of array dies does not include any array dies from the second subset of array dies and vice versa. However, in some cases there may be some overlap between the first subset of array dies and the second subset of array dies. Further, in some cases, at least one of the subsets of array dies includes more than one array die. For instance, the first subset of array dies may include two

array dies, and the second subset of array dies may include one array die, which, depending on the embodiment, may or may not be included in the first subset of array dies.

Further, the first subset of array dies and the second subset of array dies may be selected to balance a load on a first driver and a load on a second driver based, at least in part, on the loads of the array dies **310** and on the loads of the die interconnect segments from a first and a second die interconnect. The first die interconnect may be in electrical communication with the first driver and the second die interconnect may be in electrical communication with the second driver. In some embodiments, the first subset of array dies and the second subset of array dies are selected to balance a load on a first conduit and a load on a second conduit. The load on each driver and/or conduit may be calculated using formula (1) as previously described above. In some embodiments, the first subset of array dies and the second subset of array dies may be selected to balance a load on a first driver and a load on a second driver based, at least in part, on the loads of the array dies **310** without considering the loads of the die interconnect segments from the first die interconnect and the second die interconnect.

The process **500** further comprises forming electrical connections between the first die interconnect and the first subset of array dies in an operational block **504**. The process **500** further comprises forming electrical connections between the second die interconnect and the second subset of array dies in an operational block **506**. Forming the electrical connections places the die interconnects in electrical communication with the respective subsets of array dies. In some embodiments, forming the electrical connections can comprise forming electrical connections between the die interconnects and at least one port from each array die of the respective subsets of array dies.

The process **500** further comprises selecting a driver size for a first driver at block **508** and selecting a driver size for a second driver at block **510**. Selecting the driver size can be based, at least in part, on the calculated load on the driver. Generally, the greater the load on the driver, the larger the driver is selected to drive a signal along, for example, a die interconnect. The size of the driver may be adjusted by the selection of the transistor size and/or number of transistors included in the driver. A larger driver often consumes more power than a smaller driver. Thus, in certain embodiments, balancing the loads on the drivers to reduce the load on each driver can reduce the power consumption of a memory package.

In some embodiments, the size of the first driver and the size of the second driver are both less than the size sufficient for a driver to drive a signal along a die interconnect to each of the array dies **310** (e.g., with less than a predetermined or threshold signal degradation). The threshold signal degradation can be based on any one or more characteristics of a signal. For example, the threshold signal degradation can be based on the amplitude of the signal, the frequency of the signal, the noise distortion included in or introduced into the signal, or the shape of the signal, to name a few.

The process **500** further comprises forming electrical connections between the first die interconnect and the first driver in an operational block **512**. Similarly, the process **500** further comprises forming electrical connections between the second die interconnect and the second driver in an operational block **514**. Forming the electrical connections places the die interconnects in electrical communication with the respective drivers. In some embodiments, forming the electrical connections can comprise forming electrical connections between the die interconnects and a data conduit that includes the respective driver.

Advantageously, certain embodiments of the present disclosure reduce the load on each conduit and on each corresponding driver. In certain embodiments, reducing the load on a driver may increase the speed of data transfer between the array dies and other components in a computer system (e.g. a MCH or a processor). Further, reducing the load on a driver may result in reduced power consumption by the driver and consequently, by the memory package. In addition, certain embodiments of the present disclosure may minimize current switching noise.

Operational Modes

A proposed three-dimensional stacking (3DS) standard for dual in-line memory modules (DIMMs) being considered by the Joint Electron Devices Engineering Council (JEDEC) addresses three major shortcomings in the current JEDEC registered DIMM (RDIMM) and JEDEC load reduced DIMM (LRDIMM) standards (an example LRDIMM structure **600** is schematically illustrated in FIG. **6**A). These shortcomings include:

a) The DIMM density limitation due to the fixed number of chip-select signals received by the DIMM from the system memory controller.

b) The performance loss due to the increased load on the data bus as the DIMM density (e.g., the number of DRAM devices and number of ranks) increases.

c) The upper bound of the DIMM density due to the physical DIMM form factor.

Further, the LRDIMM structure **600** may have timing issues due to signals passing through a single memory buffer **601**. In addition, the increased size of the data path of the LRDIMM architecture **600**, compared to the HCDIMM architecture **602**, an example of which is schematically illustrated in FIG. **6**B, may result in more latency and signal integrity issues.

FIG. **7** schematically illustrates an example memory module **700** that has previously been proposed for the 3DS-DIMM standard. The proposed 3DS Dual In-line Memory Module (3DS-DIMM) schematically illustrated in FIG. **7** attempts to address the above shortcomings using two components, a 3DS register **712** and a controller die **722**. In some implementations, the 3DS-DIMM **700** includes the 3DS register **712** (also known as an enhanced DDR3 register). The 3DS register **712** may include a DDR3 JEDEC standard register with a "rank multiplication" circuit, which increases the number of the output chip-select signals for selecting an array die **710** by decoding one or more higher-order row or column address bits with the incoming chip-select signals from the system controller. The 3DS Register **712** can also include a command/address buffer, a register operational code buffer (RC word buffer), and rank multiplication logic (e.g., supporting rank multiplication of 1-to-2, 1-to-4, and/or 1-to-8). The 3DS register addresses shortcoming (a) of the JEDEC RDIMM and LRDIMM listed above.

Another component of the proposed 3DS-DIMM is a 3DS dynamic random-access memory (DRAM) package **720**. The 3DS DRAM package **720** includes a plurality of stacked DDR DRAM chips **724** or array dies. The 3DS DRAM package **720** has a data I/O load that is equivalent to the data I/O load of a single-die DRAM package, regardless of the actual number of DRAM dies in the 3DS DRAM package **720**. The 3DS DRAM package **720** may comprise a plurality of array dies (e.g., 2, 4 or 8 DDR DRAM dies) and a controller die **722**. The controller die **722** may include data buffers, a data path timing controller, a secondary command/address buffer, a program-

mable secondary 1-to-2 rank decoder, and a data path signal (e.g., ODT, ODT, RTT) controller. Examples of such memory packages include HMC. The 3DS DRAM package **720** addresses the shortcomings (b) and (c) of the JEDEC RDIMM and LRDIMM listed above. However, there are deficiencies in the proposed 3DS-DIMM standard as described below.

The JEDEC DDR3 RDIMM standard contains two major components: a DDR3 register and a plurality of DRAM packages each comprising one or more DRAM chips or dies. The DDR3 register serves as a command/address signal buffer and as a command/control decoder. This DDR3 register holds a set of register control (RC) words, which a computer system configures to ensure the proper operation of the RDIMM. The DDR3 register contains a phase-lock-loop (PLL), which functions as a clock synchronizer for each RDIMM. The DDR3 register outputs a set of buffered command/address signals to all the DRAM packages on the RDIMM, but the data signals are directly fed to the DRAM packages from the system memory controller.

In contrast to the JEDEC DDR3 RDIMM standard, the 3DS-DIMM proposal requires the DRAM package **720** to include the controller die **722** that controls all data paths timing and operations. This arrangement of the DRAM package reduces the load on the data bus, however, it presents three significant shortcomings:

1) The command/address buffer in the 3DS DRAM package introduces clock cycle latency since it needs to provide clock synchronous operation to the DRAM dies in the package.
2) The data path control circuit (e.g., ODT, read/write data direction) in the control die becomes very complicated to support semi-synchronous (fly-by) data path control among all 3DS DRAM packages that are on a DIMM.
3) The variations in the DRAM die timing characteristics within each 3DS DRAM package would be likely to require resynchronization of the data signals during the read/write operations, which increases the read/write latency and the read-to-write and write-to-read turn around time.

The 3DS-DIMM proposal can also be compared to the HyperCloud™ (HC) DIMM architecture of Netlist, Inc. An example of the HCDIMM architecture **602** is illustrated in FIG. **6**B. Further details and embodiments of the HCDIMM architecture is disclosed in U.S. Pat. Nos. 7,289,386, 7,532,537, 7,619,912, and 7,636,274, each of which is incorporated in its entirety by reference herein. One of the main topological differences between the 3DS-DIMM and HCDIMM architectures is that while the 3DS-DIMM architecture uses a control die **722** to buffer the data signals and to decode command/address signals from the 3DS register, certain configurations of the HCDIMM architecture include a plurality of isolation devices (ID), each of which includes data buffers, but no decoding capability. Unlike the HCDIMM architecture, since the command/address signal needs to pass through the control die **722** in the 3DS DRAM package **720**, the 3DS-DIMM proposal presents the same shortcoming (b) of the controller die described above. The data path control signals are generated by the register device (RD) **612** in the HCDIMM architecture **602**, while the data path control signals are generated by the control die **722** in the 3DS DRAM. This aspect of the 3DS-DIMM architecture creates timing critical control paths in 3DS-DIMM architecture.

In certain embodiments described herein, a memory module architecture is proposed that includes a set of device components that support JEDEC 3DS operation with the benefit of RDIMM and HCDIMM architectures (see, e.g., FIG. **8**). This set of device components may comprise two components: a register device **812** (RD), which in some embodiments may be the same or similar RD component as used in HCDIMM architectures, and a plurality of array dies **824**, such as a DDR DRAM Stack Package (DDSP). The DDSP may comprise a DRAM control die that can include command/address buffers and a data path control circuit. Certain embodiments of the architecture described herein differs from the 3DS-DIMM architecture in that instead of the controller die of the 3DS-DIMM (which provides a secondary address buffer, and a second rank multiplication decoder), certain embodiments described herein use an "ID+" die as a control die **822**, which can provide both selective isolation and address pass-through. Selective isolation refers generally to a driver corresponding to an array die driving a signal to the array die in response to a corresponding chip select signal while additional drivers corresponding to additional array dies maintain a previous state (e.g. do not drive the signal). For example, assuming that the memory package **300** implements selective isolation, if a chip select signal is received that corresponds to a selection of array die **310***b*, then the driver **334***a* will drive a signal along the die interconnect **320***a* to the array die **310***b*, and the remaining drivers (e.g., drivers **334***b*-**334***f*) will maintain their state (e.g., not drive the signal). Address pass-through is described in further detail below.

The data path control circuit of certain embodiments may have at least two operational modes: mode-C (HCDIMM/RDIMM Compatible mode) and mode-3DS (3DS DIMM compatible mode). In mode-C, the array dies **824** (e.g. a DDSP) receive the data path control signals from the register device **812**, which can be configured to control a command/address time slot and a data bus time slot. In mode-3DS, the control die **822** internally generates the data path control signals to ensure the proper operation of the data path.

The control die **822** of certain embodiments enables the memory module **800** to work as either a 3DS-DIMM, a RDIMM, or a HCDIMM. However, the memory module **800** may comprise a set of optional control input pins (in addition to the package pins that are included in 3DS-DRAM packages) which in mode-C receive the data path control signals from the register device **812**.

As previously mentioned, FIG. **8** schematically illustrates an example embodiment of a memory module architecture **800** in accordance with the present disclosure. Advantageously, certain embodiments of the memory module architecture **800** address the shortcomings described above without adding complexity or latency, and without causing performance loss. The memory module architecture **800** includes a memory control hub **802** (also known as a memory controller hub, a memory control handler, or a northbridge) and a memory module **810**. As schematically illustrated in FIG. **8**, the memory control hub **802** may communicate directly with one or more components of the memory module **810**. Alternatively, the memory control hub **802** may communicate with one or more intermediary system components (not shown), which in turn communicate with one or more components of the memory module **810**. In some embodiments, the memory control hub **802** may be integrated with another component of the computer system, such as a Central Processing Unit (CPU).

Further, in some embodiments, the memory control hub **802** may communicate with one or more memory modules. Each of the memory modules may be similar or substantially similar to the memory module **810**. Alternatively, some of the memory modules may differ from memory module **810** in configuration, type, or both. For example, some of the memory modules may be capable of operating at different

frequencies, may include a different amount of storage capability, or may be configured for different purposes (e.g. graphics versus non-graphics memory). Although in some cases a system may include memory modules capable of operating at different frequencies, each memory module may be configured to operate at the same frequency when used in a specific device. In certain implementations, the memory control hub **802** may set the operating frequency for the one or more memory modules.

The memory module **810** may include a register device **812**, which is configured to receive command, address, or command and address signals from the memory control hub **802**. For the purpose of simplifying discussion, and not to limit these signals, the signals will be referred to herein as command/address signals.

In some embodiments, the register device **812** receives the command/address signals via a command/address bus **814**. The command/address bus **814**, although illustrated as a single line, may include as many lines or signal conduits as the number of bits of the command/address signal.

Further, the register device **812** may generate data path control signals, which can be provided to a control die **822**, or isolation device, of a memory package **820** via one or more data path control lines **816**. In certain embodiments, the control dies **822** can include some or all of the embodiments described above with respect to the control dies **230** and **330**. Moreover, in certain embodiments, the memory packages **820** can include some or all of the embodiments described above with respect to the memory package **200** and **300**. In general, the memory module **812** may include one or more memory packages **820**.

In certain embodiments, each control die **822**, or isolation device, may be capable of address pass-through. Address pass-through, in some cases, enables the control die **822** to provide an address signal to one or more array dies **824** without decoding the address signal. This is possible, in some implementations, because the address signal received by the control die **822** is not encoded.

Some implementations of the control dies **822** include a plurality of command/address buffers (not shown). These buffers may comprise latches. In certain embodiments, the buffers are configured to hold command/address signals to control the timing of command/address signals. In some cases, controlling the timing of the command/address signals may reduce or slow signal degradation. In some implementations, the control dies **822** include a plurality of data buffers, which may control the timing of data signals to reduce or slow signal degradation. Further, the control dies **822** may include a data path control circuit (not shown) that is configured to control command/address time slots and data bus time slots. Controlling the command/address time slots and the data bus time slots enables the control dies **822** to reduce or prevent signal collisions caused by multiple memory packages **820** sharing the data path control lines **816** and the data bus **818**. In some implementations, the data path control circuit may be separate from the control die **822**.

Each of the control dies **822** may be configured to receive data signals from the memory control hub **802** via the data bus **818**. Further, the control dies **822** may provide data signals to the memory control hub **802** via the data bus **818**. The control dies **822** may also receive data path control signals and/or command/address signals from the register device **812** via the data path control lines **816**.

As illustrated in FIG. **8**, each memory package **820** may include one or more array dies **824** operatively coupled to the control die **822**. The array dies **824** may be configured to receive data signals from the control die **822**. As with the array dies **210** and **310**, the array dies **824** may include any type of Random Access Memory (RAM) die. For example, the array dies **824** may include DDR DRAM, SDRAM, flash memory, or SRAM, to name a few. Further, if the memory module **810** is utilized for graphics, the array dies **824** may include GDDR SDRAM or any other type of graphics memory. In addition, the array dies **824** may be configured in a stack arrangement as illustrated in FIG. **8**. Alternatively, the array dies **824** may be arranged in a planar configuration or a hybrid configuration utilizing both a planar and a stack arrangement.

In some embodiments, the memory module **810** is selectively configurable into two operational modes. In the first operational mode, the register device **812** generates data path control signals provided to the control dies **822** via the data path control lines **816**. The control dies **822** may decode command/address signals included with the data path control signals generated by the register device **812**. In some implementations, the control dies **822** use the data path control signals to operate the data path control circuits of the control dies **822**.

In the second operational mode, the control dies **822** may operate the data path control circuits to provide command/address signals to the array dies **824** without decoding the command/address signals. In this mode, the control dies **822** may use address pass-through to provide received address signals to the array dies **824**.

Other operational modes may also be possible. In some embodiments, the data path control signals generated by the register device **812** may include decoded command/address signals that are decoded from command/address signals received from the memory control hub **802** via the command/address bus **814**.

In some embodiments, the register device **812** may be configured to perform rank multiplication. In addition, or alternatively, the control dies **822** may be configured to perform rank multiplication. Embodiments of rank multiplication are described in greater detail in U.S. Pat. Nos. 7,289,386 and 7,532,537, each of which are incorporated in their entirety by reference herein. In such embodiments, the register device **812** can generate additional chip select signals that are provided to the array dies **824**. For instance, if the memory control hub **802** is configured to recognize a single array die **824** per memory package **820**, but there exists four array dies **824** per memory package **820**, the memory control hub **802** may not provide the correct number of chip select signals to access a specific memory location of the plurality of array dies **824** is memory package **820**. Thus, to access the specific memory location, the register device **812** can determine the array die that includes the specific memory location to be accessed based on the command/address signals received from the memory control hub **802** and can generate the correct chip select signal to access the array die that includes the specific memory location. In certain embodiments, when the memory module **810** is operating in the second operation module as described above, the memory module **810** does not perform rank multiplication.

Terminology

Unless the context clearly requires otherwise, throughout the description and the claims, the words "comprise," "comprising," and the like are to be construed in an inclusive sense, as opposed to an exclusive or exhaustive sense; that is to say, in the sense of "including, but not limited to." The term "coupled" is used to refer to the connection between two elements, the term refers to two or more elements that may be either directly connected, or connected by way of one or more intermediate elements. Additionally, the words "herein,"

"above," "below," and words of similar import, when used in this application, shall refer to this application as a whole and not to any particular portions of this application. Where the context permits, words in the above Detailed Description using the singular or plural number may also include the plural or singular number respectively. The word "or" in reference to a list of two or more items covers all of the following interpretations of the word: any of the items in the list, all of the items in the list, and any combination of the items in the list.

The above detailed description of embodiments of the invention is not intended to be exhaustive or to limit the invention to the precise form disclosed above. While specific embodiments of, and examples for, the invention are described above for illustrative purposes, various equivalent modifications are possible within the scope of the invention, as those skilled in the relevant art will recognize. For example, while processes or blocks are presented in a given order, alternative embodiments may perform routines having steps, or employ systems having blocks, in a different order, and some processes or blocks may be deleted, moved, added, subdivided, combined, and/or modified. Each of these processes or blocks may be implemented in a variety of different ways. Also, while processes or blocks are at times shown as being performed in series, these processes or blocks may instead be performed in parallel, or may be performed at different times.

The teachings of the invention provided herein can be applied to other systems, not necessarily the system described above. The elements and acts of the various embodiments described above can be combined to provide further embodiments.

Conditional language used herein, such as, among others, "can," "might," "may," "e.g.," and the like, unless specifically stated otherwise, or otherwise understood within the context as used, is generally intended to convey that certain embodiments include, while other embodiments do not include, certain features, elements and/or states. Thus, such conditional language is not generally intended to imply that features, elements and/or states are in any way required for one or more embodiments or that one or more embodiments necessarily include logic for deciding, with or without author input or prompting, whether these features, elements and/or states are included or are to be performed in any particular embodiment.

While certain embodiments of the inventions have been described, these embodiments have been presented by way of example only, and are not intended to limit the scope of the disclosure. Indeed, the novel methods and systems described herein may be embodied in a variety of other forms; furthermore, various omissions, substitutions and changes in the form of the methods and systems described herein may be made without departing from the spirit of the disclosure. The accompanying claims and their equivalents are intended to cover such forms or modifications as would fall within the scope and spirit of the disclosure.

What is claimed is:

1. A memory package, comprising:

a plurality of input/output terminals via which the memory package communicates data and control/address signals with one or more external devices;

a plurality of stacked array dies including a first group of array dies and a second group of at least one array die, each array die having data ports;

at least a first die interconnect and a second die interconnect, the first die interconnect in electrical communication with the first group of array dies and not in electrical communication with the second group of at least one array die, the second die interconnect in electrical communication with the second group of at least one array die and not in electrical communication with the first group of array dies; and

a control die comprising at least a first data conduit between the first die interconnect and a first terminal of the plurality of input/output terminals, and at least a second data conduit between the second die interconnect and the first terminal, the first terminal being a data terminal, the control die further comprising a control circuit to control respective states of the first data conduit and the second data conduit in response to control signals received via one or more second terminals of the plurality of terminals.

2. The memory package of claim **1**, wherein the control signals include data path control signals for controlling the first and second data conduits.

3. The memory package of claim **1**, wherein the control circuit is configured to generate data path control signals for controlling the first and second data conduits in response to the received control signals.

4. The memory package of claim **3**, wherein the control signals include command/address signals and wherein the control die is configured to provide the command/address signals to the plurality of stacked array dies.

5. The memory package of claim **1**, wherein the first die interconnect comprises a first through-silicon via and wherein the second die interconnect comprises a second through-silicon via.

6. The memory package of claim **1**, wherein the control die further comprises chip-select conduits, the memory package further comprising:

third die interconnects coupled between respective chip-select conduits and respective ones of the plurality of stacked array dies.

7. The memory package of claim **1**, wherein a first number of array dies in the first group of array dies and a second number of at least one array die in the second group of at least one array die are selected in consideration of a load of the first die interconnect and a load of the second die interconnect so as to reduce a difference between a first load on the first data conduit and a second load on the second data conduit, the first load including a load of the first die interconnect, and a load of the first group of array dies, and the second load including a load of the second die interconnect and a load of the second group of at least one array die.

8. The memory package of claim **1**, wherein the respective states of the first data conduit and the second data conduit are controlled by one or more data path control signals, wherein the control die is configurable to operate in any one of a first mode and a second mode, and wherein:

in the first mode, the control die receives the data path control signals from the one or more external devices; and

in the second mode, the control die generates the data path control signals from at least some of the control/address signals received from the one or more external devices.

9. The memory package of claim **1**, wherein the control die further comprises command/address conduits configured to provide corresponding command/address signals to the array dies, the command/address signals including at least one memory cell address.

10. The memory package of claim **1**, wherein the control die further comprises one or more additional conduits configured to provide one or more of a supply voltage signal and a ground signal to the array dies.

11. A memory package, comprising:

a plurality of input/output terminals via which the memory package communicates data and control/address signals with one or more external devices;

a plurality of array dies arranged in a stack, including a first group of array dies and a second group of at least one array die;

at least a first die interconnect and a second die interconnect, the first die interconnect in electrical communication with the first group of array dies and not in electrical communication with the second group of at least one array die, the second die interconnect in electrical communication with the second group of at least one array die and not in electrical communication with the first group of array dies; and

a control die comprising at least a first data conduit between the first die interconnect and a first terminal of the plurality of input/output terminals, at least a second data conduit between the second die interconnect and the first terminal, and chip select conduits for providing chip select signals to respective array dies;

wherein the control die further comprises a control circuit to control respective states of the first data conduit and the second data conduit to drive a data signal to an array die selected by at least one of the chip-select signals.

12. The memory package of claim 11, wherein the chip select conduits pass through the control die.

13. The memory package of claim 11, wherein the chip select conduits include drivers to drive the chip select signals to the respective array dies.

14. The memory package of claim 11, wherein the first die interconnect comprises one or more through silicon vias and wherein the second die interconnect comprises one or more through silicon vias.

15. The memory package of claim 11, wherein: the first data conduit comprises at least a first driver having a first driver size, and the second data conduit comprises at least a second driver having a second driver size, and wherein the first driver size and the second driver size are both less than a driver size sufficient to drive a signal along a die interconnect in electrical communication with each of the plurality of array dies without significant signal degradation.

16. The memory package of claim 11, wherein the control die is configured to generate the chip select signals from control signals received via second terminals of the plurality of terminals, and wherein the chip select signal is generated using an address signal in the control/address signals.

17. The memory package of claim 11, wherein the control circuit controls the respective states of the first data conduit and the second data conduit in response to at least some of the control/address signals received via second terminals of the plurality of terminals.

18. The memory package of claim 16, wherein the control/address signals comprise: at least one command signal, at least one address signal, and at least one data path control signal.

19. The memory package of claim 11, wherein the control die is configured to generate data path control signals from the control/address signals received via second terminals of the plurality of terminals, and wherein the control circuit controls the respective states of the first data conduit in response to the data path control signals.

20. A method for optimizing load in a memory package comprising a plurality of array dies arranged in a stack and including a first group of array dies and a second group of at least one array die, at least a first die interconnect and a second die interconnect, a control die, and a plurality of input/output terminals via which the memory package communicates data and control/address signals with one or more external devices, the method comprising:

receiving a data signal at a first terminal of the plurality of input/output terminals;

receiving control signals at second terminals of the plurality of input/output terminals;

providing chip select signals to respective array dies through the control die, the chip select signals being related to at least some of the control signals; and

selecting one of a first driver and a second driver in the control die to drive the data signal via a corresponding one of the first die interconnect and the second die interconnect to an array die selected by at least one of the chip select signals, the first die interconnect in electrical communication with the first group of array dies and not in electrical communication with the second group of at least one array die, the second die interconnect in electrical communication with the second group of at least one array die and not in electrical communication with the first group of array dies.

21. The method of claim 20, further comprising:

selecting a first driver size for the first driver based, at least in part, on a load on the first driver; and

selecting a second driver size for the second driver based, at least in part, on a load on the second driver.

22. The method of claim 21, wherein the first driver size and the second driver size are both less than a driver size sufficient to drive a signal along a die interconnect in electrical communication with each of the plurality of array dies without significant signal degradation.

23. The method of claim 20, further comprising generating the chip select signals from at least some of the control signals.

24. The method of claim 20, wherein the control signals include the chip-select signals.

25. The method of claim 20, wherein the first and second die interconnects each comprises at least one through silicon vias.

26. The method of claim 20, wherein the chip select signals pass through through-silicon-vias in the control die.

27. The method of claim 20, further comprising generating data path control signals from at least some of the control signals, the data path control signals being used to select the one of the first driver and the second driver in the control die to drive the data signal.

28. The method of claim 20, wherein the one of the first driver and the second driver is selected using at least some of the control signals.

29. A memory module operable via a memory control hub, comprising:

a register device configured to receive command/address signals from the memory control hub and to generate control signals; and

a plurality of DRAM packages, each DRAM package comprising:

a plurality of data terminals via which the DRAM package communicates data with the memory control hub, and a plurality of control terminals to receive the control signals;

a plurality of array dies arranged in a stack, including a first group of array dies and a second group of at least one array die;

at least a first die interconnect and a second die interconnect, the first die interconnect in electrical communication with the first group of array dies and not in electrical communication with the second group of at least one

array die, the second die interconnect in electrical communication with the second group of at least one array die and not in electrical communication with the first group of array dies; and

a control die comprising at least a first data conduit between the first die interconnect and a first data terminal of the plurality of data terminals, at least a second data conduit between the second die interconnect and the first data terminal, and chip select conduits for providing chip select signals to respective array dies, the chip select signals being related to at least some of the control signals;

wherein the control die further comprises a control circuit to control respective states of the first data conduit and the second data conduit to drive a data signal to an array die selected by at least one of the chip-select signals.

30. The memory module of claim **29**, wherein the register device is further configured to perform rank multiplication by generating the chip select signals, and wherein the control signals include the chip select signals.

31. The memory module of claim **29**, wherein the control signals include data path control signals generated by the register device, the data path control signals being used to control the respective states of the first data conduit and the second data conduit.

32. The memory module of claim **29**, wherein the control die is further configured to perform rank multiplication by generating the chip select signals from at least some of the control signals that include at least one address signal.

33. The memory module of claim **29**, wherein the control signals include command/address signals, and the control die is configured to hold the command/address signals to control timing of the command/address signals.

34. The memory module of claim **29**, wherein the control die is configured to generate data path control signals from at least some of the control signals, the data path control signals being used to control the respective states of the first data conduit and the second data conduit.

* * * * *