UNITED STATES COURT OF APPEALS
FOR THE FEDERAL CIRCUIT
717 MADISON PLACE, N.W.
WASHINGTON, D.C. 20439

JARRETT B. PERLOW
CLERK OF COURT

CLERK'S OFFICE
202-275-8000

August 20, 2024

NOTICE OF DOCKETING

Federal Circuit Docket No.: 2024-2240

Federal Circuit Short Caption: Netlist, Inc. v. Samsung Electronics Co., Ltd.

Date of Docketing: August 20, 2024

Originating Tribunal: United States Patent and Trademark Office

Originating Case No.: IPR2022-01427

Appellant: Netlist, Inc.

A petition for review has been filed and assigned the above Federal Circuit case number. The court's official caption is included as an attachment to this notice. Unless otherwise noted in the court's rules, the assigned docket number and official caption or short caption must be included on all documents filed with this Court. It is the responsibility of all parties to review the Rules for critical due dates. The assigned deputy clerk is noted below and all case questions should be directed to the Case Management section at (202) 275-8055.

CERTIFIED LIST: The agency or arbitrator is directed to forward the certified list as promptly as possible but no later than 40 days from the date of this notice.

The following filings are due within 14 days of this notice:

- Entry of Appearance or Notice of Unrepresented Person. (Fed. Cir. R. 47.3.)
- Certificate of Interest. (Fed. Cir. R. 47.4; not required for unrepresented and federal government parties unless disclosing information under Fed. Cir. R. 47.4(a)(6))
- Docketing Statement. Note: The Docketing Statement is due in 30 days if the United States or its officer or agency is a party in the appeal. (Fed. Cir. R. 47.6 and the Mediation Guidelines; no docketing statement is required in cases with an unrepresented party)

- Statement Concerning Discrimination in MSPB or arbitrator cases. (Fed. Cir. R. 15(c); completed by petitioner only)
- Fee payment or appropriate fee waiver request, if the docketing fee was not prepaid (see Fee Payment below).

FILING DOCUMENTS: Each counsel representing a party must be a member of the court's bar and registered for the court's electronic filing system. Parties represented by counsel must make all filings through the court's electronic filing system.

Unrepresented parties may choose to submit case filings to the court either in paper or through the court's electronic filing system; electronic filing will only be permitted for unrepresented parties after successful registration for the court's electronic filing system and submission of a completed Notice of Unrepresented Person Appearance. Fed. Cir. R. 25(a). The court's Electronic Filing Procedures may be accessed at www.cafc.uscourts.gov/contact/clerks-office/filing-resources.

CONTACT INFORMATION: Electronic filers, or unrepresented parties registered to receive electronic service, must update their contact information in their PACER service center profile whenever their contact information changes. Counsel must file an amended Entry of Appearance and unrepresented parties must file an amended Notice of Unrepresented Person Appearance whenever contact information changes. Fed. Cir. R. 25(a)(5).

FEE PAYMENT: Unless the filing fee was prepaid, fee payment must be submitted within fourteen days after this notice. Fed. Cir. R. 52(d). For outstanding docketing fees due to this court, electronic filers must pay the fee using the event Pay Docketing Fee through the court's electronic filing system. Fed. Cir. R. 52(e). Docketing fees due to other courts, such as U.S. District Courts, the U.S. Court of Appeals for Veterans Claims, and non-vaccine cases at the U.S. Court of Federal Claims, must be submitted to those courts in accordance with their procedures. A filer wishing to proceed without fee payment must submit a motion for leave to proceed in forma pauperis, or other fee waiver request, within fourteen days.

OFFICIAL CAPTION: The court's official caption is attached and reflects the lower tribunal's caption pursuant to Fed. R. App. P. 12(a), 15(a), and 21(a). Please review the caption carefully and promptly advise this court in writing of any improper or inaccurate designations.

Jarrett B. Perlow
Clerk of Court

By: I. Hammer, Deputy Clerk

Attachments:

- Official caption
- Paper Copies of General Information and Forms (to unrepresented parties only):
  - General Information and Overview of a Case in the Federal Circuit
  - Notice of Unrepresented Person Appearance
  - Informal Brief
  - Informal Reply Brief (to be completed only after receiving the opposing party's response brief)
  - Motion and Affidavit for Leave to Proceed in Forma Pauperis (only to filers owing the docketing fee)
  - Supplemental in Forma Pauperis Form for Prisoners (only to filers in a correctional institution)
  - Statement Concerning Discrimination (only to petitioners in MSPB or arbitrator case)

cc: United States Patent and Trademark Office

Official Caption

NETLIST, INC.,
Appellant

v.

SAMSUNG ELECTRONICS CO., LTD., MICRON TECHNOLOGY, INC., MICRON SEMICONDUCTOR PRODUCTS, INC., MICRON TECHNOLOGY TEXAS, LLC,
Appellees

Short Caption

Netlist, Inc. v. Samsung Electronics Co., Ltd.

FORM 5. Petition for Review/Notice of Appeal of an Order or Decision of an Agency, Board, Commission, Office, Bureau, or the US Court of Federal Claims (vaccine appeals only)) **Form 5 March 2023**

UNITED STATES COURT OF APPEALS FOR THE FEDERAL CIRCUIT

PETITION FOR REVIEW/NOTICE OF APPEAL

Notice is hereby given that the petitioner(s)/appellant(s) listed below hereby appeal(s) the below-noted case to the United States Court of Appeals for the Federal Circuit.

Originating Tribunal *(Name of Agency, Board, Commission, Office, Bureau, or Court whose decision is being appealed)*: Patent Trial and Appeal Board

Case number being appealed: IPR2022-01427

Case title being appealed: Samsung Electronics Co., Ltd. et al. v. Netlist, Inc.

Date of final decision or order being appealed: 04/01/24 & 06/17/24

Date decision or order was received: 04/01/24 & 06/17/24

☒ I have attached a copy of the decision or order being appealed.

List all Petitioners/Appellants (List each party filing this appeal. Do not use "et al." or other abbreviations. Attach continuation pages if necessary.)

Netlist, Inc.

Date: 08/19/2024

Signature: /s/ Hong Zhong

Name: Hong Annita Zhong

Address: Irell & Manella LLP

1800 Avenue of the Stars, Ste. 900

Los Angeles, CA 90067

Phone Number: 310 277-1010

Email Address: hzhong@irell.com

UNITED STATES PATENT AND TRADEMARK OFFICE

BEFORE THE PATENT TRIAL AND APPEAL BOARD

SAMSUNG ELECTRONICS CO., LTD., MICRON TECHNOLOGY, INC., MICRON SEMICONDUCTOR PRODUCTS, INC., and MICRON TECHNOLOGY TEXAS LLC,[1]

Petitioners,

v.

NETLIST, INC.,

Patent Owner.

Case No. IPR2022-01427
Patent No. 9,318,160

PATENT OWNER NETLIST, INC.'S NOTICE OF APPEAL

[1] Micron Technology, Inc., Micron Semiconductor Products, Inc., and Micron Technology Texas, LLC, filed a motion and joinder and a petition in IPR2023-00883 and have been joined as petitioners in this proceeding.

11350147

Pursuant to 35 U.S.C. §§ 141, 142, and 319, and in accordance with 37 C.F.R. §§ 90.2-90.3, Patent Owner Netlist, Inc. ("Netlist") appeals to the United States Court of Appeals for the Federal Circuit from the Final Written Decision of the Patent Trial and Appeal Board ("Board") entered on April 1, 2024 in IPR2022-01427 (Paper No. 48) ("Final Written Decision"), attached as Exhibit A; the Order denying Director Review of the Final Written Decision dated June 17, 2024 (Paper 52) ("Decision on Director Review Request"), attached as Exhibit B; and from all underlying findings, determinations, rulings, opinions, orders, and decisions regarding the *inter partes* review (Case IPR2022-01427) of U.S. Patent No. 9,318,160 (the "'160 Patent").

In accordance with 37 C.F.R. § 90.2(a)(3)(ii), Netlist states that the issues on appeal include, but are not limited to: the Board's determination that Claims 1 through 20 of the '160 Patent have been shown by a preponderance of the evidence to be unpatentable; the Board's construction of the challenged claims and application of its construction of the claims to the facts of record; the Board's procedural rulings, including its rulings regarding the adequate and timely preservation of certain of the parties' arguments and denial of submission of supplemental evidence that came into being after the sur-reply; the adequacy of the Board's consideration of the expert testimony, prior art, and other evidence in the record, including, but not limited to, evidence and testimony from related district court proceedings between Petitioner

and Patent Owner; the Board's factual findings, conclusions of law, or other determinations supporting or related to those issues (such as motivation to combine or reasonable expectation of success); the Board's compliance with the Administrative Procedure Act, including whether the Final Written Decision, denial of Director Review and the denial of Netlist's request for submitting supplemental evidence are arbitrary, capricious, an abuse of discretion, not in accordance with law, or in excess of the Board's jurisdiction, and any procedural irregularities associated with the review proceeding; as well as all other issues decided adversely to Netlist in any orders, decisions, rulings, and opinions.

This Notice of Appeal is being e-filed with the Clerk's Office for the United States Court of Appeals for the Federal Circuit, along with payment of the required docketing fees. In addition, a copy of this Notice of Appeal is being filed simultaneously with the Patent Trial and Appeal Board and filed by e-mail to the Director of the United States Patent and Trademark Office at efileSO@uspto.gov.

Case IPR2022-01427
Patent No. 9,318,160

Dated: August 19, 2024

Respectfully submitted,

/*Hong Zhong*/

H. Annita Zhong (Reg. No. 66,530)
Jason Sheasby (*pro hac vice*)
IRELL & MANELLA LLP
1800 Avenue of the Stars, Suite 900
Los Angeles, CA 90067
Tel: (310) 277-1010
Fax: (310) 203-7199
HZhong@irell.com
JSheasby@irell.com

Blair A. Silver (Reg. No. 68,003)
IRELL & MANELLA LLP
750 17th Street NW, Ste. 850
Washington, DC 20006
Tel: (202) 777-6500
bsilver@irell.com

CERTIFICATE OF SERVICE

Pursuant to 37 C.F.R. § 42.6, the undersigned certifies that on August 19, 2024, a copy of the foregoing **PATENT OWNER'S NOTICE OF APPEAL** was served by electronic mail, as agreed to by the parties, upon the following:

BAKER BOTTS L.L.P.
Eliot D. Williams, Reg. No. 50,822
Theodore W. Chandler, Reg. No. 50,319
Ferenc Pazmandi, Reg. No. 66,216
Michael E. Knierim, Reg. No. 78,268
Brianna L. Potter, Reg. No. 76,748
DLSamsungNetlistIPRs@BakerBotts.com

WINSTON & STRAWN LLP
Matthew A. Hopkins, Reg. No. 76,273
mhopkins@winston.com
Michael R. Rueckheim, *pro hac vice*
mrueckheim@winston.com
David Lin
Winston-IPR-Netlist@winston.com

I also certify that in addition to being filed electronically with the Board, a copy of this Notice of Appeal was filed on August 19, 2024, for delivery to the Director of the United States Patent and Trademark Office at the following e-mail address: efileSO@uspto.gov.

I further certify that a copy of the foregoing Notice of Appeal is being filed via CM/ECF on August 19, 2024, with the United States Court of Appeals for the Federal Circuit.

/Susan M. Langworthy/
Susan M. Langworthy

EXHIBIT A

Trials@uspto.gov
571-272-7822

Paper 48
Entered: April 1, 2024

UNITED STATES PATENT AND TRADEMARK OFFICE

BEFORE THE PATENT TRIAL AND APPEAL BOARD

SAMSUNG ELECTRONICS CO., LTD, MICRON TECHNOLOGY, INC.,
MICRON SEMICONDUCTOR PRODUCTS, INC., and
MICRON TECHNOLOGY TEXAS LLC,[1]
Petitioner,

v.

NETLIST, INC.,
Patent Owner.

IPR2022-01427
Patent 9,318,160 B2

Before JON M. JURGOVAN, DANIEL J. GALLIGAN, and
SHEILA F. McSHANE, *Administrative Patent Judges*.

GALLIGAN, *Administrative Patent Judge*.

JUDGMENT
Final Written Decision
Determining All Challenged Claims Unpatentable
Dismissing Petitioner's Motion to Exclude
35 U.S.C. § 318(a)

---

[1] Micron Technology, Inc., Micron Semiconductor Products, Inc., and Micron Technology Texas LLC filed a motion for joinder and a petition in IPR2023-00883 and have been joined as petitioners to this proceeding.

I. INTRODUCTION

In this *inter partes* review, Samsung Electronics Co., Ltd. ("Samsung"), Micron Technology, Inc., Micron Semiconductor Products, Inc., and Micron Technology Texas LLC (collectively "Petitioner") challenge the patentability of claims 1–20 of U.S. Patent No. 9,318,160 B2 ("the '160 patent," Ex. 1001), which is assigned to Netlist, Inc. ("Patent Owner").

We have jurisdiction under 35 U.S.C. § 6. This Final Written Decision, issued pursuant to 35 U.S.C. § 318(a), addresses issues and arguments raised during the trial in this *inter partes* review. For the reasons discussed below, we determine that Petitioner has proven by a preponderance of the evidence that claims 1–20 of the '160 patent are unpatentable. *See* 35 U.S.C. § 316(e) (2018) ("In an inter partes review instituted under this chapter, the petitioner shall have the burden of proving a proposition of unpatentability by a preponderance of the evidence.").

A. Procedural History

Samsung filed a Petition (Paper 1, "Pet.") challenging claims 1–20 of the '160 patent on the following grounds:

Claims Challenged	35 U.S.C. §	References/Basis
1–20	103(a)[2]	Kim,[3] Rajan,[4] Wyman[5]

[2] The Leahy-Smith America Invents Act ("AIA"), Pub. L. No. 112-29, 125 Stat. 284, 287–88 (2011), amended 35 U.S.C. § 103 effective March 16, 2013. Petitioner applies the pre-AIA version of § 103 based on an effective filing date before March 16, 2013. Pet. 3–4.
[3] US 2011/0103156 A1, published May 5, 2011 (Ex. 1014).
[4] US 8,041,881 B2, issued Oct. 18, 2011 (Ex. 1015).
[5] US 7,969,192 B2, issued June 28, 2011 (Ex. 1017).

Claims Challenged	35 U.S.C. §	References/Basis
1–20	103(a)	Riho,[6] Rajan, Riho2[7]

Pet. 3. Patent Owner filed a Preliminary Response. Paper 6. With Board authorization (Ex. 3001), Samsung filed a preliminary reply (Paper 9) to the Preliminary Response, and Patent Owner filed a preliminary sur-reply (Paper 10). Trial was instituted on the asserted grounds of unpatentability. Paper 13 ("Inst. Dec.") at 28.

During the trial, Patent Owner filed a Response (Paper 20, "PO Resp."), and Samsung filed a Reply (Paper 24, "Pet. Reply"). After Samsung's Reply, Micron Technology, Inc., Micron Semiconductor Products, Inc., and Micron Technology Texas LLC were joined as petitioners to this proceeding based on a petition and a motion for joinder in IPR2023-00883. Paper 25. After this joinder, Patent Owner filed a Sur-reply (Paper 28, "PO Sur-reply").

Petitioner filed a motion to exclude certain evidence. Paper 34. Patent Owner opposed the motion (Paper 35), and Petitioner filed a reply in support of the motion (Paper 36).

An oral hearing was held on January 11, 2024, a transcript of which appears in the record. Paper 46 ("Tr.").

Petitioner relies on testimony from Andrew Wolfe, Ph.D. Ex. 1003. Patent Owner relies on testimony from Michael C. Brogioli, Ph.D. Ex. 2023. The parties have entered in the record transcripts of the depositions of these declarants. Exs. 2025 (Wolfe Deposition), 1052 (Brogioli Deposition).

---

[6] US 2011/0026293 A1, published Feb. 3, 2011 (Ex. 1016).
[7] US 2010/0195364 A1, published Aug. 5, 2010 (Ex. 1018).

B. Real Parties in Interest

The identified real parties in interest on the petitioner side are the following: Samsung, Samsung Semiconductor, Inc., Micron Technology, Inc., Micron Semiconductor Products, Inc., and Micron Technology Texas LLC. Pet. 1; IPR2023-00883, Paper 2 at 1.

Patent Owner identifies itself as the real party in interest. Paper 3 at 1.

C. Related Matters

As required by 37 C.F.R. § 42.8(b)(2), the parties identify various related matters. Pet. 1; Paper 3 at 1; IPR2023-00883, Paper 2 at 1. We are issuing concurrently a final decision in IPR2022-01428 involving related U.S. Patent 8,787,060 No. B2 ("the '060 patent").

D. The '160 Patent and Illustrative Claim

The '160 patent relates to computer memory devices and, more specifically, to reducing the load of drivers in memory. Ex. 1001, 1:20–24. As background, the '160 patent describes an existing memory package with reference to Figure 1A, reproduced at right, which shows memory package 100 with control die 130 and three array dies 110. Ex. 1001, 1:32–46. Control die 130 has driver 134, which drives data signals from control die 130 to each array die via interconnect 142, and driver 140, which drives command and address signals to each array die. Ex. 1001, 1:37–44.

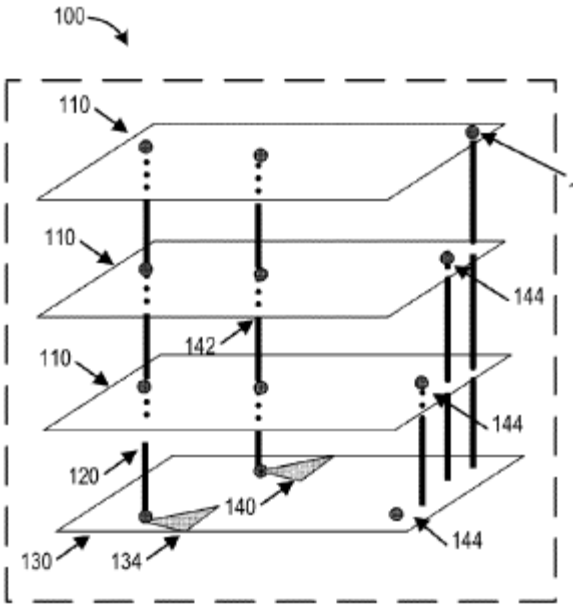

FIG. 1A

The '160 patent explains that "a load exists on each of the drivers 134,

140 . . . by virtue of the drivers being in electrical communication with the corresponding die interconnects and the corresponding circuitry of the array dies." Ex. 1001, 2:10–13. The '160 patent discloses that, "to drive a signal along a die interconnect, a driver typically must be large enough to overcome the load on the driver" and that "a larger driver not only consumes more space on the control die, but also consumes more power." Ex. 1001, 2:13–17.

The '160 patent states that driver size and power consumption can be reduced "by increasing the number of die interconnects and reducing the number of array dies that are in electrical communication with each die interconnect." Ex. 1001, 4:25–29. The '160 patent illustrates an exemplary configuration in Figure 2, reproduced at right, which shows memory package 200 with control die 230 and four array dies 210a–210d. Ex. 1001, 5:15–16. Control die 230 is connected to array dies 210a and 210b by die interconnect 220a, as shown by the darkened circles. Ex. 1001, 5:66–6:4. Die interconnect 220b connects control die 230 to array dies 210c and 210d, as shown by the darkened circles, but die interconnect 220b is not electrically connected to array dies 210a and 210b, as shown by

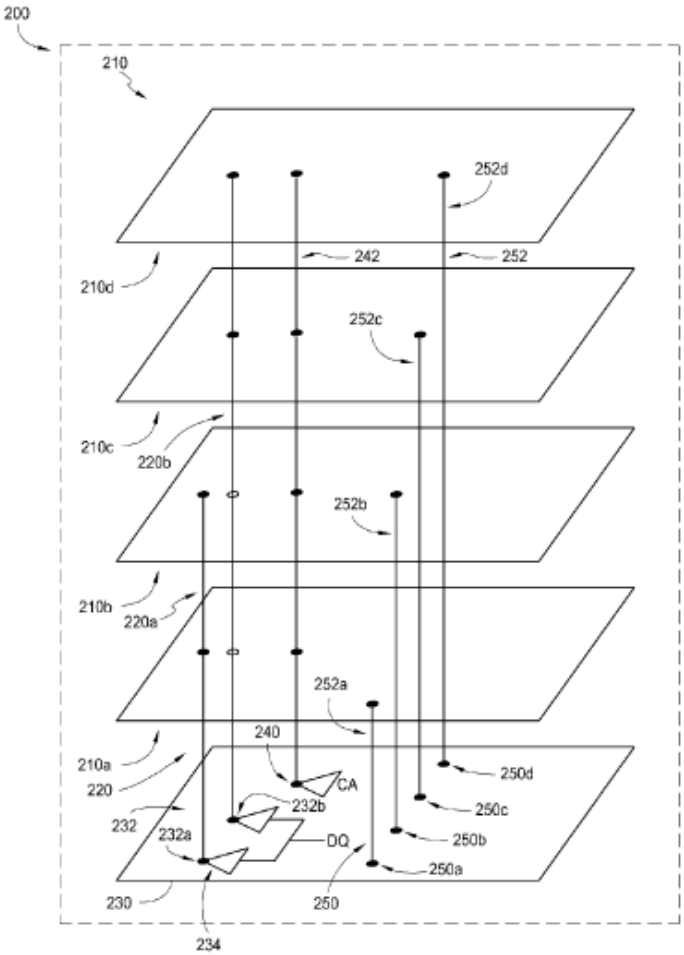

FIG. 2

the unfilled circles. Ex. 1001, 6:12–26. The '160 patent also states that "[e]xamples of die interconnects include, but are not limited to, through-silicon vias (TSV), conducting rods, wire bonds, and pins." Ex. 1001, 5:54–56.

Claim 1 is illustrative and is reproduced below with Petitioner's claim element identifiers in brackets.

1. [1.a] A memory package, comprising:

   [1.b] data terminals and control terminals;

   [1.c] stacked array dies including a first group of array dies and a second group of at least one array die;

   [1.d.1] first die interconnects and second die interconnects, the first die interconnects in electrical communication with the first group of array dies and not in electrical communication with the second group of at least one array die, [1.d.2] the second die interconnects in electrical communication with the second group of at least one array die and not in electrical communication with the first group of array dies; and

   [1.e.1] a control die comprising [1.e.2] first data conduits between the first die interconnects and the data terminals, and [1.e.3] second data conduits between the second die interconnects and the data terminals, [1.e.4] the first data conduit including first drivers each having a first driver size and configured to drive a data signal from a corresponding data terminal to the first group of array dies, [1.e.5] the second data conduit including second drivers each having a second driver size and configured to drive a data signal from a corresponding data terminal to the second group of at least one array die, the second driver size being different from the first driver size.

II. ANALYSIS

A. Principles of Law

A patent claim is unpatentable under 35 U.S.C. § 103(a) if the differences between the claimed subject matter and the prior art are such that the subject matter, as a whole, would have been obvious at the time the invention was made to a person having ordinary skill in the art to which said subject matter pertains. *KSR Int'l Co. v. Teleflex Inc.*, 550 U.S. 398, 406 (2007). The question of obviousness is resolved on the basis of underlying factual determinations including (1) the scope and content of the prior art; (2) any differences between the claimed subject matter and the prior art; (3) the level of ordinary skill in the art; and (4) any secondary considerations, if in evidence. *Graham v. John Deere Co. of Kan. City*, 383 U.S. 1, 17–18 (1966).

B. Level of Ordinary Skill in the Art

Citing the testimony of its declarant, Dr. Wolfe, Petitioner contends that a person of ordinary skill in the art "would have had an advanced degree in electrical or computer engineering, or a related field, and two years working or studying in the field of design or development of memory systems, or a bachelor's degree in such engineering disciplines and at least three years working in the field." Pet. 5 (citing Ex. 1003 ¶ 60). Petitioner also asserts that "[a]dditional training can substitute for educational or research experience, and vice versa," and Petitioner identifies particular technology with which a person of ordinary skill in the art would have been familiar, including JEDEC (Joint Electron Devices Engineering Council) industry standards, DRAM (dynamic random access memory) and SDRAM

(synchronous DRAM) memory modules, and "the structure and operation of circuitry used in stacked memory devices." Pet. 5 (citing Ex. 1003 ¶ 60).

Patent Owner states that, "[f]or purposes of this proceeding, Patent Owner applies the education and work-experience level specified on Petition, page 5." PO Resp. 6. Patent Owner then contends that "Petitioner does not allege that a [person of ordinary skill in the art] would have been familiar with designs and operations of non-DRAM devices or non-JEDEC specifications." PO Resp. 6. Patent Owner contends, therefore, that "under Petitioner's unpatentability theories" involving non-DRAM devices, persons of ordinary skill in the art "would be engaged in the project of making changes to memory devices that they have no experience with." PO Resp. 6 (citing Ex. 2023 ¶ 30).

We do not agree with Patent Owner's assertions regarding non-DRAM devices. The obviousness inquiry under 35 U.S.C. § 103(a) requires us to determine

> if the differences between the subject matter sought to be patented and the prior art are such that the subject matter as a whole would have been obvious at the time the invention was made to a person having ordinary skill in the art to which said subject matter pertains.

As Patent Owner confirmed during oral argument, the term "array dies" in the claims encompasses non-DRAMs. Tr. 53:4–7. Because the subject matter pertains to configurations involving non-DRAM devices, the "person having ordinary skill in the art," by definition under the statute, would have had knowledge of non-DRAM devices. To the extent Petitioner's proposed skill level, on which the parties agree, does not make that clear, we do.

Thus, we accept the uncontested assessment offered by Petitioner with the exception of the qualifier "at least," which introduces vagueness as to the

amount of experience. We also determine that a person of ordinary skill in the art would have been familiar with designs and operations of non-DRAM devices for the reasons discussed above.

C. Claim Construction

We interpret claim terms using "the same claim construction standard that would be used to construe the claim in a civil action under 35 U.S.C. 282(b)." 37 C.F.R. § 42.100(b).

1. Array Die

The challenged claims recite the term "array dies." In related litigation, a district court construed this term based on the following argument made by the applicant during prosecution of the '060 patent regarding U.S. Patent Application Publication No. 2008/0025137 A1 (Ex. 1011 ("Rajan137")): "Rajan[137] does not disclose 'a plurality of stacked array dies.' Rajan[137] merely stacks DRAM circuits 206A–D, which are different from array dies." Ex. 2004, 31–32 (quoting Ex. 1002 ('060 patent prosecution history), 465 (January 13, 2014 Amendment at 10)). The district court found that Patent Owner "did not explain the structural difference between array dies and DRAM circuits, or even how they might be stacked differently" but, nonetheless, found that Patent Owner "*structurally* distinguished 'stacked DRAM circuits' from 'stacked array dies' to obtain the patent." Ex. 2004, 32. Based on this prosecution history, the district court adopted the defendants' proposed construction that "array die" means "array die that is different from a DRAM circuit." Ex. 2004, 32. Samsung is a defendant in that litigation.

Patent Owner argues that it "agreed to be bound by this construction and proceeded with the jury trial on that construction." PO Resp. 17 (citing

Exs. 2010, 2011). Yet, during the trial in this proceeding, Patent Owner qualifies the district court's construction to suggest that the term "array dies" means dies that are different from a particular kind of DRAM circuit. *See, e.g.*, PO Resp. 47 ("[T]he Petition contains no analysis on how or why Kim's memory chips are different from Rajan137's DRAM circuits."); *see also* Inst. Dec. 10–11 (addressing similar pre-institution arguments); Tr. 58:11–15 (Patent Owner's counsel's assertion that Rajan137 "describes, for instance, monolithic memory circuits may take the form of, and then it lists an example. And it lists DRAM as an example of a monolithic memory circuit. So, we take DRAM circuit to be a monolithic memory circuit that holds state while powered."). The district court's construction, which Patent Owner asserts it adopted, does not contain any such qualification.

In our analysis below, we apply the district court's construction, and we find that the combination of Kim, Rajan, and Wyman teaches array dies that are not DRAMs and, therefore, are "different from a DRAM circuit." Therefore, we need not address any further qualifications of the district court's construction or construe the term "DRAM circuit" to determine what Patent Owner actually disclaimed, if anything. *See Omega Eng'g, Inc. v. Raytek Corp.*, 334 F.3d 1314, 1324 (Fed. Cir. 2003) ("[P]rosecution disclaimer promotes the public notice function of the intrinsic evidence and protects the public's reliance on definitive statements made during prosecution."); *see also Genuine Enabling Tech. LLC v. Nintendo Co.*, 29 F.4th 1365, 1374 (Fed. Cir. 2022) ("If the challenged statements are ambiguous or amenable to multiple reasonable interpretations, prosecution disclaimer is not established."). Based on our findings as to non-DRAM

dies, we also need not determine whether the term "array die" should be construed to also encompass DRAM circuits.

2. Chip Select

Claims 15 and 16 recite "first chip select signals" and "second chip select signals." Patent Owner argues that the district court construed the term "chip select signals" to "exclude[] situations in which a chip select signal could enable multiple array dies at once" and contends that we should adopt this construction. PO Resp. 18 (citing Ex. 2004, 33–34). The district court's construction is actually for the "chip select signal" term recited in various claims of the '060 patent. Ex. 2004, 33–34, 36. As explained in the Institution Decision, we agree with this interpretation as applied to the "second chip select signals" term of claims 15 and 16 of the '160 patent because these claims recite "the second chip select signals having a number of chip select signals greater than the first chip select signals and *equal to a number of array dies in the plurality of array dies*" (emphasis added). *See* Inst. Dec. 11–12. Claims 15 and 16 recite that there are fewer "first chip selection signals" than "second chip selection signals," and, therefore, each of the "first chip selection signals" appears to apply to multiple array dies, which makes sense in the context of the "rank multiplication" of claims 15 and 16. *See* Inst. Dec. 12.

We apply this interpretation of the claim language below in addressing the patentability of claims 15 and 16.

3. Group of Array Dies

Petitioner argues that the phrase "a first group of array dies," which is recited in the independent claims, can be just one die. Pet. Reply 8–9; *see also* Pet. 40 (arguing that multiple chips would have been obvious "[i]nsofar

as one might argue that 'first group of array dies' requires multiple slave chips coupled to" one through-silicon via (TSV)).[8] Patent Owner disagrees and asserts that the first group must have plural dies. PO Resp. 20. We need not resolve this dispute because, as explained below in § II.D.2.d, we find persuasive Petitioner's contentions that the combination of Kim, Rajan, and Wyman teaches a first group that has multiple array dies.

4. Driver Size

Various claims recite the term "driver size." Neither party argues for an express construction of this term, but Patent Owner notes that a district court in related litigation construed "driver size" as "driver physical size." PO Sur-reply 18; *see* Ex. 1066 (district court claim construction order), 13, 43. As explained below in § II.D.2.e, we find that the combination of Kim, Rajan, and Wyman teaches the subject matter under this construction, and we need not address the construction of this term further.

5. Remaining Terms

We determine that no other terms or phrases require express construction. *See Realtime Data, LLC v. Iancu*, 912 F.3d 1368, 1375 (Fed. Cir. 2019) ("The Board is required to construe 'only those terms . . . that are in controversy, and only to the extent necessary to resolve the controversy.'" (quoting *Vivid Techs., Inc. v. Am. Sci. & Eng'g, Inc.*, 200 F.3d 795, 803 (Fed. Cir. 1999))).

[8] We omit the emphasis added by Petitioner for reference names and claim language when quoting Petitioner's arguments.

D. Obviousness over Kim, Rajan, and Wyman (Claims 1–20)

Petitioner asserts that claims 1–20 are unpatentable as obvious over the combined teachings of Kim, Rajan, and Wyman. Pet. 3, 23–80. Patent Owner opposes. PO Resp. 20–53; PO Sur-reply 1–20.

1. Overview of the Prior Art

Kim discloses a semiconductor memory apparatus including stacked chips, as depicted in Figure 5 below.

FIG.5

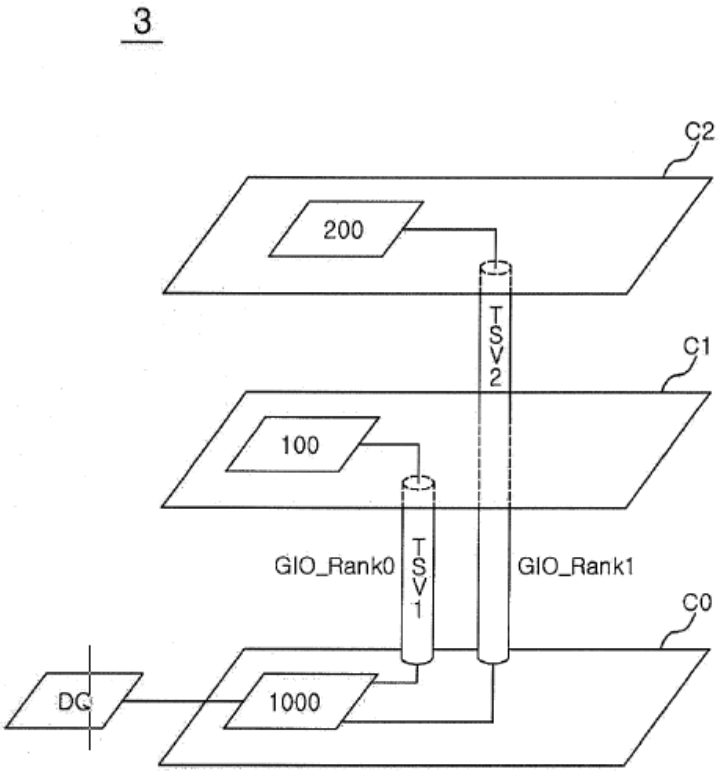

Kim's Figure 5 above shows a memory including a plurality of stacked chips, including main chip C0 and first and second slave chips C1 and C2, connected by through-silicon vias (TSVs). Ex. 1014 ¶¶ 47–48.

Rajan discloses using an interface circuit to emulate characteristics of particular memory even though the physical memory may not have those

characteristics, which allows the "use of low cost memory chips in manufacturing high capacity memory modules." Ex. 1015, 1:51–54, 3:24–43. Rajan explains that the interface circuit may comply with JEDEC standards. Ex. 1015, 4:20–24.

Wyman discloses, among other things, that longer inter-chip connections in a chip stack may require more drive strength than shorter connections. Ex. 1017, 6:24–28.

We discuss additional pertinent details of the references below.

2. Claim 1

a) Overview of Petitioner's contentions for claim 1

To illustrate its contentions based on Kim, Petitioner provides the following annotated version of Kim's Figure 5:

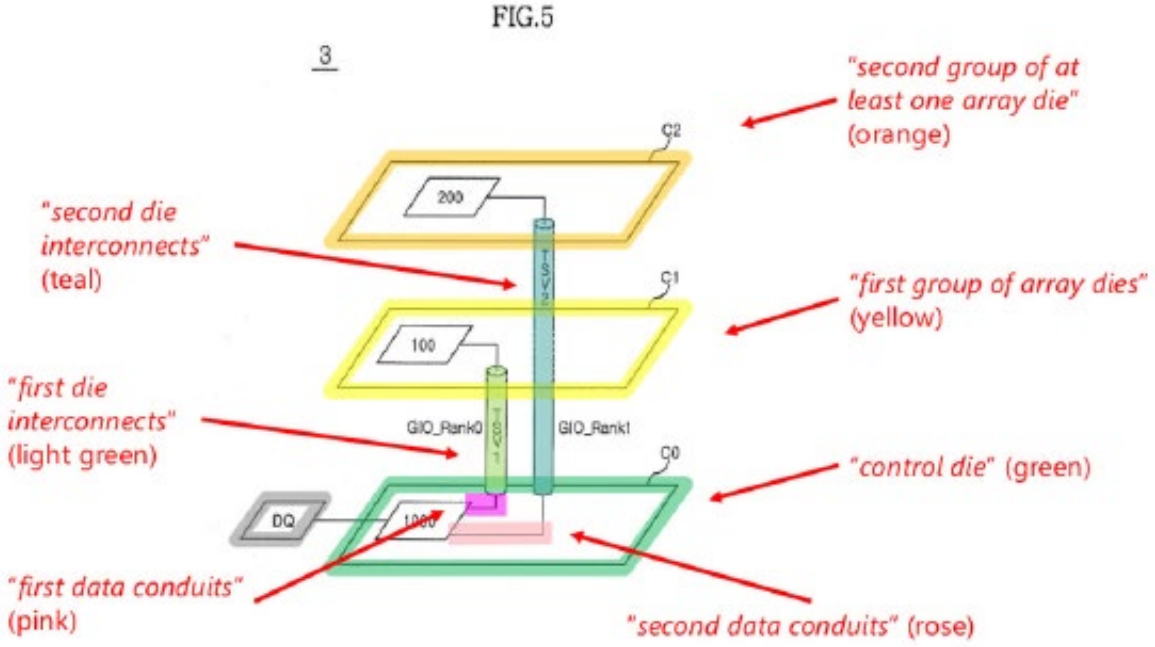

Pet. 34. In the annotated figure above, Petitioner maps depicted components to elements of claim 1 as follows: chip C1 (yellow) as "first group of array dies"; chip C2 (orange) as "second ground of at least one array die"; chip C0 (green) as "control die"; TSV1 (light green) from C0 to C1 as "first die

interconnects"; TSV2 (teal) from C0 to C2 as "second die interconnects"; box labeled "DQ" (gray) as "data terminals"; line (pink) from data input/output section 1000 to TSV1 as "first data conduits"; and line (rose) from data input/output section 1000 to TSV2 as "second data conduits." Pet. 34–53.

Petitioner argues that a person of ordinary skill in the art would have been motivated to make Kim's memory package compatible with JEDEC standards based on Rajan's teachings. Pet. 26–29. Petitioner also argues that a person of ordinary skill in the art would have been motivated to have multiple memory chips share a TSV because this was a known option and "would not require creating new TSVs (which would add space and circuitry) and would allow emulating the JEDEC standard required by external devices." Pet. 30–31. Petitioner relies on Wyman to teach using different driver sizes depending on load. Pet. 32–33.

b) Preamble (1.a)

Petitioner argues that Kim's Figure 5 depicts a "memory package," as recited in the preamble. Pet. 35 (citing Ex. 1014 ¶¶ 46–47; Ex. 1003 ¶¶ 174–179). Patent Owner does not dispute this contention. We agree with Petitioner, and we find, that Kim's disclosure of semiconductor memory apparatus 3 in Figure 5 teaches a "memory package." In view of this finding, we need not decide whether the preamble is limiting.

c) Data and control terminals (1.b)

For claim 1's "data terminals and control terminals," Petitioner argues that Kim's Figure 5 shows data terminals as "DQ," that Kim's Figure 2 shows control terminals as CS0 and CS1, and that Kim's memory package would have control terminals to accept control signals in a

JEDEC-compliant implementation. Pet. 35–38. Patent Owner does not dispute that the combination of Kim and Rajan teaches data terminals and control terminals, but Patent Owner does dispute the JEDEC aspect of Petitioner's combination. We agree with Petitioner, and we find, that Kim teaches a memory package having data terminals and control terminals, and we further address the parties' dispute about JEDEC below.

d) Stacked array dies (1.c) and die interconnects (1.d.1, 1.d.2)

Claim 1 recites "stacked array dies including a first group of array dies and a second group of at least one array die" (1.c). Claim 1 further recites that the memory package has "first die interconnects and second die interconnects, the first die interconnects in electrical communication with the first group of array dies and not in electrical communication with the second group of at least one array die," (1.d.1) and "the second die interconnects in electrical communication with the second group of at least one array die and not in electrical communication with the first group of array dies" (1.d.2).

As noted above in reference to Petitioner's annotated version of Kim's Figure 5, Petitioner identifies Kim's chip C1 as "a first group of array dies" and Kim's chip C2 as "a second group of at least one array die." Pet. 39 (citing Ex. 1014 ¶¶ 26, 48, Fig. 5; Ex. 1003 ¶¶ 197–214). Petitioner argues that having multiple dies in the first group all sharing the same die interconnect would have been obvious. Pet. 40–42 (citing Ex. 1014 ¶¶ 48, 50; Ex. 1024, 9:14–18, Fig. 5; Ex. 1015, Fig. 4; Ex. 1003 ¶¶ 204–212).[9]

[9] Petitioner also argues that "a first group of array dies" can be just one die. Pet. Reply 8–9; *see also* Pet. 40. We do not rely on this argument and, therefore, need not resolve the parties' dispute regarding whether this phrase encompasses a single die.

Petitioner argues that the annotated version of Rajan's Figure 4 below shows "multiple stacked memory chips connected to the same data bus." Pet. 41–42.

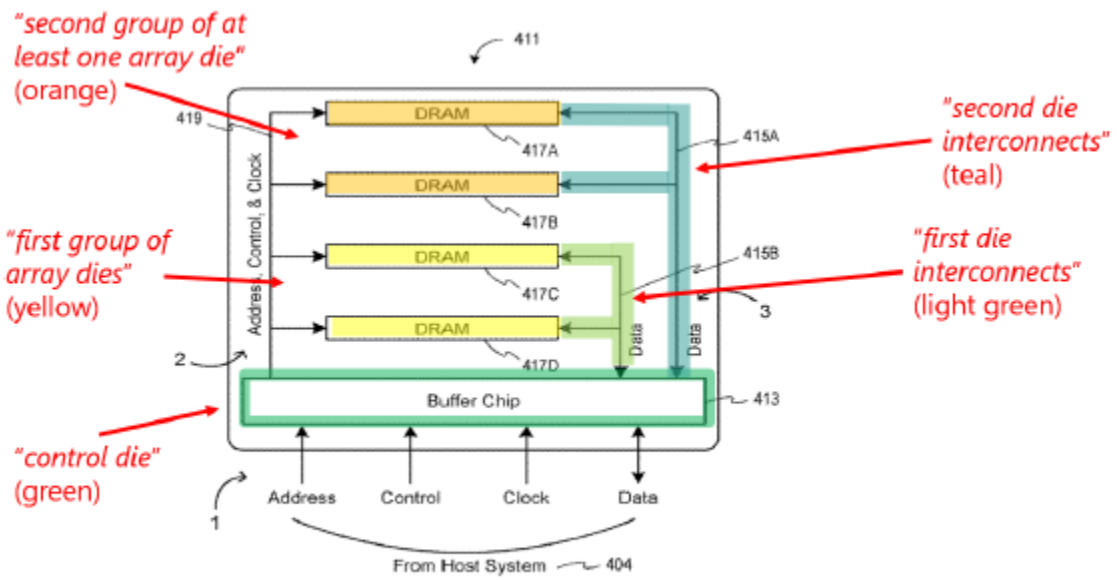

FIG. 4

Rajan's Figure 4 "shows a buffered stack of DRAM circuits having one address, control, and clock bus and two data busses." Ex. 1015, 2:6–7. In the annotated figure above, Petitioner maps depicted components to elements of claim 1 as follows: DRAMs 417C and 417D (yellow) as "first group of array dies"; DRAMs 417A and 417B (orange) as "second ground of at least one array die"; buffer chip 413 (green) as "control die"; data bus (light green) from buffer chip 413 to DRAMs 417C and 417D as "first die interconnects"; and data bus from buffer chip 413 to DRAMs 417A and 417B as "second die interconnects." Pet. 42.

Petitioner argues that Kim and Rajan are analogous art. Pet. 26 (citing Ex. 1003 ¶¶ 150–151). Patent Owner does not dispute that Kim and Rajan are analogous art to the '160 patent. *See* PO Resp. We agree with Petitioner that Kim and Rajan are analogous art because they are both in the same field

of endeavor as the '160 patent—memory packages and in particular those involving stacked memory. Ex. 1001, 1:20–21 ("The present disclosure relates to memory devices and memory modules."), claim 1 ("memory package" with "stacked array dies"); Ex. 1014 ¶ 3 ("Various embodiments of the present disclosure generally relate to a semiconductor memory apparatus . . . ."), Fig. 5 (stacked memory chips); Ex. 1015, 1:14–16 ("This invention relates generally to digital memory such as used in computers[], and more specifically to organization and design of memory modules such as DIMMs [(dual in-line memory modules)]."), Figs. 2–6 (stacked memories).

Petitioner argues that a person of ordinary skill in the art "would be motivated to create a package with an interface that complied with the well-known JEDEC standards, as taught by Rajan," such that Kim's memory package would be compatible with JEDEC. Pet. 26–28 (citing Ex. 1014 ¶ 38, Fig. 5; Ex. 1015, 3:52–54, 4:20–24, 5:36–43, 8:8–11, Figs. 4, 18; Ex. 1003 ¶¶ 147–149, 151–153; Ex. 1019, 12, Fig. 3).

Petitioner also argues that, based on Kim's disclosure of using "any number of" chips (Ex. 1014 ¶ 48), a person of ordinary skill in the art "would have been motivated to look at Rajan for the details about adding more memory chips in the stack." Pet. 28 (citing Ex. 1014 ¶¶ 48, 50; Ex. 1003 ¶¶ 154–156). Petitioner argues that a person of ordinary skill in the art "would have understood that there were a finite number of known ways to connect additional dies, including having a subset of dies sharing a through-silicon via (TSV)," and that "[s]haring a TSV among two or more dies was a known option, as confirmed by other references at the time." Pet. 30 (citing Ex. 1003 ¶¶ 157–159; Ex. 1015, 5:36–43, Figs. 2–6;

Ex. 1025, Fig. 5). Petitioner also argues that a person of ordinary skill in the art "would have been motivated to connect additional memory dies to Kim's TSV1 and TSV2 because it would not require creating new TSVs (which would add space and circuitry) and would allow emulating the JEDEC standard required by external devices." Pet. 30 (citing Ex. 1003 ¶ 160; Ex. 1015, 3:27–30, 3:52–61). Petitioner further argues that "it was common at the time to have multiple memory dies sharing a single data bus" and "to use a 'fork-in-the-road' arrangement with two data buses for two ranks of memory devices . . . with the option of adding two additional ranks of memory devices (resulting in four ranks) to the existing data busses," such that two dies share a bus. Pet. 31 (citing Ex. 1003 ¶¶ 161–162; Ex. 1026, Figs. 12, 13).

As to claim 1's "electrical communication" recitations (1.d.1 and 1.d.2), Petitioner argues that Kim's Figure 5 shows die interconnects (TSV1) connected from chip C0 to chip C1 and not extending to chip C2 and die interconnects (TSV2) connected from chip C0 to chip C2 and passing through chip C1 without being connected. Pet. 43 (citing Ex. 1014, Fig. 5; Ex. 1003 ¶ 220). Petitioner argues that each array die receives multiple data signals and that each signal would be on its own TSV, such that there would be multiple die interconnects to each array die. Pet. 42–43 (citing Ex. 1014 ¶ 28; Ex. 1016 ¶ 30; Ex. 1003 ¶ 220). And, as discussed above, in Petitioner's proposed combination, multiple dies would share a TSV (Pet. 30–31) such that each group would be in electrical communication with the TSVs shared by that group and not other TSVs.

Below, we address Patent Owner's arguments pertinent to recitations 1.c, 1.d.1, and 1.d.2.

(1) Array dies

As noted above in § II.C.1, a district court construed "array die" to mean "array die that is different from a DRAM circuit." Ex. 2004, 31–32. Patent Owner argues that "the Petition contains no analysis on how or why Kim's memory chips are different from Rajan137's DRAM circuits." PO Resp. 47. Patent Owner's argument, therefore, reflects an attempt to limit the district court's construction to exclude only certain types of DRAM circuits, similar to arguments Patent Owner made before institution. *See* Inst. Dec. 11 ("Patent Owner appears to argue that the district court's construction is that the claimed array dies are different from Rajan137's DRAM circuits 206A–D, not all DRAM circuits.").

As noted at institution, Kim does not even mention DRAM and thus is not limited to DRAM, and Rajan states that "any type of memory whatsoever" may be used in its disclosure and lists non-DRAM memories. Inst. Dec. 24 (quoting Ex. 1015, 15:3–9). Therefore, we find that the combination of Kim and Rajan teaches "array dies" under the district court's construction and under Patent Owner's interpretation of that construction.

Patent Owner further argues that,

> if, in Petitioner's combination, the stacked dies are non-DRAMs, neither the Petition nor the declaration explains why a [person of ordinary skill in the art] would be motivated to have the package emulate a DRAM interface or how the resulting structure would work given Petitioner's theory that the interface circuit should provide a JEDEC-compliant interface to the host, citing to SDRAM standards.

PO Resp. 48 (citing Pet. 23–32). According to Patent Owner, "Petitioner has not presented any evidence that with non-DRAM circuits such as NANDs or SRAMs [(static RAM)], a [person of ordinary skill in the art]

would have or could have emulated the memory package as JEDEC-compliant DRAM devices." PO Resp. 48–49 (citing Pet. 8–11, 23–34; Ex. 2023 ¶¶ 173–177); *see also* PO Resp. 50 ("Petitioner has not shown that a [person of ordinary skill in the art] would have been motivated to use non-DRAM dies in combination with an interface circuit that emulates a JEDEC-compliant interface to the host.").

We disagree with Patent Owner's arguments because the evidence in support of Petitioner's position is the express disclosure of Rajan. As noted above, Petitioner argues that a person of ordinary skill in the art "would be motivated to create a package with an *interface* that complied with the well-known JEDEC standards, as taught by Rajan." Pet. 26 (emphasis added). Rajan discloses an "interface circuit [that] may take the form of or incorporate, or be incorporated into, a register, an AMB [(advanced memory buffer)], a buffer, or the like, and may comply with Joint Electron Device Engineering Council (JEDEC) standards, and may have forwarding, storing, and/or buffering capabilities." Ex. 1015, 4:20–24. Rajan explains that "the interface circuit presents to the system device an interface to emulated memory devices which differ in some aspect from the physical memory circuits which are actually present." Ex. 1015, 3:24–27. With reference to Figure 1, Rajan discloses that the "physical memory circuits may be any type of memory circuits." Ex. 1015, 2:59–60. Rajan further discloses that, "[a]lthough the embodiments described here show the stack consisting of multiple DRAM circuits, a stack may refer to any collection of memory circuits (e.g. DRAM circuits, flash memory circuits, or combinations of memory circuit technologies, etc.)." Ex. 1015. 4:51–55. Rajan still further discloses that the "physical memory circuits employed in practicing this

invention may be any type of memory whatsoever, such as: DRAM, DDR DRAM, DDR2 DRAM, DDR3 DRAM, SDRAM, QDR DRAM, DRDRAM, FPM DRAM, VDRAM, EDO DRAM, BEDO DRAM, MDRAM, SGRAM, MRAM, IRAM, NAND flash, NOR flash, PSRAM, wetware memory, etc." Ex. 1015, 15:3–9. Thus, Rajan expressly discloses using non-DRAM dies as the memory circuits.

Patent Owner argues that "Rajan never suggests that its interface die would be emulating a different type of memory circuits from the backend memory." PO Sur-reply 21 (citing Ex. 1015, 15:3–9). We disagree with this argument. As noted above, Rajan's "interface circuit presents to the system device an interface to emulated memory devices which differ in some aspect from the physical memory circuits which are actually present" (Ex. 1015, 3:24–27), and we see nothing in Rajan that limits its teachings as Patent Owner's argument suggests. Furthermore, Rajan discloses that the

> memory subsystem includes a buffer chip 202 which presents the host system with emulated interface to emulated memory, and a plurality of physical memory circuits which, in the example shown, are DRAM chips 206A-D. In one embodiment, the DRAM chips are stacked, and the buffer chip is placed electrically between them and the host system. Although the embodiments described here show the stack consisting of multiple DRAM circuits, a stack may refer to any collection of memory circuits (e.g. DRAM circuits, flash memory circuits, or *combinations of memory circuit technologies*, etc.).

Ex. 1015, 4:45–55 (emphasis added). The fact that the memory stack may include "combinations of memory circuit technologies," such as DRAM and flash, shows that the interface would emulate a memory different from at least one of the memory technologies in the combination when it presents as one type of memory to the host. Rajan also discloses that "the memory

circuits may be symmetrical, meaning each has the same capacity, *type*, speed, etc., while in other embodiments they may be asymmetrical." Ex. 1015, 2:62–67 (emphasis added). Thus, Rajan discloses that symmetrical circuits are of the same type, suggesting that asymmetrical circuits can be of different types behind the interface.

Patent Owner also asserts in a parenthetical that Rajan's disclosure at column 15, lines 3–9 "has no link to 4:20-24 which is part of the description for Fig. 1, related to 'DRAM circuits.'" PO Sur-reply 21. We disagree with this assertion. Rajan at column 4, lines 20–24 discloses that the interface circuit may comply with JEDEC, and this is the "interface circuit" of the disclosed invention. *See* Ex. 1015, 1:65–67 ("FIG. 1 shows a system coupled to multiple memory circuits and an interface circuit according to one embodiment of this invention."). Thus, Rajan's disclosure that the "physical memory circuits employed in practicing *this invention* may be any type of memory whatsoever," including non-DRAMs, (Ex. 1015, 15:3–9 (emphasis added)) is linked to the interface circuit of the invention, which is described throughout Rajan and is described as being JEDEC-compliant in column 4, lines 20–24.

For all of the reasons discussed above, we find that Rajan teaches using non-DRAM memories in a JEDEC-compliant memory package and, therefore, that Rajan provides an express motivation to "to use non-DRAM dies in combination with an interface circuit that emulates a JEDEC-compliant interface to the host." *See* PO Resp. 50.

We also disagree with Patent Owner's argument that "Petitioner has not presented any evidence that with non-DRAM circuits such as NANDs or SRAMs, a [person of ordinary skill in the art] . . . *could have* emulated the

memory package as JEDEC-compliant DRAM devices." *See* PO Resp. 48–49 (emphasis added) (citing Pet. 8–11, 23–34; Ex. 2023 ¶¶ 173–177). We disagree because the express disclosure of Rajan, discussed above, is evidence that a person of ordinary skill in the art could have used non-DRAM memories in a JEDEC-compliant DRAM package. Petitioner cites Rajan's Figure 18 (Pet. 27), which shows an embodiment of an interface circuit, and Rajan's accompanying disclosures provide more details as to how the interface circuit functions. Ex. 1015, 14:6–62.

Furthermore, we have considered the cited testimony from Dr. Brogioli, which focuses on how NAND flash and SRAM both differ from DRAM. Ex. 2023 ¶¶ 173–177. When considered in view of the disclosure of Rajan, the listed differences do not indicate or suggest difficulties beyond the skill of an ordinarily skilled artisan to implementing JEDEC-compliant interfaces with non-DRAM memories. For example, Dr. Brogioli testifies that NAND "signaling, electrical and physical interface are drastically different than that of DRAM memory devices, or DRAM memory modules that are JEDEC or JEDEC adjacent." Ex. 2023 ¶ 175. But Rajan discloses that memory characteristics emulated by the interface circuit "may be electrical in nature, physical in nature, logical in nature, pertaining to a protocol, etc." Ex. 1015, 3:36–38. As to signaling in particular, Rajan discloses that "[t]he interface circuit may emulate the number of signals, type of signals, duration of signal assertion, and so forth" and "may combine multiple signals to emulate another signal." Ex. 1015, 3:48–51. Dr. Brogioli also testifies about "vastly different timing" between NAND and DRAM (Ex. 2023 ¶ 175), but Rajan discloses that "[a]n example of an emulated protocol characteristic might be a timing" (Ex. 1015, 3:42–43) and

that the interface circuit's "emulation logic may, in various embodiments, alter a *timing*, value, latency, etc. of any of the address, control, clock, and/or data signals it sends to or receives from the system and/or the physical memory" (Ex. 1015, 14:55–59 (emphasis added)). Therefore, Dr. Brogioli's testimony fails to account for Rajan's disclosure. Dr. Brogioli's testimony as to the "different signaling mechanism" that SRAM uses (Ex. 2023 ¶ 177) is similarly unpersuasive.

Furthermore, Dr. Brogioli's testimony addressing NAND flash and SRAM differences fails to appreciate that Rajan is not so limited and lists other non-DRAM memories that can be used, including NOR flash. *See* Ex. 1015, 15:3–9.

For the foregoing reasons, we find that the combination of Kim and Rajan teaches "array dies."

(2) Electrical communication

Patent Owner argues that Petitioner has not shown that the combination of Kim and Rajan teaches "first die interconnects in electrical communication with" multiple array dies. PO Resp. 20–44.

Patent Owner argues that Kim discloses that "each TSV is in communication with only a single chip." PO Resp. 20 (citing Ex. 1014, Fig. 5; Ex. 2023 ¶ 84). Although Kim's Figure 5 depicts TSV1 in communication with chip C1 and TSV2 in communication with chip C2, Kim discloses that "any number of . . . chips may be used" (Ex. 1014 ¶ 48), as Petitioner points out. *See* Pet. 28 (citing Ex. 1003 ¶¶ 154–156; Ex. 1014 ¶¶ 48, 50). Petitioner argues that this disclosure would have motivated a person of ordinary skill in the art "to look at Rajan for the details about adding more memory chips in the stack (resulting, e.g., in four chips . . . in

two groups . . .)." Pet. 28. We agree with Petitioner, and we find, that Kim's disclosure suggests having more than the two chips depicted in Figure 5. *See* Ex. 1014 ¶¶ 48 ("Although only one main chip and two slave chips are shown, it is to be understood that any number of main and slave chips may be used."), 50 ("While the semiconductor memory apparatuses having two ranks are explained with reference to FIGS. 2 and 5, a person having ordinary skill in the art will appreciate that the technical concept of the present invention can be applied to a semiconductor memory apparatus which are divided into three or more ranks."); *see also* Ex. 1003 ¶ 155 ("A Skilled Artisan would have understood from this disclosure that Kim's invention can include more slave chips (and more ranks) and that some of those additional slave chips proposed by Kim can be in the same group as chips C1 or C2 and connected to TSV1 or TSV2, respectively.").

> Petitioner contends that a person of ordinary skill in the art
>
> would have been motivated to implement a shared data bus for multiple memory chips as taught by Rajan (e.g., 415A and 415B, above) using, e.g., Kim's TSV interconnects . . ., in part because a [person of ordinary skill in the art] would have understood that there were a finite number of known ways to connect additional dies, including having a subset of dies sharing a through-silicon via (TSV).

Pet. 30 (citing Ex. 1003 ¶¶ 157–159; Ex. 1015, 5:36–43, Figs. 2–6). Thus, Petitioner's contention is that, given Kim's express disclosure of having more than two memory chips, a person of ordinary skill would have looked to Rajan for details about adding more memory chips. Petitioner argues that Rajan teaches "a shared data bus for multiple memory chips" as depicted in Rajan's Figure 4 (Pet. 30), and Patent Owner agrees. *See* PO Resp. 21 ("In

Rajan, Figure 4, Rajan's DRAM circuits 417A and 417B share one data bus and DRAM circuits 417C and 417D share another data bus.").

Patent Owner does not dispute Petitioner's contention (Pet. 30) that there are a finite number of known ways to connect additional dies, one of which being to have dies share a TSV. *See* PO Resp. In support of its contention that "[s]haring a TSV among two or more dies was a known option," as confirmed by other references, such as Foster, Petitioner provides the annotated figure below.

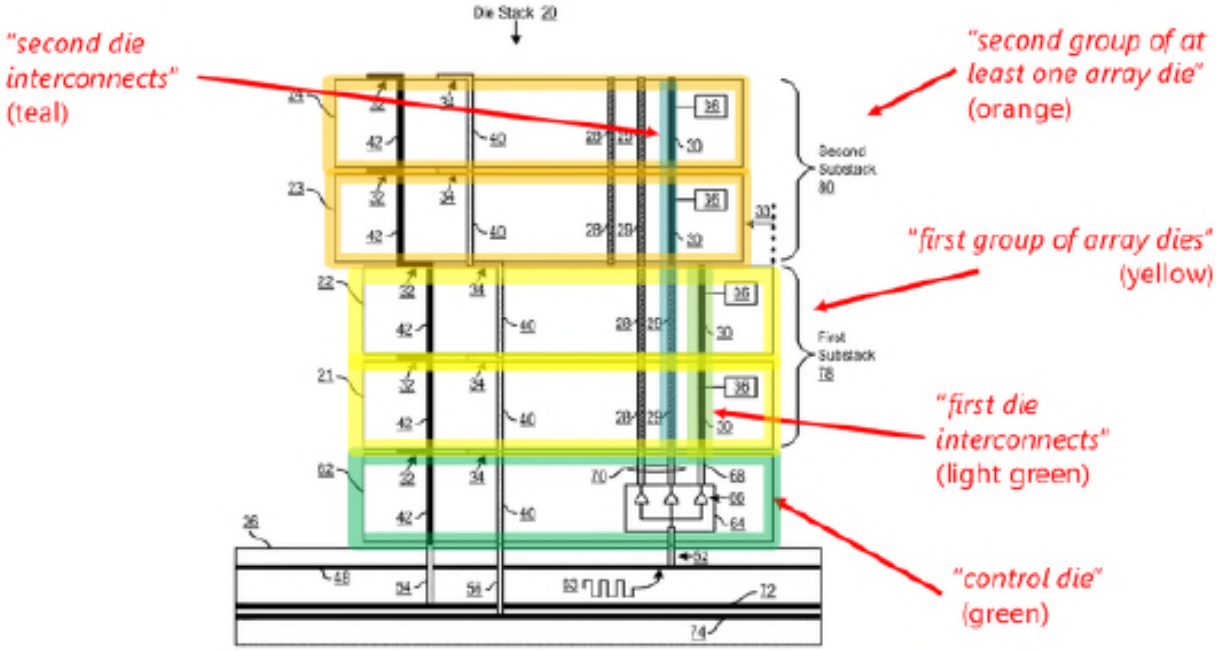

FIG. 5

Pet. 30 (citing Ex. 1025 ("Foster"),[10] Fig. 5). Foster's Figure 5 shows a cross-sectional view of die stack 20 including first substack 78 of dies 21 and 22 and second substack 80 of dies 23 and 24. Ex. 1025, 7:28–45. Petitioner identifies first substack 78 as a "first group of array dies" in yellow and second substack 80 as a "second group of at least one array die" in orange. Pet. 30. In Figure 5, TSVs 30 (identified by Petitioner in light

[10] US 8,258,619 B2, filed Nov. 12, 2009, issued Sept. 4, 2012.

green) connect to the first substack but do not extend to the second substack, and pass-through vias (PTVs) 29 (identified by Petitioner in teal) go through the first stack and connect to TSVs in the second substack. Ex. 1025, 7:45–54. Foster explains that PTVs are "conductive pathways through each die with no connections to any circuitry on the die" and that TSVs are "conductive pathways through the dies that also connect to electronic circuitry (36) on the die." Ex. 1025, 2:53–56.

Patent Owner and Dr. Brogioli do not disagree with Petitioner's assertion that Foster shows that "[s]haring a TSV among two or more dies was a known option." *See* Pet. 30. Rather, they address different issues. Patent Owner argues that Petitioner cites Foster "for die grouping." PO Resp. 21 n.3. And Dr. Brogioli testifies that "Foster does not specify the relationship of the dies forming the substack that shares a TSV or PTV" or suggest a certain die grouping. Ex. 2023 ¶ 164. Regardless of whether Foster teaches a certain die grouping, we agree with Petitioner that Foster shows that "[s]haring a TSV among two or more dies was a known option." *See* Pet. 30.

Petitioner's contention, as noted above, is that a person of ordinary skill in the art "would have been motivated to implement a shared data bus for multiple memory chips as taught by Rajan . . . using, e.g., Kim's TSV interconnects." Pet. 30. Rajan's Figure 4 is shown below.

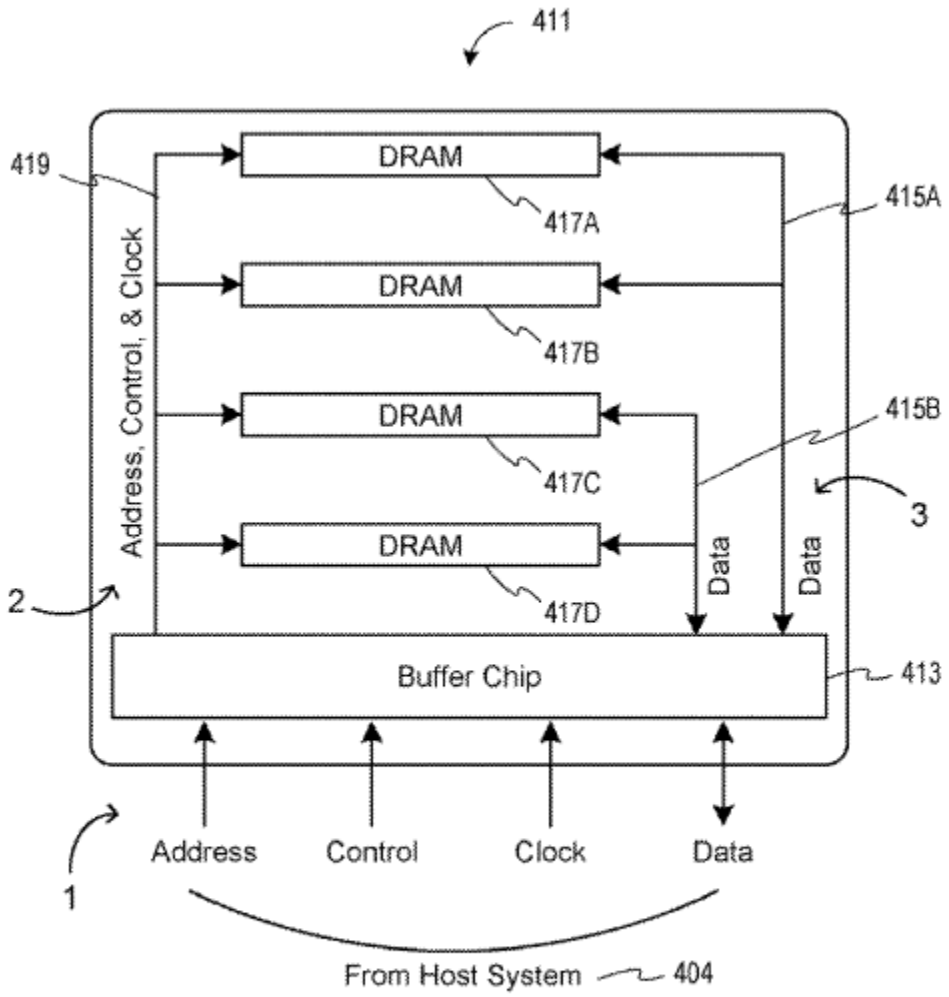

FIG. 4

Rajan's Figure 4 above "shows a buffered stack of DRAM circuits having one address, control, and clock bus and two data busses." Ex. 1015, 2:6–7; *see also* Ex. 1015, 4:51–55 ("Although the embodiments described here show the stack consisting of multiple DRAM circuits, a stack may refer to any collection of memory circuits (e.g. DRAM circuits, flash memory circuits, or combinations of memory circuit technologies, etc.)."). As shown in Figure 4, memory chips 417A and 417B share data bus 415A, and memory chips 417C and 417D share data bus 415B. Ex. 1015, 5:39–42.

Dr. Brogioli testifies that "Rajan uses wire bonds for connecting its DRAM circuits to the data busses, and wire bonds ordinarily cannot be shared in the way that TSVs are shared." Ex. 2023 ¶ 143 (citing Ex. 1011 ¶ 50). In support of this statement, Dr. Brogioli does not cite the Rajan reference on which Petitioner's challenge is based; rather, he cites Rajan137, which states that "data signals may be wired as one common bus, several busses or as an individual bus to each DRAM circuit." Ex. 1011 ¶ 50, *quoted in* Ex. 2023 ¶ 143. Rajan, however, does not include this disclosure and does not state that its dies are connected with wire bonds. Thus, we do not credit Dr. Brogioli's testimony that Rajan uses wire bonds.

Dr. Brogioli also testifies that

> [t]he '060 patent discloses that an example of a die interconnect is a wire bond. But that wire bond is different from a wire bond dangling from the side of a DRAM circuit such as those in Rajan. Instead, the type of wire bonds referenced by the '060 patent are wires internal to a die, acting, for example, like a redistribution line.

Ex. 2023 ¶ 39 n.1 (citing "*e.g.*, the red and blue wires in DDX4-48" (Ex. 2030)[11]). Even if Rajan's Figure 4 shows wire bonds, an opinion that we do not credit as explained above, Dr. Brogioli does not explain why a wire bond in Rajan would be different from the wire bonds that can be die interconnects in the '160 patent. *See* Ex. 1001, 5:54–56 ("Examples of die interconnects include, but are not limited to, through-silicon vias (TSV), conducting rods, wire bonds, and pins."). In addition, it is not clear what "the red and blue wires in DDX4-48" (Ex. 2023 ¶ 39 n.1) show because the cited page is about "Accused HBM Products" and does not mention wire

[11] Dr. Brogioli appears to be referring to Ex. 2030. *See* Ex. 2023 ¶ 57 (citing "EX2030, DDX4-53").

bonds. *See* Ex. 2030, DDX4-48. Thus, this testimony is not helpful in explaining any alleged differences in wire bonds. *See* 37 C.F.R. § 42.65(a) ("Expert testimony that does not disclose the underlying facts or data on which the opinion is based is entitled to little or no weight."). Furthermore, we do not agree with Dr. Brogioli's testimony that wire bond die interconnects in the '160 patent "are wires internal to a die" (Ex. 2023 ¶ 39 n.1) because wires that are only internal to one die would not interconnect with another die, and, thus, would not be a "die interconnect."

In view of the foregoing, we find that Rajan does not disclose the particular structure in which the shared data busses in Figure 4 are implemented. In other words, Rajan's disclosure is agnostic as to the particular interconnect technology by which the memories that share data busses are connected to the buffer chip.

Dr. Brogioli also testifies that a "data bus can be shared without sharing interconnects, especially in Rajan," "because Rajan uses wire bonds for connecting its DRAM circuits to the data busses." Ex. 2023 ¶ 143 (citing Ex. 1011 ¶ 50). As discussed above, we do not credit Dr. Brogioli's opinion that Rajan uses wire bonds because it is based on a different reference. Furthermore, the fact that a data bus can be shared without sharing interconnects is irrelevant because Petitioner's proposed combination is to share interconnects (Kim's TSVs). *See* Pet. 30. Rajan's Figure 4 discloses a stack of memory circuits, as discussed above (*see* Ex. 1015, 2:6–7, 4:51–55), and Kim discloses using TSVs in stacks of memory chips, as also discussed above (*see* Ex. 1014 ¶¶ 48, 50, Fig. 5). Thus, Petitioner's combination is a straightforward one – "implement a shared data bus for multiple memory

chips as taught by Rajan . . . using, e.g., Kim's TSV interconnects." Pet. 30 (discussed above).

At oral argument, Patent Owner's counsel argued that the "TSV is the individual data wire going down to the bus that's shared." Tr. 65:12–13. According to Patent Owner's counsel,

> Rajan talks about [two chips] sharing a data bus. So, I don't see how, from Rajan, you would get the idea of a shared TSV when Rajan speaks solely about sharing data buses. And the data bus, under JEDEC standard, involves individual data wires coming from each of the chips.

Tr. 65:26–66:4. By this argument, Patent Owner's counsel appears to be suggesting that, even if TSVs are used, they would just connect each chip to a shared data bus. But this is not the proposed combination, as stated above, which is to implement a shared bus per Rajan using Kim's TSVs. *See* Pet. 30. Implementing a bus using TSVs is consistent with the evidence of record. *See* Ex. 1025, 1:39–42 ("A more recent approach for wafer stacking is to connect the signals together with vias, effectively sending a bus of signal lines vertically through a stack of dies."), 2:56–64 ("[A]ggregations of PTVs and TSVs will often be used to effect connection of bus signals from a substrate up through the die stack to circuitry somewhere in the die stack.").

Based on the foregoing, we find persuasive Petitioner's contention that a person of ordinary skill in the art

> would have been motivated to implement a shared data bus for multiple memory chips as taught by Rajan (e.g., 415A and 415B, above) using, e.g., Kim's TSV interconnects . . ., in part because a [person of ordinary skill in the art] would have understood that there were a finite number of known ways to connect additional dies, including having a subset of dies sharing a through-silicon via (TSV).

See Pet. 30. Furthermore, we find persuasive Petitioner's reasoning that a person of ordinary skill in the art "would have been motivated to connect additional memory dies to Kim's TSV1 and TSV2 because it would not require creating new TSVs (which would add space and circuitry)." Pet. 30 (citing Ex. 1003 ¶ 160). As discussed above, Kim suggests having more than two dies, Rajan discloses how to share a data bus among multiples dies, and the evidence of record shows that TSVs were used to implement data busses. Ex. 1014 ¶¶ 48, 50; Ex. 1025, 1:39–42, 2:56–64. We find that using the existing TSVs of Kim would be beneficial to avoid having to create new ones, "which would require space and additional circuitry." Ex. 1003 ¶ 160.

Having found persuasive the above contentions, we turn to the issue of whether the proposed combination would have been within the ability of a person of ordinary skill in the art. *See KSR*, 550 U.S. at 421 (noting that "a person of ordinary skill has good reason to pursue the known options *within his or her technical grasp*" (emphasis added)); *see also id.* at 417 ("[I]f a technique has been used to improve one device, and a person of ordinary skill in the art would recognize that it would improve similar devices in the same way, using the technique is obvious unless its actual application is beyond his or her skill.").

Patent Owner argues that the asserted combination could result in four possible configurations and that each configuration either would be inoperable or would not meet the claims. PO Resp. 22 (citing Ex. 2023 ¶ 86). Patent Owner asserts that the

> four possibilities are: (1) four chips belong to two ranks and two chips from the same rank share a common TSV; (2) four chips belong to two ranks and a chip from one rank shares a TSV with a chip from another rank; (3) four chips belong to four ranks and

> each of the four ranks has its own TSV; and (4) four chips belong to four ranks and every two ranks share a TSV.

PO Resp. 22 (citing Ex. 2023 ¶ 86).

We need not address the first three configurations because, for the reasons explained below, we find Petitioner's combination persuasive in the fourth configuration. Patent Owner argues that a person of ordinary skill in the art would not combine the teachings of Kim and Rajan in the fourth configuration because it would result in unavoidable data collisions. PO Resp. 32–44. Patent Owner asserts that, "[a]s Dr. Brogioli testified, handling data collisions involves 'a lot of complexities' that [are] 'beyond the scope of a person of skill.'" PO Sur-reply 9 (citing Ex. 1052, 283:17–284:12). Patent Owner argues, therefore, that "the requirement that at least one die interconnect be in connection with a group of array dies (plural) would be incompatible with Kim's system and the proposed modifications are inoperable for Kim's memory system for its intended purposes." PO Resp. 43 (citing Ex. 2023 ¶¶ 149–150); *see* Ex. 2023 ¶ 150 ("A person of ordinary skill in the art would not have had a reason or a reasonable expectation of success to modify Kim so that multiple dies share the same TSV signaling path.").

Petitioner argues that techniques for avoiding collisions on shared data lines were well-known to persons of ordinary skill in the art, citing as one example Rajan's teachings of timing solutions to avoid collisions. Pet. Reply 2–8 (citing, *inter alia*, Ex. 1015, 8:59–12:13, Figs. 9–15). For the reasons explained below, we find persuasive Petitioner's contentions that persons of ordinary skill in the art knew how to deal with collisions.

The specification of the '160 patent mentions collisions only once:

> Some implementations of the control dies 822 include a plurality of command/address buffers (not shown). These buffers may comprise latches. In certain embodiments, the buffers are configured to hold command/address signals to control the timing of command/address signals. In some cases, controlling the timing of the command/address signals may reduce or slow signal degradation. In some implementations, the control dies 822 include a plurality of data buffers, which may control the timing of data signals to reduce or slow signal degradation. Further, the control dies 822 may include a data path control circuit (not shown) that is configured to control command/address time slots and data bus time slots. Controlling the command/address time slots and the data bus time slots enables the control dies 822 to *reduce or prevent signal collisions* caused by multiple memory packages 820 sharing the data path control lines 816 and the data bus 818. In some implementations, the data path control circuit may be separate from the control die 822.

Ex. 1001, 21:24–41 (emphasis added). The fact that the '160 patent mentions *reducing or* preventing signal collisions suggests that there is no prohibition on signal collisions. This is in contrast with Dr. Brogioli's more limited view that if there are any data collisions the resulting structure would be inoperable. Ex. 2023 ¶ 150. Moreover, the challenged claims do not recite that data collisions must be avoided, and "[t]he reasonable expectation of success requirement refers to the likelihood of success in combining references *to meet the limitations of the claimed invention*." *Intelligent Bio-Sys., Inc. v. Illumina Cambridge Ltd.*, 821 F.3d 1359, 1367 (Fed. Cir. 2016) (emphasis added). Thus, Dr. Brogioli's testimony about the lack of "a reasonable expectation of success" (Ex. 2023 ¶ 150) is not commensurate in scope with the claims. Furthermore, the above-quoted passage from the '160 patent does not provide any particular details on how to control timing to reduce or prevent collisions, suggesting that this was within the

knowledge and skill of a person of ordinary skill in the art, as Petitioner asserts. *See* Pet. Reply 2–8. Thus, "the ['160] patent itself does not disclose the level of detail that [Patent Owner] would have us require of the prior art." *See Lockwood v. Am. Airlines, Inc.*, 107 F.3d 1565, 1570 (Fed. Cir. 1997).

At oral argument, Patent Owner's counsel argued that the '160 patent "avoids the collisions" by "dramatically remov[ing] the latency on the TSVs," which "dramatically increases the speed at which the load and reads can be cleared." Tr. 40:4–11. According to Patent Owner's counsel, the '160 patent's collision solution is at column 8, lines 1–21 and is "a physical solution to a timing problem, not a timing solution to a physical problem." Tr. 39:15–40:11. The cited disclosure is below.

> For certain embodiments, the load of each data conduit is less than the maximum load as described above. Thus, in some cases, the load of the data conduit 232a is less than the maximum load and the load of the data conduit 232b is less than the maximum load. Further, in many implementations, the combined load of the data conduit 232a and the data conduit 232b is less than the maximum load of a single data conduit. In other words, it is possible to design the data conduit 232a and the data conduit 232b to reduce the overall load compared to a single data conduit that is in electrical communication with a die interconnect that is in electrical communication with at least one data port of each of the array dies 210. By reducing the overall load compared to the single data conduit, it is possible in many cases to reduce power consumption. Further, it is possible in many cases to maintain signal quality (e.g. maintain signal amplitude, maintain low signal distortion, etc.) while reducing power consumption. Advantageously, in a number of embodiments, by using multiple data conduits instead of a single data conduit, the speed of the memory package 200 can be increased. In some cases, this speed increase can include a

> reduced latency in accessing array dies 210 and/or operating the memory package 200 at a higher clock frequency.

Ex. 1001, 7:66–8:21. This passage says nothing about avoiding collisions. As discussed above, the '160 patent discloses that "[c]ontrolling the command/address time slots and the data bus time slots enables the control dies 822 to reduce or prevent signal collisions." Ex. 1001, 21:36–39. Thus, the '160 patent suggests that there is a timing solution to address collisions, contrary to Patent Owner's counsel's argument. *See* Tr. 39:15–40:11.

Petitioner asserts that Rajan "provides much more detail than the 160 Patent with respect to timing solutions for avoiding collisions." Pet. Reply 6 (citing Ex. 1015, 8:59–12:13, Figs. 9–15). We agree because, as discussed above, the '160 patent simply mentions controlling timing to reduce or prevent collisions but does not provide any particular details on how to do this. Ex. 1001, 21:36–39. Rajan, however, actually explains how to avoid collisions through the timing of various operations. *See, e.g.*, Ex. 1015, 11:12–12:13, Figs. 14, 15. For example, Rajan discloses that "FIGS. 14 and 15 are a timing diagram 1400 and a timing diagram 1500 illustrating methods of avoiding such collisions." Ex. 1015, 11:12–14; *see also* Ex. 1052, 200:15–19 (Dr. Brogioli testified as follows: "It looks like Figure 14 says it's a timing diagram illustrating methods of avoiding such collisions. These look like command collisions of things like activate commands, read and write commands.").

Patent Owner argues that Rajan does not teach how to avoid collisions for operations that "involved cross-rank read-after-write operations and certainly not for Kim's memory systems" and that "[d]elaying write commands will just further delay the write data, and does not solve Kim's data collision problem." PO Sur-reply 10 (citing Ex. 1014 ¶ 42, Fig. 4A).

Rajan's disclosure is more robust than simply delaying write operations. For example, Rajan discloses that the buffer chip can delay activate operations by one to three clock cycles and that "[t]he actual delay selected may depend on the presence or absence of other DRAM operations that may conflict with the activate operation, and may optionally change from one activate operation to another. In other words, the delay may be dynamic." Ex. 1015, 11:40–47.

In support of its arguments regarding the fourth configuration, in which four chips belong to four ranks and every two ranks share a TSV, Patent Owner refers to Dr. Brogioli's modification of Kim's Figure 2 below.

FIG.2

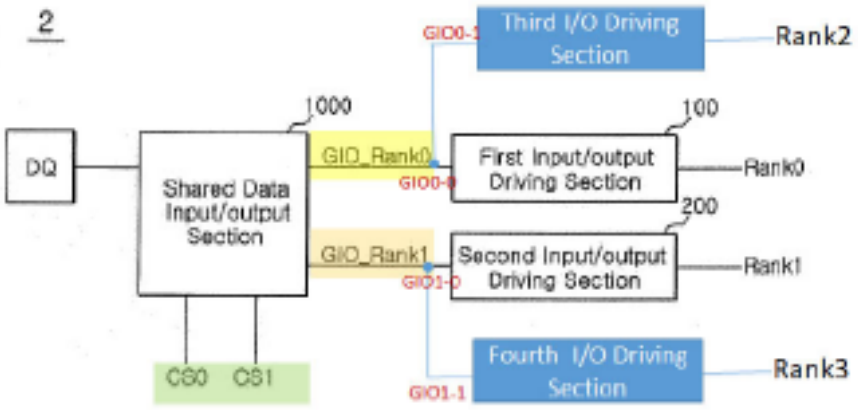

PO Resp. 33; Ex. 2023 ¶ 120. Kim's Figure 2 illustrates a memory configuration including shared data input/output (I/O) section 1000 connected via first and second global I/O lines GIO_Rank0 and GIO_Rank1 to first and second I/O driving sections 100 and 200, which are connected, respectively, to Rank0 and Rank1. Ex. 1014 ¶¶ 25–26. The modified figure above includes a third I/O driving section connected between GIO_Rank0 and Rank 2 and a fourth I/O driving section connected between GIO_Rank1 and Rank 3. Ex. 2023 ¶ 120. Dr. Brogioli testifies that this illustrates

Dr. Wolfe's proposal that "Kim could be modified by having four ranks sharing two data busses, for instance, in a rank multiplication scenario." Ex. 2023 ¶¶ 119–120. At deposition, Dr. Brogioli confirmed that he "assume[d] that Kim's circuits would operate the same way as in Kim's original Figure 2." Ex. 1052, 320:5–11.

Dr. Brogioli's assumption of no change in operation with the addition of two ranks fails to account for the combined teachings of Kim and Rajan and the knowledge and skill of a person of ordinary skill in the art. As the Federal Circuit instructs,

> *KSR* does not require that a combination only unite old elements without changing their respective functions. Instead, *KSR* teaches that "[a] person of ordinary skill is also a person of ordinary creativity, not an automaton." And it explains that the ordinary artisan recognizes "that familiar items may have obvious uses beyond their primary purposes, and in many cases a person of ordinary skill will be able to fit the teachings of multiple patents together like pieces of a puzzle."

ClassCo, Inc. v. Apple, Inc., 838 F.3d 1214, 1219 (Fed. Cir. 2016) (citations omitted; alteration in original). The Federal Circuit further cautioned in *ClassCo* that the "rationale of *KSR* does not support [the] theory that a person of ordinary skill can only perform combinations of a puzzle element A with a perfectly fitting puzzle element B." *Id.* Here, Dr. Brogioli alleges that the modified figure reflects "a rank multiplication scenario" (Ex. 2023 ¶ 119), but when asked about the fact that there are four ranks but only two chip select signals shown in the modified figure, Dr. Brogioli testified that "Dr. Wolfe didn't articulate anything about additional chip select signals that would relate to what this figure is visualizing." Ex. 1052, 320:12–24. Dr. Wolfe, however, testifies that Rajan teaches "emulation techniques, including rank multiplication techniques" (Ex. 1003 ¶ 161), and that Rajan

teaches rank multiplication by generating chip select signals for each chip in the stack. Ex. 1003 ¶¶ 140, 447–448 (quoting Ex. 1015, 6:34–38). In particular, Rajan discloses that "extra address bits may be decoded by the buffer chip to individually select the DRAM chips, utilizing separate chip select signals (not shown) to each of the DRAM chips in the stack." Ex. 1015, 6:34–38. Thus, Dr. Brogioli's modified version of Kim's Figure 2 does not reflect "a rank multiplication scenario" (Ex. 2023 ¶ 119) in view of the teachings of Rajan.

Patent Owner also argues that "Petitioner has not shown that its relied-on non-DRAM chips would utilize chip-select signals." PO Resp. 51–52 (citing Ex. 2023 ¶¶ 169–171, 193; Ex. 1015, 6:34–38; Exs. 2043, 2044). Dr. Brogioli identifies NAND and SRAM datasheets that he says do not show "pins for chip-select signals." Ex. 2023 ¶¶ 169–170 (citing Ex. 2043, 8; Ex. 2044, 5–6). But at deposition, Dr. Brogioli acknowledged that these devices use chip enable signals. Ex. 1052, 236:23–239:3 (discussing Ex. 2043), 239:10–241:6 (discussing Ex. 2044). We agree with Petitioner that the chip enable signals are used "to select the chip that performs the read/write operation." *See* Pet. Reply 19; Ex. 2043, 16 ("CE# is used to enable the device."); Ex. 2044, 5 (pin for "Chip enable input"). The use of chip enable signals is consistent with the district court construction, which Patent Owner urges "should be applied by the Board," that "'excludes situations in which a chip select signal could *enable* multiple array dies at once.'" *See* PO Resp. 18–19 (quoting Ex. 2004, 33–34 (emphasis added)).

Patent Owner asserts that "[t]here is also no evidence that the concept of 'rank'/'rank multiplication,' would apply to non-DRAM memory

systems." PO Resp. 52 n.8 (quoting Ex. 1022, 413 ("[T]he word *rank* is now used to denote a set of DRAM devices that operate in lockstep to respond to a given command in a memory system.")). We disagree for the reasons discussed above in section II.D.2.d.1, which explains that Kim does not even mention DRAM and thus is not limited to DRAM and that Rajan states that "any type of memory whatsoever" may be used in its disclosure and lists non-DRAM memories. Ex. 1015, 15:3–9.[12] Thus, we find that the combined teachings of Kim and Rajan teach ranks and rank multiplication with non-DRAM array dies.

(3) Summary of findings for 1.c, 1.d.1, 1.d.2

For the reasons discussed above, we find that the combination of Kim and Rajan teaches the subject matter of limitations 1.c, 1.d.1, and 1.d.2 and that a person of ordinary skill in the art would have combined the teachings of Kim and Rajan in the manner asserted with a reasonable expectation of success.

e) Control die (1.e.1), data conduits (1.e.2, 1.e.3), and drivers (1.e.4, 1.e.5)

Claim 1 recites a "control die" (1.e.1) comprising "first data conduits between the first die interconnects and the data terminals" (1.e.2) and "second data conduits between the second die interconnects and the data terminals" (1.e.3).

Petitioner argues that Kim's main chip C0 is a control die and that Kim's Figure 5 (annotated version below) shows first and second data conduits between the TSVs and the data terminals DQ. Pet. 44–49.

---

[12] We further note that Patent Owner's argument is conclusory and appears only in a footnote. *Cf. CommScope Techs. LLC v. Dali Wireless Inc.*, 10 F.4th 1289, 1296 (Fed. Cir. 2021) ("[A]n argument that is only made in a footnote of an appellant's brief is forfeited.").

FIG.5

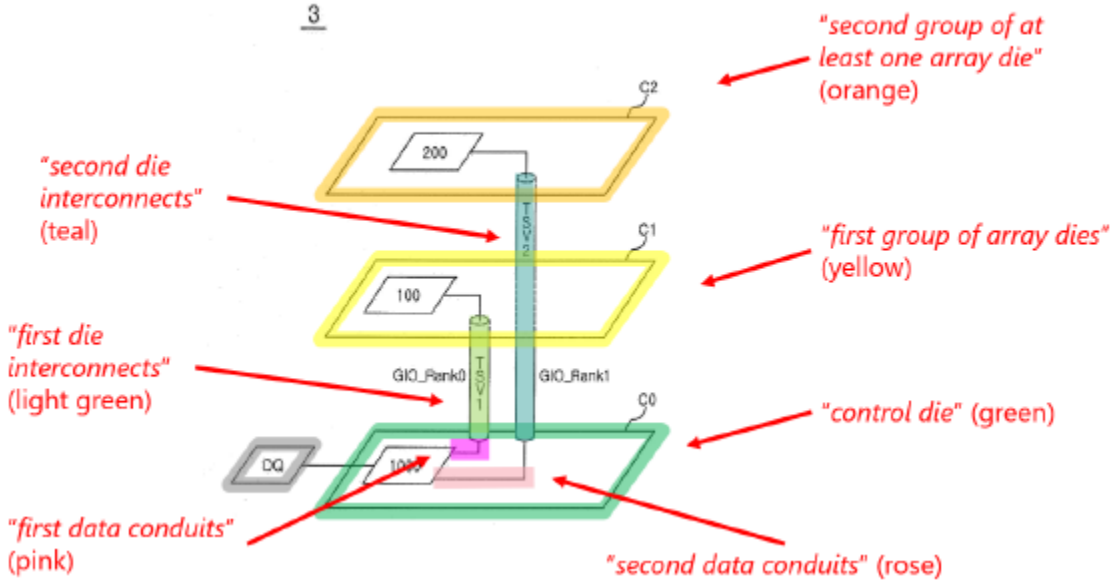

Pet. 44. In the annotated figure above, Petitioner identifies the line from TSV1 to shared data I/O section 1000 as "first data conduits" in pink and identifies the line from TSV2 to shared data I/O section 1000 as "second data conduits" in rose. Pet. 45–46. As shown and as Petitioner asserts, the conduits are between the interconnects (TSVs) and the data terminals (DQ). *See* Pet. 46–47.

Claim 1 further recites "the first data conduit including first drivers each having a first driver size and configured to drive a data signal from a corresponding data terminal to the first group of array dies" (1.e.4) and "the second data conduit including second drivers each having a second driver size and configured to drive a data signal from a corresponding data terminal to the second group of at least one array die, the second driver size being different from the first driver size" (1.e.5).

Petitioner argues that it would have been obvious for the data conduits to have drivers of different strengths for the TSVs of different lengths in Kim based on Wyman's teachings of using different amounts of drive for

different path lengths. Pet. 51–53 (citing Ex. 1017, 1:22–24, 2:61–65, 6:15–30, 6:44–50, 7:14–18, Figs. 5, 7, 8, 10, 11; Ex. 1030, 135–38; Ex. 1003 ¶¶ 257–265); *see also* Pet. 32–34 (discussing combination with Wyman).

Below is Petitioner's annotated version of a portion of Kim's Figure 3.

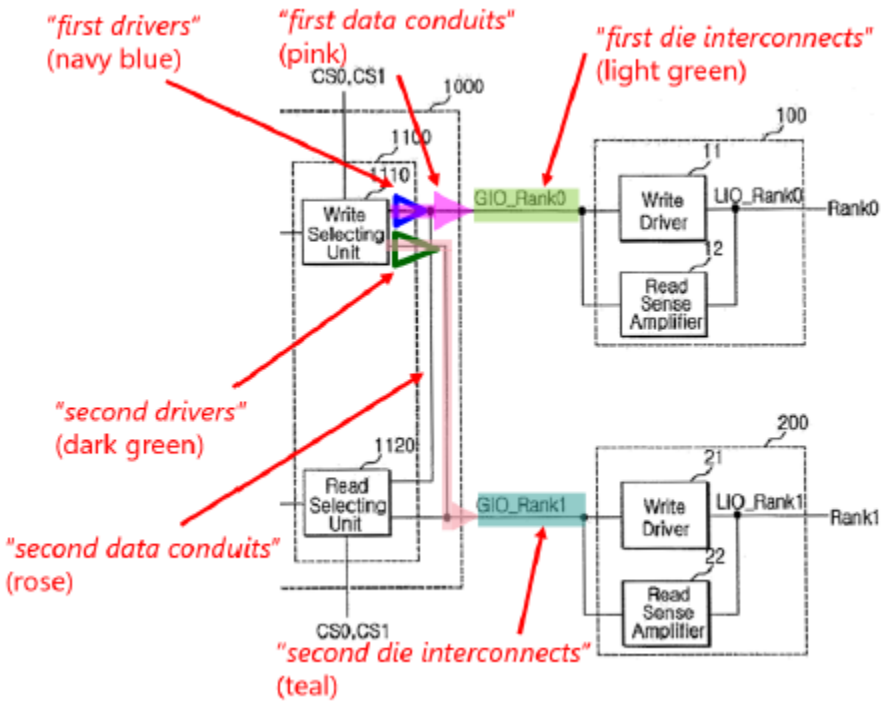

Pet. 34, 50. The portion of Kim's Figure 3 above shows rank selecting unit 1100 as part of shared data I/O section 1000 including write selecting unit 1110 and read selecting unit 1120. Ex. 1014 ¶¶ 34–35. Petitioner modifies the figure above to include a navy blue triangle representing "smaller drivers" between write selecting unit 1110 GIO_Rank0 (first die interconnects) and a larger dark green triangle representing "larger drivers" between write selecting unit 1110 and GIO_Rank1 (second die interconnects). Pet. 33–34, 49–50.

Patent Owner presents two main arguments in response to Petitioner's reliance on Wyman: (1) that Wyman teaches using a single driver such that

a person of ordinary skill in the art would not have used different drivers as recited in the claim; and (2) that Wyman and Kim do not suggest that TSVs of different lengths in Kim would warrant using different amounts of drive. PO Resp. 44–47.

We disagree with Patent Owner's second argument because it ignores the express disclosure of Wyman. Figure 8 of Wyman is below.

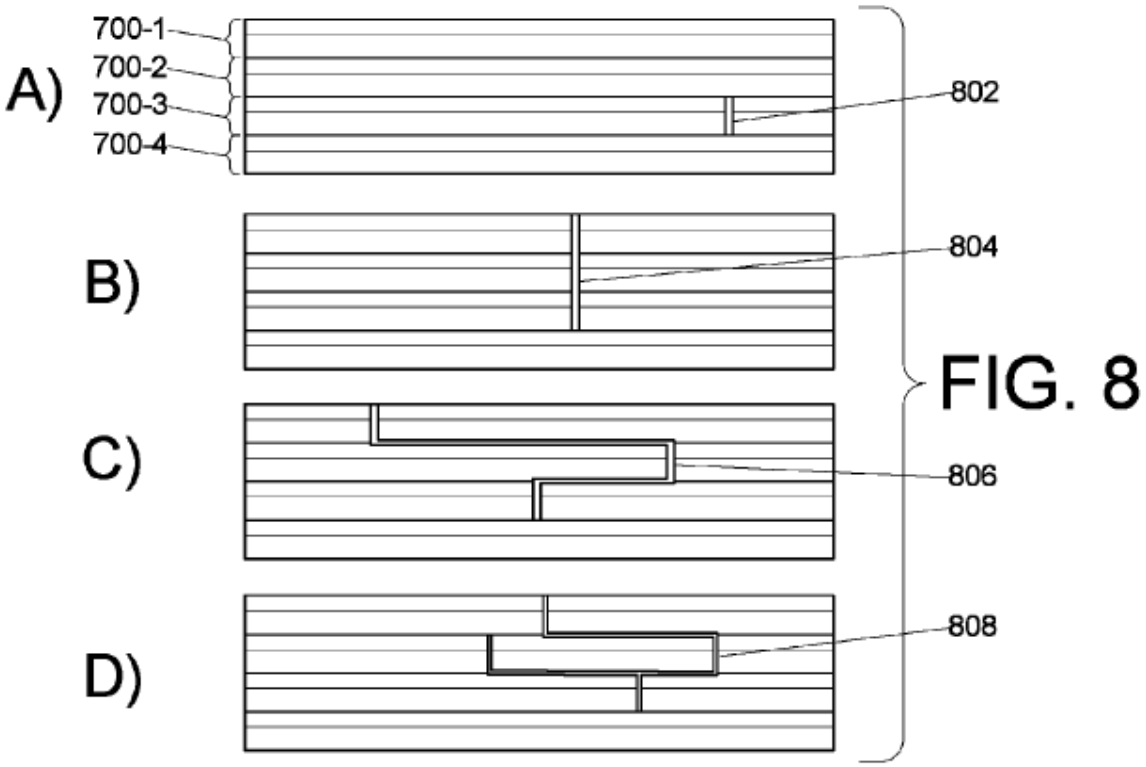

Wyman's Figure 8 above shows "different through-chip via connections" for stacked chips 700-4 (the "mother chip") and 700-1, 700-2, and 700-3 (the "daughter chips"). Ex. 1017, 2:21–23, 6:9–14. Figure 8A shows through-chip via connection 802 from mother chip 700-4 to the closest daughter chip labeled 700-3, and Figure 8B shows through-chip via connection 804 from mother chip 700-4 to the farthest daughter chip labeled 700-1. Ex. 1017, 6:15–23. Wyman discloses that "[t]he increased resistance, capacitance and impedance of such a connection (804) might

require additional drive than that referred to in connection with FIG. 8A" and that the drive used for connection 802 "would be inadequate." Ex. 1017, 6:24–28. Based on this disclosure of Wyman, we agree with Petitioner that "Wyman discloses that shorter paths (e.g., 802 . . .) have less load and thus require less drive, while longer paths (e.g., 804 . . .) have more load and thus require a larger drive." *See* Pet. 32.

We also have considered the following testimony from Dr. Brogioli:

> Wyman and Kim do not suggest that the two TSVs with different lengths would result in sufficiently different load to even warrant using different taps in a Wyman-style driver. For instance, load contribution from TSV "may be negligible compared to load contribution from the array dies." *See* EX1001, 4:36-38. In such situations, same driver strengths can be used and a driver circuitry like that shown in Wyman, Figure 2 will suffice.

Ex. 2023 ¶ 216. The quoted passage from the '160 patent states in full: "*In some embodiments*, the load contribution from a die interconnect may be negligible compared to the load contribution from the array dies." Ex. 1001, 4:39–41 (emphasis added).[13] Dr. Brogioli may be correct that, "[i]n such situations, same driver strengths can be used." Ex. 2023 ¶ 216. Wyman, however, expressly discloses a different situation in which the signal drive for a shorter connection "would be inadequate" for a "longer through-chip via connection" due to "increased resistance, capacitance and impedance of" the longer connection. Ex. 1017, 6:21–30.

Based on the foregoing, we find that Wyman teaches using different amounts of signal drive for different lengths of TSVs, and we turn to Patent Owner's argument that Wyman teaches using a single driver. More

[13] The same passage appears at column 4, lines 36–38 of the '060 patent, which is what Dr. Brogioli cites.

particularly, Patent Owner argues that Wyman teaches a single driver circuit with different taps at which different drive levels can be selected. PO Resp. 44–45 (citing Ex. 1017, 1:36–37, 2:66–3:1, 6:15–50; Ex. 2023 ¶ 211). Patent Owner's contentions refer to a configuration such as the one below in Figure 5 of Wyman.

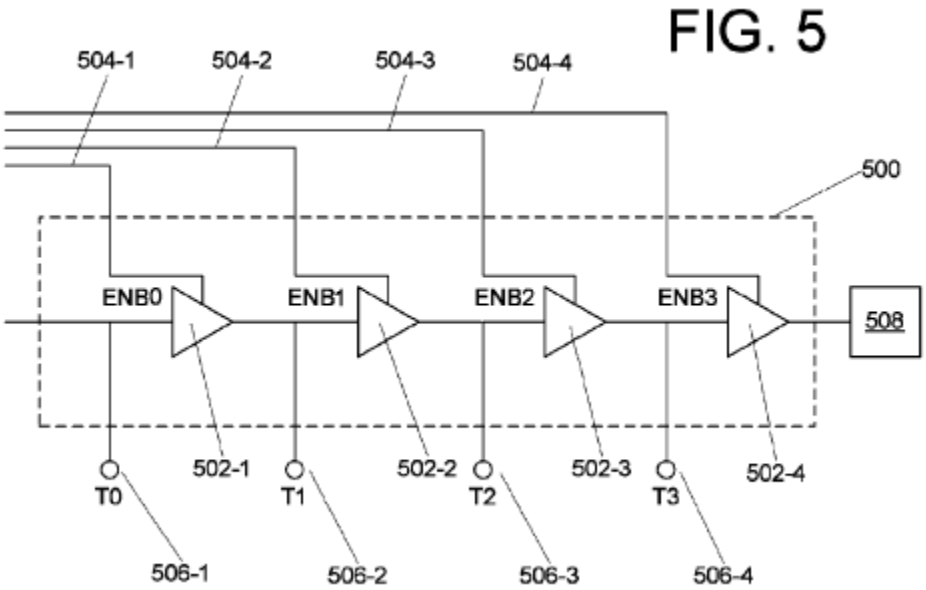

Wyman's Figure 5 above shows current drive portion 500 including driver circuits 502-1, 502-2, 502-3, and 502-4, each of which, via respective enabling leads 504-1, 504-2, 504-3, and 504-4, can be enabled, disabled, or placed in a tri state where minimal power is drawn. Ex. 1017, 3:37–41, 4:66–5:11. Wyman explains that "a designer may now utilize and tap-off at five locations (506-1 [T0], 506-2 [T1], 506-3 [T2], 506–4 [T3], 508) depending on the drive requirements for a specific element or device." Ex. 1017, 5:11–14.

According to Patent Owner, "Wyman's driver circuitry, once fabricated, would be regarded as a single driver of a given size regardless of the number of driver components used." PO Resp. 45–46 (citing Ex. 2024, 141:18–145:14, 145:24–146:7, 149:24–150:8; Ex. 2023 ¶ 215). Patent

Owner argues, therefore, that a person of ordinary skill in the art would not have used different drivers but, instead, would have used a single driver with selectable drive levels. PO Resp. 45 (citing Ex. 1017, 6:44–50; Ex. 2023 ¶¶ 213–214).

Patent Owner's proposed combination of using a single driver may be an acceptable option and may be even a better option than having separate drivers. The proposed combination, however, need not be the best option. *See Intel Corp. v. Qualcomm Inc.*, 21 F.4th 784, 800 (Fed. Cir. 2021) ("Our caselaw is clear. It's not necessary to show that a combination is 'the *best* option, only that it be a *suitable* option.'" (quoting *PAR Pharm., Inc. v. TWI Pharms., Inc.*, 773 F.3d 1186, 1197–98 (Fed. Cir. 2014))). Petitioner proposes using separate drivers in its annotation of Kim's Figure 3, which is reproduced above in this section. *See* Pet. 33–34 (asserting that a person of ordinary skill in the art would have been motivated to use "smaller drivers (navy blue) for the shorter TSV1 (light green) and larger drivers (dark green) for the longer TSV2 (teal)"), 49–50. Dr. Wolfe testifies that "you can provide a separate copy of [Wyman's] circuit 500 for each thing that needs to be driven after you analyze the current requirements." Ex. 2025, 129:2–7, *cited in* Pet. Reply 15. As noted above, Wyman teaches using different amounts of signal drive for different lengths of TSVs. We see no patentable distinction between whether the different amounts of drive come from one set of transistors that can be tapped for different drive strengths or from two different sets of transistors. *See In re Harza*, 274 F.2d 669, 671 (CCPA 1960) ("It is well settled that the mere duplication of parts has no patentable significance unless a new and unexpected result is produced . . . .").

According to Patent Owner, Petitioner's proposal to use one driver with one number of transistors and another driver with a different number of transistors "relies on nothing more than appeal to common sense, which is improper under *Arendi*." PO Sur-reply 19 (citing *Arendi SARL v. Apple Inc.*, 832 F.3d 1355 (Fed. Cir. 2016)). We disagree that Petitioner's position relies on nothing more than common sense because Wyman teaches using different amounts of signal drive for different TSVs, as discussed above. That physically separate drivers could be used to produce different amounts of drive in different paths is an unremarkable observation. *See KSR*, 550 U.S. at 421 ("Rigid preventative rules that deny factfinders recourse to common sense . . . are neither necessary under our case law nor consistent with it.").

Patent Owner and Dr. Brogioli also rely on testimony from Dr. Harold Stone, a technical expert for the Micron entities in district court litigation. *See* Ex. 2024, 141:18–145:14, 145:24–146:7, 149:24–150:8, *cited in* PO Resp. 45–46 and Ex. 2023 ¶ 215. As Patent Owner notes, this testimony concerns "an example of ten-transistor driver where a subset or all ten of the transistors can be used to drive a load." PO Resp. 45–46; *see also* PO Sur-reply 19 (parenthetical noting "when discussing the size of a 10-transistor driver that uses two transistors for some operations and ten transistors for others, Dr. Stone considers the physical dimension of the ten transistors as the driver size without ever referring to those as two drivers"). In this line of questioning, Dr. Stone confirmed that his testimony was based on a hypothetical in which you could "turn on all ten transistors," and he explained that "[i]f you can turn on all ten, the driver size is related to the load that you can drive. And if you're going to drive ten transistors, you

have to have enough area to dissipate the power they generate." Ex. 2024, 147:3–11. This testimony, therefore, does not concern the situation in which different and separate drivers drive separate loads, as in Petitioner's proposed combination discussed above.

Furthermore, although Wyman discloses that different taps can be provided to provide different drive levels, Wyman also discloses an alternative configuration in which taps are not used, as Petitioner correctly points out. *See* Pet. Reply 15 (citing Ex. 1017, 5:34–44). More particularly, Wyman discloses that its "approach could be used with a conventional drive circuit made up of multiple stages by using a via approach." Ex. 1017, 5:35–44. In this configuration, Wyman discloses forming an "electrically conductive connection to an intermediate point between stages where the current drive is adequate, as needed, and to disable any remaining downstream stage(s) by using a via to break one or more connections and leaving the via unfilled or filling the via with an insulator." Ex. 1017, 5:35–44. Thus, Wyman expressly discloses that a suitable option involves disabling unneeded transistors and not using taps to provide selectable drive levels. *See Intel*, 21 F.4th at 800. Furthermore, we find that Wyman's disclosure of providing different drive strengths with different numbers of transistors would result in drivers of different physical size, consistent with the disclosure of the '160 patent that "[t]he size of the driver may be adjusted by the selection of the transistor size and/or number of transistors included in the driver." Ex. 1001, 17:32–34; *see* Pet. Reply 15 (discussing this disclosure); *see also* Ex. 2024, 147:7–9 (Dr. Stone's testimony that "the driver size is related to the load that you can drive").

Based on the foregoing, we find that Wyman teaches using different amounts of signal drive for different lengths of TSVs and that a person of ordinary skill would have recognized that different, physically separate drivers can be used to provide those different amounts of signal drive.

f) Objective evidence of non-obviousness

We must consider any evidence of objective indicia of non-obviousness before reaching our conclusion on obviousness. *WBIP, LLC v. Kohler Co.*, 829 F.3d 1317, 1328 (Fed. Cir. 2016). This is one of the factual considerations underlying an obviousness determination. *Graham*, 383 U.S. at 17.

Patent Owner argues that the "history of commercial 3DS [(3D-Stacked)] and HBM [(high bandwidth memory)] in particular is objective evidence that the patented design is not obvious." PO Resp. 1. Patent Owner, however, does not make any arguments to establish the nexus required for consideration of secondary considerations. *See ClassCo*, 838 F.3d at 1220 ("For objective evidence of secondary considerations to be accorded substantial weight, its proponent must establish a nexus between the evidence and the merits of the claimed invention." (quotations and citation omitted)); *see also* Tr. 42:9–25 (Patent Owner confirming that it did not present an argument for secondary considerations).

Thus, the record does not contain any supportable arguments for objective indicia of non-obviousness.

g) Conclusion for Claim 1

We have considered the full trial record, and, for the reasons discussed above and based on Petitioner's contentions and evidence, we conclude that the subject matter of claim 1 would have been obvious to a

person of ordinary skill in the art based on the combined teachings of Kim, Rajan, and Wyman.

3. Dependent Claims 2–5

Claim 2 depends from claim 1 and recites "wherein the second die interconnects are longer than the first die interconnects, and wherein the second driver size is larger than the first driver size." Petitioner relies on Kim's teaching that TSV2 is longer than TSV1 and Wyman's teachings of using greater drive strength for longer TSVs. Pet. 53–54 (citing Ex. 1014, Fig. 5; Ex. 1003 ¶¶ 267–272). Referring to its arguments for independent claim 1, Patent Owner asserts that "Petitioner has not shown that a [person of ordinary skill in the art] would have used two different drivers or drivers of different sizes." PO Resp. 81. We disagree with this argument for the reasons discussed above in § II.D.2.e.

Claim 3 depends from claim 1 and recites "wherein the second die interconnects are longer than the first die interconnects, and wherein a number of array dies in the second group of at least one array die is less than a number of array dies in the first group of array dies." Petitioner argues that "it would be an obvious design choice to have an 'asymmetrical' stack" with fewer array dies in the second group than in the first group based on Kim's teaching that any number of chips may be used and Rajan's teaching that memory circuits in a stack can be symmetrical or asymmetrical. Pet. 55–56 (citing Ex. 1014 ¶¶ 27, 48, 50; Ex. 1015, 2:62–65, 7:63–67; Ex. 1003 ¶¶ 282–285). Petitioner contends that a person of ordinary skill in the art would have been motivated to arrange such an asymmetrical "stack so that a longer TSV (e.g., TSV2 in Kim) has fewer dies connected to it to reduce the power requirements of driving the longer TSV, as taught by

Wyman." Pet. 56–57 (citing Ex. 1017, 2:61–65, 6:15–30, 7:14–26, Figs. 7, 8; Ex. 1003 ¶¶ 286–288). Petitioner also argues that U.S. Patent 7,796,446 B2 (Ex. 1024 ("Ruckerbauer")) discloses an asymmetric arrangement of dies, thus "providing a further motivation for there to be fewer 'array dies in the second group' than 'in the first group of array dies.'" Pet. 56 (citing Ex. 1024, 8:58–66, 9:14–18, Fig. 5; Ex. 1003 ¶¶ 284–285).

Patent Owner disputes Petitioner's reliance on "Ruckerbauer as evidence that an asymmetric number of chips may share respective TSVs," arguing that Ruckerbauer discloses that "each TSV is connected to data port on every die" and, thus, does not show the claimed arrangement. PO Resp. 81 (citing Ex. 1024, Figs. 5A–5B; Ex. 2025, 105:11–106:7; Ex. 2023 ¶¶ 157–159, 295). We need not resolve whether Ruckerbauer's arrangement shows electrical communication with all dies because Petitioner relies on Ruckerbauer as "providing a further motivation" to create an asymmetrical stack, and we find persuasive Petitioner's other evidence for this assertion. *See* Pet. 55–56. For example, Kim discloses that "any number of main and slave chips may be used." Ex. 1014 ¶ 48; *see also* Ex. 1014 ¶ 50 ("While the semiconductor memory apparatuses having two ranks are explained with reference to FIGS. 2 and 5, a person having ordinary skill in the art will appreciate that the technical concept of the present invention can be applied to a semiconductor memory apparatus which are divided into three or more ranks."). Rajan also discloses that stacked memory circuits may be "asymmetrical." Ex. 1015, 2:62–65. Dr. Brogioli's testimony that "Rajan shows the same number of dies per group" (Ex. 2023 ¶ 295) does not account for Rajan's "asymmetrical" disclosure.

Claim 4 depends from claim 1 and recites "wherein the first driver size and the second driver size are related to a load on the first driver and a load on the second driver." Referring to its contentions for the driver limitations of claim 1 (1.e.4 and 1.e.5), Petitioner argues that it would have been obvious to a person of ordinary skill in the art "to follow Wyman's teaching of using different driver sizes corresponding to the different loads created by the TSVs of different lengths in Kim's stack." Pet. 57 (citing Ex. 1017, 7:14–26; Ex. 1003 ¶¶ 291–297).

Claim 5 depends from claim 1 and recites "wherein the control die further comprises a control circuit to control respective states of the first data conduits and the second data conduits in response to control signals received via the control terminals." Petitioner argues that Kim teaches a control circuit in rank selecting unit 1100 that control the states of the TSVs to be active or not active based on signals received from an external device. Pet. 57–58 (citing Ex. 1014 ¶¶ 32, 35–36, 38, Fig. 3; Ex. 1003 ¶¶ 298–306; Ex. 1019, 6–14, 18, 33; Ex. 1023, 9, Fig. 16; Ex. 1022, 318–20, 332–35).

Other than its arguments for independent claim 1, which we address above in § II.D.2, and the arguments we address above in this section, Patent Owner does not raise additional arguments for these claims. We have reviewed Petitioner's arguments and evidence, and we find them persuasive. Therefore, having considered the full record developed during the trial, we conclude that claims 2–5 are unpatentable as obvious over the combined teachings of Kim, Rajan, and Wyman.

4. Claims 6–9

Independent claim 6 is directed to a "memory package" and recites limitations substantially similar to subject matter recited in claims 1 and 3.

Claims 7–9 recite subject matter that is substantially similar to subject matter recited in claims 1, 2, and 5. For these claims, Petitioner refers to its contentions for similarly-recited subject matter in claims 1–3 and 5. Pet. 59. Patent Owner does not raise arguments in addition to those already addressed above.

We have reviewed Petitioner's arguments and evidence, and we find them persuasive for the reasons discussed above for claims 1–3 and 5. Therefore, having considered the full record developed during the trial, we conclude that claims 6–9 are unpatentable as obvious over the combined teachings of Kim, Rajan, and Wyman.

5. Claims 10–14 and 17–20

Below we address Petitioner's contentions for claims 10–14 and 17–20, which we find persuasive. Patent Owner does not raise arguments for these claims in addition to those already addressed above.

Independent claim 10 is directed to a "memory module operable in a computer system with a system memory controller" comprising "a register device configured to receive input command/address signals from the system memory controller and to output control signals" and "a plurality of DRAM packages." Claim 10 recites that each DRAM package comprises "data terminals via which the DRAM package communicate data signals with the system memory controller, and control terminals via which the DRAM package receive the control signals from the register device." Claim 10 also recites that each DRAM package comprises subject matter that is substantially similar to limitations 1.c–1.e.

Petitioner argues that the combination of Kim, Rajan, and Wyman teaches the subject matter of claim 10 that is not recited in claim 1, and

Petitioner refers to its claim 1 contentions for the remaining subject matter. Pet. 60–65. In particular, Petitioner argues that the combination teaches a JEDEC memory module that has a register device (Rajan's register 804). Pet. 60–62 (citing Ex. 1015, 1:28–32, 3:5–7, 4:20–24, 8:52–58, 15:3–12, Fig. 8; Ex. 1014 ¶ 50; Ex. 1019, 13, 33; Ex. 1022, 316–20, 418–19, Fig. 7.2; Ex. 1023, 9, Fig. 16; Ex. 1037, 1:34–37, Fig. 1; Ex. 1003 ¶¶ 353–368). As discussed above with respect to claim 1, we find that Rajan teaches using non-DRAM memories in a JEDEC-compliant memory package. We also find that the combination of Kim and Rajan teaches "a plurality of DRAM packages" and "a register device configured to receive input command/address signals from the system memory controller and to output control signals" because Rajan discloses "high capacity DIMM 800 using a plurality of buffered stacks of DRAM circuits 802 and a register device 804," which "performs the addressing and control of the buffered stacks." Ex. 1015, 8:52–56; *see* Pet. 62–63 (discussing this disclosure and Fig. 8 of Rajan). We also agree with Petitioner's contention, and we find, that Rajan's Figure 8 disclosure teaches data and control terminals, as recited in claim 10. *See* Pet. 63–64 (citing Ex. 1015, Fig. 8; Ex. 1019, 6–13; Ex. 1022, 418–419; Ex. 1003 ¶¶ 374–379). We find Petitioner's contentions persuasive for the remaining subject matter of claim 10 for the reasons discussed for similar limitations in claim 1.

Claim 11 recites, "The memory module of claim 10, wherein the control die receives the control signals and further includes a control circuit to control respective states of the first data conduits and the second data conduits in response to the control signals." Petitioner refers to its contentions for claim 5, which recites similar subject matter. Pet. 65.

Claim 12 recites, "The memory module of claim 11, wherein the control signals include data path control signals generated by the register device, the data path control signals being used to control the respective states of the first data conduits and the second data conduits." Petitioner argues that chip select and read/write command signals would be used per JEDEC to control the direction of data transfer. Pet. 65–67 (citing Ex. 1014 ¶¶ 31–38, Fig. 3; Ex. 1019, 6–14, 18, 33; Ex. 1023, 9, Fig. 16; Ex. 1022, 318–20, 332–35; Ex. 1003 ¶¶ 401–407).

Claim 13 recites, "The memory module of claim 11, wherein the control die is configured to generate data path control signals from at least some of the control signals, the data path control signals being used to control the respective states of the first data conduits and the second data conduits." As with claim 12, Petitioner cites chip select and read/write signals as controlling the direction of data transfer. Pet. 68 (citing Ex. 1014 ¶¶ 37–38; Ex. 1003 ¶¶ 401–416).

Claim 14 recites, "The memory module of claim 10, wherein the control signals include address signals and the control die provides the address signals to the plurality of array dies." Petitioner argues that Rajan's "Address & Control" signals (Fig. 8) are received at the memory module and that address signals are sent to the dies to identify where to store or retrieve data. Pet. 68–72 (citing Ex. 1014 ¶¶ 29–30, 32, 38; Ex. 1015, 14:11–18, 14:55–60, Figs. 4, 18; Ex. 1019, 6–13, 18, 33; Ex. 1022, 318–20, 332–35; Ex. 1023, 9, Fig. 6; Ex. 1003 ¶¶ 418–434).

Claim 17 recites, "The memory module of claim 10, wherein the first driver size and the second driver size are related to a first load on the first

driver and a second load on the second driver." Petitioner refers to its contentions for claim 4, which recites similar subject matter. Pet. 78.

Claim 18 recites, "The memory module of claim 10, wherein the control signals include command/address signals, and the control die includes buffers to control the timing of the command/address signals." Petitioner argues that Rajan teaches delaying signals by two clock cycles and that a person of ordinary skill in the art would have implemented such a delay in Kim to emulate JEDEC. Pet. 78–79 (citing Ex. 1015, 9:46–10:27, Fig. 11; Ex. 1019, 23–24; Ex. 1003 ¶¶ 483–490).

Claim 19 recites, "The memory module of claim 10, wherein the control die includes data buffers to control the timing of the data signals." Petitioner cites Rajan's disclosure of controlling the CAS latency timing. Pet. 79–80 (citing Ex. 1015, 8:59–9:45, Fig. 9; Ex. 1019, 23–24; Ex. 1003 ¶¶ 491–496).

Claim 20 recites, "The memory module of claim 10, wherein the first group of array dies include a greater number of array dies than the second group of at least one array die." Petitioner refers to its contentions for claim 3, which recites similar subject matter. Pet. 80.

As noted above, Patent Owner does not raise additional arguments for these claims. We have reviewed Petitioner's arguments and evidence, and we find them persuasive. Therefore, having considered the full record developed during the trial, we conclude that claims 10–14 and 17–20 are unpatentable as obvious over the combined teachings of Kim, Rajan, and Wyman.

6. Claims 15 and 16

Claim 15 recites,

> The memory module of claim 10, wherein the input command/address signals include first chip select signals, wherein the register device is configured to perform rank multiplication by generating second chip select signals from at least some of the input command/address signals, the second chip select signals having a number of chip select signals greater than the first chip select signals and equal to a number of array dies in the plurality of array dies, and wherein the DRAM package further comprises chip select die interconnects for conducting the second chip select signals to respective ones of the plurality of array dies.

Petitioner argues that chip select signals are received as part of JEDEC, and Petitioner relies on Rajan's disclosure of using separate chip select signals for each chip to show rank multiplication. Pet. 72–73 (citing Ex. 1015, 3:27–30, 6:30–7:67, 8:6–13, 8:56–58; Ex. 1014 ¶¶ 32, 38; Ex. 1003 ¶¶ 436–450); *see also* Pet. 8–11 (explaining rank multiplication as known in the art). Petitioner further argues that it would have been obvious to use chip select die interconnects to conduct chip select signals based on, among other things, Rajan's disclosure of using separate chip signals for each chip. Pet. 73–76 (citing Ex. 1014 ¶¶ 29–30, 49, Figs. 2, 5; Ex. 1015, 6:34–48, Fig. 4; Ex. 1019, 12–13, Fig. 2; Ex. 1022, 319, Ex. 1023, 2–4, 9; Ex. 1016 ¶ 38; Ex. 1003 ¶¶ 451–461).

Claim 16 recites,

> The memory module of claim 10, wherein the control signals include output command/address signals derived from the input command/address signals, the output command/address signals including first chip select signals, wherein the control die is further configured to perform rank multiplication by generating second chip select signals from at least some of the output command/address signals, the second chip select signals having

> a number of chip select signals greater than the first chip select signals and equal to a number of array dies in the plurality of array dies, and wherein the DRAM package further comprises chip select die interconnects for conducting the second chip select signals to respective ones of the plurality of array dies.

Petitioner's contentions here are similar to its contentions for claim 15. *See* Pet. 76–78.

Patent Owner argues that "Petitioner has not shown that its relied-on non-DRAM chips would utilize chip-select signals." PO Resp. 51–52 (citing Ex. 2023 ¶¶ 169–171, 193; Ex. 1015, 6:34–38; Exs. 2043, 2044). Patent Owner asserts that "[t]here is also no evidence that the concept of 'rank'/'rank multiplication,' would apply to non-DRAM memory systems." PO Resp. 52 n.8 (citing Ex. 1022, 413). We address these arguments above in § II.D.2.d.2 and disagree with them for the reasons explained above.

Patent Owner also argues that "TSVs that penetrate through multiple chips were difficult and expensive to form at the time of the invention" and that "one failed TSV would cause the entire die stack to be discarded." PO Resp. 52 (citing Ex. 2023 ¶¶ 195–196; Ex. 2007; Ex. 2046). Patent Owner includes a parenthetical regarding "a JEDEC presentation that indicated commercially viable speed bin yield would not be viable until 2016." PO Resp. 52 (citing Ex. 2046). According to Patent Owner, a person of ordinary skill in the art "would not have incurred the cost or the risk to build TSVs that are not needed for the memory chips' operation." PO Resp. 52 (citing Ex. 2023 ¶¶ 195–196). The evidence of record shows that a known configuration was to have multiple dies sharing TSVs, as discussed above in § II.D.2.d.2. *See* Ex. 1025 (Foster); *see also* Ex. 2023 ¶ 164 (Dr. Brogioli testifying with respect to Foster about "the dies forming the substack that shares a TSV"). The record evidence shows that using TSVs was within the

skill of a person of ordinary skill in the art. *See* Exs. 1014 (Kim), 1025 (Foster). We find that this evidence shows that the use of TSVs was an obvious option for a person of ordinary skill in the art, notwithstanding Patent Owner's commercial viability arguments. *See Uber Technologies, Inc. v. X One, Inc.*, 957 F.3d 1334, 1340 (Fed. Cir. 2020) ("Because a person of ordinary skill 'has good reasons to pursue the known options within his or her technical grasp,' § 103 bars the patentability of such obvious variations." (quoting *KSR*, 550 U.S. at 421)); *cf. CFMT, Inc. v. Yieldup Int'l Corp.*, 349 F.3d 1333, 1338 (Fed. Cir. 2003) ("Title 35 does not require that a patent disclosure enable one of ordinary skill in the art to make and use a perfected, commercially viable embodiment absent a claim limitation to that effect.").

We find Petitioner's contentions for claims 15 and 16 persuasive. Rajan discloses the following:

> If the buffer chip is emulating a memory device which has a larger capacity than each of the physical DRAM chips in the stack, the buffer chip may receive from the host system's memory controller more address bits than are required to address any given one of the DRAM chips. In this instance, the extra address bits may be decoded by the buffer chip to individually select the DRAM chips, utilizing separate chip select signals (not shown) to each of the DRAM chips in the stack.

Ex. 1015, 6:30–38. We agree with Petitioner that this disclosure teaches rank multiplication that results in a number of "second chip select signals" that equals the number of array dies, as recited in claims 15 and 16. *See* Pet. 72–73; *see also* Ex. 1003 ¶¶ 445–447 (explaining that Rajan's disclosure in column 6, lines 34–38 shows rank multiplication). This meets the claim interpretation discussed above in § II.C.2 because each chip has its own chip select signal such that none of the second chip select signals enables multiple dies at once.

Based on Petitioner's persuasive contentions and evidence, summarized above, and for the reasons discussed above, we conclude that claims 15 and 16 are unpatentable as obvious over the combined teachings of Kim, Rajan, and Wyman.

E. Patent Owner's Procedural Arguments

Patent Owner makes various procedural arguments with which we disagree as discussed below.

1. Alleged Improper Incorporation by Reference

Patent Owner asserts that, "[t]hroughout the Petition, Petitioner tries to evade the word limit by including no substantive analysis in the Petition itself, but attempting to incorporate paragraphs and paragraphs of its expert's declaration." PO Resp. 19. As example, Patent Owner notes that "Petitioner devotes two paragraphs in Ground 1" for limitations 1.d.1. and 1.d.2 but cites eleven paragraphs of its expert declaration. PO Resp. 19. Patent Owner asserts that "[t]his is improper, and such arguments should be deemed as absent from the Petition itself." PO Resp. 19.

We disagree with Patent Owner that there is "no substantive analysis" for certain limitations, and we refer to our findings above as to the Petition's analysis. Furthermore, there is no prohibition on expert declarations that provide more discussion of claim limitations than a petition. Indeed, our Rules provide that "[e]xpert testimony that does not disclose the underlying facts or data on which the opinion is based is entitled to little or no weight." 37 C.F.R. § 42.65(a). Thus, an expert declaration should provide the necessary factual bases underlying the declarant's opinion, and the expert is not limited to only what a petitioner asserts in a petition.

2. Alleged Improper New Arguments

Patent Owner argues that having each die in the stack in a separate rank with its own chip select signal is a "new argument" that we should not consider. PO Sur-reply 22. At oral argument, Patent Owner's counsel stated, "I heard so many times, I couldn't count, oh, our combination is a chip select for each die. So, in Riho, that would be 16 chip selects, and in Kim plus Rajan, that would be a chip select for each separate chip. That is nowhere in their petition." Tr. 36:25–37:2.

We disagree with Patent Owner because the Petition cites Rajan's disclosure of providing a separate chip select signal for each chip in the stack for claims 15 and 16. *See* Pet. 72, 78 (citing Ex. 1015, 6:34–38). Thus, Patent Owner's contention that this is "nowhere in their petition" is incorrect. Petitioner's reliance on this disclosure for claim 1 in the Reply was an appropriate response to Patent Owner's arguments about collisions. *See Apple Inc. v. Andrea Elecs. Corp.*, 949 F.3d 697, 706 (Fed. Cir. 2020) ("[A]ny ambiguity as to whether Apple raised a new argument on reply is eliminated when we consider whether Apple's reply arguments are responsive to arguments raised in Andrea's Patent Owner Response.").

Patent Owner is also incorrect in asserting that having each die in the stack in a separate rank is a new argument. The Petition states the following:

> [W]hen implementing "rank multiplication" (discussed above, pp.8-11), it was common to use a "fork-in-the-road" arrangement with two data buses for two ranks of memory devices (shown below left, yellow and orange), with the option of adding two additional ranks of memory devices (*resulting in four ranks*) to the existing data busses (shown below right, two yellow, two orange), meaning two memory dies (e.g., two orange) would share a given data bus.

Pet. 31 (emphasis added; citing Ex. 1003 ¶ 161; Ex. 1026, Figs. 12–13). This passage refers to annotated versions of Figures 12 and 13 of U.S. Patent Application Publication No. 2006/0277355 A1 (Ex. 1026 ("Ellsberry")). Thus, the Petition expressly proposes four separate ranks in the combination. *See also* Pet. 8 (discussing rank multiplication and citing Ex. 1015, 6:30–7:67 (Rajan's disclosure of using separate chip select signals for each chip)). Indeed, Patent Owner's declarant Dr. Brogioli testifies that, "in Ellsberry, the 4 ranks are in four separate physical ranks." Ex. 2023 ¶ 111. Petitioner, therefore, put Patent Owner on notice of its contention of using separate ranks. The passage quoted above also expressly states that "it was common to use a 'fork-in-the-road' arrangement." Pet. 31. Thus, we also disagree with Patent Owner's assertions that "fork in the road" is not in the Petition. *See, e.g.*, Tr. 37:4–7 ("The concept of a fork in the road is the magical elixir that makes clear that Rajan has a shared data interconnect, data terminal, and that the prior art references would share that data terminal. That is nowhere in the petition or the declaration."); 70:16–17 ("Where does the fork in the road . . . appear in their petition? It does not.").

Patent Owner also asserts that Petitioner's arguments about known solutions to collisions are "new arguments that should be disregarded." PO Sur-reply 3; *see also* PO Sur-reply 17–18 (asserting that Petitioner's "suggest[ion] that Kim's timing for read and write operations would change in the Kim-Rajan combination . . . is a new theory"). We disagree. Patent Owner asserts in its Response that having dies share a TSV would result in collisions. PO Resp. 32–44. In this case, Petitioner's arguments that there were known solutions to data collision issues are directly responsive to Patent Owner's collision arguments. *See Apple*, 949 F.3d at 706; *see also*

Rembrandt Diagnostics, LP v. Alere, Inc., 76 F.4th 1376, 1385 (Fed. Cir. 2023) (finding proper a "reply argument discussing cost and time savings [that] has a nexus to [a] prior argument and is responsive").

Furthermore, Petitioner's discussion of the skilled artisan's knowledge of collision avoidance solutions is proper because it "it is used 'to document the knowledge that skilled artisans would bring to bear in reading the prior art identified as producing obviousness.'" *Anacor Pharms., Inc v. Iancu*, 889 F.3d 1372, 1380–81 (Fed. Cir. 2018) (quoting *Genzyme Therapeutic Prods. Ltd. P'ship v. Biomarin Pharm. Inc.*, 825 F.3d 1360, 1369 (Fed. Cir. 2016)).

We also find Petitioner's reliance on *Lockwood* to be appropriate in pointing out that the prior art contains more detail on avoiding collisions than the '160 patent, which is directly responsive to Patent Owner's criticisms of the asserted combination. *See* Pet. Reply 13 (citing *Lockwood*, 107 F.3d at 1570); *but see* Tr. 39:3–9 (Patent Owner's counsel's assertion that "[t]his Lockwood argument, an argument just like essentially every argument that was made by Samsung in this oral argument was an argument in reply. And the reason why it was put in reply is so their expert can't have been tested on it, because if he would have been tested upon it, he would have told the truth, which is that there's a basic physics behind the speed at which a given memory die can clear a load or clear a read.").

Patent Owner also asserts that Petitioner's argument that a person of ordinary skill in the art "could fabricate drivers of different sizes for different TSVs" rather than using "a single driver circuitry" is "a new argument." PO Sur-reply 19. Petitioner's reliance on different drivers of different sizes is not a new theory because the Petition expressly asserts this

and illustrates it, as discussed above in § II.D.2.e. In particular, Petitioner asserts that a person of ordinary skill in the art "would have been motivated to implement Wyman's teachings in Kim to improve power efficiency by using smaller drivers (navy blue) for the shorter TSV1 (light green) and larger drivers (dark green) for the longer TSV2 (teal), as shown below," referring to an annotated version of a portion of Kim's Figure 3. Pet. 33–34; *see also* Pet. 50 (illustrating separate drivers). Patent Owner acknowledges as much by arguing that a person of ordinary skill in the art "would not have even used different drivers to drive TSV1 and TSV2 *as asserted*." PO Resp. 45 (emphasis added). Thus, our Decision relies on the Petition's express assertions of separate drivers.

Patent Owner further asserts that reliance on non-DRAM devices such as NAND flash and SRAM is improper and "a complete violation of due process" because "the petition makes no discussion of NAND Flash and no discussion of SRAM as being a basis for the combination." Tr. 55:12–17. We disagree. Before institution, we authorized Petitioner to file a preliminary reply addressing the district court's construction of "array dies," and we authorized Patent Owner to file a preliminary sur-reply. Ex. 3001. In the preliminary reply, Petitioner cited disclosure in Rajan that allows for "any type of memory whatsoever" to be used, including NAND flash and SRAM. Paper 9 at 3 (quoting Ex. 1015, 15:3–9). The Petition also cites this disclosure. *See* Pet. 60 (citing Ex. 1015, 15:3–12). The Decision on Institution discussed this disclosure in view of Patent Owner's argument that array dies must be different from Rajan137's DRAM circuits. Inst. Dec. 24–25. Thus, Patent Owner was provided with notice and an opportunity to be heard. *See Apple Inc. v. Corephotonics, Ltd.*, 81 F.4th

1353, 1361 (Fed. Cir. 2023) (stating that the Board's "decisions must be reached only after the parties have been provided fair notice and an opportunity to be heard").

F. Obviousness over Riho, Rajan, and Riho2 (Claims 1–20)

Because we determine that all challenged claims are unpatentable as discussed above, we need not separately assess the ground of unpatentability based on the combination of Riho, Rajan, and Riho2. 35 U.S.C. § 318(a) ("If an inter partes review is instituted and not dismissed under this chapter, the Patent Trial and Appeal Board shall issue a final written decision with respect to the patentability of any patent claim challenged by the petitioner and any new claim added under section 316(d)."); *Bos. Sci. Scimed, Inc. v. Cook Grp. Inc.*, 809 F. App'x 984, 990 (Fed. Cir. 2020) (nonprecedential) ("We agree that the Board need not address issues that are not necessary to the resolution of the proceeding.").

III. PETITIONER'S MOTION TO EXCLUDE

Petitioner filed a Motion to Exclude Exhibits 2024 and 2026–2031. Paper 34. Because we do not rely on this evidence in a manner adverse to Petitioner, we dismiss the Motion to Exclude as moot.

IV. CONCLUSION[14]

For the reasons discussed above, we determine that Petitioner has proven, by a preponderance of the evidence, that claims 1–20 of the '160 patent are unpatentable, as summarized in the following table:

Claim(s)	35 U.S.C. §	Reference(s)/Basis	Claims Shown Unpatentable	Claims Not Shown Unpatentable
1–20	103(a)	Kim, Rajan, Wyman	1–20	
1–20	103(a)	Riho, Rajan, Riho2[15]		
Overall Outcome			1–20	

[14] Should Patent Owner wish to pursue amendment of the challenged claims in a reissue or reexamination proceeding subsequent to the issuance of this decision, we draw Patent Owner's attention to the April 2019 *Notice Regarding Options for Amendments by Patent Owner Through Reissue or Reexamination During a Pending AIA Trial Proceeding*. *See* 84 Fed. Reg. 16,654 (Apr. 22, 2019). If Patent Owner chooses to file a reissue application or a request for reexamination of the challenged patent, we remind Patent Owner of its continuing obligation to notify the Board of any such related matters in updated mandatory notices. *See* 37 C.F.R. § 42.8(a)(3), (b)(2).

[15] As explained above, because we determine that the challenged claims are unpatentable based on the combination of Kim, Rajan, and Wyman, we decline to address this ground.

V. ORDER

Accordingly, it is

ORDERED that claims 1–20 of the '160 patent have been shown to be unpatentable;

FURTHER ORDERED that Petitioner's Motion to Exclude (Paper 34) is *dismissed*; and

FURTHER ORDERED that, because this is a Final Written Decision, parties to the proceeding seeking judicial review of the Decision must comply with the notice and service requirements of 37 C.F.R. § 90.2.

For PETITIONER:

Eliot D. Williams
Theodore W. Chandler
Ferenc Pazmandi
Michael E. Knierim
Brianna L. Potter
BAKER BOTTS L.L.P.
eliot.williams@bakerbotts.com
ted.chandler@bakerbotts.com
ferenc.pazmandi@bakerbotts.com
michael.knierim@bakerbotts.com
brianna.potter@bakerbotts.com

For PATENT OWNER:

Hong Annita Zhong
IRELL & MANELLA
hzhong@irell.com

EXHIBIT B

Trials@uspto.gov
571-272-7822

Paper 52
Date: June 17, 2024

UNITED STATES PATENT AND TRADEMARK OFFICE

BEFORE THE OFFICE OF THE DEPUTY UNDER SECRETARY OF COMMERCE FOR INTELLECTUAL PROPERTY AND DEPUTY DIRECTOR OF THE UNITED STATES PATENT AND TRADEMARK OFFICE

SAMSUNG ELECTRONICS CO., LTD., MICRON TECHNOLOGY, INC., MICRON SEMICONDUCTOR PRODUCTS, INC., and MICRON TECHNOLOGY TEXAS LLC,[1]
Petitioner,

v.

NETLIST, INC.,
Patent Owner.

IPR2022-01427 (Patent 9,318,160 B2)
IPR2022-01428 (Patent 8,787,060 B2)

Before DERRICK BRENT,[2] *Deputy Under Secretary of Commerce for Intellectual Property and Deputy Director of the United States Patent and Trademark Office*.

---

[1] Micron Technology, Inc., Micron Semiconductor Products, Inc., and Micron Technology Texas LLC filed petitions in IPR2023-00882 and IPR2023-00883 and were joined as parties to these proceedings. *See* IPR2022-01427, Paper 25; IPR2022-01428, Paper 25.

[2] Katherine K. Vidal, Under Secretary of Commerce for Intellectual Property and Director of the United States Patent and Trademark Office, took no part in this decision. The Director's authority is delegated to Derrick Brent, Deputy Under Secretary of Commerce for Intellectual Property and Deputy Director of the United States Patent and Trademark Office, by operation of

ORDER

The Office received a request for Director Review of the Final Written Decision in each of the above-captioned cases. *See* IPR2022-01427, Paper 50; Ex. 3100; IPR2022-01428, Paper 50; Ex. 3100. Director Vidal is recused from this matter, and the request was referred to me.

Upon consideration of the request, it is:

ORDERED that the requests for Director Review are denied; and

FURTHER ORDERED that the Patent Trial and Appeal Board's Final Written Decision in these cases is the final decision of the agency.

---

the Director's Memorandum § II. c. *See* Director's Memorandum, Procedures for Recusal to Avoid Conflicts of Interest and Delegations of Authority (Apr. 20, 2022) (Recusal Procedure Memo), available at www.uspto.gov/sites/default/files/documents/Director-Memorandum-on-Recusal-Procedures.pdf.

IPR2022-01427 (Patent 9,318,160 B2)
IPR2022-01428 (Patent 8,787,060 B2)

For PETITIONER:

Eliot D. Williams
Theodore W. Chandler
Ferenc Pazmandi
Michael E. Knierim
Brianna L. Potter
BAKER BOTTS LLP
Eliot.williams@bakerbotts.com
Ted.chandler@bakerbott.com
Ferenc.pazmandi@bakerbotts.com
michael.knierim@bakerbotts.com
Brianna.potter@bakerbotts.com

Matthew Hopkins
WINSTON & STRAWN LLP
mhopkins@winston.com

For PATENT OWNER:

Hong Annita Zhong
IRELL & MANELLA LLP
hzhong@irell.com