No. 24-2203

IN THE

United States Court of Appeals

FOR THE FEDERAL CIRCUIT

NETLIST, INC.,

Plaintiff-Appellee,

v.

SAMSUNG ELECTRONICS CO., LTD., SAMSUNG ELECTRONICS AMERICA, INC., SAMSUNG SEMICONDUCTOR, INC.,

Defendants-Appellants.

On Appeal from the U.S. District Court
for the Eastern District of Texas
No. 2:21-cv-00463, Judge J. Rodney Gilstrap

RESPONSE BRIEF FOR APPELLEE NETLIST, INC.

Elizabeth Kathleen Clarke
Bonnie K. St. Charles
MOLOLAMKEN LLP
300 N. LaSalle Street, Suite 5350
Chicago, IL 60654
(312) 450-6700

Jeffrey A. Lamken
Michael Gregory Pattillo, Jr.
Kayvon Ghayoumi
MOLOLAMKEN LLP
The Watergate, Suite 500
600 New Hampshire Avenue, N.W.
Washington, D.C. 20037
(202) 556-2000
jlamken@mololamken.com

Counsel for Appellee Netlist, Inc.

REPRESENTATIVE PATENT CLAIMS

U.S. Patent No. 11,016,918

1. A memory module comprising:

a printed circuit board (PCB) having an interface configured to fit into a corresponding slot connector of a host system, the interface including a plurality of edge connections configured to couple power, data, address and control signals between the memory module and the host system;

a first buck converter configured to provide a first regulated voltage having a first voltage amplitude;

a second buck converter configured to provide a second regulated voltage having a second voltage amplitude;

a third buck converter configured to provide a third regulated voltage having a third voltage amplitude;

a converter circuit configured to provide a fourth regulated voltage having a fourth voltage amplitude; and

a plurality of components coupled to the PCB, each component of the plurality of components coupled to one or more regulated voltages of the first, second, third and fourth regulated voltages, the plurality of components comprising:

a plurality of synchronous dynamic random access memory (SDRAM) devices coupled to the first regulated voltage, and

at least one circuit coupled between a first portion of the plurality of edge connections and the plurality of SDRAM devices, the at least one circuit operable to (i) receive a first plurality of address and control signals via the first portion of the plurality of edge connections, and (ii) output a second plurality of address and control signals to the plurality of SDRAM devices, the at least one circuit coupled to both the second regulated voltage and the fourth regulated voltage, wherein a first one of the second and fourth voltage amplitudes is less than a second one of the second and fourth voltage amplitudes.

U.S. Patent No. 11,232,054

16. A memory module comprising:

a printed circuit board (PCB) having an interface configured to fit into a corresponding slot connector of a host system;

a voltage conversion circuit coupled to the PCB and configured to provide a plurality of regulated voltages, wherein the voltage conversion circuit includes three buck converters each of which is configured to produce a regulated voltage of the plurality of regulated voltages;

a plurality of components coupled to the PCB, each component of the plurality of components coupled to at least one regulated voltage of the plurality of regulated voltages, the plurality of components including a plurality of synchronous dynamic random access memory (SDRAM) devices, the plurality of SDRAM devices coupled to a first regulated voltage of the plurality of regulated voltages; and

a controller coupled to the PCB, the controller including a voltage monitor circuit coupled to an input voltage received from the host system via the interface, the voltage monitor circuit configured to detect an amplitude change in the input voltage, wherein, in response to the voltage monitor detecting an amplitude change in the input voltage, the memory module transitions from a first operable state to a second operable state.

U.S. Patent No. 10,949,339

1. A N-bit-wide memory module mountable in a memory socket of a computer system and configurable to communicate with a memory controller of the computer system via address and control signal lines and N-bit wide data signal lines, the N-bit wide data signal lines including a plurality of sets of data signal lines, each set of data signal lines is a byte wide, the memory module comprising:

a printed circuit board (PCB) having an edge connector comprising a plurality of electrical contacts which are positioned on an edge of the PCB and configured to be releasably coupled to corresponding contacts of the memory socket;

double data rate dynamic random access memory (DDR DRAM) devices coupled to the PCB and arranged in multiple N-bit-wide ranks;

a module controller coupled to the PCB and operatively coupled to the DDR DRAM devices, wherein the module controller is configurable to receive from the memory controller via the address and control signal lines input address and control signals for a memory write operation to write N-bit-wide write data from the memory controller into a first N-bit-wide rank of the multiple N-bit-wide ranks, and to output registered address and control signals in response to receiving the input address and control signals, wherein the registered address and control signals cause the first N-bit-wide rank to perform the memory write operation by receiving the N-bit-wide write data, wherein the module controller is further configurable to output module control signals in response to at least some of the input address and control signals; and

a plurality of byte-wise buffers coupled to the PCB and configured to receive the module control signals, wherein each respective byte-wise buffer of the plurality of byte-wise buffers has a first side configured to be operatively coupled to a respective set of data signal lines, a second side that is operatively coupled to at least one respective DDR DRAM device in each of the multiple N-bit-wide ranks via respective module data lines, and a byte-wise data path between the first side and the second side, wherein the each respective byte-wise buffer is disposed on the PCB at a respective position corresponding to the respective set of the plurality of sets of data signal lines;

wherein the each respective byte-wise buffer further includes logic configurable to control the byte-wise data path in response to the module control signals, wherein the byte-wise data path is enabled for a first time period in accordance with a latency parameter to actively drive a respective byte-wise section of the N-bit wide write data associated with the memory operation from the first side to the second side during the first time period; and

wherein the byte-wise data path includes first tristate buffers, and the logic in response to the module control signals is configured to enable the first tristate buffers to drive the respective byte-wise section of the N-bit wide write data to the respective module data lines during the first time period.

U.S. Patent No. 8,787,060

1. A memory package, comprising:

a plurality of input/output terminals via which the memory package communicates data and control/address signals with one or more external devices;

a plurality of stacked array dies including a first group of array dies and a second group of at least one array die, each array die having data ports;

at least a first die interconnect and a second die interconnect, the first die interconnect in electrical communication with the first group of array dies and not in electrical communication with the second group of at least one array die, the second die interconnect in electrical communication with the second group of at least one array die and not in electrical communication with the first group of array dies; and

a control die comprising at least a first data conduit between the first die interconnect and a first terminal of the plurality of input/output terminals, and at least a second data conduit between the second die interconnect and the first terminal, the first terminal being a data terminal, the control die further comprising a control circuit to control respective states of the first data conduit and the second data conduit in response to control signals received via one or more second terminals of the plurality of terminals.

U.S. Patent No. 9,318,160

1. A memory package, comprising:

data terminals and control terminals;

stacked array dies including a first group of array dies and a second group of at least one array die;

first die interconnects and second die interconnects, the first die interconnects in electrical communication with the first group of array dies and not in electrical communication with the second group of at least one array die, the second die interconnects in electrical communication with the second group of at least one array die and not in electrical communication with the first group of array dies; and

a control die comprising first data conduits between the first die interconnects and the data terminals, and second data conduits between the second die interconnects and the data terminals, the first data conduit including first drivers each having a first driver size and configured to drive a data signal from a corresponding data terminal to the first group of array dies, the second data conduit including second drivers each having a second driver size and configured to drive a data signal from a corresponding data terminal to the second group of at least one array die, the second driver size being different from the first driver size.

5. The memory package of claim 1, wherein the control die further comprises a control circuit to control respective states of the first data conduits and the second data conduits in response to control signals received via the control terminals.

UNITED STATES COURT OF APPEALS FOR THE FEDERAL CIRCUIT

CERTIFICATE OF INTEREST

Case Number 2024-2203

Short Case Caption Netlist, Inc. v. Samsung Electronics Co., Ltd.

Filing Party/Entity Netlist, Inc.

Instructions:

1. Complete each section of the form and select none or N/A if appropriate.
2. Please enter only one item per box; attach additional pages as needed, and check the box to indicate such pages are attached.
3. In answering Sections 2 and 3, be specific as to which represented entities the answers apply; lack of specificity may result in non-compliance.
4. Please do not duplicate entries within Section 5.
5. Counsel must file an amended Certificate of Interest within seven days after any information on this form changes. Fed. Cir. R. 47.4(c).

I certify the following information and any attached sheets are accurate and complete to the best of my knowledge.

Date: 3/28/2025

Signature: /s/ Jeffrey A. Lamken

Name: Jeffrey A. Lamken

1. Represented Entities. Fed. Cir. R. 47.4(a)(1).	**2. Real Party in Interest.** Fed. Cir. R. 47.4(a)(2).	**3. Parent Corporations and Stockholders.** Fed. Cir. R. 47.4(a)(3).
Provide the full names of all entities represented by undersigned counsel in this case.	Provide the full names of all real parties in interest for the entities. Do not list the real parties if they are the same as the entities. ☑ None/Not Applicable	Provide the full names of all parent corporations for the entities and all publicly held companies that own 10% or more stock in the entities. ☑ None/Not Applicable
Netlist, Inc.		

☐ Additional pages attached

4. Legal Representatives. List all law firms, partners, and associates that (a) appeared for the entities in the originating court or agency or (b) are expected to appear in this court for the entities. Do not include those who have already entered an appearance in this court. Fed. Cir. R. 47.4(a)(4).

☐ None/Not Applicable ☑ Additional pages attached

5. Related Cases. Other than the originating case(s) for this case, are there related or prior cases that meet the criteria under Fed. Cir. R. 47.5(a)?

☑ Yes (file separate notice; see below) ☐ No ☐ N/A (amicus/movant)

If yes, concurrently file a separate Notice of Related Case Information that complies with Fed. Cir. R. 47.5(b). **Please do not duplicate information.** This separate Notice must only be filed with the first Certificate of Interest or, subsequently, if information changes during the pendency of the appeal. Fed. Cir. R. 47.5(b).

6. Organizational Victims and Bankruptcy Cases. Provide any information required under Fed. R. App. P. 26.1(b) (organizational victims in criminal cases) and 26.1(c) (bankruptcy case debtors and trustees). Fed. Cir. R. 47.4(a)(6).

☑ None/Not Applicable ☐ Additional pages attached

Attachment to Appellee's Certificate of Interest in
***Netlist, Inc. v. Samsung Electronics Co., Ltd.*, No. 2024-2203**

4. Legal Representatives. List all law firms, partners, and associates that (a) appeared for the entities in the originating court or agency or (b) are expected to appear in this court for the entities. Do not include those who have already entered an appearance in this court. Fed. Cir. R. 47.4(a)(4).

IRELL & MANELLA LLP: Rebecca L. Carson; Nora Isabella Chestney; Erick Roger Franklund; Lisa Sharrock Glasser; Michael David Harbour; Dovid Z. Kahn; Benjamin Monnin; Stephen M. Payne; Michael Meir Rosen; Jason G. Sheasby; Andrew J. Strabone; Michael William Tezyan; Thomas C. Werner; Yanan Zhao; Hong Annita Zhong.

MCKOOL SMITH, P.C.: Samuel Franklin Baxter; Kevin Lee Burgess; Jennifer Leigh Truelove.

LEE HONG DEGERMAN KANG & WAIMEY: Soo A. Hong; Peter Rho.

TABLE OF CONTENTS

Page

INTRODUCTION 1

STATEMENT OF ISSUES 2

STATEMENT OF THE CASE 2

I. Technological Background 2

A. Conventional Server Memory 3

B. Capacity, Reliability, Load, and Noise Problems 4

C. Netlist Advances Memory-Module Technology 5

1. The ’060 and ’160 Patents Improve Memory Capacity Without Sacrificing Speed 5

2. The ’918 and ’054 Patents Improve Reliability and Power-Efficiency 9

3. The ’339 Patent Increases Capacity Without Sacrificing Speed 10

II. Procedural History 12

A. Samsung’s Infringement of the ’060 and ’160 Patents 12

B. Samsung’s Infringement of the ’918 and ’054 Patents 14

C. Samsung’s Infringement of the ’339 Patent 15

D. Damages 18

SUMMARY OF ARGUMENT 21

STANDARD OF REVIEW 24

ARGUMENT 24

I. Substantial Evidence Supports the Infringement Verdict on the ’060 and ’160 Patents 25

A. Substantial Evidence Supports the Jury’s Finding That the Accused Products Contain “Array Dies” 25

1. The Jury’s Finding That the Accused Devices Contain “Array Dies,” Not “DRAM Circuits,” Is Amply Supported 25

2. Samsung’s Efforts To Re-Litigate the Meaning of “DRAM Circuit” on Appeal Fail 29

B. Samsung’s Prosecution-History Arguments Fail 32

II. Substantial Evidence Supports the Infringement Verdict on the ’918 and ’054 Patents 34

A. Substantial Evidence Supports the Jury’s Finding That Samsung Infringes the ’054 Patent 35

B. Substantial Evidence Supports the Jury’s Finding That Samsung Infringes the ’918 Patent 38

III. Substantial Evidence Supports the Infringement Verdict on the ’339 Patent 40

A. Samsung’s Challenge Is Moot 41

B. Substantial Evidence Supports the Jury’s Finding That Half-Byte Paths Are “Byte-Wise Data Paths” 43

IV. Substantial Evidence Supports the Jury’s Damages Award 45

A. Netlist’s Damages Case Was Methodologically Sound and Amply Supported 46

B. Kennedy Properly Allocated Netlist the Incremental Revenue Attributable to the Patented Features 49

1. Kennedy Was Entitled To Base the Royalty on Revenues, Rather Than Profits 49

2. Kennedy Did Not Apply a "100%-of-Revenue Rule of Thumb" 52

3. Samsung Never Argues That the Jury's Actual Award—75% of Netlist's Request—Is Unsupported 54

C. Kennedy Properly Apportioned 55

1. The '054 and '918 Patents 55

2. The '339 Patent 57

3. The '060 and '160 Patents 58

4. Netlist Was Not Required To Show "Available and Commercially Acceptable" Non-Infringing Alternatives 59

D. Samsung's Damages Arguments Do Not Warrant JMOL Regardless 60

V. Samsung Is Not Entitled to a New Trial on Damages 61

A. The District Court Properly Admitted Kennedy's License Analysis 61

1. Kennedy's Use of the Rambus License Was Proper 61

2. Kennedy Appropriately Considered Both the JDLA and SK hynix Licenses 66

B. No Damages Retrial Is Warranted for the '918 and '054 Patents 68

1. Kennedy Was Entitled To Rely on Dr. Groehn's Analysis 68

2. Dr. Groehn's Analysis Was Relevant to DDR5 Products 71

3. The District Court Did Not Err in Declining To Exclude Dr. Groehn's Analysis 72

CONCLUSION 73

TABLE OF AUTHORITIES

Page(s)

CASES

Acceleration Bay LLC v. 2K Sports, Inc.,
15 F.4th 1069 (Fed. Cir. 2021) 41, 42, 69

ActiveVideo Networks Inc. v. Verizon Commc'ns Inc.,
694 F.3d 1312 (Fed. Cir. 2012) 66, 71

Agrizap, Inc. v. Woodstream Corp.,
520 F.3d 1337 (Fed. Cir. 2008) 30

Akamai Techs., Inc. v. Limelight Networks, Inc.,
805 F.3d 1368 (Fed. Cir. 2015) 37

Apple Inc. v. Motorola, Inc.,
757 F.3d 1286 (Fed. Cir. 2014) 51, 69

Aqua Shield v. Inter Pool Cover Team,
774 F.3d 766 (Fed. Cir. 2014) 50, 51, 59

Arctic Cat Inc. v. Bombardier Recreational Prods. Inc.,
876 F.3d 1350 (Fed. Cir. 2017) 69

Aro Mfg. Co. v. Convertible Top Replacement Co.,
377 U.S. 476 (1964) 49

AstraZeneca AB v. Apotex Corp.,
782 F.3d 1324 (Fed. Cir. 2015) 46, 49, 56

B&B Hardware, Inc. v. Hargis Indus., Inc.,
575 U.S. 138 (2015) 31

Bazemore v. Friday,
478 U.S. 385 (1986) 72

Bio-Rad Labs., Inc. v. 10X Genomics Inc.,
967 F.3d 1353 (Fed. Cir. 2020) 61, 65

ClearValue Inc. v. Pearl River Polymers Inc.,
668 F.3d 1340 (Fed. Cir. 2012) 24

Comcast IP Holdings I LLC v. Sprint Commc'ns Co., L.P.,
850 F.3d 1302 (Fed. Cir. 2017) ..... *passim*

Daubert v. Merrell Dow Pharms., Inc.,
509 U.S. 579 (1993) ..... *passim*

Dura Auto. Sys. of Ind., Inc. v. CTS Corp.,
285 F.3d 609 (7th Cir. 2002) 70

ePlus, Inc. v. Lawson Software, Inc.,
700 F.3d 509 (Fed. Cir. 2012) 35, 39, 43

Ericsson Inc. v. D-Link Sys. Inc.,
773 F.3d 1201 (Fed. Cir. 2014) 24, 46, 50

Factory Mut. Ins. Co. v. Alon USA L.P.,
705 F.3d 518 (5th Cir. 2013) 70

Ferrara & DiMercurio v. St. Paul Mercury Ins. Co.,
240 F.3d 1 (1st Cir. 2001) 70, 72

Finjan, Inc. v. Blue Coat Sys., Inc.,
879 F.3d 1299 (Fed. Cir. 2018) 37

Fruge v. Penrod Drilling Co.,
918 F.2d 1163 (5th Cir. 1990) 27

Grain Processing Corp. v. Am. Maize-Prods. Co.,
185 F.3d 1341 (Fed. Cir. 1999) 59

Griffin v. United States,
502 U.S. 46 (1991) 41

Heat & Control, Inc. v. Hester Indus., Inc.,
785 F.2d 1017 (Fed. Cir. 1986) 63

Helmsderfer v. Bobrick Washroom Equip., Inc.,
527 F.3d 1379 (Fed. Cir. 2008) 44

i4i Ltd. P'ship v. Microsoft Corp.,
598 F.3d 831 (Fed. Cir. 2010) 42, 72

Johnson Worldwide Assocs., Inc. v. Zebco Corp.,
175 F.3d 985 (Fed. Cir. 1999) 44

In re Killian,
45 F.4th 1373 (Fed. Cir. 2022) 45

LaserDynamics, Inc. v. Quanta Comput., Inc.,
694 F.3d 51 (Fed. Cir. 2012) 65, 67

Lindemann Maschinenfabrik GmbH v. Am. Hoist & Derrick Co.,
895 F.2d 1403 (Fed. Cir. 1990) 52

LSI Corp. v. Regents of Univ. of Minn.,
43 F.4th 1349 (Fed. Cir. 2022) 41

Lucent Techs., Inc. v. Gateway, Inc.,
580 F.3d 1301 (Fed. Cir. 2009) 60

Mike's Train House, Inc. v. Lionel LLC,
472 F.3d 398 (6th Cir. 2006) 70, 71

Mirror Worlds Techs., LLC v. Meta Platforms, Inc.,
122 F.4th 860 (Fed. Cir. 2024) 40

MLC Intell. Prop., LLC v. Micron Tech., Inc.,
10 F.4th 1358 (Fed. Cir. 2021) 64

Monsanto Co. v. Ralph,
382 F.3d 1374 (Fed. Cir. 2004) 45

Powell v. Home Depot U.S.A., Inc.,
663 F.3d 1221 (Fed. Cir. 2011) 50

Presidio Components, Inc. v. Am. Tech. Ceramics Corp.,
875 F.3d 1369 (Fed. Cir. 2017) 59

Prism Techs. LLC v. Sprint Spectrum L.P.,
849 F.3d 1360 (Fed. Cir. 2017) 60

Promega Corp. v. Life Techs. Corp.,
875 F.3d 651 (Fed. Cir. 2017) 60

ResQNet.com, Inc. v. Lansa, Inc.,
594 F.3d 860 (Fed. Cir. 2010) 50

Rite-Hite Corp. v. Kelley Co., Inc.,
56 F.3d 1538 (Fed. Cir. 1995) 49

Slimfold Mfg. Co. v. Kinkead Indus., Inc.,
932 F.2d 1453 (Fed. Cir. 1991) 50

SmithKline Beecham Corp. v. Apotex Corp.,
439 F.3d 1312 (Fed. Cir. 2006) 42

Standard Oil Co. v. Am. Cyanamid Co.,
774 F.2d 448 (Fed. Cir. 1985) 31

Sulzer Textil A.G. v. Picanol N.V.,
358 F.3d 1356 (Fed. Cir. 2004) 32

Summit 6, LLC v. Samsung Elecs. Co.,
802 F.3d 1283 (Fed. Cir. 2015) 55, 56

Transclean Corp. v. Bridgewood Servs., Inc.,
290 F.3d 1364 (Fed. Cir. 2002) 50

Trell v. Marlee Elecs. Corp.,
912 F.2d 1443 (Fed. Cir. 1990) 64

Uniloc USA, Inc. v. Microsoft Corp.,
632 F.3d 1292 (Fed. Cir. 2011) 53, 54, 65

United States v. Grey Bear,
883 F.2d 1382 (8th Cir. 1989) 70, 71

Versata Software, Inc. v. SAP Am., Inc.,
717 F.3d 1255 (Fed. Cir. 2013) ..... *passim*

VirnetX, Inc. v. Cisco Sys., Inc.,
767 F.3d 1308 (Fed. Cir. 2014) 53

VLSI Tech. LLC v. Intel Corp.,
87 F.4th 1332 (Fed. Cir. 2023) 51, 60

WesternGeco L.L.C. v. ION Geophysical Corp.,
913 F.3d 1067 (Fed. Cir. 2019) 34

Whitserve, LLC v. Comput. Packages, Inc.,
694 F.3d 10 (Fed. Cir. 2012) 60

Wi-Lan, Inc. v. Apple, Inc.,
811 F.3d 455 (Fed. Cir. 2016) 34

STATUTES AND RULES

35 U.S.C. § 284 54

Fed. R. Civ. P. 703 70

STATEMENT OF RELATED CASES

No appeal in or from this proceeding was previously before this or any other appellate court. The following cases may directly affect or be directly affected by this Court's decision in the pending case: *Netlist, Inc. v. Samsung Electronics Co., Ltd.*, No. 24-1707 (Fed. Cir.) (appeal from IPR2022-00639 and IPR2023-00204 (P.T.A.B.)); *Netlist, Inc. v. Samsung Electronics Co., Ltd.*, No. 24-1859 (Fed. Cir.) (appeal from IPR2022-00996 and IPR2023-00406 (P.T.A.B.)); *Netlist, Inc. v. Samsung Electronics Co., Ltd.*, No. 24-1863 (Fed. Cir.) (appeal from IPR2022-00999 and IPR2023-00405 (P.T.A.B.)); *Netlist, Inc. v. Samsung Electronics Co., Ltd.*, No. 24-2240 (Fed. Cir.) (appeal from IPR2022-01427 (P.T.A.B.), joined with IPR2023-00883 (P.T.A.B.)); *Netlist, Inc. v. Samsung Electronics Co., Ltd.*, No. 24-2241 (Fed. Cir.) (appeal from IPR2022-01428 (P.T.A.B.), joined with IPR2023-00882 (P.T.A.B.)); *Netlist, Inc. v. Micron Technology, Inc.*, Case No. 2:22-cv-00203-JRG (E.D. Tex.); *Netlist, Inc. v. Micron Technology, Inc.*, Case No. 2:23-cv-00628-JRG (E.D. Tex.); *Samsung Electronics Co., Ltd. v. Netlist, Inc.*, Case No. 1:21-cv-01453-JLH (D. Del.); *Netlist Inc. v. Samsung Electronics Co., Ltd.*, Case No. 8:20-cv-00993-MCS-ADS (C.D. Cal.), and appeal Case Nos. 22-55209 and 22-55247 (9th Cir.).

In addition, on September 12, 2024, this Court ordered that this appeal and the following related appeals be treated as companion cases and assigned to the same

merits panel: Nos. 2024-1707, 2024-1859, 2024-1863, 2024-2240, and 2024-2241. ECF No. 13.

INTRODUCTION

Samsung's complaints about the proceedings below are as meritless as they are legion. Seeking to relitigate the factual issue of infringement on appeal, Samsung contends it is entitled to JMOL on ***five*** separate patents. It argues a reasonable jury would be required to find that its accused high-bandwidth memory products lack "array dies"; that its DDR5 products do not have a "second operable state" or contain "converter circuits"; and that its DDR4 products' data paths are not "byte-wise." But, as the district court recognized, the jury's factual findings on those issues are amply supported by the evidence—Netlist's and Samsung's expert testimony, Samsung's own internal documents, and the patents themselves. Insofar as Samsung asserts the jury was ***required*** to adopt its non-infringement positions, it improperly asks this Court to issue claim constructions Samsung never requested below.

Samsung's scattershot damages arguments are likewise improper. Samsung's complaints, while framed as sufficiency-of-the-evidence challenges, are challenges to Netlist's expert's methodology—issues that should have been raised under *Daubert*. Because they were not, they should be dismissed outright. Regardless, Netlist's evidence amply supports the verdict. Netlist's expert carefully assessed the incremental value of the patented inventions, and explained how market conditions and the parties' licensing histories would lead the parties to allocate the incremental revenue attributable to those patents. The jury was entitled to credit that testimony.

The *Daubert* challenges Samsung does raise are meritless. Samsung's fact-bound complaints about license-comparability and regression analysis are jury issues. This Court should affirm.

STATEMENT OF ISSUES

1. Whether substantial evidence supports the jury's finding that the accused products contain "array dies" and thus infringe the '060 and '160 patents.

2. Whether substantial evidence supports the jury's finding that the accused products contain a "converter circuit" or have a "second operable state" and thus infringe either the '918 or the '054 patent.

3. Whether substantial evidence supports the jury's finding that the accused products contain "byte-wise data paths" and thus infringe the '339 patent.

4. Whether substantial evidence supports the jury's damages award.

5. Whether the district court properly exercised its discretion in denying Samsung a new trial on damages.

STATEMENT OF THE CASE

I. TECHNOLOGICAL BACKGROUND

Netlist, Inc. is a pioneer in memory technology, with more than $1.1 billion in sales to customers including Dell, Apple, and IBM. Appx5192 (192:3-15). This appeal concerns Samsung's infringement of Netlist patents covering memory innovations that helped enable modern cloud computing.

A. Conventional Server Memory

Server memory is contained in memory modules, called "dual in-line memory module[s]" or "DIMMs." Appx5331-32 (328:11-20, 329:18-25).

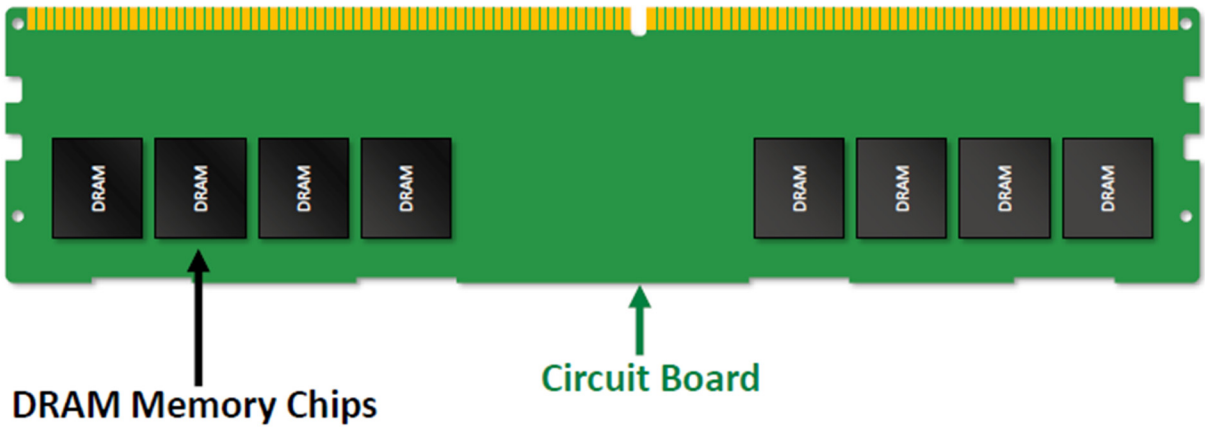

Appx22201 (cropped). A DIMM includes a circuit board with dynamic random-access memory ("DRAM") "chips" (black squares above). Appx5331 (328:11-20). Each DRAM chip includes millions of memory cells, each of which stores a binary 1 or 0. Appx5585 (582:4-6); Appx5892 (872:11-16). A single 1 or 0 is a "bit," eight bits are a "byte," and four bits are a "nibble." Appx5395 (392:1-13); Appx5446 (443:9-10).

DIMMs plug into "socket[s]" in the server's motherboard. Appx5331. The motherboard supplies DIMMs with power. Appx637 (22:1-10). Processors on the motherboard communicate with DIMMs, Appx637 (22:1-10); Appx5952-53 (932:25-933:2), instructing them to write to or read data from their DRAM chips via data lines, Appx5212 (212:18-25); Appx5386 (383:19-24). A "memory controller"

on the motherboard controls those communications. Appx5212(212:18-25); Appx588(5:44-64).

Nearly all DIMMs conform to industry standards published by the Joint Electron Device Engineering Council ("JEDEC"). Appx6425(7:19-24). Compliant products are labeled according to the generation of JEDEC's "Double Data Rate" standard to which they conform—*e.g.*, "DDR4" or "DDR5." Appx5151(151:3-4); Appx5189-90(189:24-190:2).

B. Capacity, Reliability, Load, and Noise Problems

Memory-module manufacturers have continually sought to increase capacity and speed. But increasing capacity usually came at the expense of speed, signal quality, and reliability. Appx5386-88; Appx593-94(16:67-17:6).

To increase capacity, manufacturers could "add[] more memory chips to [each] DIMM" or add more DIMMs to each "memory channel." Appx5386-87(383:18-384:20). But that created problems. Each additional device increased the electrical "load" along the data lines between the DIMMs and the memory controller, which increased "noise" and "crosstalk," and degraded signal quality. Appx5213(213:9-15); Appx593-94(16:67-17:6). That forced manufacturers to reduce "operational speed" to ensure reliable data transmission. Appx586(2:10-12, 2:18-22).

Increasing DIMMs' capacity also increased power consumption. Appx586 (2:10-12). High-capacity DIMMs use "more power" "to overcome the load." Appx706 (2:8-15). But that generates excessive heat and increases electricity expenses. Appx5331-32 (328:25-329:10); Appx586 (2:10-12).

JEDEC sought to improve DIMMs' "power efficiency" by decreasing their "voltage" levels. Appx22206. But DIMMs require "precise voltage[s] within a certain tolerance" to operate properly. Appx5332 (329:11-17). Lowering DIMMs' voltages reduces the error margin: Even small power fluctuations could result in data loss. Appx30565-74; *see* Appx5332 (329:11-17).

C. Netlist Advances Memory-Module Technology

This case concerns Netlist technologies that enable memory modules to have high capacity while still operating at high speeds—and with better power-efficiency and reliability than prior-art DIMMs. Those inventions are claimed in three U.S. patent families: (1) Nos. 8,787,060 and 9,318,160 ("'060 and '160 patents"), (2) Nos. 11,016,918 and 11,232,054 ("'918 and '054 patents"), and (3) No. 10,949,339 ("'339 patent").

1. *The '060 and '160 Patents Improve Memory Capacity Without Sacrificing Speed*

Netlist's inventors discovered they could decrease electrical load within DIMMs, allowing DIMMs to have both high capacity and fast operating speed. Appx5384-85 (381:18-382:2). Previously, DIMM manufacturers increased capacity

by stacking layers of memory dies—silicon wafers containing memory cells—within a DRAM chip. One method involved stacking "DRAM circuits":

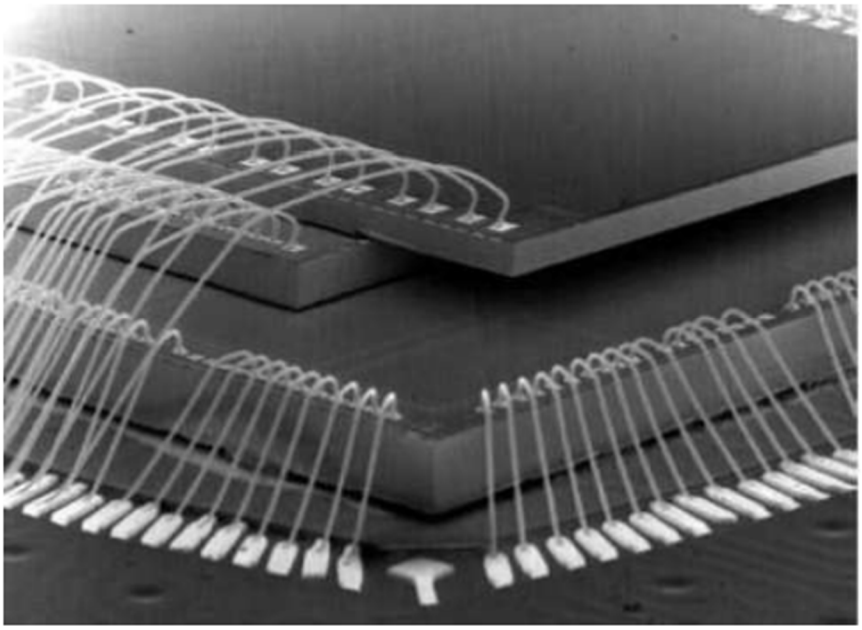

Appx22096. Stacked DRAM circuits were "connected using . . . external" wires. Appx5485 (482:1-8); *see also* Appx5497-98 (494:19-495:9). But DRAM circuits could only be stacked so high: They had limited "real estate" for external wires, and suffered increased "load[ ]" due to the connection "length." Appx5485-86 (482:16-483:1).

Some prior-art DIMMs used stacked "array dies" instead. Appx5487 (484:3-19). Rather than using external wires, array dies are electrically connected with "through-silicon vias, or TSVs." Appx5487 (484:3-19).

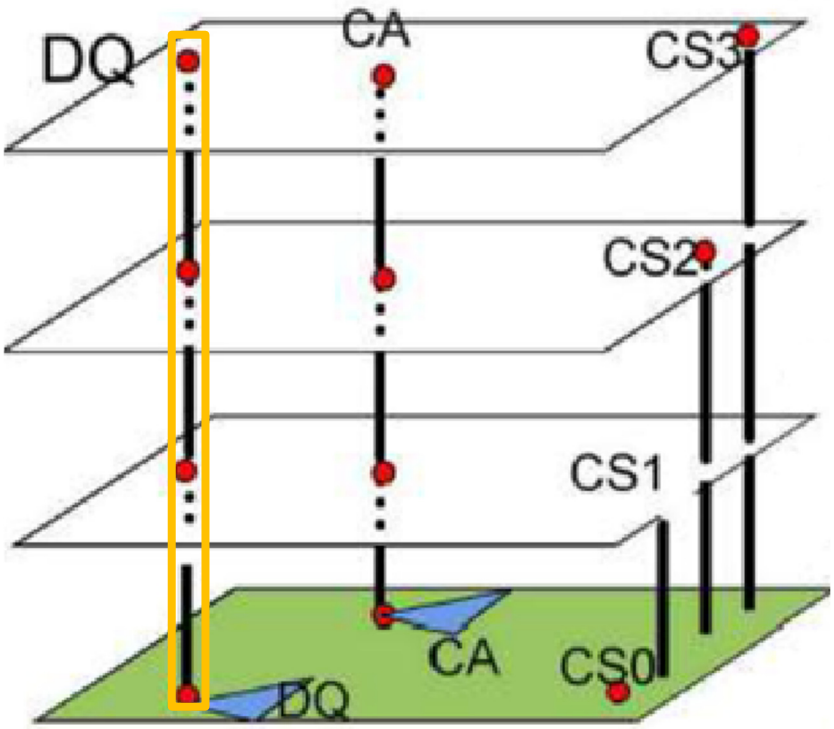

Appx22096 (annotated). TSVs (orange rectangle) run "internally through" "array dies" (white boxes) and connect to "data port[s]" on the dies (red circles within orange rectangle). Appx5487 (484:3-19).[1] Traditionally, every array die in a stack would share one TSV. Appx5488 (485:2-8). But each additional array die along a TSV increased "load," limiting DIMM speed. Appx5487-88 (484:25-485:15).

[1] The TSV designated "DQ" carries data; others, not relevant here, carry command and address ("CA") and chip-select ("CS") signals. Appx706 (1:30-2:7).

Netlist's invention instead divides stacked array dies into groups, using a separate TSV for each group, Appx717(23:47-50, 23:62-64):

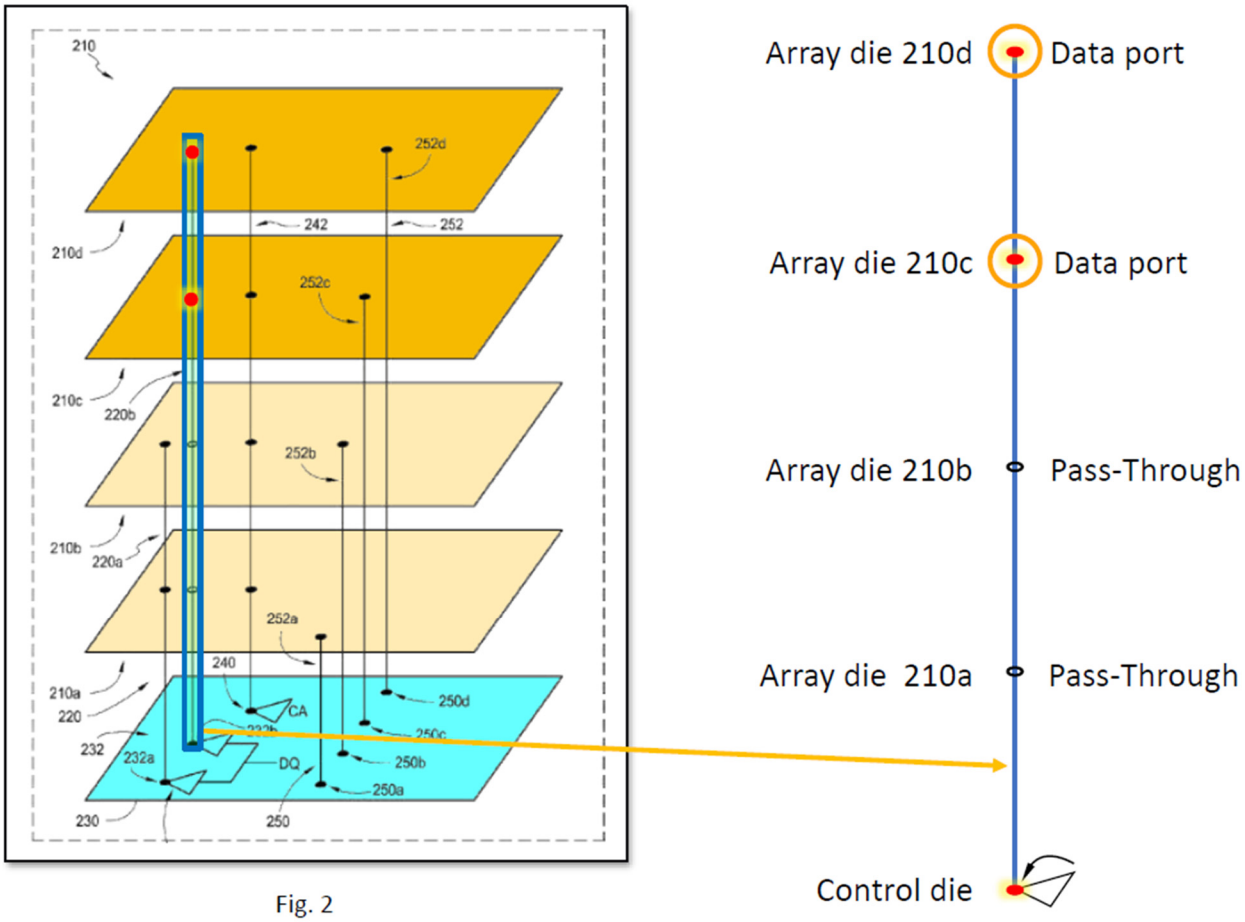

Appx22107. The TSVs "pass-through" (empty circles) a group of array dies (yellow) without connecting to them, while connecting (red dots) to another group (orange). Appx5519(516:16-23). That approach required using more TSVs, which are expensive and take up scarce space on the memory die. Appx709(8:8-18). But using more TSVs, each connected to fewer array dies, limits each group's load, allowing more dies to be stacked without sacrificing speed. Appx5487-88(484:25-485:15); Appx5533-34(530:13-531:14); Appx593-94(16:67-17:6).

At issue here is the claims' "array dies" limitation. Representative claim 1 of the '060 patent recites, in relevant part:

> A memory package, comprising: . . . a plurality of stacked ***array dies*** including a first group of array dies and a second group of at least one array die, each array die having data ports . . . .

Appx717(23:58-24:15) (emphasis added). Claim 5 of the '160 patent, which depends from claim 1 of that patent, is similar. Appx742(23:46-24:19).

2. *The '918 and '054 Patents Improve Reliability and Power-Efficiency*

The '918 and '054 patents claim inventions that dramatically improve memory-module reliability. Appx600; Appx648. Unlike prior-art DIMMs, which relied on the motherboard to provide regulated voltages, Netlist's invention utilized a power module on the DIMM itself. Appx620; Appx5195-96(195:3-196:11). The power module receives a single voltage from the motherboard, and uses "converter circuit[s]" to supply specific, regulated voltages to DIMM components. Appx645 (38:18-52). That sacrificed DIMM space, but enabled "a 30 percent improvement in power efficiency." Appx5332-33(329:18-330:10); *see* Appx12653; Appx22202-03.

Moving voltage regulation on-module also enabled Netlist to incorporate a "voltage monitor" that detects power surges or losses. Appx639(25:8-32). When the voltage monitor detects an anomaly, it switches the system from a "first state" to a "second state." Appx636(20:60-65); Appx638(24:27-30); Appx638-39(24:60-

25:7). That can include, for example, "stor[ing] configuration information," or "switch[ing]" "power suppl[ies]." Appx638(23:24-27); Appx639(26:36-65).

Claim 1 of the '918 patent recites, in relevant part:

> A memory module comprising: . . . a ***converter circuit*** configured to provide a fourth regulated voltage having a fourth voltage amplitude . . . .

Appx645(38:18-52) (emphasis added).

Claim 16 of the '054 patent recites, in relevant part:

> A memory module comprising: . . . a ***voltage monitor circuit*** . . . wherein, ***in response to the voltage monitor detecting an amplitude change in the input voltage, the memory module transitions from a first operable state to a second operable state***.

Appx694(39:62-40:20) (emphasis added).

3. *The '339 Patent Increases Capacity Without Sacrificing Speed*

Netlist also pioneered DIMMs that reduce load in the data lines running between the DIMMs and the memory controller. Appx17546. Claimed in the '339 patent, that technology improves speed and reliability by reducing load, noise, and "crosstalk" on shared data lines. Appx589(8:4-6); Appx593-94(16:45-17:13).

In prior-art DIMMs, each DRAM chip would communicate directly with the memory controller, resulting in each chip adding to the load of each data line. Appx587-88(4:61-5:3); Appx5388(385:20-24). The '339 patent's invention reduces load by adding distributed buffers (blue below) on each memory module

(pink) ***between*** the DRAM chips (orange) and the data lines (yellow) to the memory controller (green). Appx590 (10:55-66):

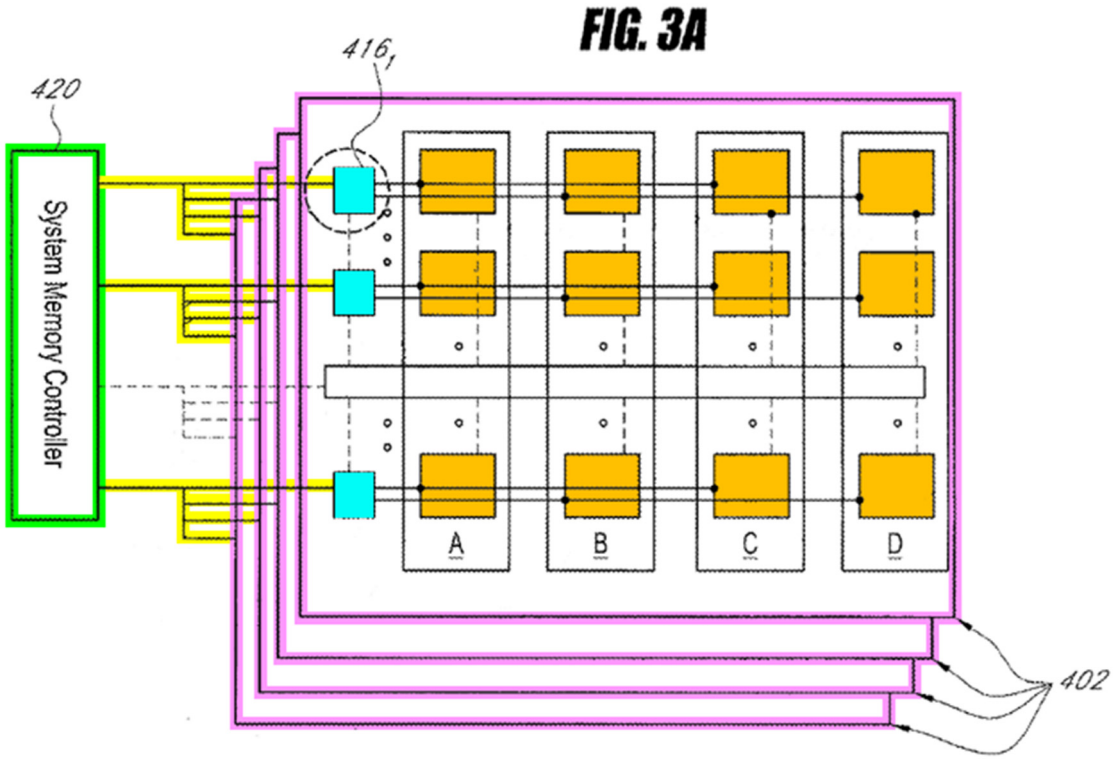

Appx31133.

The distributed buffers provide "load isolation": The memory controller "see[s]" only the load of the buffer itself, rather than the load of each DRAM chip. Appx5213 (213:16-24). Adding those buffers required myriad innovations to ensure data would be driven through the buffers at the correct times, accounting for delays of the circuits on the DIMM. Appx593 (15:61-16:25). Netlist's distributed buffers

could support "double[ ]" the DIMMs per memory channel without sacrificing speed. Appx5403 (400:18-23).

At issue is the claims' requirement that data be "driven" on "byte-wise data path[s]" through the distributed buffers. Claim 1 recites, in relevant part:

> A N-bit-wide memory module . . . comprising . . . a plurality of byte-wise buffers . . . wherein each respective byte-wise buffer . . . has . . . ***a byte-wise data path*** . . . [that] is enabled . . . to actively drive a respective byte-wise section of the N-bit wide write data . . . .

Appx595 (19:9-61).

II. PROCEDURAL HISTORY

Netlist accused Samsung's high-bandwidth DIMMs of infringing the '060 and '160 patents; Samsung's DDR5 DIMMs of infringing the '918 and '054 patents; and Samsung's DDR4 load-reduced DIMMs of infringing the '339 patent. Appx2321-23. A jury found that Samsung infringed at least one claim of each patent family and awarded $303 million in damages: $123 million for the '060 and '160 patents; $147 million for the '918 and '054 patents; and $33 million for the '339 patent. Appx2321-26. The district court denied Samsung's motion for JMOL or a new trial. Appx1.

A. Samsung's Infringement of the '060 and '160 Patents

The asserted claims of the '060 and '160 patents require "stacked array dies." *E.g.*, Appx717 (23:58-24:15). During prosecution, the examiner initially rejected the then-pending claims over a reference called Rajan137. Appx30006. Netlist over-

came the rejection by explaining that Rajan137 disclosed "DRAM circuits," not "array dies." Appx30035. The district court below thus construed "array die" to mean "array die that is different from a DRAM circuit." Appx1381. Samsung did not object, nor argue that further construction was needed. Netlist initially objected to the construction, urging the court to clarify that Netlist's disclaimer was "limited to Rajan's 'DRAM circuits.'" Appx1386. It later withdrew the objection, opting to offer testimony that Samsung's accused devices contain the claimed "array dies," not "DRAM circuits." Appx1394.

At trial, Netlist's expert, Dr. Brogioli, explained that Samsung's accused products contain the recited "array dies"—not the excluded "DRAM circuits." "DRAM circuits," he testified, are "monolithic device[s]" wherein different layers are "connected using . . . external" wires. Appx5497-98(494:19-495:9); Appx5485 (482:7-8). By contrast, DRAM "array dies" use "internal[]" connections—"through-silicon vias, or TSVs." Appx5487(484:3-19). Brogioli presented unrebutted evidence that Samsung's products use internal TSVs, not the external wires characteristic of DRAM circuits. Appx5512(509:13-15); Appx5517(514:16-22); Appx5519(516:7-14); *see* Appx5655-58(649:7-652:20). Brogioli thus concluded that Samsung's products contain array dies, not DRAM circuits.

The jury found that Samsung infringed at least one claim of the '060 or '160 patents. Appx2321-26. On JMOL, the district court rejected Samsung's argument

that Brogioli's testimony was "inconsistent with the Court's construction," noting it had rejected the same argument "at the *Daubert* stage." Appx14.

B. Samsung's Infringement of the '918 and '054 Patents

The jury found that Samsung infringed at least one asserted claim of the '918 and '054 patents. Appx2321-26.

Second Operable State. The '054 patent's claims require a "memory module" "configured to" "transition[] from a first operable state to a second operable state." Appx694 (39:63-40:20). The parties stipulated that "second operable state" means a "state in which the memory module is operated after transition." Appx1241.

Netlist's expert, Dr. Mangione-Smith, explained that the accused products transition to a "second operable state" when they detect a power surge. The DIMMs power off the "DRAMs," but direct "power" to four other components "on the memory module": "the RCD, the SPD, the temperature sensor, and the PMIC." Appx5381-83 (378:25-380:1). Mangione-Smith explained that the PMIC gives Samsung's memory modules a "30 percent improvement in power efficiency," and that the DRAMs could not "turn back on" without the RCD. Appx5333 (330:3-14); Appx5382-83 (379:20-380:1). Mangione-Smith testified that each of those components is "active and operating" in the second state, Appx5382 (379:20-23), and that the second state is thus a "state in which the memory module is operated after tran-

sition," Appx1241. On JMOL, the court found the jury could credit that testimony. Appx22.

Converter Circuit. The '918 patent's claims require a "converter circuit." Mangione-Smith testified that the accused products' "low drop-out" circuit, or "LDO," constitutes a "converter circuit." Appx5338 (335:4-18). The LDO, he explained, is a converter circuit because it "receive[s]" an "input voltage" and "reduces [it] to a lower output voltage." Appx5338-39 (335:4-336:17). A Samsung engineer agreed that the LDO "converts" input voltages. Appx5339 (336:11-20). A Samsung supplier likewise testified that the "LDO is a voltage converter." Appx5339-40 (336:25-337:8).

The court found that substantial evidence supported the jury's finding that the LDO is a "'converter circuit.'" Appx19. The claim, the court explained, "requires electrical components for voltage conversion" and thus was "broad, [but] not without meaning." Appx18-19. The court also rejected Samsung's argument that a "'converter circuit'" must include a specific kind of "'switch.'" Appx17. That was a "late," and erroneous, "claim construction" argument. Appx17; Appx20.

C. Samsung's Infringement of the '339 Patent

For the '339 patent, Samsung focuses on a limitation reciting a "byte-wise data path" that is "enabled" to "drive" data across the buffer. Appx595 (19:9-61). The district court construed the claims to require "multiple" byte-wise data paths,

wherein "'only one'" path is "'enabled'" "'while the other possible paths are disabled.'" Appx9; Appx1359. No party sought construction of the term "byte-wise." *See* Appx1183-89; Appx1356-63.

Netlist presented evidence that Samsung's accused DIMMs infringe. Appx5390(387:15-16). Mangione-Smith explained that there are two write data paths within those devices' buffers, each carrying four bits—half a byte, or a "nibble"—of data. Appx5394-96(391:16-393:14). The "upper half byte" travels on "one circuit" while the "lower half byte" travels on another. Appx5395(392:2-10). Mangione-Smith illustrated the two data paths using Samsung's own schematic, highlighting the "lower" path (carrying bits 0-3) in green, and the "upper" path (carrying bits 4-7) in red. Appx5395(392:2-20).

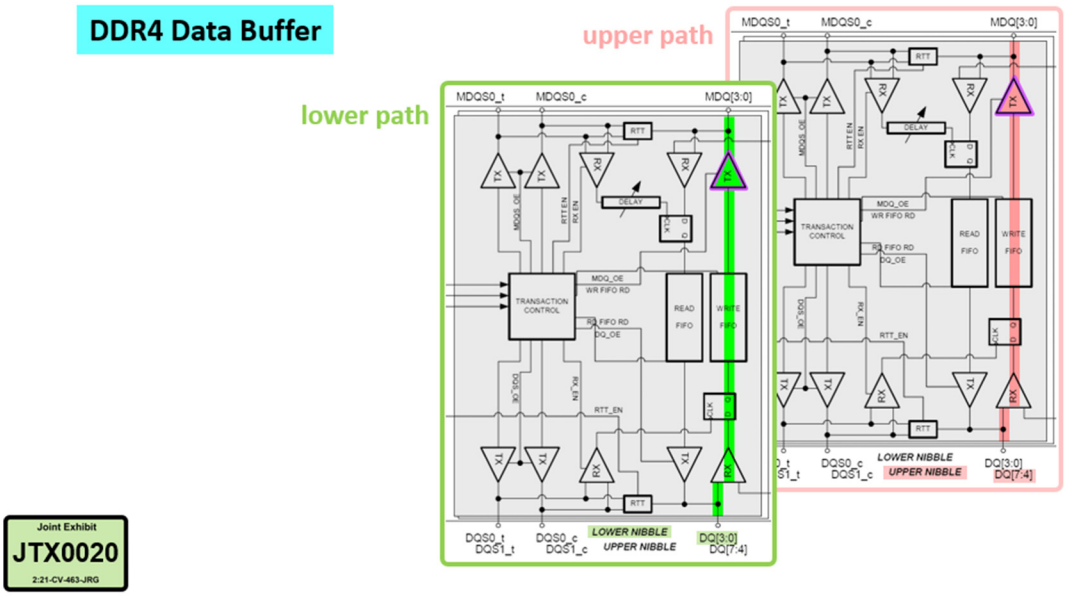

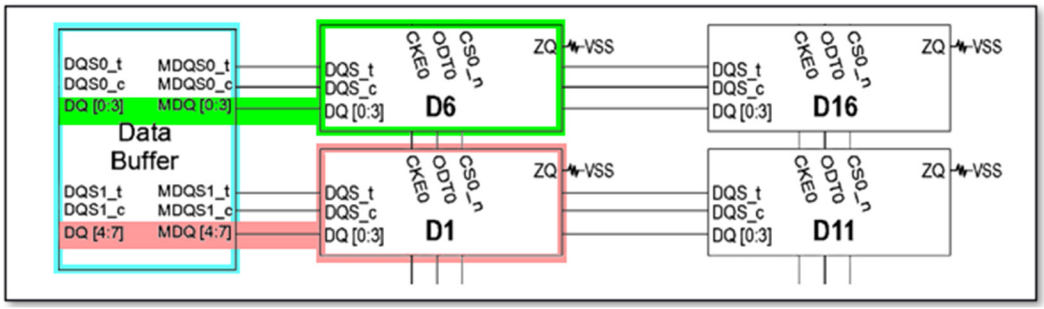

Appx31157-58. Because one path is enabled while the other is disabled, Mangione-Smith testified, those paths satisfy the court's construction. Appx5398-99 (395:24-396:3).

The evidence also showed another way that Samsung's products satisfied the byte-wise data path limitation. Samsung's expert, Dr. McAlexander, disagreed that the upper and lower write paths were ***separate*** data paths; in McAlexander's view, those two four-bit paths should be viewed as a "single" eight-bit path. Appx5941-42 (921:21-922:16); Appx5944 (924:8-11). On cross-examination, McAlexander admitted that even if that was true, there was another eight-bit path on the buffer—a ***read*** path, which carries data through the buffer in "the opposite direction." Appx6018-21(998:1-1001:21); *see also* Appx8751.

The jury found that Samsung infringed at least one claim of the '339 patent, Appx2323, and the court denied Samsung's motion for JMOL, Appx8-10. The court rejected Samsung's contention that Netlist had not shown ***multiple*** byte-wise data paths. Appx8-9. Samsung insisted that the two, four-bit write paths Mangione-Smith identified should be considered a "***single*** 8-bit data path." Appx18023 (em-

phasis added). Alternatively, Samsung contended that a "4-bit data path" is not a "byte-wise data path" because, in its view, a "byte-wise data path" must be eight bits, or one byte, wide. Appx18023. Samsung, however, had never sought construction of the term "byte-wise data path." Mangione-Smith had testified that, because "byte-wise" means "measured in terms of bytes," it encompasses four-bit paths—testimony supported by the '339 patent's disclosures. Appx18100-01; Appx8-9; Appx5456-57 (453:2-454:5). And even if the two four-bit write paths were considered one eight-bit write path, Netlist pointed out, there were still multiple paths: Samsung's expert, McAlexander, had testified that there was also an eight-bit ***read*** data path through the buffer, for a total of two eight-bit data paths. Appx18098-101. The court agreed with Netlist, holding that each ground independently supports the verdict. Appx8-10.

D. Damages

Netlist's expert, Mr. Kennedy, calculated a reasonable royalty based on a hypothetical-negotiation model. That model looked to, among other things, the incremental value Netlist's inventions added to each accused product.

1. Kennedy apportioned the incremental value Netlist's patented technology added to the accused devices, compared to "non-infringing alternative[s]." Appx5709 (703:23-25). For the '918 and '054 patents, Kennedy calculated the price difference between a Samsung DDR5 module with Netlist's technology and a slower

module without it. Appx5704-05 (698:17-699:16). A regression prepared by Kennedy's colleague, Dr. Groehn, determined "the relationship between speed and price" based on Samsung's DDR4 sales data. Appx1438-55; Appx18516 (¶11); Appx18523 (¶28). For the '339 patent, Kennedy compared the price of Samsung's two-DIMM-per-channel module (with Netlist's technology) to the price of a one-DIMM-per-channel module (without Netlist's technology). Appx5706 (700:6-25). And for the '060 and '160 patents, Kennedy compared the price of Samsung's eight-die-high stacked memory product (with Netlist's technology) to its four-die-high product (without Netlist's technology). Appx5707-09 (701:15-703:3).

Kennedy identified several factors placing "upward" pressure on the royalty. Appx5699 (693:2-4); Appx5720 (714:20-23). Samsung "really need[ed]" Netlist's technology to remain competitive in the memory-module market. Appx5694 (688:5-8); Appx5712-13 (706:4-707:10). And Netlist would demand a premium royalty: It had never licensed its technology without receiving significant non-monetary consideration, like a "strategic relationship" or "supply" contract. Appx5698 (692:11-21). Samsung, moreover, had paid a substantial sum for a license from another party, Rambus, in a "very similar situation" involving technologically comparable "memory patents." Appx5693 (687:9-14); *see* Appx18362 (¶¶463-64). That license indicated that, in "the big picture framework," Samsung faced significant pressure to secure rights to critical memory technology. Appx5697-99 (691:1-693:4).

Kennedy concluded that, given the market factors he identified, Samsung would agree to a royalty that allocated Netlist all of the incremental value attributable to its patents. Appx5720-21 (714:24-715:18); Appx5765 (759:10-13). That would "still le[ave]" Samsung all revenues not attributable to Netlist's technology, including "a significant profit" on sales of the accused devices. Appx5711 (705:18-23).

The jury awarded Netlist $303 million, 75% of the damages it sought. Appx2326; Appx5721 (715:14-18).

2. The district court denied Samsung's motion for JMOL or a new trial on damages. Appx41. The court held—as it had at *Daubert*, Appx1481-83; Appx283 (218:5-6)—that Netlist's experts properly apportioned the royalty to the inventions' value. Appx50-52; Appx55. The court rejected Samsung's arguments that Kennedy had applied an improper "rule of thumb" as "attacks" on "Kennedy's methodologies" that were "either waived" or "improperly re-raised" after having been rejected at *Daubert*. Appx48; *see* Appx1487-88; Appx283 (218:5-6). And substantial evidence supported Kennedy's opinion that Samsung would allow Netlist to keep "100% of the value" of its technology. Appx46-48.

Samsung argued that Kennedy was required to rely on two prior Netlist licenses (one with SK hynix and a Joint Development and License Agreement with Samsung), and should have been barred from invoking the Rambus license. Appx52. The court had rejected those arguments at *Daubert*. Appx1489-90; Appx283 (218:5-

6). Post-trial, the court found Samsung's argument "a classic challenge to [an] expert's methodology" that cannot be re-raised at JMOL. Appx53. Besides, substantial evidence supported Kennedy's license-comparability analysis. Appx53.

Finally, the court rejected Samsung's argument that Kennedy could not rely on Groehn's analysis unless Groehn testified at trial. Appx58. The court found that argument waived. Appx57. Samsung "could have called Dr. Groehn adversely," but did not. Appx57. Nor did Samsung object "until evidence closed[,]" or request "a sur-rebuttal" to call Groehn. Appx57-58. Furthermore, Samsung's argument was "essentially [a] challenge [to] Mr. Kennedy's reliance on Dr. Groehn," an argument "raised and rejected" at *Daubert*. Appx58.

SUMMARY OF ARGUMENT

I. The '060 and '160 patents require "stacked array dies," which the court construed to exclude "DRAM circuits." Netlist's expert testified that "DRAM circuits" are "monolithic device[s]" wherein different layers are "connect[ed]" using "external" wires, whereas array dies use internal "through-silicon vias." Samsung's accused dies use internal TSVs—not external wires. Substantial evidence thus supports the jury's infringement verdict. Samsung offers a different definition of "DRAM circuit," but that is a forfeited (and mistaken) claim-construction argument.

II. A. Substantial evidence supports the jury's finding that Samsung's DIMMs have a "second operable state" in which "the memory module is operated

after transition," as the '054 patent requires. Four crucial on-module components are undisputedly "active and operating" in the second state. Samsung's argument that the memory modules are not "operable" in the second state because the DRAM chips are powered off is a forfeited claim-construction argument that is mistaken regardless.

B. Ample evidence supports the jury's finding that Samsung's DIMMs have a "converter circuit," as the '918 patent requires. Samsung's DIMMs have a "low drop-out" circuit that converts an input voltage into a reduced output voltage. Netlist's expert thus explained that the LDO is a "converter circuit." Samsung's argument that the jury had to accept its view of "converter circuit" is a forfeited and mistaken claim-construction argument.

III. Samsung seeks JMOL on infringement of the '339 patent. But two independent theories support the verdict below, and Samsung challenges only one on appeal. That precludes relief. And substantial evidence supports the verdict under the theory Samsung challenges. The jury could find, based on the trial evidence (including the patent itself), that Samsung's accused devices contain multiple byte-wise data paths. Samsung's argument that "byte-wise" means "eight bits wide" is a forfeited claim-construction argument the jury could reject.

IV. A. Substantial evidence supports the jury's damages award. Netlist's expert, Kennedy, conducted a textbook hypothetical-negotiation analysis. He carefully

calculated the incremental value Samsung realized from Netlist's patented technology, apportioning down to the value of the inventions themselves. And he thoroughly analyzed the parties' licensing history and market forces. Only then did he conclude that Samsung would agree that Netlist should keep the incremental value attributable to its patented technology. A reasonable jury could have—and did—award Netlist 75% of the damages it sought.

B-C. Samsung's challenges to Kennedy's methodology are improperly raised *Daubert* arguments and should be rejected for that reason alone. They fail regardless. Kennedy was not required to calculate Samsung's incremental profits; did not apply a "100% of revenue rule of thumb"; and properly apportioned to isolate the value of the patented technology.

D. Regardless, Samsung never argues that the jury's actual damages award—75% of what Netlist requested—is unsupported by substantial evidence. Affirmance must follow.

V. Nor is a damages retrial warranted.

A. Kennedy's comparable-license analysis was reasonable. Relying on Netlist's technical expert, he explained why the Rambus license was comparable, and why the Joint Development and License Agreement and SK hynix licenses were not. Samsung forfeited its challenge to the technical-comparability analysis by failing to raise it below; its complaints go to weight, not admissibility, regardless.

B. Kennedy's reliance on a regression analysis conducted by a colleague, Dr. Groehn, to determine the price-speed relationship for Samsung's DDR5 products was also proper. Samsung's complaint that Groehn should have been called at trial is waived. On the merits, the evidence supported Groehn's conclusion that the relationship between speed and price is similar for DDR4 and DDR5 products. And questions about Groehn's variable selection and collinearity go to weight, not admissibility.

STANDARD OF REVIEW

Although the Fifth Circuit reviews "denial of JMOL *de novo*," *ClearValue Inc. v. Pearl River Polymers Inc.*, 668 F.3d 1340, 1343 (Fed. Cir. 2012), "JMOL may only be granted when, 'viewing the evidence in the light most favorable to the verdict, the evidence points so . . . overwhelmingly in favor of one party that . . . reasonable jurors could not arrive at any contrary conclusion,'" *Versata Software Inc. v. SAP Am., Inc.*, 717 F.3d 1255, 1261 (Fed. Cir. 2013). Admission of expert testimony, and denial of a new-trial motion, are reviewed for abuse of discretion. *Ericsson Inc. v. D-Link Sys. Inc.*, 773 F.3d 1201, 1225 (Fed. Cir. 2014).

ARGUMENT

Samsung contends that the district court and jury reversibly erred on virtually every issue disputed below. It argues it is entitled to JMOL of non-infringement of each of the five asserted patents because—contrary to the verdict—a reasonable jury

could ***only*** accept Samsung's non-infringement positions. But substantial evidence amply supports the infringement verdicts. To the extent Samsung now says the jury was required to accept its non-infringement arguments as a matter of law, Samsung presses claim-construction arguments it never pressed below; it cannot revive them as substantial-evidence challenges post-verdict.

Samsung also seeks JMOL on damages, but again, the verdict is amply supported. Samsung's sufficiency-of-the-evidence challenges are, in substance, *Daubert* arguments improperly presented as JMOL arguments. The *Daubert* challenges Samsung does raise as such are largely forfeited, and go at most to weight. This Court should affirm.

I. SUBSTANTIAL EVIDENCE SUPPORTS THE INFRINGEMENT VERDICT ON THE '060 AND '160 PATENTS

The '060 and '160 patent claims require "array dies." *E.g.*, Appx717(23:62-64). Based on Netlist's prosecution disclaimer, the district court construed "array dies" to exclude "DRAM circuit[s]." Appx1381. Substantial evidence supports the jury's verdict that Samsung's memory dies are "array dies," not "DRAM circuits."

A. Substantial Evidence Supports the Jury's Finding That the Accused Products Contain "Array Dies"

1. *The Jury's Finding That the Accused Devices Contain "Array Dies," Not "DRAM Circuits," Is Amply Supported*

A reasonable jury could find that Samsung's accused products contain "array dies," not DRAM circuits. Netlist's expert, Dr. Brogioli, explained the differences

between "array dies" and "DRAM circuits." He testified that array dies and DRAM circuits are each capable of forming stacked memory, but that they have distinct structures. "DRAM circuits" are "monolithic device[s]" wherein different layers in the stacked memory are "connect[ed]" using "***external***" wires (below, left). Appx5497-98 (494:19-495:20) (emphasis added); *see* Appx5554 (551:3-22). By contrast, "array dies" use "***internal*** [ ]" connections—"through-silicon vias, or TSVs" (below, right). Appx5487 (484:3-19) (emphasis added); *see* Appx5509-13. Brogioli explained that array dies also have "internal" "data ports" (below right, red) to which the TSVs connect. Appx5509 (506:10-13).

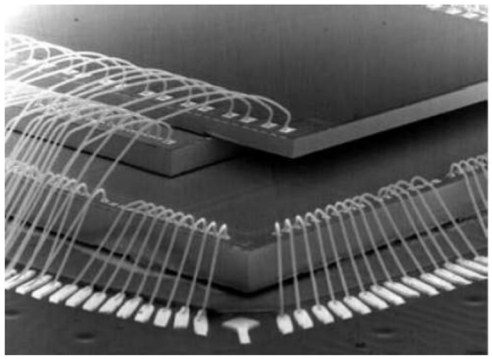

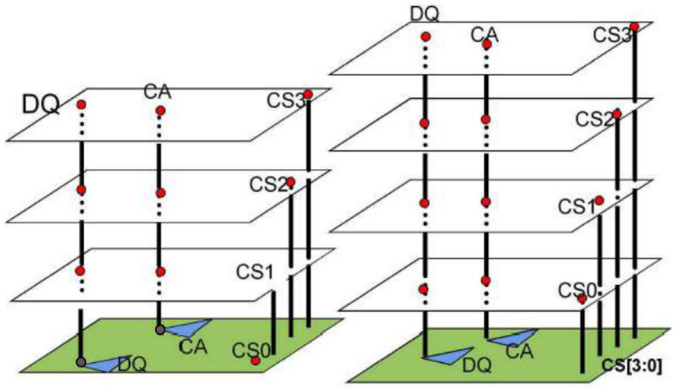

Appx22096. Brogioli also explained that Rajan137, the reference Netlist disclaimed during prosecution, disclosed externally-wired "DRAM circuits," not array dies with internal TSVs. Appx5517-19 (514:16-516:12).

Samsung's expert, McAlexander, agreed that devices connected by external wire bonds are "DRAM circuits," and that such devices are an "alternative" to the

TSV-connected dies used in the ’060 patent.[2] Appx6041-42 (1021:16-1022:3) (discussing Appx12984). And Samsung’s own documents contrasted dies connected by external wires (as in DRAM circuits) with dies connected by internal TSVs (as in array dies). Appx5510-12 (507:23-509:6).

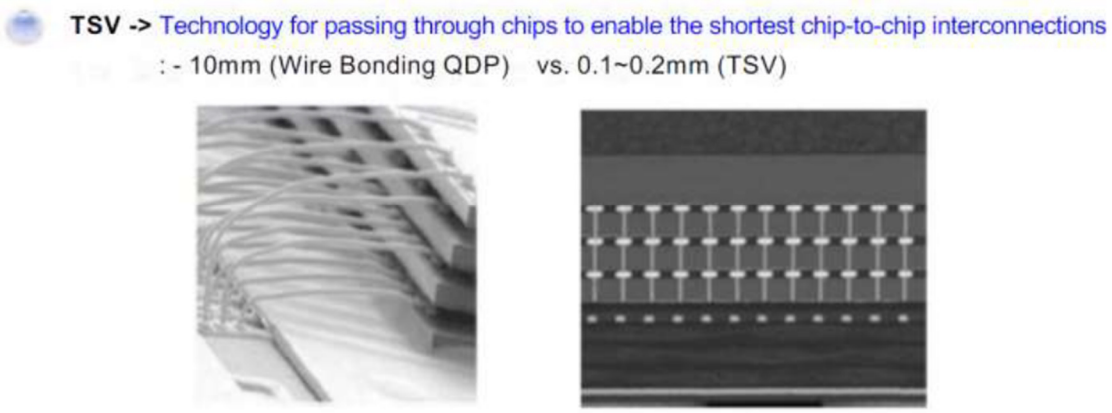

Appx12983 (cropped); Appx22111.

Brogioli explained why the difference matters. DRAM circuits’ external wires caused “issues” with “loading” and speed, whereas array dies’ internal TSVs “reduce[ ] the load,” “lower power consumption,” and increase speed. Appx5485-86 (482:9-483:25); Appx5533 (530:13-17). Samsung’s documents confirmed that, comparing wire bonding (as in DRAM circuits) to “taking the stairs up the outside of a [low-rise] building,” and TSVs (as in array dies) to a “high-rise building with a high-speed elevator.” Appx5511-12 (508:21-509:4).

[2] While Samsung objected to that testimony as beyond the scope of McAlexander’s testimony, Appx6041 (1021:9-14), it did not request an instruction limiting use of that testimony, and does not argue the issue on appeal. *See Fruge v. Penrod Drilling Co.*, 918 F.2d 1163, 1168 (5th Cir. 1990).

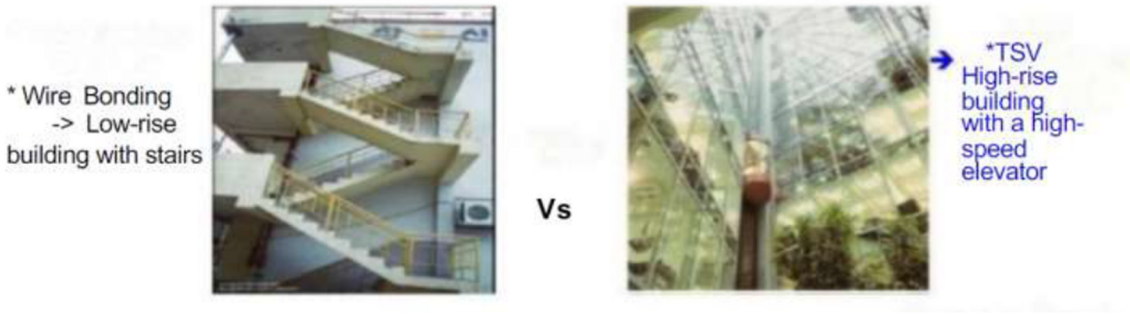

Appx12983 (cropped); Appx22111.

Brogioli testified that Samsung's products contain array dies, not DRAM circuits. Appx5494-98 (491:12-495:9); Appx5512 (509:13-15); Appx5517 (514:20-22); Appx5519 (516:7-12). Like the claimed array dies, Samsung's products use ***internal*** "TSV[s]"—not the external wires characteristic of DRAM circuits. Appx5512 (509:13-15); Appx5517 (514:20-22); Appx5519 (516:7-12); *see* Appx5655-5658. And like the claimed array dies, Samsung's products use ***internal*** data ports—not connections along the dies' ***external*** edges. Appx5496-97 (493:14-494:9); Appx5519-20 (516:24-517:4).

Samsung's documents and witnesses confirmed that Samsung's devices use "TSVs" that "internally" connect Samsung's memory dies via internal "data ports." Appx6098 (1078:7-17); *see* Appx5512 (509:13-15); Appx5646 (640:7-9); Appx6041-42 (1021:23-1022:3); Appx6045 (1025:15-19); Appx8577; Appx8676; Appx1284; Appx17224; Appx22104-21. Samsung's corporate representative agreed that "DRAM circuit[s]" using "wire bonding to connect the dies" are different from the "TSV connections" in Samsung's accused products. Appx5657-58

(651:21-652:8); *see also* Appx5662-63 (656:24-657:4) (prior-art "DRAM circuits" different from accused "DRAM dies"). Samsung's expert admitted he could identify no Samsung document that referred to Samsung's accused products as "DRAM circuits." Appx6108 (1088:10-17).

Samsung contends that Brogioli "refused to offer an opinion as to the plain meaning of 'DRAM circuits.'" Samsung.Br.26. That argument is surprising. Below, Samsung's trial counsel ***complained*** that Brogioli "offer[ed] ***a definition*** of . . . the plain meaning of DRAM circuit." Appx5498-508 (495:3-505:15) (emphasis added). In any event, Brogioli testified that "DRAM circuits" are distinct, "monolithic" devices with "external" data connections—sufficient "definition" if one were required. Appx5497-98 (494:4-495:20); *see* pp. 25-26, *supra*. And Brogioli's testimony aside, other evidence, including Samsung documents discussed above, supports the jury's finding that Samsung's devices are not "DRAM circuits." *See* pp. 26-28, *supra*.

2. *Samsung's Efforts To Re-Litigate the Meaning of "DRAM Circuit" on Appeal Fail*

Samsung offers various arguments for its preferred definition of "DRAM circuit." Samsung.Br.22-24, 26-27. But Samsung did not seek construction of the term below. Accordingly, it can prevail on its evidentiary-sufficiency challenge only by showing it "'has the ***only reasonable view*** of the claim.'" *Comcast IP Holdings I LLC v. Sprint Commc'ns Co., L.P.*, 850 F.3d 1302, 1311-12 (Fed. Cir. 2017)

(emphasis added). Samsung comes nowhere close. The jury was not required to credit Samsung's view over Brogioli's testimony and Samsung's own documents, and this Court "'may not [re-]weigh the evidence'" on appeal. *Agrizap, Inc. v. Woodstream Corp.*, 520 F.3d 1337, 1342 (Fed. Cir. 2008).

Samsung is wrong regardless. Samsung urges that Brogioli's academic writings "discuss[ ] DRAM without limiting [the] concept to a particular type of wiring." Samsung.Br.26. Brogioli explained that he had not mentioned wiring-type because it was not "relevant" in the "context" of those papers. Appx5563-64 (560:11-561:1).

According to Samsung, Brogioli "agreed" that a Netlist inventor had "testified that DRAM circuits and DRAM dies are both widely referred to as 'DRAM.'" Samsung.Br.26. But the fact that "DRAM" may be used to describe both DRAM array dies and DRAM circuits does not mean that "DRAM ***array dies***" and "DRAM ***circuits***" are the same thing. People use the word "vehicle" to describe both semi-trucks and mopeds, but no one thinks they are the same.

Samsung asserts that "Brogioli admitted that each DRAM die has millions of DRAM cells on it," and argues that "DRAM cells" have "circuit components." Samsung.Br.26-27. But Brogioli explained that skilled artisans do not refer to DRAM cells—tiny structures that are combined to form DRAM dies—as "DRAM circuits." Appx5554-55 (551:3-552:25); Appx5571-73. He testified that in this context, "DRAM circuit" refers to DRAM dies that are externally connected in a

monolithic structure. Appx5497-98 (494:19-495:20). Insofar as Samsung suggests any device containing both "DRAM cells" and "circuit components" is a DRAM circuit, that merely disagrees with Brogioli (and amounts to a waived claim-construction argument, *Comcast*, 850 F.3d at 1311-12).

Samsung does no better arguing that the patents' specifications "state[] that the inventions encompass all types of memory" and mention various "types of array die interconnections." Samsung.Br.22-23. Even if the claims originally could have encompassed all types of memory and connections, Netlist's disclaimer of DRAM circuits "limits the interpretation of claims" to "exclude any interpretation that may have been disclaimed." *Standard Oil Co. v. Am. Cyanamid Co.*, 774 F.2d 448, 452 (Fed. Cir. 1985). Skilled artisans would understand that such vague and broad descriptions are irrelevant in view of the later disclaimer here.

Finally, Samsung says that Netlist conceded, in an IPR of the '060 and '160 patents, that "DRAM circuits" can be "connected using [TSVs]." Samsung.Br.23. Not so. Netlist argued that Samsung had not shown that a particular reference asserted in the IPR disclosed the claimed array dies, as opposed to DRAM circuits; Netlist disclaimed any burden to offer its own definition of "DRAM circuit." Appx22054-55. Regardless, the PTAB never adjudicated the issue, so there could be no estoppel. *B&B Hardware, Inc. v. Hargis Indus., Inc.*, 575 U.S. 138, 148 (2015).

B. Samsung's Prosecution-History Arguments Fail

Samsung contends Netlist's definition of "DRAM circuits" contradicted the district court's claim construction and the prosecution history. Samsung.Br.20. But that amounts to a challenge to admissibility of evidence, not a basis for JMOL. *Sulzer Textil A.G. v. Picanol N.V.*, 358 F.3d 1356, 1367 (Fed. Cir. 2004). Regardless, as the district court held, Netlist's evidence was "not inconsistent" with the claim construction. Appx14.

1. Samsung errs in asserting that the evidence contradicted the court's claim construction. During prosecution, Netlist distinguished Rajan137 as disclosing "'DRAM circuits . . . which are different from array dies.'" Appx1380-81. Based on that disclaimer, the district court construed "array die" as an "array die that is different from a DRAM circuit." Appx1381. Netlist initially urged the court to clarify that Netlist's disclaimer was "limited to Rajan's 'DRAM circuits,'" Appx1386, but later withdrew its objection and offered testimony about "DRAM circuits" at trial, Appx1394. Samsung never suggested the term "DRAM circuit" needed construction.

Samsung argues that Netlist, by withdrawing its objection, "accept[ed] that the claimed 'array dies' exclude ***all*** DRAM circuits." Samsung.Br.17. True, but Netlist's trial presentation was perfectly consistent with the view that "'array dies' exclude ***all*** DRAM circuits." Netlist presented evidence that "DRAM circuits" are

characterized by external wire connections, whereas "array dies" have internal connections, like TSVs. Netlist then showed that the accused devices include array dies, not "DRAM circuits." *See* pp. 28-29, *supra*. Samsung's contention that Netlist's arguments were inconsistent with a concession that "'array dies' exclude ***all*** DRAM circuits" is premised on accepting Samsung's view of DRAM circuits over Netlist's.[3]

Samsung urges that, because the district court's construction did not limit "DRAM circuits" to ***Rajan137's*** DRAM circuits, Netlist could not argue that "external wire bonding"—present in Rajan137—is characteristic of DRAM circuits. Samsung.Br.16-24. But Netlist presented evidence that skilled artisans would understand, ***as a general matter***, that DRAM circuits connect stacked memory layers using external wires. *See* Appx5484-98; Appx5508-19; Appx22096-97; Appx22104-21; pp. 25-27, *supra*. Samsung nowhere explains how Netlist's use of Rajan137 as one ***example*** of a DRAM circuit, among others, entitles Samsung to JMOL.

2. Samsung also argues that Netlist's position at trial contradicted its "prosecution disclaimer." Samsung.Br.18-24. But Samsung acknowledges the court

[3] Samsung's argument that Netlist's comparison of the internal TSVs in the accused devices' array dies with the external wire connections of Rajan137 and other DRAM circuits was "irrelevant," Samsung.Br.18-19, again assumes Samsung's understanding of "DRAM circuits." Again, the jury found otherwise. Appx14.

construed "array die" to reflect Netlist's disclaimer. Samsung.Br.16-17. Samsung nowhere challenges that construction. Consequently, "the question" on appeal is "whether substantial evidence supports the jury's verdict under the ***issued construction***," which it does. *Wi-Lan, Inc. v. Apple, Inc.*, 811 F.3d 455, 465 (Fed. Cir. 2016) (emphasis added).

Nevertheless, Netlist's position during trial was consistent with the prosecution history. Samsung urges that Rajan137's DRAM circuits, and Netlist's disclaimer, are not limited to "wire bonding." Samsung.Br.21-22. But Samsung does not dispute that Rajan's DRAM circuits are depicted with wire bonds. Appx5517-18(514:16-515:21). Rajan137's nebulous references to other kinds of "'electrical connections'" do not suggest those external wires can be replaced with internal TSVs, which Rajan137 never mentions. Samsung.Br.22 (emphasis removed).

II. SUBSTANTIAL EVIDENCE SUPPORTS THE INFRINGEMENT VERDICT ON THE '918 AND '054 PATENTS

The jury found that Samsung infringed at least one asserted claim of either the '918 or '054 patent and awarded damages for infringement of those patents collectively. Appx2323-26. The verdict on the '918 or '054 patents thus cannot be disturbed unless Samsung shows that no rational jury could have found that Samsung infringes even ***one*** claim of ***either*** patent. *WesternGeco L.L.C. v. ION Geophysical*

Corp., 913 F.3d 1067, 1074 (Fed. Cir. 2019). Substantial evidence supports the verdict as to ***both*** patents.

A. Substantial Evidence Supports the Jury's Finding That Samsung Infringes the '054 Patent

The '054 patent claims require a "memory module" configured to "transition[] from a first operable state to a second operable state." Appx694 (40:19-20). The parties stipulated that "second operable state" means a "state in which the memory module is operated after transition." Appx1241. No one disputes that the accused memory modules "transition[]" from a "first state" to a "second state," or that memory-module components "operate[] after transition." Samsung.Br.28 (emphasis removed); *see* Appx1241. Instead, Samsung seeks to overturn the jury's verdict because the "DRAMs"—***components*** of the module—"are turned off" in the second state. Samsung.Br.28-30.

If Samsung believed that the "second operable state" required ***all*** memory components to continue operating—or certain ones—it should have sought a construction with that requirement. *Comcast*, 850 F.3d at 1311-12. But it did not. Samsung cannot seek that construction on appeal "in the guise of a challenge to the sufficiency of the evidence." *ePlus, Inc. v. Lawson Software, Inc.*, 700 F.3d 509, 520 (Fed. Cir. 2012). Substantial evidence supports the jury's finding that, when several memory-module components are operating after transition, the memory module is operating—regardless of the DRAM chips' status.

1. Netlist proved that Samsung's memory modules are "operated after transition." Netlist's expert, Dr. Mangione-Smith, explained that a "memory module" is a circuit board that includes "DRAM" "chips" and other components. Appx5331 (328:11-20). He testified that when Samsung's memory modules detect an "overvoltage," they transition to a "second operable state." Appx5381-82 (378:13-379:10). In that state, the memory module powers off "the DRAMs," but supplies "power" to four other components "on the memory module": "the RCD, the SPD, the temperature sensor, and the PMIC." Appx5381-83 (378:25-380:1). Those components—each part of the memory module—are "active and operating" in the second state. Appx5382-83 (379:20-380:1). As the district court held, that is "substantial evidence that the memory module has a 'second operable state.'" Appx23.

2. Samsung argues that, because the "***DRAMs*** are turned off" in the second state, no reasonable jury could find that the "***memory module***" is operable. Samsung.Br.29 (emphasis added). That is meritless. The stipulated construction requires that the "***memory module***" be operable—not the DRAMs, not every component on the module, and not any specific component on the module. Appx1241 (emphasis added).

Samsung urges that the '054 patent's "main thrust" is that DRAMs operate when the module is in the second operable state. Samsung.Br.28. In a substantial-evidence challenge, however, the jury's verdict is measured against the stipulated

construction—not Samsung's characterization of the patent's "main thrust." *See Finjan, Inc. v. Blue Coat Sys., Inc.*, 879 F.3d 1299, 1306 (Fed. Cir. 2018). Samsung stipulated that "second operable state" means a "state in which the memory module is operated after transition," Appx1241, "with no further limitations," *Akamai Techs., Inc. v. Limelight Networks, Inc.*, 805 F.3d 1368, 1376 (Fed. Cir. 2015). Appeal is too late to add further limitations about which memory-module ***parts*** must operate. *Comcast*, 850 F.3d at 1311-12.

Samsung acknowledges Mangione-Smith's testimony that skilled artisans would understand memory modules to be operable when "***any*** component receives power," but dismisses it as "*ipse dixit*." Samsung.Br.30. Mangione-Smith testified, however, that a state where there is "power on the DIMM" and multiple components are "active and operating" is understood to be an "operable state." Appx5382-83 (379:7-380:6). The jury was entitled to credit that testimony.

Nor can the four active components be dismissed as "low-level," with "nothing to do with memory, transferring data, or other memory module operations." Samsung.Br.30. ***That*** is *ipse dixit*—and wrong. Mangione-Smith explained that the PMIC gives Samsung's memory modules a "30 percent improvement in power efficiency," and that the DRAMs could not "turn" "back on" without the RCD. Appx5333 (330:3-14); Appx5382-83 (379:20-380:1).

As the district court recognized, Samsung's arguments about the "second operable state" present "a classic factual dispute"—and "the jury was entitled to credit Netlist's [evidence] over Samsung's." Appx21-22.

B. Substantial Evidence Supports the Jury's Finding That Samsung Infringes the '918 Patent

The '918 patent claims require a "converter circuit." *E.g.*, Appx645(38:18-52). Samsung never asked the district court to construe that term. Ample evidence supports the jury's finding that Samsung's accused products have a "converter circuit."

Dr. Mangione-Smith explained that the accused products have a circuit called a "low drop-out," or "LDO," which "reduces an input voltage to a lower output voltage." Appx5338-39(335:4-336:17). Reflecting industry understanding, Samsung's own supplier testified that an "LDO [is] a linear voltage ***converter***." Appx5667(661:13-14) (emphasis added). A Samsung engineer conceded that "the LDO converts" the input voltage to a reduced output voltage. Appx5339(336:18-21); Appx5650(644:20-23) (similar). And Samsung's expert agreed there was "no question" that an LDO "converts an input voltage." Appx5970(950:7-23); *see* Appx5965(945:3-15); Appx5968(948:14-20); Appx5971-72(951:18-952:12); Appx5974(954:11-16). Consistent with that testimony, Mangione-Smith explained that the accused products' LDO is a "converter circuit"—a circuit that converts one "input voltage" into a different "output voltage." Appx5338-39(335:4-336:17).

Unable to dispute the evidence, Samsung again "rais[es] a claim construction argument . . . in the guise of a challenge to the sufficiency of the evidence." *ePlus*, 700 F.3d at 520. It argues that "'converter circuit'" means a device that "combine[s] a switch and an inductor and operates by turning the switch 'on and off to provide charge to an inductor.'" Samsung.Br.33-34. But the jury could credit Mangione-Smith's testimony that Samsung's LDO, which converts an "input voltage" into a different "output voltage," is a "converter circuit." Appx5338-39 (335:4-336:17). If Samsung wanted a narrower definition, "it could (and should) have sought a construction to that effect" before trial. *ePlus*, 700 F.3d at 520. Samsung did not; the argument is forfeited.

Nor can Samsung show it "'has the ***only reasonable view*** of the claim.'" *Comcast*, 850 F.3d at 1312 (emphasis added). Samsung cites its employees' testimony, which its expert parroted, about "differences" between ***specific*** converter circuits ("buck, boost, and buck-boost converters") and LDOs. Samsung.Br.33-35. But that at most raises a fact dispute over whether LDOs are converters—one the jury was entitled to resolve in Netlist's favor. *Comcast*, 850 F.3d at 1312. Samsung complains that "[t]he district court erroneously shifted the burden to Samsung" at JMOL, Samsung.Br.32, but the court was right to do so: Samsung had the burden of proving its entitlement to JMOL. *Comcast*, 850 F.3d at 1312.

Netlist's (and the jury's) understanding of "'converter circuit'" is not "meaningless" or "purely functional." Samsung.Br.31-33. As the district court explained post-trial, the plain meaning of "'converter circuit'" merely "requires electrical components for voltage conversion." Appx19. That, the court found, "is just broad"—not "'meaningless.'" Appx19. A court must allow claim terms their "ordinary breadth," even where they have "facially broad ordinary meaning." *Mirror Worlds Techs., LLC v. Meta Platforms, Inc.*, 122 F.4th 860, 871 (Fed. Cir. 2024). Samsung cannot show that "the only reasonable view" of the plain meaning of "converter circuit" ***excludes*** the accused products' LDOs. *Comcast*, 850 F.3d at 1312.

III. SUBSTANTIAL EVIDENCE SUPPORTS THE INFRINGEMENT VERDICT ON THE '339 PATENT

The district court construed the '339 patent's claims to require "multiple" byte-wise data paths, wherein "'one'" path is "'enabl[ed]'" "'while the other possible paths are disabled.'" Appx9; Appx1359. The court found substantial evidence that Samsung's accused devices practice that limitation under ***two*** independent theories. Appx8-10. The jury could have credited Dr. Mangione-Smith's testimony that the two four-bit (half-byte) write paths constitute two "'byte-wise data paths'"; ***or*** the jury could have credited McAlexander's testimony that there are two eight-bit (one-byte) paths, one read path and one write path. Appx8-10. On appeal, Samsung challenges ***only*** the former theory. *See* Samsung.Br.37-42. Because

Samsung leaves an independent basis for the judgment uncontested, its challenge is moot. And its arguments fail regardless.

A. Samsung's Challenge Is Moot

When a judgment rests on multiple, independent grounds, the appellant can overturn the decision only by successfully challenging ***each*** ground. *E.g.*, *LSI Corp. v. Regents of Univ. of Minn.*, 43 F.4th 1349, 1355 (Fed. Cir. 2022). Thus, where the appellant "only challenges one of multiple independent grounds that the district court articulated," the challenge is "moot." *Acceleration Bay LLC v. 2K Sports, Inc.*, 15 F.4th 1069, 1076 (Fed. Cir. 2021). Indeed, where a verdict could be based on either of two theories, one supported by legally sufficient evidence and the other not, courts presume that the jury relied on the adequately supported theory. *Griffin v. United States*, 502 U.S. 46, 56-69 (1991).

That rule dooms Samsung's effort to obtain JMOL of non-infringement for the '339 patent: Samsung challenges only one of two independent factual bases supporting infringement. As the district court found, the jury could have accepted Mangione-Smith's testimony that the two four-bit write paths constitute "byte-wise" data paths. Appx8-9; pp. 16-18, *supra*. ***Or*** the jury could have accepted McAlexander's testimony that the buffers contain two byte-wise data paths because the buffers have an eight-bit (one-byte) read path and an eight-bit (one-byte) write path. Appx9-10; pp. 16-18, *supra*. Samsung's appeal addresses ***only*** the first theory:

Samsung urges that the two four-bit write paths Mangione-Smith identified are not "byte-wise" because, in Samsung's view, "byte-wise" requires an "eight-bit"—one-byte—data path. Samsung.Br.37-42.

That leaves the district court's second rationale for upholding the verdict unchallenged. The court explained that Samsung's own expert, McAlexander, testified that the read and write paths both ran through the buffer, with only one enabled at a time, satisfying the court's "multiple" paths construction. Appx9-10. And McAlexander insisted that each path transmitted eight bits—one byte—satisfying the "byte-wise" limitation even under Samsung's construction. *See* Appx18101; Appx18179-81. While Samsung argued below that both paths must be ***write*** paths, Appx18180, the district court disagreed, explaining that "[n]othing in the Court's Claim Construction Order" imposed that limitation, Appx9-10.

Samsung's opening brief ignores the court's second, independent ruling. That waives any challenge to it on appeal. *SmithKline Beecham Corp. v. Apotex Corp.*, 439 F.3d 1312, 1320 (Fed. Cir. 2006). Consequently, even if Samsung succeeded on the issue it ***did*** raise—whether there was sufficient evidence that the four-bit paths are "byte-wise"—the alternative ground would remain "intact." *Acceleration Bay*, 15 F.4th at 1076; *see i4i Ltd. P'ship v. Microsoft Corp.*, 598 F.3d 831, 849-50 (Fed. Cir. 2010). Samsung's challenge is therefore "moot," and should be ignored.

B. Substantial Evidence Supports the Jury's Finding That Half-Byte Paths Are "Byte-Wise Data Paths"

In any event, substantial evidence supports the jury's finding that half-byte paths are "byte-wise" paths. Mangione-Smith explained that skilled artisans would understand "byte-wise" to mean "measured in terms of bytes." Appx5456-57(453:25-454:5). Mangione-Smith testified that the accused products satisfy the claims' requirement of "byte-wise" paths because they contain two four-bit (*i.e.*, half-byte) write paths. Appx5394-96(391:16-393:20).[4]

Samsung nonetheless contends that the "two ***four***-bit pathways" are insufficient because, in its view, "byte-wise" means ***eight*** bits wide. Samsung.Br.38 (emphasis added). But that is a claim-construction argument. Samsung never asked the district court to construe "byte-wise" to mean "eight bits wide," *see* Appx1183-89, and thus forfeited the issue, *ePlus*, 700 F.3d at 520.

"In the absence of" a claim construction, "the jury was free to rely on the plain and ordinary meaning" of the term "byte-wise." *ePlus*, 700 F.3d at 520. As Mangione-Smith testified, the claim "refers to a byte-***wise*** data path, not a byte-***wide*** data path"—thus, skilled artisans would ***not*** understand the claim to require that the data path be one byte wide. Appx5446(443:2-16); Appx5456(453:20-24) (emphasis

[4] Samsung concedes there are ***two*** write paths, thus satisfying the "multiple" paths limitation. *See* p. 40, *supra*; Samsung.Br.38. And Samsung does not dispute that one is enabled while the other is disabled. *See* Samsung.Br.37-42; p. 40, *supra*.

added). The jury could readily credit Mangione-Smith's testimony that the two four-bit write paths are "byte-wise" paths.

Samsung dismisses Mangione-Smith's testimony as a "naked assumption." Samsung.Br.38. But the '339 patent supports that definition. Claim 1 recites both "byte ***wide***" and "byte-***wise***" data paths. Appx595(19:14-15, 19:54-67) (emphasis added). The claim's use of two different terms raises a presumption that those terms "have different meanings." *Helmsderfer v. Bobrick Washroom Equip., Inc.*, 527 F.3d 1379, 1382 (Fed. Cir. 2008). Samsung insists Mangione-Smith's reading would "strip[ ]" the byte-wise limitation "of all meaning." Samsung.Br.39. But it is Samsung's interpretation that would read "byte-wise" to mean the same thing as "byte wide."

The specification further confirms that "byte-wise" does not mean "eight bits wide." It ***expressly*** uses the term "byte-wise" to describe the buffer with four-bit-wide paths depicted in Figure 4B. *See* Appx592(14:1-18). That the specification also uses "byte-wise" "to describe eight-bit-wide data paths" does not help Samsung, Samsung.Br.41; it merely confirms that " 'byte-wise' " means "measured in terms of bytes." Samsung.Br.38. Such "[v]aried use of a disputed term . . . demonstrates the breadth of the term rather than providing a limited definition." *Johnson Worldwide Assocs., Inc. v. Zebco Corp.*, 175 F.3d 985, 991 (Fed. Cir. 1999).

The specification consistently uses the term "wide" (*e.g.*, "byte-wide," "nibble-wide," "N-bit-wide")—not "wise"—when specifying the width of data paths or devices. *See, e.g.*, Appx594(17:30-32) ("a nibble-wide data path or a bytewide-data path"); Appx586(1:37-43) ("64 bits wide . . . 72-bit-wide"). That is consistent with claim 1, which uses "wide," not "wise," when specifying width.

Samsung's argument that "'byte-wise'" is the "compound adjective" form of "'byte wide,'" Samsung.Br.40, lacks merit. The term "bit-***wide***" is used as a "compound adjective" throughout claim 1. Appx595(19:9-67) ("N-bit-wide memory module . . . N-bit-wide data signal lines . . . N-bit-wide ranks . . . N-bit-wide write data"). That disproves Samsung's theory that "wise" is the adjectival form of "wide." More-than-substantial evidence supports the verdict.[5]

IV. SUBSTANTIAL EVIDENCE SUPPORTS THE JURY'S DAMAGES AWARD

A jury's damages award must be upheld unless it is "'grossly excessive or monstrous, clearly not supported by the evidence, or based only on speculation or guesswork.'" *Monsanto Co. v. Ralph*, 382 F.3d 1374, 1383 (Fed. Cir. 2004). The jury's award here is none of those things. It was amply supported by the incremental

[5] Samsung's one-sentence request for a "new trial" on infringement, Samsung.Br.16, is undeveloped and forfeited, *In re Killian*, 45 F.4th 1373, 1385-86 (Fed. Cir. 2022). Regardless, the verdict is not "against the weight of the evidence," Samsung.Br.16, for the reasons above.

value of the patented technology and the parties' bargaining positions in a hypothetical negotiation. *See* pp. 18-21, *supra*.

Samsung purports to challenge evidentiary sufficiency. But its complaints concern the "methodology used by" Netlist's experts. *Versata*, 717 F.3d at 1264. Such complaints "should be resolved under the framework of the Federal Rules of Evidence and through a challenge under *Daubert*," not an evidentiary-sufficiency challenge seeking JMOL. *Id.* The vast majority of Samsung's "JMOL" arguments thus are waived. Regardless, Netlist's experts' methodologies were sound. The damages award is amply supported.

A. Netlist's Damages Case Was Methodologically Sound and Amply Supported

A patentee is entitled to a "reasonable royalty" reflecting the "'value of what was taken.'" *Ericsson*, 773 F.3d at 1226. Netlist's damages expert, Kennedy, presented a hypothetical-negotiation royalty model under the *Georgia-Pacific* framework that reflected only the ***incremental*** revenue attributable to the patented technology. Appx5691-92 (685:8-686:11).

1. One way of determining the "'value'" of "what was taken" is by analyzing what customers pay for the infringing goods compared to non-infringing alternatives. *AstraZeneca AB v. Apotex Corp.*, 782 F.3d 1324, 1344 (Fed. Cir. 2015). Kennedy determined the "value" of the patented technology by doing exactly that: assessing the price difference between products with Netlist's technology and

Samsung's next-best alternatives. Appx5709 (703:23-25). That shows how much of Samsung's revenue is attributable to Netlist's patented technology. Appx5704-05 (698:17-699:16).

For the '918 and '054 patents, Kennedy calculated the price difference between a Samsung DDR5 module with Netlist's technology and a module without it. Appx5704-05 (698:17-699:15). For the '339 patent, Kennedy compared the price of Samsung's two-DIMM-per-channel module (with Netlist's technology) to the price of a single-DIMM-per-channel module (without Netlist's technology). Appx5706 (700:6-25). And for the '060 and '160 patents, Kennedy compared the price of Samsung's eight-die-high stacked memory product (with Netlist's technology) to its four-die-high product (without Netlist's technology). Appx5707-09 (701:15-703:3).

2. Kennedy then applied the *Georgia-Pacific* factors to determine how the parties would have allocated the value attributable to Netlist's technology in a hypothetical reasonable-royalty negotiation. Several factors would have "adjust[ed]" the royalty "upward." Appx5693-94 (687:20-688:8).

The parties' licensing history revealed that Samsung "really needs Netlist technology." Appx5693-94 (687:25-688:8). To secure rights to Netlist's patents, Samsung had previously entered a valuable joint development and supply agreement with Netlist. Appx5693-94 (687:25-688:8); Appx17546. The memory-module market, moreover, is cutthroat. "[T]wo other big players," Micron and SK hynix,

stood ready to take Samsung's customers if Samsung's technology could not compete. Appx5712 (706:4-14). And at the time of the hypothetical negotiation, Samsung was already "behind" on developing DDR5 memory modules and high-bandwidth-memory products. Appx5700 (694:10-15); Appx5707-08 (701:18-702:27); Appx5712 (706:18-23); Appx5656 (650:11-13). Obtaining Netlist's cutting-edge technology thus would have been "particularly important" to Samsung. Appx5700 (694:10-22).

Netlist correspondingly would have demanded a premium royalty. Critically, Netlist had "never licensed its patents outside of a strategic agreement." Appx5692-93 (686:20-687:3). Netlist's previous licenses to Samsung and SK hynix involved strategic partnerships with "highly valuable supply agreement[s]"—Netlist's own agreement with Samsung was worth over $60 million per year. Appx5693 (687:4-8); Appx5695 (689:2-9). Absent such benefits in the hypothetical license, the royalty rate would have to increase.

Based on those considerations, Kennedy concluded that Netlist would accept a license only for the full incremental monetary value of its patented contributions, and that Samsung would agree. Appx5720-21 (714:24-715:18); Appx5765 (759:10-13). Doing so would "still le[ave]" Samsung "with a significant profit" on sales of accused devices—indeed, all profits ***not*** attributable to Netlist's technology. Appx5711 (705:18-23). The jury awarded Netlist $303 million in reasonable-royalty

damages, Appx2326, about 75% of what Netlist sought, Appx5721 (715:14-18). The district court correctly held that substantial evidence supported that award. Appx42-58.

B. Kennedy Properly Allocated Netlist the Incremental Revenue Attributable to the Patented Features

1. *Kennedy Was Entitled To Base the Royalty on Revenues, Rather Than Profits*

Samsung first urges that Kennedy was required to base the royalty on Samsung's "incremental profits," rather than incremental revenues attributable to Netlist's patented technology. Samsung.Br.43-46. That is a challenge to Kennedy's ***methodology***, which should have been addressed "under *Daubert*"—it is not a sufficiency-of-evidence issue. *Versata*, 717 F.3d at 1264. Samsung's arguments thus must be "reject[ed] as improperly raised." *Id.*

Samsung also misunderstands the law. Patent damages compensate for "'the pecuniary loss [the patentee] has suffered from the infringement, ***without regard to the question whether the defendant has gained or lost*** by his unlawful acts.'" *Aro Mfg. Co. v. Convertible Top Replacement Co.*, 377 U.S. 476, 507 (1964) (emphasis added). What matters is "'the value of what was taken,'"—"'the value of the use of the patented technology.'" *AstraZeneca*, 782 F.3d at 1344 "The fact that [an] award was not based on the infringer's profits" does not "make it an unreasonable award." *Rite-Hite Corp. v. Kelley Co., Inc.*, 56 F.3d 1538, 1555 (Fed. Cir. 1995).

"[I]t is settled law that an infringer's net profit margin is not the ceiling by which a reasonable royalty is capped." *Powell v. Home Depot U.S.A., Inc.*, 663 F.3d 1221, 1238 (Fed. Cir. 2011). Thus, this Court has approved royalties that ***exceed*** the direct monetary benefit "conferred to the infringer by use of the patented technology." *Id.* at 1237-42; *see also Slimfold Mfg. Co. v. Kinkead Indus., Inc.*, 932 F.2d 1453, 1458 (Fed. Cir. 1991) (upholding award of "all profits").

Samsung urges that "Kennedy's omission of Samsung's incremental costs is inexcusable." Samsung.Br.44. But the "value of what was taken," *Ericsson*, 773 F.3d at 1226—the value of the patented technology—does not fluctuate depending on whether the infringer is cost-efficient or charges too little for its products. "Thus, the royalty the particular infringer could profitably pay by going about its business in its particular way does not set the market value that the hypothetical negotiation aims to identify." *Aqua Shield v. Inter Pool Cover Team*, 774 F.3d 766, 771 (Fed. Cir. 2014).

Samsung cites *ResQNet.com, Inc. v. Lansa, Inc.*, 594 F.3d 860 (Fed. Cir. 2010), and *Transclean Corp. v. Bridgewood Services, Inc.*, 290 F.3d 1364 (Fed. Cir. 2002), for the proposition that "failure to account for . . . incremental costs renders" a theory "legally insufficient." Samsung.Br.44-45. But those cases merely articulate the general sufficiency-of-evidence standard. *ResQNet*, 594 F.3d at 872; *Transclean*, 290 F.3d at 1370. Neither addresses "incremental costs" ***at all***, much less

suggests that failure to consider incremental costs renders expert testimony "legally insufficient."

Samsung also cites *Aqua Shield*. Samsung.Br.43. But *Aqua Shield* did not hold that a reasonable royalty ***must*** be based on profits—it faulted the "district court's particular use of [the infringer's] profits" "as a royalty cap." 744 F.3d at 772. And while *VLSI Technology LLC v. Intel Corp.*, 87 F.4th 1332, 1346 (Fed. Cir. 2023) (cited Samsung.Br.45), referred to the "profit-making potential of use of the patented technology," it did not address, much less condemn, a revenue-based reasonable-royalty model. Neither case, moreover, remotely suggests that improper use of profits is an issue of "legal[ ]" sufficiency. Samsung.Br.44-45.

Samsung's contention that Kennedy "***could have*** analyzed Samsung's costs to implement the . . . patented features and offset them" is irrelevant. Samsung.Br.44 (emphasis added). Kennedy was not ***required*** to calculate a royalty based on Samsung's incremental profits, and thus not required to subtract incremental costs. *Aqua Shield*, 774 F.3d at 771. "That a party may choose to pursue one course of proving damages over another does not render its expert's damages testimony inadmissible." *Apple Inc. v. Motorola, Inc.*, 757 F.3d 1286, 1315, 1325 (Fed. Cir. 2014). And Samsung does not argue there is insufficient evidence to support Kennedy's revenue-based theory.

2. *Kennedy Did Not Apply a "100%-of-Revenue Rule of Thumb"*

After apportioning down to the incremental value added by Netlist's inventions, Kennedy allocated that value between the parties. Samsung contends Kennedy, in doing so, "applied a 100%-of-revenue rule of thumb." Samsung.Br.46. That is another *Daubert* challenge "improperly raised" as a sufficiency-of-the-evidence challenge. *Versata*, 717 F.3d at 1269. It, too, fails on the merits: Kennedy allocated only ***incremental*** revenue to Netlist, and did not apply a rule of thumb.

Samsung urges that allocating "Netlist 100% of the revenue . . . corresponding to the patented technology" contravenes *Lindemann Maschinenfabrik GmbH v. American Hoist & Derrick Co.*, 895 F.2d 1403 (Fed. Cir. 1990). Samsung.Br.46 (emphasis omitted). But *Lindemann* found it "absurd" that an infringer "'would agree to pay a royalty in excess of what it expected to make in profit'" on "***the entire machine***" so as to lose money on every sale. *Id.* at 1407-08 (emphasis added). Kennedy did not say that Samsung would agree to pay Netlist ***all*** of its revenues associated with the accused products; he said Samsung would pay the ***incremental*** revenue attributable to the patented inventions. And the evidence showed that the accused products are "very profitable"—Samsung makes "a 50[%] margin on them." Appx5711 (705:20-23). Samsung would retain "significant profit" from selling accused devices even after subtracting the revenue attributable to Netlist's patented technology. Appx5705 (699:9-16); Appx5765 (759:10-13); Appx5711 (705:18-23).

Samsung's effort to cast Kennedy's allocation as a "rule of thumb," Samsung.Br.47, is baseless. This Court has held that it is improper for an expert to apply, as a "rule of thumb," an arbitrary assumption about how the patentee and the infringer would divide value attributable to the patented invention. *Uniloc USA, Inc. v. Microsoft Corp.*, 632 F.3d 1292, 1311 (Fed. Cir. 2011) (expert assumed "25% of the value of the product would go to the patent owner"); *VirnetX, Inc. v. Cisco Sys., Inc.*, 767 F.3d 1308, 1331 (Fed. Cir. 2014) (expert "began with the assumption that each party would take 50% of the incremental profits").

Kennedy's testimony suffers no such defect—he did not apply ***any*** baseline assumption about how the parties would divide the value attributable to Netlist's patents. His allocation was grounded in the specific facts of this case: He explained that Netlist would demand a premium royalty because it would not be receiving the strategic supply agreements it insists upon in real-world licenses, and that Samsung would agree because of the extreme competitive pressures it faced in the DIMM marketplace. *See* pp. 19-20, 47-48, *supra*. Even if such a deal reduced profit margins, that was preferable to losing sales entirely to Micron or SK hynix. Appx5712(706:5-13).

Samsung's passing assertion that the royalty calculation amounted to "disgorgement of profits," Samsung.Br.48, fares worse. That argument is so undeveloped as to be forfeited. Besides, the jury did not award Netlist disgorgement, re-

quiring Samsung to break even on its sales. It awarded a reasonable royalty, as permitted by 35 U.S.C. § 284.

3. *Samsung Never Argues That the Jury's Actual Award—75% of Netlist's Request—Is Unsupported*

Despite purporting to challenge the sufficiency of the evidence supporting the damages award, Samsung never addresses the jury's ***actual*** award. It complains about Netlist's "position below." Samsung.Br.42. But the jury gave Netlist only "75% of [its] proposed sum." Appx18147. Samsung nowhere argues that ***that*** figure is unsupported by substantial evidence. Far from being "immaterial," Samsung.Br.45, the fact that the jury awarded only ***75%*** of incremental revenues moots Samsung's complaint that it would be improper to award ***100%*** of incremental revenues.

Samsung invokes *Uniloc's* statement about the futility of "adjusting" a methodology's "flawed premise[s]." Samsung.Br.45. But *Uniloc* was a *Daubert* challenge to an expert's methodology. 632 F.3d at 1317. Samsung, by contrast, challenges the sufficiency of the evidence supporting the jury's verdict. And for evidentiary sufficiency, a jury can "choose an intermediate" royalty that differs from what the parties proposed, so long as the evidence supports it. *Versata*, 717 F.3d at 1268. The evidence here does.

C. Kennedy Properly Apportioned

Samsung makes several cursory arguments that Netlist "failed adequately to apportion" the Samsung revenues "attributable to the asserted patents." Samsung.Br.48. Those, too, are *Daubert* challenges "improperly raised" as sufficiency-of-the-evidence challenges. *Versata*, 717 F.3d at 1264. Samsung is also wrong. Kennedy properly "value[d] the infringed features," "comparing" (among other things) "the accused product to non-infringing alternatives." *Summit 6, LLC v. Samsung Elecs. Co.*, 802 F.3d 1283, 1296 (Fed. Cir. 2015). Samsung debates the selection of non-infringing alternatives, but that is not grounds for JMOL.

1. *The '054 and '918 Patents*

Kennedy properly apportioned the value of the '054 and '918 patents. Those patents cover an innovation in memory-module power management that includes an "on-module" power management integrated circuit or "PMIC." Appx5332-33 (329:18-330:10). As Netlist's expert Mangione-Smith testified, Samsung itself advertised that, "by using an on-[module] PMIC, . . . they were able to achieve a 30 percent improvement in power efficiency." Appx5333 (330:3-10).

> systems. Unlike DDR4, DDR5 directly incorporates a power management integrated circuit (PMIC) into a dual in-line memory module (DIMM), resulting in a 30 percent increase in power efficiency on the module level and a more stable power supply.
>
> SAMSUNG

Appx22203. That 30% improvement in power efficiency, which Samsung attributed to onboard power management, properly factored into Kennedy's royalty calculation. Appx5699-705 (693:23-699:16). The increased efficiency allowed Samsung to increase speed, which translated to increased prices. Appx5385-86 (382:24-383:8); Appx5702-05 (696:2-699:8). Samsung suggests its "marketing materials" are inaccurate because the 30% efficiency gain "captur[ed]" other "advances from the . . . DDR5 standard." Samsung.Br.50 & n.9 (citing Appx22203). That argument was for the jury, not this Court on JMOL.

Samsung's contention that its PMIC contains "unpatented features," Samsung.Br.50, misunderstands the law. Apportionment does not require "that the value of all conventional elements . . . ***be subtracted*** from the value of the patented invention as a whole." *AstraZeneca*, 782 F.3d at 1339 (emphasis added). Rather, "the question is how much new value ***is created by the novel combination***, beyond the value conferred by the conventional elements alone." *Id*. (emphasis added). Kennedy properly valued the novel "combination" by calculating the incremental value of the infringing devices compared to the next-best alternative. *See Summit 6*, 802 F.3d at 1296. The next-best alternative that Kennedy used, moreover, ***also*** has a PMIC—one without the voltage regulation recited in Netlist's claims. Appx5774 (768:5-19). Thus, Kennedy apportioned out the value of any "conven-

tional elements" within the PMIC, limiting his royalty calculation to the power-management enhancements of Netlist's invention.

2. *The '339 Patent*

Kennedy appropriately calculated the incremental value attributable to the '339 patent. Technical expert Mangione-Smith testified that the '339 patent allows two DIMMs to operate on the same channel, "doubl[ing]" memory "capacity." Appx5403 (400:8-23). Based on that testimony, Kennedy identified the "next best alternative" as using "one DIMM per channel but with a larger capacity," which would require Samsung to reduce prices by 15%. Appx5706-07 (700:18-701:3).

Samsung urges that the ability to use "two DIMMs per channel" was not tied to "any claimed advance of the '339 patent." Samsung.Br.51; Appx5403 (400:8-23). But Netlist's technical expert explained that the '339 patent's load-reduction benefits permitted that advance. Appx5386-89 (383:13-386:9). Without that patent's technology, load, noise, and crosstalk on shared data lines prevented manufacturers from having more than one DIMM per channel while maintaining "DDR4 speeds." Appx5386-89 (383:13-386:9); Appx593-94 (16:67-17:6). With Netlist's technology, manufacturers could use two DIMMs per channel, "doubl[ing]" capacity, while retaining speed. Appx5403 (403:18-23).

Netlist's expert never conceded the patented invention was "known in the prior art," Samsung.Br.52—a validity, not damages, issue. The expert testified that the claims' "distributed buffer architecture" was novel. Appx5459 (456:14-22).

3. *The '060 and '160 Patents*

Kennedy also properly apportioned the value of the '060 and '160 patents. Netlist's technical expert, Dr. Brogioli, testified that those patents enabled eight-high stacks of array dies that were faster, consumed less power, and had more memory capacity than their four-high predecessors. Appx5543-44 (540:18-541:18). Kennedy's royalty calculation reflected the price difference between the eight-high stacks and the four-high non-infringing alternative. Appx5707-09 (701:15-703:3).

Samsung contends that Brogioli "failed to consider prior art in assessing the technical benefits of the '060 and '160 patents." Samsung.Br.52. But Brogioli analyzed the prior art, testifying that the prior-art "multi-drop" configuration had "limitations when trying to even get to [an] eight high solution," and that Netlist's innovative "array grouping strategy" was "necessary" for eight-high stacks. Appx5543-44 (540:19-541:18). Samsung says Brogioli should have considered a "better alternative" based on an article by its engineer. Samsung.Br.53. That is a jury argument. Regardless, Brogioli testified that he considered the article and still concluded that Netlist's invention was "required" to achieve "products that have eight stacks or higher." Appx5543-44 (540:18-541:18).

4. *Netlist Was Not Required To Show "Available and Commercially Acceptable" Non-Infringing Alternatives*

Samsung also urges that Kennedy had to show any non-infringing alternatives were "available and commercially acceptable by the time of the hypothetical negotiation." Samsung.Br.53. But no authority requires a patentee to demonstrate that its non-infringing alternatives are "available and commercially acceptable" as a prerequisite to seeking a ***reasonable royalty***.

As the district court found, Samsung's argument conflates reasonable-royalty damages with lost-profits damages. Appx54-55. In the lost-profits context, the plaintiff must show the absence of commercially "acceptable" substitutes in order to prove it would have made sales but-for the infringement. *See, e.g.*, *Presidio Components, Inc. v. Am. Tech. Ceramics Corp.*, 875 F.3d 1369, 1380 (Fed. Cir. 2017); *Grain Processing Corp. v. Am. Maize-Prods. Co.*, 185 F.3d 1341, 1351 (Fed. Cir. 1999) (cited Samsung.Br.54). But in a hypothetical negotiation, while the presence of a commercially-acceptable non-infringing alternative ***may*** be one relevant consideration among many, its absence does not render the damages theory unsound. *See Aqua Shield*, 774 F.3d at 771-72.

Regardless, Samsung's argument is backwards: Absence of acceptable alternatives would only ***increase*** the royalty; for the infringer, it is the invention or nothing. As Kennedy explained, if there were "no actual alternative" to using Netlist's technology here, Samsung "would lose the sale" entirely. Appx5701 (695:10-17).

Netlist's model, which gave Samsung the "benefit of the doubt" by assuming non-infringing alternatives, was conservative. Appx5701 (695:18-22). And Samsung, having chosen "not to introduce argument or evidence of a different non-infringing alternative . . . cannot complain that the jury credited the only theory presented to it." *Prism Techs. LLC v. Sprint Spectrum L.P.*, 849 F.3d 1360, 1376 (Fed. Cir. 2017).

D. Samsung's Damages Arguments Do Not Warrant JMOL Regardless

Samsung argues that, if this Court finds the damages award wanting, it should "instruct the district court to enter JMOL of no damages." Samsung.Br.55. For the reasons above, the damages award is amply supported. But if the Court disagrees, "[t]he proper relief" is a new trial, not JMOL. *VLSI*, 87 F.4th at 1349; *see also Lucent Techs., Inc. v. Gateway, Inc.*, 580 F.3d 1301, 1335 (Fed. Cir. 2009); *Whitserve, LLC v. Comput. Packages, Inc.*, 694 F.3d 10, 18 (Fed. Cir. 2012).

Samsung's sole authority, *Promega Corp. v. Life Technologies Corp.*, 875 F.3d 651 (Fed. Cir. 2017), is distinguishable. There, the patentee expressly ***waived*** any damages theories other than the faulty one it presented to the jury. *Id*. at 657. Not so here: Kennedy noted that he had considered other methods that would produce different damages (*e.g.*, comparing Netlist's and Samsung's R&D spend or their gross margins); Netlist never disclaimed other theories. Appx5710 (704:1-25).

V. SAMSUNG IS NOT ENTITLED TO A NEW TRIAL ON DAMAGES

Seeking a new trial, Samsung raises a grab-bag of *Daubert* challenges. But those complaints go to weight, not admissibility.

A. The District Court Properly Admitted Kennedy's License Analysis

Samsung argues that Kennedy should not have been permitted to testify about Samsung's license with a third party, Rambus, and should have been required to rely on Netlist's licenses with Samsung and SK hynix because they were (in Samsung's view) more comparable. Samsung.Br.58-59. Those arguments defy precedent. The "'degree of comparability'" is "appropriately left for the jury." *Bio-Rad Labs., Inc. v. 10X Genomics Inc.*, 967 F.3d 1353, 1373-74 (Fed. Cir. 2020). Admitting Kennedy's license testimony was within the district court's discretion.

1. *Kennedy's Use of the Rambus License Was Proper*

Kennedy opined that a prior license between Rambus and Samsung was "relevant" to the hypothetical negotiation. Appx18362(¶464). Relying on analysis by Netlist's technical expert Dr. Mangione-Smith, Kennedy noted that the Rambus license involved "very similar technology" that was "technically comparable to the Patents in Suit." Appx18362(¶465). The circumstances surrounding the Rambus license were also comparable to those surrounding the hypothetical negotiation between Samsung and Netlist: That license, too, was negotiated after Samsung's "failure to perform" under a previous license, and after suit for infringement. Appx18362-63(¶466).

Kennedy relied on the Rambus license to opine that, in "the big picture," Samsung faced significant pressure to secure the rights to critical memory technology. Appx5697-99 (691:1-693:4). The fact that Samsung had agreed to pay Rambus significant compensation for comparable technology in closely analogous circumstances, Appx18347-50 (¶¶388-98), indicated that there would be "significant upward pressure on the royalty rate" here, Appx18363 (¶468). Because the Rambus license was a "portfolio license," Kennedy did not rely on it for a "specific per patent rate." Appx18366-67 (¶487); *see also* Appx18363 (¶467). Indeed, Kennedy told the jury that the Rambus license "should not be used to calculate the specific royalty." Appx5748 (742:17-22). The district court properly concluded that such limited reliance on the Rambus license was permissible. Appx2111; Appx282-83 (217:12-218:6).

Samsung's challenge to Mangione-Smith's analysis of the Rambus license's technical comparability, Samsung.Br.48, is forfeited: Samsung never challenged that analysis below. As Samsung's citation proves, its *Daubert* challenge below rested on the (erroneous) contention that ***Kennedy*** said the Rambus license was not comparable—Samsung never challenged ***Mangione-Smith's*** technical comparability opinions. Samsung.Br.59 (citing Appx1489-90).

Samsung's argument is also meritless. Mangione-Smith's analysis was detailed and reliable. Mangione-Smith explained that the Rambus license, like the

license here, relates to patents on memory-module technology. Appx30937-38. Samsung's expert agreed that the Rambus license contains patents "related to DRAM memory modules, stacked dies, and/or hybrid DIMMs" and that many of the patents apply to "numerous types of DDR memory." Appx20899-901 (¶¶176, 178).

Samsung complains that Mangione-Smith analyzed only a subset of the Rambus patents, Samsung.Br.59, but that was reasonable. Mangione-Smith analyzed the subset of patents "involved in the litigation between Samsung and Rambus." Appx18362 (¶465). And Kennedy explained that "a small number of patents" generally constitute "the majority of the value" in a license, and that the patents asserted in litigation are typically the most valuable. Appx5698 (692:1-7); Appx18310 (¶¶265-66); *see also* Appx30937-38. The patents Mangione-Smith analyzed were thus likely to have "driv[en] the value of the negotiation." Appx5697-98 (691:12-692:7).

Samsung's contention that the Rambus license was excluded in a "follow-on trial," Samsung.Br.59, is a red herring. Neither Samsung nor the district court's order explains ***why*** the Rambus license was excluded in that case, which involved different patents and an additional defendant. *Netlist, Inc. v. Samsung Elecs. Co.*, No. 2:22-cv-00293-JRG, Dkt. 818 at 4 (E.D. Tex. Nov. 6, 2024). The abuse-of-discretion standard, moreover, presumes a "'range'" of permissible choices. *Heat & Control, Inc. v. Hester Indus., Inc.*, 785 F.2d 1017, 1022 (Fed. Cir. 1986). The

exclusion of the Rambus license there says nothing about this case, where the license was relevant to show the high value Samsung placed on comparable memory-module technology.

Samsung's cases are beside the point. In *MLC Intellectual Property LLC v. Micron Technology, Inc.*, 10 F.4th 1358 (Fed. Cir. 2021), the expert improperly urged that a prior license obviated the need to ***apportion damages to the value of the patented invention*** without showing that the prior license involved comparable technology. *Id*. at 1374-75. Indeed, *MLC* actually supports Netlist, because the Court noted the expert's reliance on that license "may well have been proper had he merely asserted" that the license "reflect[s] a ***relevant consideration*** for evaluating a reasonable royalty," *id*. at 1368 (emphasis added)—which is what Kennedy did here, Appx5698 (692:11-21); Appx5699 (693:2-4); p. 62, *supra*.

Trell v. Marlee Electronics Corp., 912 F.2d 1443 (Fed. Cir. 1990) (cited Samsung.Br.59-60) is even further afield. There, "the district court erred in relying solely on the fee set forth in" a single license, and "fail[ed] to consider" important issues bearing on that license's comparability. *Id*. at 1446-47. Unlike in *Trell*, the factfinder here—the jury—was told not to rely on the Rambus license in setting a royalty rate, and considered the differences between the Rambus license and the asserted patents. Appx5462-64 (459:14-461:7); Appx5736-41 (730:22-735:6);

Appx5747-49 (741:15-743:7). The district court correctly let the jury decide how to weigh that evidence. *Bio-Rad*, 967 F.3d at 1373-74.

Finally, Samsung complains that Kennedy's reference to the Rambus license "'skew[ed] the damages horizon for the jury.'" Samsung.Br.60. If Samsung was worried that mentioning the $1.1 billion figure would prejudice the jury, then Samsung's counsel shouldn't have mentioned that figure himself, repeatedly, when cross-examining Kennedy. Appx5737-39 (731:2-733:1). Regardless, Samsung offers no reason to think the Rambus license ***actually*** skewed the jury's damages horizon—far from issuing a runaway verdict, it awarded far less than Rambus got and 25% less than Netlist requested. Appx2326; Appx5721 (715:14-18).

Uniloc and *LaserDynamics, Inc. v. Quanta Computer, Inc.*, 694 F.3d 51 (Fed. Cir. 2012), are distinguishable. In both, the plaintiffs introduced evidence of the defendants' total "revenue from an infringing product." *Uniloc*, 632 F.3d at 1320; *LaserDynamics*, 694 F.3d at 67-68. That "skew[ed] the damages horizon" because the reference to total revenues ran afoul of this Court's "entire market value" rule governing apportionment of patent damages. *Uniloc*, 632 F.3d at 1320; *LaserDynamics*, 694 F.3d at 67-68. Here, the Rambus license has nothing to do with Samsung's total revenues from the accused devices, and its introduction had nothing to do with the entire market value rule—it was introduced to illustrate the value of memory-module technology to Samsung.

2. *Kennedy Appropriately Considered Both the JDLA and SK hynix Licenses*

Samsung complains that Kennedy "ignor[ed] licenses to the asserted patents"—specifically, Netlist's prior licenses with Samsung and SK hynix. Samsung.Br.61 (capitalization altered). But Kennedy did not "ignore" those licenses. He discussed them at length, "not[ing] multiple differences" between them and the "hypothetical negotiation" here. Kennedy observed that both licenses were given in the context of broader strategic agreements containing "valu[able]" supply obligations and joint-development projects. Appx18319-20(¶304); Appx18339-40(¶355); Appx18340(¶357); Appx18341(¶361). Given those differences, Kennedy opined that the Samsung and SK hynix licenses were "not comparable" to the hypothetical license, which was purely a cash payment. Appx18339-40(¶¶355-56); Appx18345 (¶373).

At bottom, Samsung disagrees with Kennedy about which licenses were most relevant. But disagreement with an expert's conclusions "go[es] to the weight" of the evidence, "not its admissibility," and is "best addressed by cross examination." *ActiveVideo Networks Inc. v. Verizon Commc'ns Inc.*, 694 F.3d 1312, 1333 (Fed. Cir. 2012). Samsung had ample opportunity to cross-examine Kennedy on comparable-license issues, and did. Appx5736-41(730:22-735:6); Appx5747-49(741:15-743:7).

Regardless, Kennedy's comparability conclusions were entirely reasonable. The earlier JDLA provided for Netlist and Samsung to develop a new product; the supply component of that agreement "more than doubled" quarterly revenue for Netlist and led to a 65% increase in revenue year-over-year. Appx18322-23 (¶305(h), (m)). The SK hynix agreement, too, was a joint-development project including a supply agreement for up to $600 million of memory products. Appx18340-41 (¶¶357-58, 361). That had great value to Netlist: Even apart from monetary value, it "reestablished" Netlist's "credibility" in the industry after a period where Netlist could not fulfill orders due to Samsung's breach of the JDLA. Appx18343 (¶¶368-70).

Samsung's expert ***agreed*** that the JDLA and SK hynix agreements were different from the bare license at issue in the hypothetical negotiation. He agreed that the JDLA and SK hynix licenses were "part of bigger agreements with other commercial aspects." Appx6214-15 (1190:23-1191:24). He confirmed that both licenses involved supply agreements worth hundreds of millions in revenue. Appx6223 (1199:5-19); Appx6228-29 (1204:23-1205:6). It cannot possibly have been an abuse of discretion for the district court to permit Kennedy to say the same thing.

This case is nothing like *LaserDynamics* (cited Samsung.Br.61), where the expert's "exclusion of the . . . licenses expressly for the [asserted patents] served no

purpose other than to . . . 'increase the reasonable royalty rate.'" 694 F.3d at 80. Kennedy's decision not to rely on the JDLA and SK hynix agreements avoided presenting the jury with a false comparison that did not adequately reflect the economic compensation Netlist received.

B. No Damages Retrial Is Warranted for the '918 and '054 Patents

Samsung challenges Netlist's valuation of the '918 and '054 patents because Kennedy relied in part on a hedonic regression performed by his colleague, Dr. Groehn. Samsung.Br.62-68. Groehn examined Samsung's DDR4 invoice data to determine the relationship between memory speed and price for Samsung's products. Appx18517(¶¶15-16). Using time, capacity, and speed as variables, Groehn determined that a 1% decrease in speed would result in a 1.438% decrease in price. Appx18523(¶29, Table 2); Appx18524(¶31). Kennedy then used that speed-price coefficient to value Netlist's patented improvements to Samsung's accused DDR5 products. Appx18300-01(¶¶216-223). Without the increase in speed Netlist's technology provided, Samsung would have to sell those products for 28.8% less. Appx18440-41(Exs. 8, 9). Samsung's challenges to Groehn's regression are waived, meritless, or both.

1. *Kennedy Was Entitled To Rely on Dr. Groehn's Analysis*

Samsung demands a new trial because Netlist did not call Groehn to testify at trial. Samsung.Br.62. That argument is doubly waived. First, as the district court

observed, ***Samsung*** was free to call Groehn if it wanted to explore his regression analysis. Samsung's failure to do so waived its new-trial argument. Appx58. Second, Samsung waived the issue here by not addressing that waiver determination in its opening brief. Samsung contends the district court faulted Samsung only for "not objecting" during Kennedy's testimony. Samsung.Br.63-64. Samsung ignores the court's additional finding that Samsung could ***also*** have remedied any problem by calling Groehn itself. Samsung.Br.63-64; *see* Appx58. Samsung's failure to challenge that waiver finding, which independently supports the district court's denial of Samsung's new-trial motion, moots its appeal. *Acceleration Bay*, 15 F.4th at 1076.

On the merits, Samsung errs in characterizing Kennedy as a "mouthpiece" for Groehn. Samsung.Br.62-63. "Experts routinely rely upon other experts . . . for expertise outside of their field." *Apple*, 757 F.3d at 1321. "'Numerous courts have held that reliance on scientific test results prepared by others may constitute the type of evidence that is reasonably relied upon by experts.'" *Id.*; *see also Arctic Cat Inc. v. Bombardier Recreational Prods. Inc.*, 876 F.3d 1350, 1369-70 (Fed. Cir. 2017) (damages expert "properly relied on" another expert's "opinion").

Kennedy's discussion of Groehn's analysis is a textbook example of permissible reliance. *Apple*, 757 F.3d at 1321. Kennedy is a licensing expert, not a statistician. To determine the proper royalty rate, he relied on Groehn's "technical ex-

pertise" to analyze the "massive amount of [Samsung] sales data" and determine "the relationship between the sales prices and the speed" for Samsung's products. Appx5689-90(683:12-684:21). Kennedy then used that information in "forming his ***own*** opinion," as "expected" for a damages expert. *Ferrara & DiMercurio v. St. Paul Mercury Ins. Co.*, 240 F.3d 1, 9 (1st Cir. 2001) (emphasis added).

That Groehn was not called at trial does not render Kennedy's testimony infirm. Rule 703 contains "no general requirement that" an expert upon whom a testifying expert has relied also "testify." *Dura Auto. Sys. of Ind., Inc. v. CTS Corp.*, 285 F.3d 609, 613 (7th Cir. 2002). "[W]hen an expert relies on the opinion of another, such reliance goes to the weight, not to the admissibility of the expert's opinion." *Ferrara*, 240 F.3d at 9. Samsung explored Kennedy's reliance on Groehn on cross-examination. Appx5777-80(771:3-774:22). If Samsung wanted more, it could have called Groehn itself. Appx58.

Samsung invokes *Factory Mutual Insurance Co. v. Alon USA L.P.*, 705 F.3d 518 (5th Cir. 2013). But that case affirms the general rule that "experts may base their opinions on otherwise-inadmissible information . . . so long as the information is the sort reasonably relied upon in the experts' field." *Id.* at 523. And in *Mike's Train House, Inc. v. Lionel LLC*, 472 F.3d 398 (6th Cir. 2006), and *United States v. Grey Bear*, 883 F.2d 1382 (8th Cir. 1989), the experts improperly sought to "corroborate [their] views" by testifying that other, non-testifying experts'

conclusions matched theirs. 472 F.3d at 409; 883 F.2d at 1392-93. Kennedy, by contrast, used Groehn's statistical regression to ***draw his own conclusions***, not to bolster his credibility. There was no abuse of discretion in permitting Kennedy to rely on Groehn.

2. *Dr. Groehn's Analysis Was Relevant to DDR5 Products*

The district court committed no abuse of discretion when it permitted Kennedy to rely on a regression for ***DDR4*** products to calculate speed-to-price ratios for next-generation ***DDR5*** products. Samsung.Br. 64. Kennedy explained why the same ratios would apply; quarrels with his "factual assumptions" "'go to the weight, not admissibility, of [his] opinion.'" *ActiveVideo*, 694 F.3d at 1333. Kennedy explained that DDR4 and DDR5 products are used "in the same kinds of applications," and "go[] into the same client and server markets." Appx18300 (¶218); Appx18273 (¶103). Samsung's expert agreed that the markets for DDR4 and DDR5 were not "separate." Appx30085 (161:5-12). He further agreed that the same factors Groehn identified as driving demand for DDR4 products—"speed, density and power"—drive demand for DDR5 products. Appx30086 (165:3-7).

Samsung asserts that DDR5 and DDR4 do not have a similar speed-to-price relationship. Samsung.Br.64-65. But the only evidence Samsung cites is Mangione-Smith's statement that DDR5 was a "significant improvement" over DDR4. Samsung.Br.64-65 (citing Appx5384-85). That testimony says nothing about those

products' ***speed-to-price*** ratio. Regardless, Samsung cross-examined Kennedy on differences between DDR4 and DDR5. Appx5777-81 (771:3-775:25). The district court did not abuse its discretion in letting the jury decide whether Kennedy's reliance on the DDR4 regression was convincing. *Daubert v. Merrell Dow Pharms., Inc.*, 509 U.S. 579, 596 (1993); *Ferrara*, 240 F.3d at 9.

3. *The District Court Did Not Err in Declining To Exclude Dr. Groehn's Analysis*

Samsung urges that Groehn's regression did not account for all necessary independent variables or collinearity. Such disputes about "accuracy" again "go to the testimony's weight, . . . not its admissibility." *i4i*, 598 F.3d at 852.

Groehn utilized three variables in his analysis: speed, price, and capacity. Appx18523 (¶29). Samsung argues that Groehn should have included two ***additional*** independent variables ("Rank x Organization" and "component composition"). Samsung.Br.66. But "absent some other infirmity, . . . an analysis which accounts for the major factors" can be considered by the jury, even if it "includes less than 'all measurable variables.'" *Bazemore v. Friday*, 478 U.S. 385, 400 (1986).

That standard was met here. Samsung's expert agreed that speed, price, and capacity are the "primary drivers of pricing." Appx30086 (165:3-7). Groehn explained during his deposition that he did not include Samsung's two additional variables because they were "highly correlated with speed and capacity, and therefore, would not have added to the analysis." Appx1672 (107:8-108:1). Indeed, they

were so similar to other variables that "the regression software . . . would have kicked [them] out." Appx1672(107:8-108:1). On those facts, it was not error for Groehn to exclude Samsung's preferred variables—and certainly not error warranting a new trial.

Samsung asserts that Groehn's variables "suffer from multicollinearity." Samsung.Br.67. But Groehn checked for collinearity, conducting "a correlation analysis" "between the variables." Appx1677(155:14-22). And he explained that he was not concerned about collinearity after reviewing "the confidence interval" because "the confidence interval shows the impact of any multicollinearity, if it is present." Appx1678(159:16-160:12). Samsung comes nowhere near showing its complaints warrant a new trial.

CONCLUSION

The jury verdict should be upheld.

March 28, 2025

Respectfully submitted,

/s/ Jeffrey A. Lamken

Jeffrey A. Lamken
Counsel of Record
Michael Gregory Pattillo, Jr.
Kayvon Ghayoumi
MOLOLAMKEN LLP
The Watergate, Suite 500
600 New Hampshire Avenue, N.W.
Washington, D.C. 20037
(202) 556-2000
jlamken@mololamken.com

Elizabeth Kathleen Clarke
Bonnie K. St. Charles
MOLOLAMKEN LLP
300 N. LaSalle Street, Suite 5350
Chicago, IL 60654
(312) 450-6700

Counsel for Appellee Netlist, Inc.

FORM 19. Certificate of Compliance with Type-Volume Limitations **Form 19**
July 2020

UNITED STATES COURT OF APPEALS
FOR THE FEDERAL CIRCUIT

CERTIFICATE OF COMPLIANCE WITH TYPE-VOLUME LIMITATIONS

Case Number: 2024-2203

Short Case Caption: Netlist, Inc. v. Samsung Electronics Co., Ltd.

Instructions: When computing a word, line, or page count, you may exclude any items listed as exempted under Fed. R. App. P. 5(c), Fed. R. App. P. 21(d), Fed. R. App. P. 27(d)(2), Fed. R. App. P. 32(f), or Fed. Cir. R. 32(b)(2).

The foregoing filing complies with the relevant type-volume limitation of the Federal Rules of Appellate Procedure and Federal Circuit Rules because it meets one of the following:

☑ the filing has been prepared using a proportionally-spaced typeface and includes 13,989 words.

☐ the filing has been prepared using a monospaced typeface and includes _____ lines of text.

☐ the filing contains _____ pages / _____ words / _____ lines of text, which does not exceed the maximum authorized by this court's order (ECF No. _____).

Date: 03/28/2025

Signature: /s/ Jeffrey A. Lamken

Name: Jeffrey A. Lamken