US 20070243872A1

(19) United States

(12) Patent Application Publication

(10) Pub. No.: US 2007/0243872 A1

(43) Pub. Date: Oct. 18, 2007

Gallagher et al.

(54) **METHOD OF PROVIDING IMPROVED INTEGRATED COMMUNICATION SYSTEM DATA SERVICE**

(76) Inventors: **Michael D. Gallagher**, San Jose, CA (US); **Patrick Tao**, San Jose, CA (US); **Milan Markovic**, Pleasanton, CA (US)

Correspondence Address:
ADELI LAW GROUP, A PROFESSIONAL LAW CORPORATION
1875 CENTURY PARK EAST, SUITE 1360
LOS ANGELES, CA 90067 (US)

(21) Appl. No.: **11/737,128**

(22) Filed: **Apr. 18, 2007**

Related U.S. Application Data

(60) Provisional application No. 60/793,196, filed on Apr. 18, 2006.

Publication Classification

(51) **Int. Cl.**
H04Q 7/20 (2006.01)

(52) **U.S. Cl.** **455/436**

(57) **ABSTRACT**

Some embodiments provide a method and apparatus for seamlessly providing voice and data services across a licensed wireless network while accessing a second different communication network through a user equipment. The first and second communication networks include licensed wireless networks, unlicensed wireless networks, or Internet Protocol (IP) networks, to name a few. Furthermore, some embodiments of the second communication network include a modified interface for directly interfacing with components of the first communication network in order to pass and retrieve data packets from the user equipment.

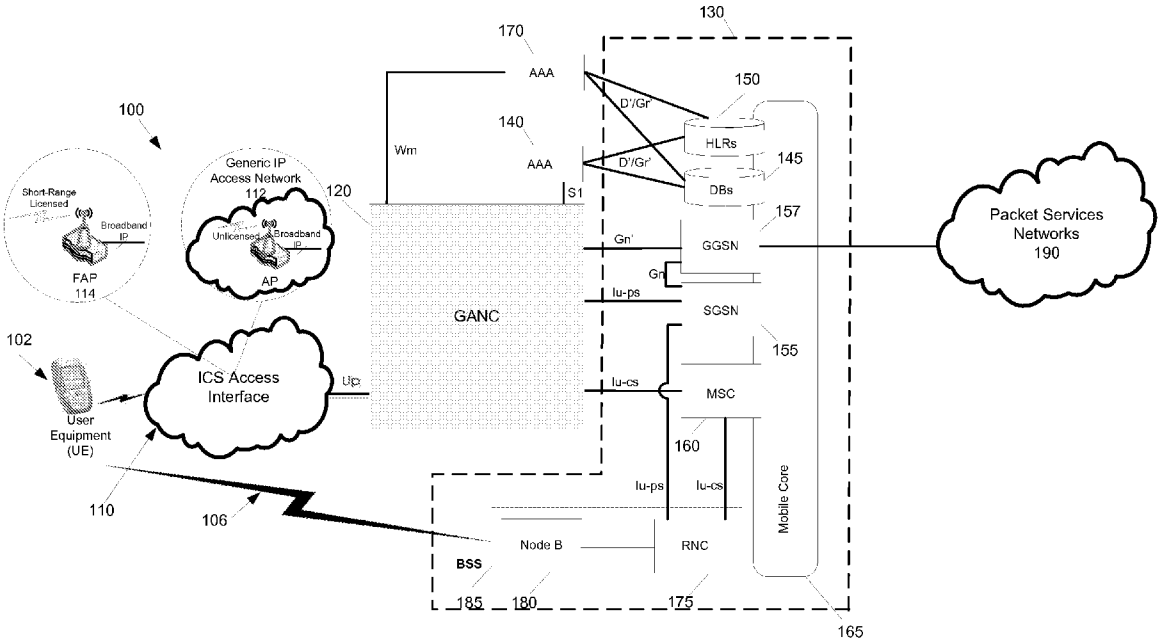

GOOGLE EXHIBIT 1033
Google LLC v. Telcom Ventures LLC
IPR2025-01409

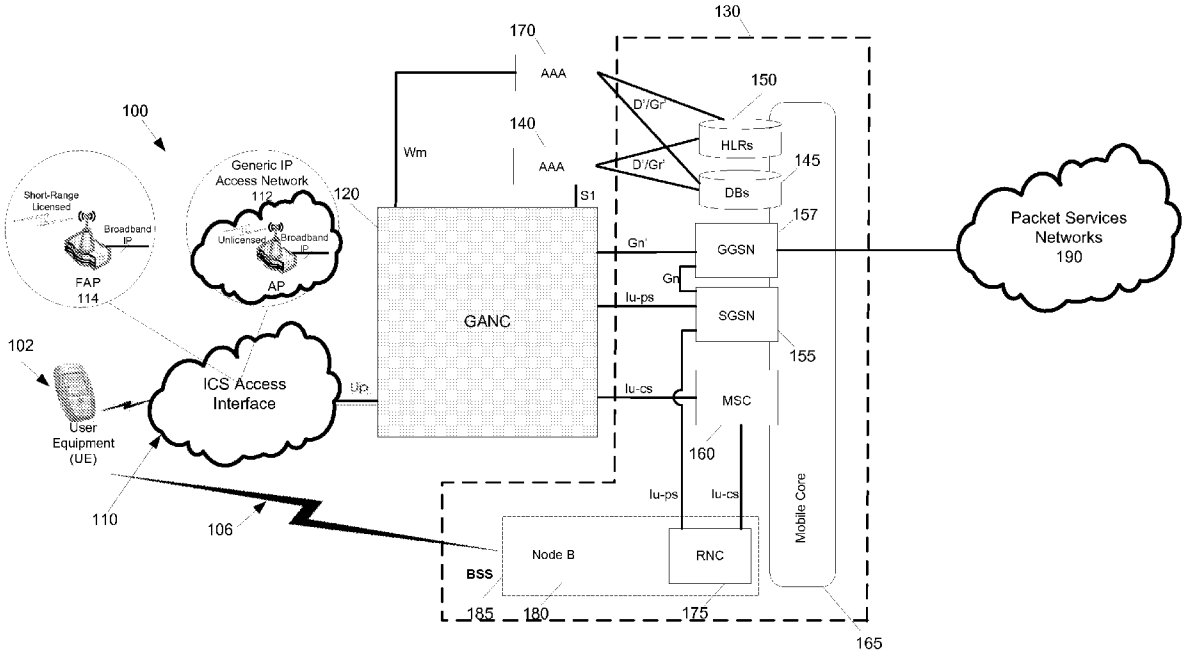
130
170
AAA
150
100
D'/Gr'
140
HLRs
Wm
AAA
D'/Gr'
145
Generic IP
Access Network
112
120
S1
DBs
157
Short-Range
Licensed
Broadband
IP
Unlicensed
Broadband
IP
Gn'
GGSN
Packet Services
Networks
190
FAP
114
AP
Gn
Iu-ps
GANC
SGSN
102
155
ICS Access
Interface
Up
Iu-cs
MSC
User
Equipment
(UE)
160
Iu-ps
Iu-cs
Mobile Core
110
106
Node B
RNC
BSS
185
180
175
165

Figure 1

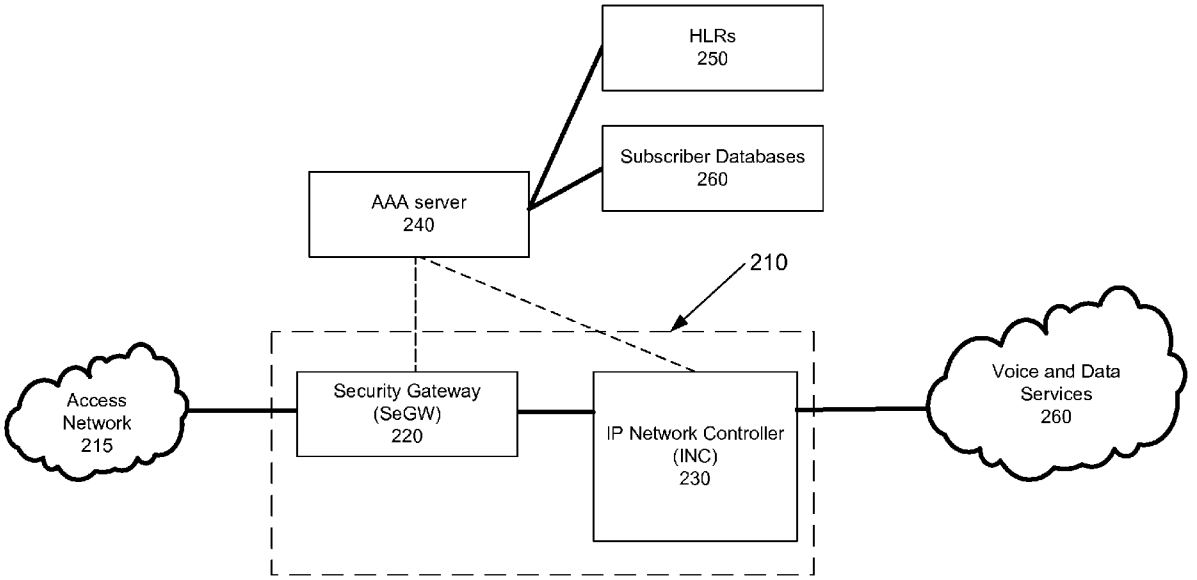
HLRs
250
Subscriber Databases
260
AAA server
240
210
Access
Network
215
Security Gateway
(SeGW)
220
IP Network Controller
(INC)
230
Voice and Data
Services
260

Figure 2

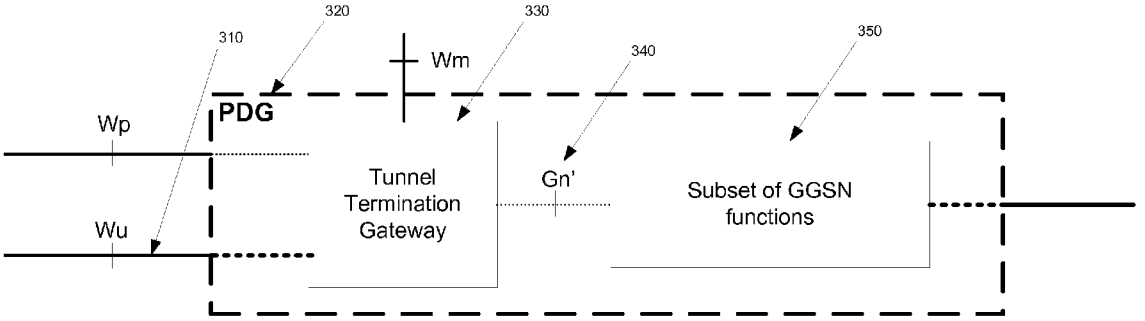

Prior Art
Figure 3

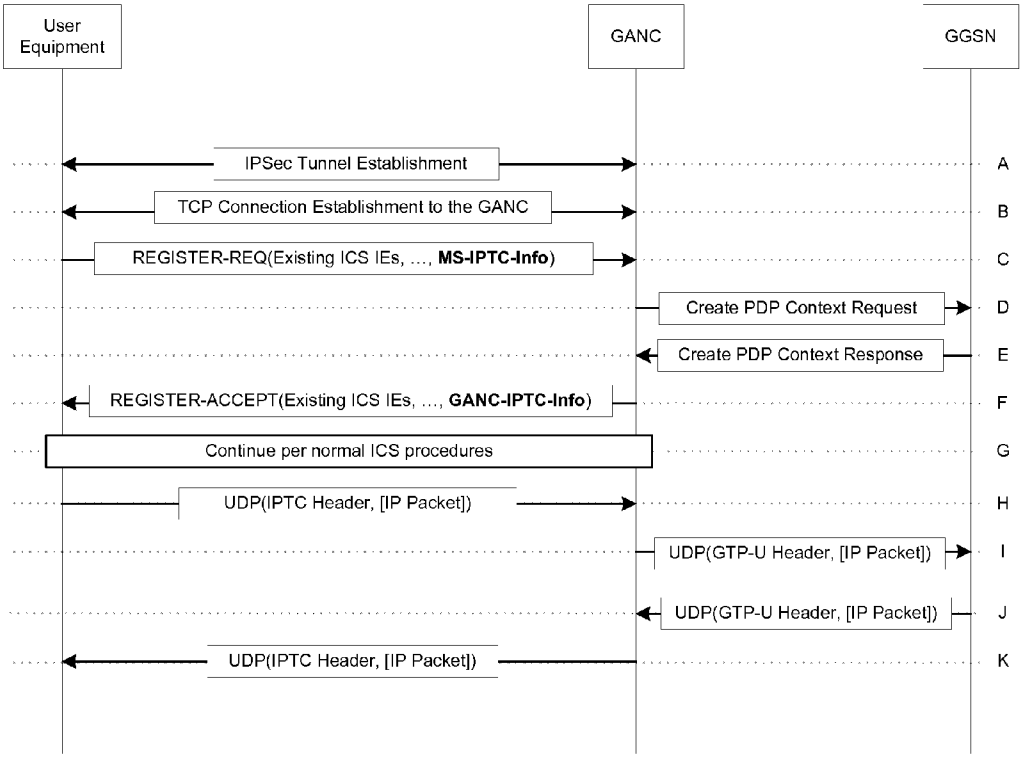
User Equipment
GANC
GGSN
IPSec Tunnel Establishment
A
TCP Connection Establishment to the GANC
B
REGISTER-REQ(Existing ICS IEs, ..., MS-IPTC-Info)
C
Create PDP Context Request
D
Create PDP Context Response
E
REGISTER-ACCEPT(Existing ICS IEs, ..., GANC-IPTC-Info)
F
Continue per normal ICS procedures
G
UDP(IPTC Header, [IP Packet])
H
UDP(GTP-U Header, [IP Packet])
I
UDP(GTP-U Header, [IP Packet])
J
UDP(IPTC Header, [IP Packet])
K

Figure 4

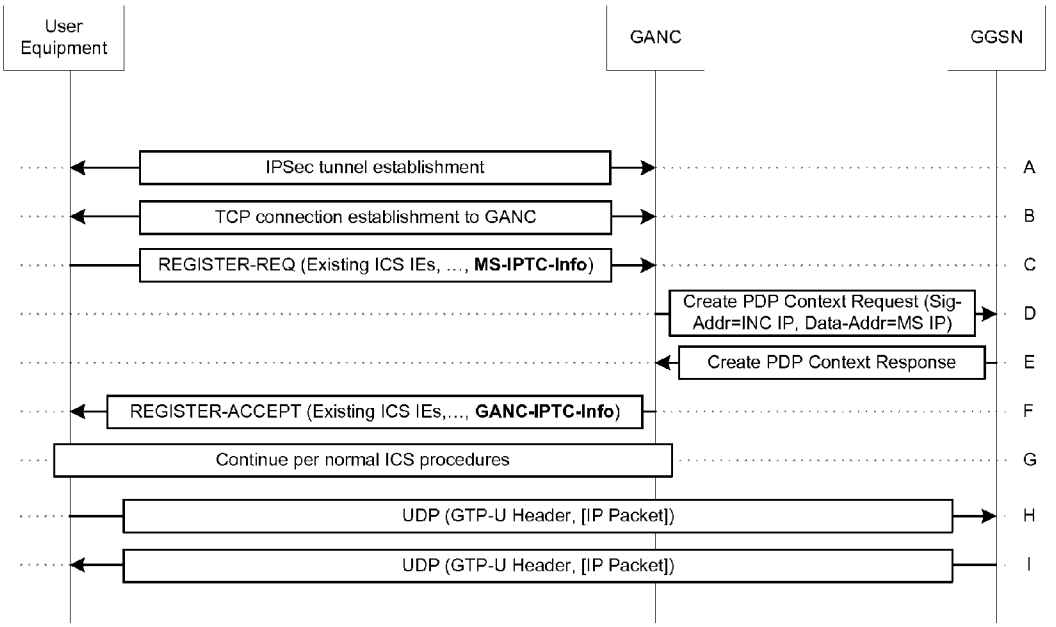
User Equipment
GANC
GGSN
IPSec tunnel establishment
A
TCP connection establishment to GANC
B
REGISTER-REQ (Existing ICS IEs, ..., MS-IPTC-Info)
C
Create PDP Context Request (Sig-Addr=INC IP, Data-Addr=MS IP)
D
Create PDP Context Response
E
REGISTER-ACCEPT (Existing ICS IEs,..., GANC-IPTC-Info)
F
Continue per normal ICS procedures
G
UDP (GTP-U Header, [IP Packet])
H
UDP (GTP-U Header, [IP Packet])
I

Figure 5

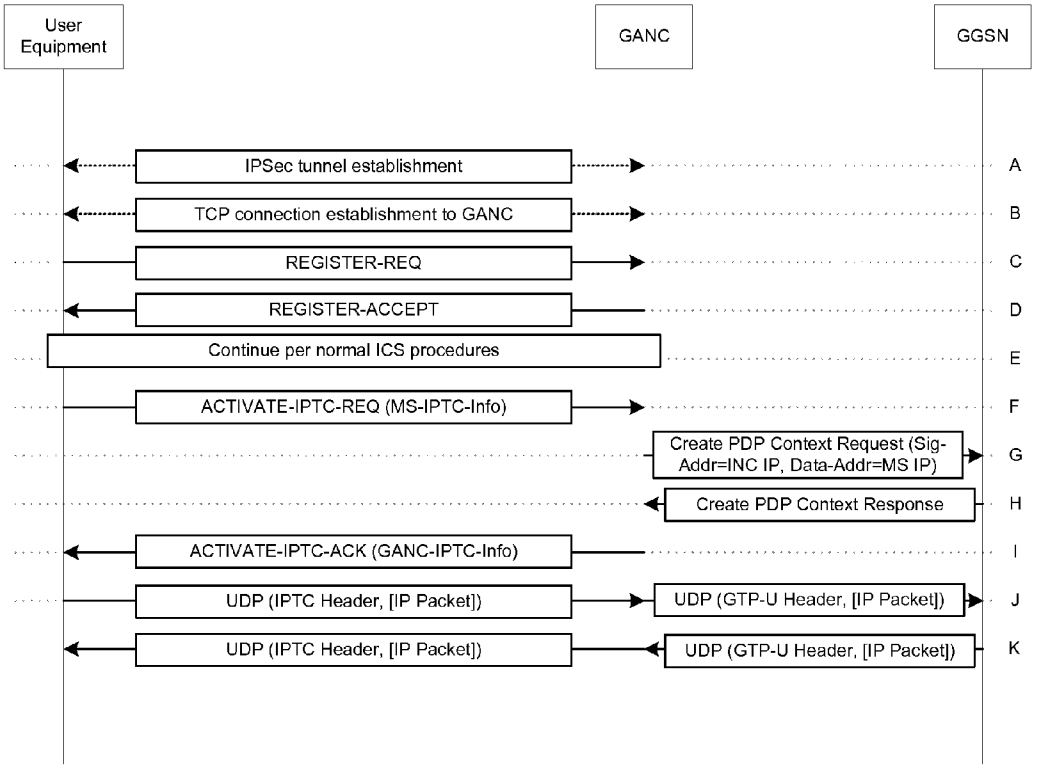
User Equipment
GANC
GGSN
IPSec tunnel establishment
A
TCP connection establishment to GANC
B
REGISTER-REQ
C
REGISTER-ACCEPT
D
Continue per normal ICS procedures
E
ACTIVATE-IPTC-REQ (MS-IPTC-Info)
F
Create PDP Context Request (Sig-Addr=INC IP, Data-Addr=MS IP)
G
Create PDP Context Response
H
ACTIVATE-IPTC-ACK (GANC-IPTC-Info)
I
UDP (IPTC Header, [IP Packet])
UDP (GTP-U Header, [IP Packet])
J
UDP (IPTC Header, [IP Packet])
UDP (GTP-U Header, [IP Packet])
K

Figure 6

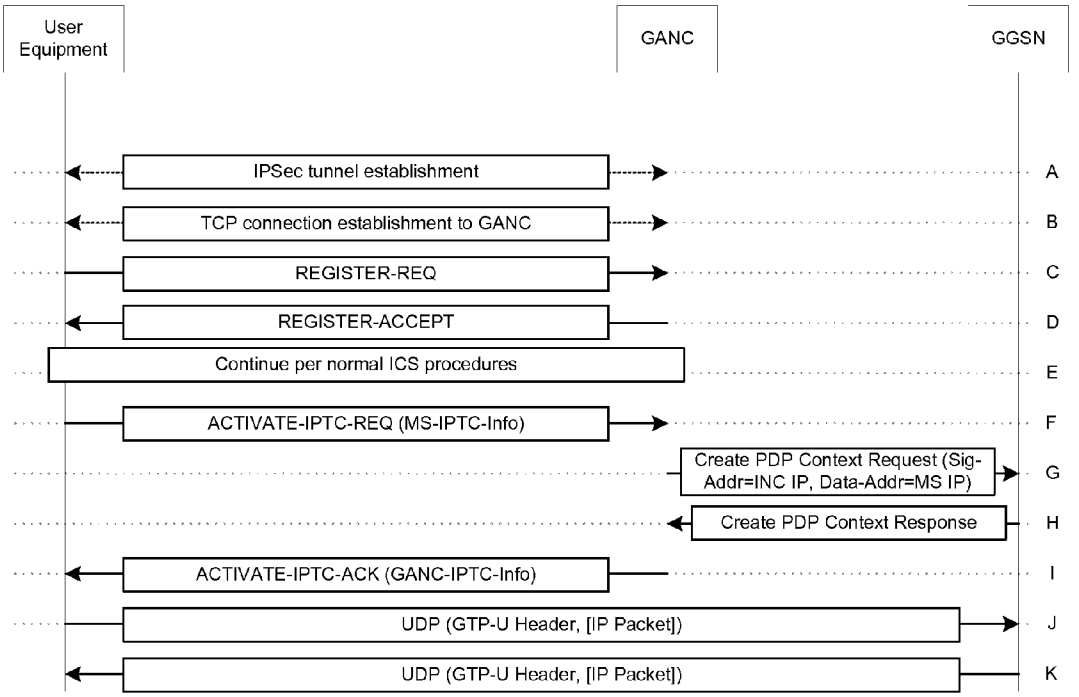
User Equipment
GANC
GGSN
IPSec tunnel establishment
A
TCP connection establishment to GANC
B
REGISTER-REQ
C
REGISTER-ACCEPT
D
Continue per normal ICS procedures
E
ACTIVATE-IPTC-REQ (MS-IPTC-Info)
F
Create PDP Context Request (Sig-Addr=INC IP, Data-Addr=MS IP)
G
Create PDP Context Response
H
ACTIVATE-IPTC-ACK (GANC-IPTC-Info)
I
UDP (GTP-U Header, [IP Packet])
J
UDP (GTP-U Header, [IP Packet])
K

Figure 7

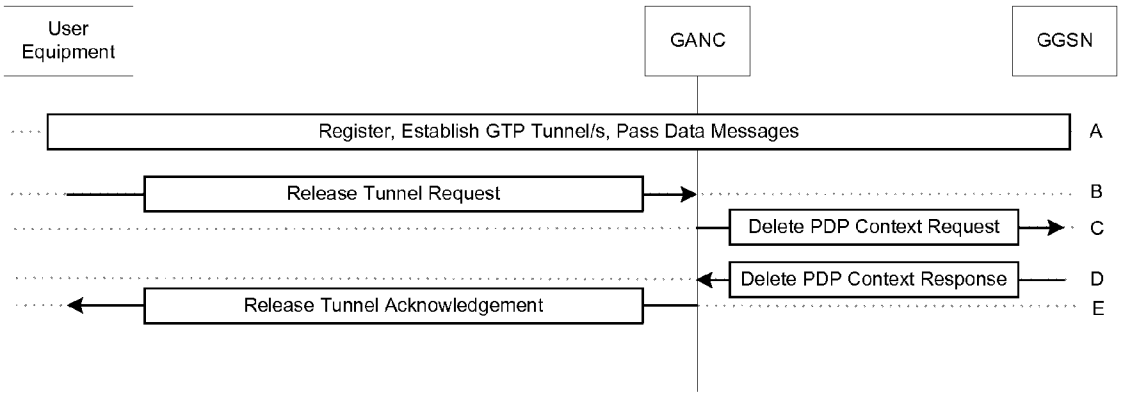
User Equipment
GANC
GGSN
Register, Establish GTP Tunnel/s, Pass Data Messages
A
Release Tunnel Request
B
Delete PDP Context Request
C
Delete PDP Context Response
D
Release Tunnel Acknowledgement
E

Figure 8

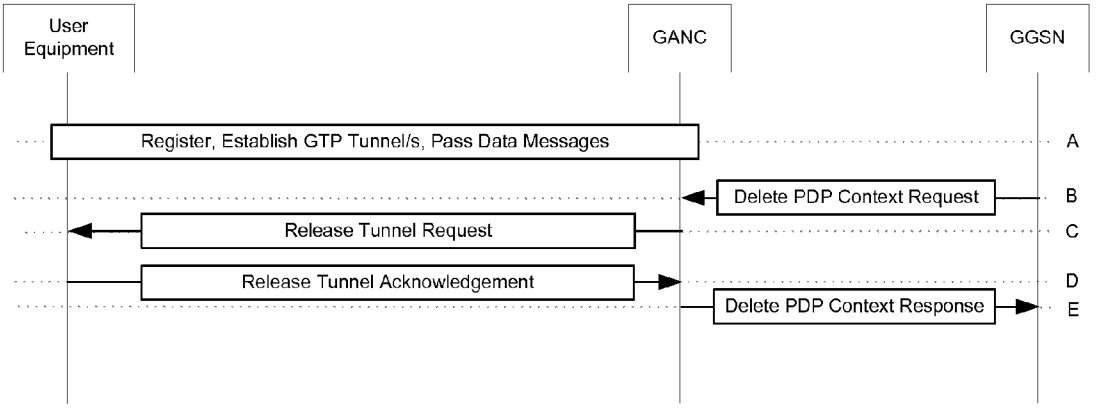
User Equipment
GANC
GGSN
Register, Establish GTP Tunnel/s, Pass Data Messages
A
Delete PDP Context Request
B
Release Tunnel Request
C
Release Tunnel Acknowledgement
D
Delete PDP Context Response
E

Figure 9

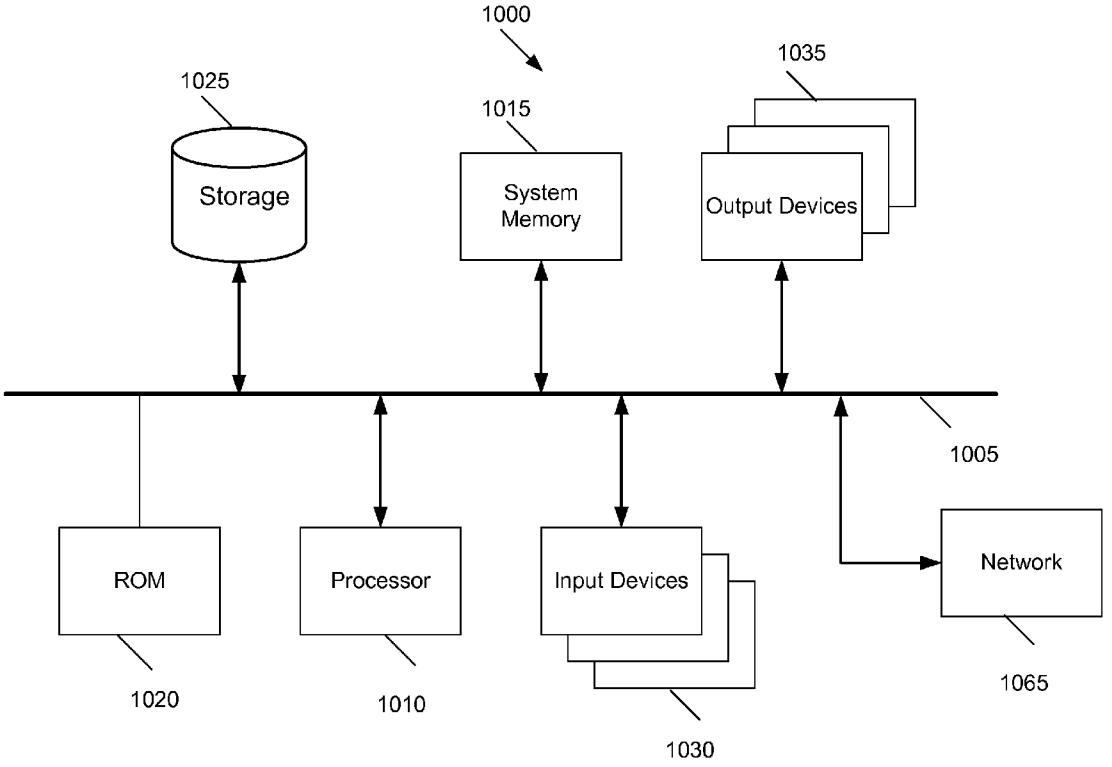
1000
1025
Storage
1015
System Memory
1035
Output Devices
1005
ROM
Processor
Input Devices
Network
1020
1010
1030
1065

Figure 10

METHOD OF PROVIDING IMPROVED INTEGRATED COMMUNICATION SYSTEM DATA SERVICE

CLAIM OF BENEFIT TO PRIOR APPLICATION

[0001] This application claims benefit to the U.S. Provisional Patent Application 60/793,196 filed Apr. 18, 2006. This United States Provisional Patent Application is incorporated herein by reference.

FIELD OF THE INVENTION

[0002] The present invention relates to telecommunications. More particularly, it relates to providing improved data services over an integrated communication system.

BACKGROUND OF THE INVENTION

[0003] Licensed wireless communication providers have gradually integrated data services into the list of services available to subscribers. The integration of data with voice services has opened a more expansive set of features and functionality not previously available. Features such as accessing the public Internet or text messaging through a cellular telephone are now commonplace.

[0004] As the licensed wireless networks continue to evolve, so too do the user equipment for accessing such services. However, integration of the new services has increased the demand on the licensed wireless network as larger blocks of data and more overall data are being routed through these networks. Such added loads place additional burdens on the provider equipment making access to such resources scarcer or slower. As a result, subscribers require greater bandwidth and more efficient utilization of the available bandwidth.

[0005] As one example, at the inception of the global system for mobile communications (GSM), only voice services were provided through the GSM core network. By using circuit switched data to provide a dedicated communication channel through to an endpoint, the voice services of GSM were poorly suited to adapt and provide data services using the existing set of core components.

[0006] As GSM evolved, general packet radio service (GPRS) functionality was added to the core components of the GSM network to provide data services through the GSM network with little change to the existing core voice network. In contrast to the circuit switching of voice communication, the GPRS elements introduced packet switching allowing for greater utilization of the available bandwidth resulting in greater user access. Through the packet switching of GPRS, a single data communication no longer had to reserve the full bandwidth of a circuit. Rather, the intermittent sending and receiving of data packets was facilitated over a shared communication medium through which data packets of several subscribers were routed.

[0007] However, fully utilizing the functionality and data services of the GPRS network required the licensed wireless service providers to integrate with other existing networks such as the public Internet (e.g., to provide mobile Internet access). This form of integration with other networks introduced even greater functionality and sets of services to the licensed wireless network as the data packets communicated over the GSM network had access to the Internet and other communication networks. Routing IP information from user equipment of the licensed wireless network to the public Internet and vice versa now became a viable option for licensed wireless providers.

[0008] To provide such data services, service providers implemented specific data service routing and processing components and new interfaces for passing data from and between such components. For example, in addition to the A-interface for voice communications over the GSM network, the Gb-interface was introduced to route data packets between the GSM core network and radio access network. Similarly, in the UMTS Terrestrial Radio Access Network (UTRAN), the lu-cs interface is used for voice communications and the lu-ps interface is used to route data packets between the UTRAN and the core network. As demand for data services on mobile devices continue to increase, faster networks and more efficient means to route the data are continually being added to the core network.

[0009] Moreover, as the integration between licensed wireless communication networks and data networks have converged, similarly other communication networks are being integrated with the licensed wireless networks to take advantage of the functionality provided by the licensed wireless networks. One such technology is an integrated communication system (ICS) for coupling the user equipment of a licensed wireless communication network to an access point of a second different communication network for seamlessly communicating and passing packet data from the user equipment through the second communication network. An example of such an integrated communication system is the universal mobile access (UMA, also known as "unlicensed mobile access" and "generic access") architecture.

[0010] An effective implementation of such an integrated communication system is to leverage the existing packet data switching infrastructure of the licensed wireless network in order to provide data services equivalent to or better than those of the licensed wireless network. In this manner, a need arises to scale the data services and infrastructure of the licensed wireless communication networks to adapt to and integrate with the other communication networks.

[0011] A simple implementation of the ICS includes encapsulating information compatible from one network into a wrapper compatible with the licensed wireless network and further encapsulating the information into a wrapper of the data network (e.g., IP network). However, such encapsulation, encoding, and decoding introduces latencies and additional overhead that is undesirable in a real world application where subscribers continually demand for more information and faster retrieval of such information. Therefore, a need arises to provide improved and efficient data services over a voice and data communication network integrated with the licensed communication network. Such a system should utilize the resources already available within the licensed wireless network while reducing the overhead and complexity associated with providing such services.

SUMMARY OF THE INVENTION

[0012] Some embodiments provide a method and apparatus for seamlessly providing voice and data services across a licensed wireless network while accessing a second dif-

ferent communication network through a user equipment. The first and second communication networks include licensed wireless networks, unlicensed wireless networks, or Internet Protocol (IP) networks, to name a few. Furthermore, some embodiments of the second communication network include a modified interface for directly interfacing with components of the first communication network in order to pass and retrieve data packets from the user equipment.

BRIEF DESCRIPTION OF THE DRAWINGS

[0013] FIG. **1** provides an overview of the integrated communication system (ICS) network in accordance with some embodiments of the present invention.

[0014] FIG. **2** provides an example of a Generic Access Network Controller (GANC) in accordance with some embodiments of the invention.

[0015] FIG. **3** provides an illustrative embodiment for direct tunneling over a Interworking Wireless Local Area Network.

[0016] FIG. **4** is a message and data flow diagram illustrating messages and operations employed to facilitate establishing a single Packet Data Protocol (PDP) context with a GANC acting as a GPRS tunneling protocol (GTP)-User endpoint in accordance with some embodiments of the invention.

[0017] FIG. **5** is a message and data flow diagram illustrating messages and operations employed to facilitate establishing a single PDP context with a user equipment (UE) acting as a GTP-U endpoint in accordance with some embodiments of the invention.

[0018] FIG. **6** is a message and data flow diagram illustrating messages and operations employed to facilitate establishing multiple PDP contexts through an IP Security (IPSec) tunnel with the GANC in which the GANC acts as a GTP-U endpoint in accordance with some embodiments of the invention.

[0019] FIG. **7** is a message and data flow diagram illustrating messages and operations employed to facilitate establishing multiple PDP contexts through a single IPSec tunnel with the GANC in which the UE acts as a GTP-U endpoint in accordance with some embodiments of the invention.

[0020] FIG. **8** is a message and data flow diagram illustrating messages and operations employed to facilitate releasing an established GTP tunnel where the release message is initiated by the UE in accordance with some embodiments of the invention.

[0021] FIG. **9** is a message and data flow diagram illustrating messages and operations employed to facilitate releasing an established GTP tunnel where the release message is initiated by the network in accordance with some embodiments of the invention.

[0022] FIG. **10** conceptually illustrates a computer system with which some embodiments are implemented.

DETAILED DESCRIPTION OF THE INVENTION

[0023] In the following description, numerous details are set forth for the purpose of explanation. However, one of ordinary skill in the art will realize that the invention may be practiced without the use of these specific details. In other instances, well-known structures and devices are shown in block diagram form in order not to obscure the description of the invention with unnecessary detail. Moreover, throughout the following description, acronyms commonly used in the telecommunications industry for wireless services are utilized along with acronyms specific to the present invention. A table of acronyms specific to this application is included in Appendix I. A listing of cited references is included in Appendix II.

I. Overview

[0024] Some embodiments provide a method and apparatus for seamlessly providing voice and data services across a licensed wireless network while accessing a second different communication network through a user equipment. The first and second communication networks include licensed wireless networks, unlicensed wireless networks, or Internet Protocol (IP) networks, to name a few. Furthermore, some embodiments of the second communication network include a modified interface for directly interfacing with components of the first communication network in order to pass and retrieve data packets from the user equipment.

[0025] In some embodiments, the user equipment (UE) includes various communication devices that operate in either an unlicensed wireless network or licensed wireless network. However, when the user equipment is within range of an integrated communication system (ICS), the user equipment may establish voice and/or data services over a different communication network. For example, the ICS of some embodiments seamlessly integrates and establishes voice and/or data services of a licensed wireless device through an unlicensed communication network. In some embodiments, the user equipment includes a cellular telephone, smart phone, personal digital assistant, dual-mode handset, WiFi handset, or computer equipped with a subscriber identity mobile (SIM) card for communicating over the licensed or unlicensed wireless networks. Moreover, in some embodiments the computer equipped with the SIM card communicates through a wired communication network.

[0026] Alternatively, in some embodiments the user equipment includes a fixed wireless device providing a set of terminal adapter functions for connecting Integrated Services Digital Network (ISDN), Session Initiation Protocol (SIP), or Plain Old Telephone Service (POTS) terminals to the ICS. Application of the present invention to this type of device enables the wireless service provider to offer the so-called landline replacement service to users, even for user locations not sufficiently covered by the licensed wireless network. Moreover, some embodiments of the terminal adapters are fixed wired devices for connecting ISDN, SIP, or POTS terminals to a different communication network (e.g., IP network) though alternate embodiments of the terminal adapters provide wireless equivalent functionality for connecting through unlicensed or licensed wireless networks.

[0027] In some embodiments, the unlicensed wireless network is a short-range unlicensed wireless network facilitated by a radio link employing a wavelength (or wavelength range) in a free spectrum (e.g., spectrum around 2.4 GHz, 5 GHz, 11-66 GHz). An unlicensed wireless service hosting an unlicensed wireless channel may have an associated com-

munication protocol. As an example, the unlicensed wireless service may be a wireless local area network (LAN) (WiFi) service (e.g., the IEEE 802.11a, b, n, or g wireless standard).

[0028] In some embodiments, the licensed wireless network is a GSM or GPRS type wireless network serviced by wireless providers. However, one of ordinary skill in the art will recognize that the invention can be embodied through any user equipment or other communication network compatible with the ICS without departing from the spirit of the invention. For example, the licensed wireless network can include a UMTS Terrestrial Radio Access Network (UTRAN) or GSM EDGE Radio Access Network (GERAN).

[0029] In some embodiments, an ICS access interface provides the seamless interface for establishing voice and data services for a user equipment of a first communication network across a second different network. In some embodiments, the ICS access interface includes an unlicensed wireless network through which voice and data services established over the unlicensed wireless network are routed through an IP broadband network. In some embodiments, the ICS access interface includes an access point (AP) for creating the unlicensed wireless network through which voice and data services established over the unlicensed wireless network are routed through to the IP broadband network.

[0030] Alternatively, in some embodiments, the ICS access interface creates a short-range licensed wireless network that operates independent from any licensed wireless network of a service provider. The ICS access interface then routes voice and data services established over the short-range licensed wireless network through an IP broadband network. In some embodiments, the ICS access interface includes a femtocell access point (FAP) for creating the short-range licensed wireless network through which voice and data services established over the short-range licensed wireless network are routed through to the broadband IP network. In this manner, a user equipment of a licensed wireless network (e.g. GSM or UMTS cellular telephone), when in range of the ICS access interface or the FAP, may bypass the wide area licensed wireless network of the licensed service provider and instead establish the voice and/or data services transparently through the short-range licensed wireless network of the ICS access interface. The ICS access interface then transparently routes the voice and/or data services over the broadband IP network instead of the licensed wireless network of the service provider. As a result, the user equipment can communicate over two different communication networks without requiring any changes.

[0031] Such added functionality provides the user with potentially improved quality of service in the service regions of the ICS access interface (e.g., within the service range of a corresponding AP/FAP). Thus, when a subscriber is within range of the ICS access interface, the subscriber enjoys low cost, high speed, and high quality voice and data services. In addition, the subscriber enjoys extended service range since the handset can receive services deep within a building at locations that otherwise may not be reliably serviced by a wide area licensed wireless network service provider. At the same time, the subscriber can roam outside the range of the ICS access interface without dropping communications. Instead, roaming outside the range of the ICS access interface results in a seamless handoff (also referred to as a handover) where communication and data services are automatically provided by the wide area licensed wireless network of the service provider, as described in the U.S. Pat. No. 6,922,559.

II. Architecture

[0032] FIG. **1** illustrates an integrated communication system (ICS) architecture **100** in accordance with some embodiments of the present invention. ICS architecture **100** enables user equipment (UE) **102** to access a voice and data network **165** via either a licensed wireless communications session **106** or an ICS access interface **110** through which components of the licensed wireless core network **165** are alternatively accessed. In some embodiments, the communication session includes voice services, data services, or both.

[0033] The licensed wireless core network **165** includes one or more Home Location Registers (HLRs) **150** and databases **145** for subscriber authentication and authorization. Once authorized, the UE **102** may access the voice and data services of the licensed core network **165**. In order to provide such services, the licensed core network **165** includes a mobile switching center (MSC) **160** for providing access to the voice services. Data services are provided for through a Serving GPRS (General Packet Radio Service) Support Node (SGSN) **155** in conjunction with a gateway such as the Gateway GPRS Support Node (GGSN) **157**.

[0034] The SGSN **155** is typically responsible for delivering data packets from and to the GGSN **157** and the user equipment within the geographical service area of the SGSN **155**. Additionally, the SGSN **155** may perform functionality such as mobility management, storing user profiles, and storing location information. However, the actual interface from the licensed core network **165** to various external data packet services networks **190** (e.g., public Internet) is facilitated by the GGSN **157**. As the data packets originating from the user equipment typically are not structured in the format with which to access the external data networks, it is the role of the GGSN **157** to act as the gateway into such packet services networks. In this manner, the GGSN **157** provides addressing for data packets passing to and from the UE **102** and the external packet services networks **190**. Moreover, as the user equipment of a licensed wireless network traverses multiple service regions and thus multiple SGSNs, it is the role of the GGSN **157** to provide a static gateway into the external data networks **190**.

[0035] In some embodiments, the packet services networks **190** include the public Internet from which data packets originating from the UE **102** access various data servers such as email and web servers. However, it will be apparent to one of ordinary skill in the art that other packet services networks and data providing servers are similarly accessible through the gateway created by the GGSN **157** of the licensed core network **165**.

[0036] In the illustrated embodiment, the licensed wireless network depicts components common to a UMTS Terrestrial Radio Access Network (UTRAN), based cellular network that includes multiple base stations referred to as Node Bs **180** (of which only one is shown for simplicity) that facilitate wireless communication services for various user equip-

ment **102** via respective licensed radio links **106** (e.g., radio links employing radio frequencies within a licensed bandwidth). However, one of ordinary skill in the art will recognize that in some embodiments, the licensed wireless network may include other licensed wireless networks such as GSM/GPRS and GERAN to name a few.

[**0037**] The licensed wireless channel **106** may comprise any licensed wireless service having a defined Base Station Subsystem (BSS) interface protocol (e.g., lu-cs and lu-ps interfaces) for a voice/data network. The BSS **185** typically includes at least one Node B **180** and a Radio Network Controller (RNC) **175** for managing the set of Node Bs **180**. Typically, the multiple Node Bs **180** are configured in a cellular configuration (one per each cell) that covers a wide service area.

[**0038**] Each RNC **175** communicates with components of the core network **165** through a standard radio network controller interface such as the lu-cs and lu-ps interfaces depicted in FIG. **1**. For example, a RNC **175** communicates with MSC **160** via the UTRAN lu-cs interface for circuit switched voice services. Additionally, the RNC **175** communicates with SGSN **155** via the UTRAN lu-ps interface for packet data services through GGSN **157**. Moreover, one of ordinary skill in the art will recognize that in some embodiments, other networks with other standard interfaces may apply. For example, the RNC **175** in a GSM/GPRS network is replaced with a Base Station Controller (BSC) that communicates voice to the MSC **160** via an A interface and the BSC communicates data to the SGSN via a Gb interface of the GSM/GPRS network.

[**0039**] In some embodiments of the ICS architecture, the user equipment **102** is connected to the licensed wireless core network **165** via a second communication network facilitated by the ICS access interface **110** and a Generic Access Network Controller (GANC) **120** (also referred to as a Universal Network Controller (UNC)). In some embodiments, the voice and data services over the ICS access interface **110** are facilitated via a generic IP access network **112**. Moreover, in some embodiments the generic IP access network **112** includes an Access Point (AP). Alternatively, in some embodiments the voice and data services over the ICS access interface are facilitated via a femtocell access point (FAP) **114** communicatively coupled to a broadband IP network. In accordance with some embodiments, the AP or FAP **114** will be located in a fixed structure, such as a home or an office building. In some embodiments, the service area of the AP or FAP includes an indoor portion of a building, although it will be understood that the service area may include an outdoor portion of a building or campus.

[**0040**] In some embodiments, the UE **102** connects to the generic IP access network through an accessible unlicensed wireless network. Signals from the unlicensed wireless network are then transmitted over the generic IP access network. The unlicensed wireless network of some embodiments includes radio links employing a wavelength (or wavelength range) in an unlicensed, free spectrum (e.g., spectrum around 2.4 GHz, 5 GHz, 11-66 GHz). An unlicensed wireless service hosting the unlicensed wireless network may have an associated communication protocol. As an example, the unlicensed wireless service may be a wireless local area network (LAN) (WiFi) service (e.g., the IEEE 802.11a, b, n, or g wireless standard).

[**0041**] The signaling from the UE **102** is passed over the ICS access interface **110** to the GANC **120**. After the GANC **120** performs authentication and authorization of the subscriber, the GANC **120** communicates with components of the core licensed wireless network **165** using a radio network controller interface that is similar to radio network controller interface of the UTRAN described above, and includes a UTRAN lu-cs interface for circuit switched voice services and a UTRAN lu-ps interface for packet data services (e.g., GPRS). In this manner, the GANC **120** appears to the UTRAN core network as a UTRAN BSS network element (e.g., the Node B **180** and RNC **175**) and is managed and operated as such.

[**0042**] Additionally, the GANC **120** communicates with other system components of the ICS system through several other interfaces, which are (1) "Up", (2) "Wm", (3) "D'/Gr'", (4) "Gn'", and (5) "S1". The "Up" interface is the standard interface for session management between the UE **102** and the GANC **120**. The "Wm" interface is a standardized interface between the GANC **120** and an Authorization, Authentication, and Accounting (AAA) Server **170** for authentication and authorization of the UE **102** into the ICS. The "D'/Gr'" interface is the standard interface to the HLR **160** and the "Gn'" interface is a modified interface for direct communications with the data services gateway (e.g., GGSN) of the core licensed network. Some embodiments optionally include the "S1" interface. In these embodiments, the "S1" interface provides an authorization and authentication interface from the GANC **120** to an AAA **140** server. In some embodiments, the AAA server **140** that supports the S1 interface and the AAA server **170** that supports Wm interface may be the same.

[**0043**] In some embodiments, the UE **102** must register with the GANC **120** prior to accessing ICS services. Registration information of some embodiments includes a subscriber's International Mobile Subscriber Identity (IMSI), a Media Access Control (MAC) address, and a Service Set Identifier (SSID) of the serving access point as well as the cell identity from the GSM or UTRAN cell upon which the UE **102** is already camped. The GANC **120** then passes this information to the AAA server **140** to authenticate the subscriber and determine the services (e.g., voice and data) available to the subscriber. If approved by the AAA **140** for access, the GANC **120** will permit the UE **102** to access voice and data services of the ICS system.

[**0044**] These voice and data services are seamlessly provided by the ICS to the UE **102** through the various interfaces described above. For example, when a UTRAN core network is integrated with the ICS, voice services are provided through the GANC **120** over the standard lu-cs interface. When data services are requested by the UE **102**, the ICS uses the Gn' interface for directly communicating with a GGSN **157**. The Gn' interface allows the GANC **120** to avoid the overhead and latency associated with communicating with the SGSN **155** over the lu-ps interface of the UTRAN or the Gb interface of the GSM core networks prior to reaching the GGSN **157**. Moreover, it should be apparent to one of ordinary skill in the art that the GANC **120** may directly communicate over a similar Gn' interface with the gateways of other communication networks, such as GERAN.

[**0045**] Fewer components along the data services path also results in fewer layers of encapsulation being added and

removed to the data packets. For instance, in the GSM and GERAN core networks, communication with the SGSN would require the addition of the Logical Link Control (LLC) protocol or the Sub Network Dependence Convergence Protocol (SNDCP) encapsulation layers. However, in bypassing the SGSN and directly communicating with the GGSN, these layers become unnecessary.

[0046] FIG. **2** presents an illustrative example of a GANC **210** in accordance with some embodiments of the invention. The GANC **210** includes a Security Gateway (SeGW) **220** and an IP Network Controller (INC) **230**. The SeGW component **220** of the GANC **210** provides a secure entrance for a user equipment (e.g., via an IP Security (IPSec) tunnel) to the voice and data services of the telecommunication network **260**. The SeGW **220** terminates the secure tunnel and works with one or more authorization, authentication, and accounting (AAA) servers **240** to authenticate the ICS subscriber. The AAA servers **240** communicate with one or more HLRs **250** and subscriber databases **260** that store information pertaining to the ICS subscriber.

[0047] Once authenticated, the AAA **240** notifies the INC **230** through a separate communication exchange. Moreover, the INC **230** may receive or pass communications directly to and from the SeGW **220** through additional communication exchanges. The INC **230** then proceeds to manage the subscriber's access to all voice and data services **260** using one of the various interfaces described above with regards to the UTRAN, GSM, and GERAN networks. For instance, in communicating with a user equipment, the GANC **210** in some embodiments terminates the Generic Access Packet Switched Resources (GA-PSR) protocol used in passing signaling between the user equipment and the GANC **210**. The GANC **210** then inter-works the GA-PSR messages through an lu-ps interface into the licensed wireless core network using the Radio Access Network Application Part (RANAP) protocol. However, one of ordinary skill in the art will realize that the GANC **210** can be implemented using various other communication interfaces. Moreover, in some embodiments, the GANC **210** includes only some of the components described with regards to FIG. **2** or may additionally include various other components. For example, the SeGW **220** can be separated from the rest of the GANC **210** while the AAA server **240** can be made part of the GANC **210**.

[0048] Some embodiments of the above mentioned devices, such as the user equipment **102**, FAP **114**, or GANC **120**, include electronic components, such as microprocessors and memory (not shown), that store computer program instructions for executing wireless protocols for managing voice and data services in a machine-readable or computer-readable medium as further described below in the section labeled "Computer System". Examples of machine-readable media or computer-readable media include, but are not limited to magnetic media such as hard disks, memory modules, magnetic tape, optical media such as CD-ROMS and holographic devices, magneto-optical media such as optical disks, and hardware devices that are specially configured to store and execute program code, such as application specific integrated circuits (ASICs), programmable logic devices (PLDs), ROM, and RAM devices. Examples of computer programs or computer code include machine code, such as produced by a compiler, and files containing higher-level code that are executed by a computer, an electronic component, or a microprocessor using an interpreter.

[0049] Moreover, some embodiments of the user equipment **102**, FAP **114**, or GANC **120** provide an interface conversion function to convert the signaling of the unlicensed service or short-range licensed service into a conventional base station subnetwork (BSS) interface (e.g., an lu-cs interface and an lu-ps interface or an A interface and a Gb interface). Alternatively, some embodiments of the user equipment **102**, FAP **114**, and GANC **120** provide an interface conversion function to convert the signaling of the unlicensed service or licensed service into other network interfaces compatible with the GANC **120** and the ICS architecture, such as an IP/Ethernet interface.

[0050] As a result of the protocol conversion, voice and data services are established transparently to the voice and data network **130** (e.g., the voice and data network **130** use their standard interfaces and protocols for the voice and data services as they would with a conventional communication session handled by a conventional licensed Node B). Accordingly, protocols for a seamless handoff of services that are transparent to the voice and data network **130** are facilitated. This permits, for example, a single phone number to be used for both the licensed wireless service and the unlicensed wireless service.

[0051] Additionally, the present invention permits a variety of services that were traditionally offered only through licensed wireless services to be offered through an unlicensed wireless network, short-range wireless network, broadband connection, or other integrated network of the ICS. The user thus gets the benefit of potentially higher quality voice and data services when their user equipment is located within the area serviced by the unlicensed wireless network, short-range licensed wireless network, or broadband connection.

[0052] The data services typically include the following services: Text Messaging, Picture Messaging, Instant Messaging, Mobile Internet Access, Streaming Audio, Streaming Video, Email access, incoming Short Message Service (SMS) news feeds, downloading applications, downloading ringtones, to name a few. However, it should be apparent to one of ordinary skill in the art that various implementations of the ICS architecture include other known data services or alternatives to the described services.

III. Facilitation of Data Services over ICS

[0053] As described with reference to FIG. **1**, some embodiments of an ICS system seamlessly integrate communication networks of two different communication networks so that a user equipment of a first communication network receives seamless and equivalent voice and data services whether connected through a second communication network or the first communication network. In order to provide this seamless communication, some embodiments of the ICS system leverage the existing infrastructure of the first network so that the functionality and the components of the first network providing the functionality do not have to be re-implemented. Moreover, by using protocols and interfaces common to the user equipment and the integrated first network, the ICS implementation will allow the user equipment of the first communication network to remain unaltered

while still being able to receive the benefits of communicating over the second communication network.

[0054] In this manner, the burden of translation and conversion between signaling of the user equipment of the first communication network to the signaling of the second communication network and back to the infrastructure of the first communication network is seamlessly handled by components of the ICS. Specifically, the GANC of some embodiments provides the validation, routing, and conversion functionality necessary to allow the user equipment of the first communication network to establish voice and data services when connected through the second communication network.

[0055] Providing voice and data services over the ICS network is described in U.S. Pat. No. 7,127,250. In some such embodiments, the second communication network interfaces with a licensed wireless communication network at the stage of the BSS **185** shown in FIG. **1**. In an ICS with an integrated UTRAN network, voice services are routed from the GANC over the lu-cs interface to the MSC before reaching a voice network. Data services are routed from the GANC over the lu-ps interface to the SGSN which then routes the data packets over the Gn interface to an appropriate data services GGSN before reaching the data network.

[0056] In this manner, several protocols and layers of encapsulation are needed to route data originating from the user equipment through to the GANC, SGSN, GGSN, and ultimately the data network. For instance, in a GERAN network, the Gb interface may be a frame relay interface while the Gn interface is entirely based on the IP protocol. Communications between the user equipment and the SGSN use the LLC protocol to provide data-link services as specified within the Open System Interconnection (OSI) seven-layer model and the SNDCP to map network level protocols to the underlying logical link control. To transport the LLC data units over the Gb interface, the GERAN typically utilizes the Base Station Subsystem GPRS Protocol (BSSGP). Included within the BSSGP messaging are the LLC data units, an identity of the user equipment, and typically a corresponding set of Quality of Service (QoS) parameters.

[0057] Such BSSGP messages are then routed from the SGSN to the GGSN by way of the GPRS Tunneling Protocol (GTP). GTP provides an unreliable data transport function through its use of the User Datagram Protocol (UDP). GTP transmits the IP datagrams originating from the user equipment through to the GGSN. Additionally, this series of data exchanges is preceded by a series of registration and activation messages first between the user equipment and the SGSN and subsequently by a series of registration and activation messages between the SGSN and the GGSN.

[0058] A. Improved Data Service Over ICS

[0059] Some embodiments of the ICS provide improved data services by directly accessing components deeper within the infrastructure of the licensed wireless communication network. In this manner, non-essential components for providing data services such as the SGSN are bypassed and instead a direct link to the GGSN is established from the GANC. The additional processing, latency, and complexity associated with such non-essential data service components are eliminated. Moreover, the additional overhead associated with data conversion for interfacing with the unnecessary components is reduced. Therefore, packets intended for the GGSN are directly encapsulated for processing by the GGSN as opposed to encapsulating and decapsulating the packets for traveling across the various interfaces that are otherwise present in the licensed network.

[0060] Some embodiments perform this direct encapsulation by linking the IP datagrams sent from the user equipment directly to the Gn or IP based interface of the data service providing GGSN of the licensed wireless network. As illustrated in FIG. **1**, an ICS of some embodiments integrates an unlicensed wireless, short-range licensed wireless, or broadband IP network (not depicted; e.g., for a softmobile) to a licensed wireless network. The signals from the unlicensed, short-range licensed, or broadband network are all communicated through an ICS access interface. In some embodiments, the ICS access interface includes an IP network which uses the same IP protocol for communicating with a GGSN. In this manner, direct tunneling to the GGSN provides lower latency and faster data services.

[0061] One method for direct tunneling over an interworked wireless local access network (I-WLAN) to a GGSN is described within the 3rd Generation Partnership Project document titled "3GPP System to Wireless Local Area Network (WLAN) interworking". As described therein, a subset of the Gn interface referred to as the Gn' interface is defined for re-using existing GGSN components of a licensed wireless core network to implement data service functionality using a direct tunnel with user equipment communicating over a WLAN. Therefore, functionality such as charging gateway interfaces, IP address allocation, authentication in external networks, and single access to services provided by a Public Land Mobile Network (PLMN) using IP bearer capability between a user equipment of a WLAN and the PLMN are provided without requiring changes to the GGSNs of the core network. In some embodiments, a minimal implementation of the Gn' interface would include the following messages of the Gn interface: Create Packet Data Protocol (PDP) Context Request/Response, Update PDP Context Request/Response, Delete PDP Context Request/Response, error indication, version not supported, and GTP payload forwarding.

[0062] An illustrative implementation for direct tunneling over an I-WLAN is presented in FIG. **3**. In this figure, a Packet Data Gateway (PDG) **320** includes various interfaces for communicating with different components of the I-WLAN. A Wireless Local Access Network (WLAN) user equipment (UE) interfaces with the Tunnel Terminating Gateway (TTG) **330** of the PDG **320** over one such interface after receiving authorization to access the WLAN. Once authorized, the WLAN UE interfaces with the TTG **330** over a Wu interface **310**. The Wu interface **310** represents a WLAN UE initiated tunnel for passing data between the WLAN UE and the PDG **320**. The WLAN UE sends a request to establish a tunnel to the TTG **330**. When the TTG **330** receives the tunnel request from the WLAN UE, the TTG **330** performs a second authorization of the WLAN UE to determine whether the WLAN UE is authorized to access the data services of the network. The TTG **330** attempts to authorize and authenticate the WLAN UE with an AAA server (not shown). If approved, the TTG **330** will receive various identification information of the WLAN UE and based on the information terminates the end-to-end tunnel

setup between the WLAN UE and the PDG **320**. The TTG **330** then proceeds to establish a GTP tunnel with the GGSN functional part **350** of the PDG **320** over the Gn subset interface or Gn' interface **340**. In this manner, each end-to-end tunnel established by the WLAN UE is mapped on a one-to-one basis with a GTP tunnel established by the TTG **330**.

[**0063**] While the I-WLAN direct tunneling method bypasses the SGSN of the core network, the I-WLAN direct tunneling method nevertheless added the TTG into the core network and the additional overhead associated with the TTG authorizing the UE for data services. In order to further improve data services and the speed and quality associated with such data services, some embodiments of the ICS, integrate a complete set of functionality needed to communicate with the GGSN into the pre-existing GANC.

[**0064**] Moreover, in some embodiments of the ICS, the user equipment is no longer confined to a one-to-one mapping between an end-to-end tunnel and a GTP tunnel. Rather, the GANC manages several GTP tunnels for a single end-to-end tunnel established between the UE and the GANC. Additionally, some embodiments provide true end-to-end communication between the user equipment and the GGSN as will be described below. As a result, fewer resources and less complexity are needed to provide equivalent data services functionality in the ICS to that of the I-WLAN and licensed wireless networks.

[**0065**] B. ICS Implementation for Direct Tunneling

[**0066**] Referring back to FIG. **1**, some embodiments of the invention directly link the GANC using the Gn' interface to the GGSN. When the UE registers with the GANC, the GANC accesses an AAA server to perform authorization. If approved, the GANC at this time retrieves service information associated with the UE. In some embodiments, the service information includes the services available to the subscriber (e.g., data services such as text messaging), and location information associated with the UE. However, it should be apparent to one of ordinary skill in that art, that the AAA server may pass additional information for the subscriber to the GANC.

[**0067**] Moreover, the registration in some embodiments may include additional signaling to enable the creation of a transport channel for the passage of GPRS data packets from the UE to the GANC. In some embodiments, the transport channel carries IP packets containing user data. Use of such "IP transport channels" (IPTCs) enables some embodiments of the invention to directly communicate with the GGSN without the overhead associated with additional layered protocols (e.g., SNDCP and LLC encapsulated data packets) between the IP packet containing the user data and the transport channel. In this manner, IP packets containing user data transparently traverse from end node (e.g., the UE) to end node (e.g., the GGSN) without the overhead of traditional transport channel encapsulation. Moreover, such data services are enabled without requiring the additional TTG component or other components of an I-WLAN implementation described above.

[**0068**] i. ICS Tunnel Creation

[**0069**] In some embodiments, a GTP tunnel for providing data services is established when the UE registers with the GANC. FIG. **4** presents a message and operation sequence of some embodiments for establishing a single GTP tunnel (e.g., Packet Data Protocol (PDP) context) with a GANC acting as a GTP-User (GTP-U) endpoint. Prior to initiating the data services request, the UE establishes (at step A) a secure IPSec tunnel with the GANC. With the secure IPSec tunnel established, the UE performs (at step B) TCP handshaking with the GANC in order to create a reliable communication pathway. The UE then registers (at step C) with the GANC. During registration the UE sends (at step C) a Register Request message to the GANC. The Register Request message includes various identification information of the UE. For example, the identification information of some embodiments includes the IMSI of the UE and a MAC address associated with an AP through which the UE communicates to the GANC. Additionally, the Register Request message includes information for establishing an IPTC for sending data packets through the ICS and elements of the licensed core network into a data network (e.g., Internet). The IPTC information may include an indication that the UE supports the IPTC feature and the UE UDP port number that the UE wishes to use for the IPTC.

[**0070**] Once the request is received by the GANC, the GANC emulates services of a traditional SGSN in establishing a GTP tunnel with a GGSN over the Gn' interface using established PDP messaging. However, certain overhead and latency is removed due to the fact that a traditional SGSN of a licensed wireless network receives a temporary identifier associated with the UE and would have to determine the permanent identity of the UE (e.g., IMSI) before preceding. Moreover, the SGSN typically contacts a Home Location Register (HLR) to identify subscription data associated with the IMSI of the UE and to request from the HLR authentication data required to authenticate the UE. Once authenticated for GPRS service, the UE receives from the SGSN an accept message to indicate that the UE may proceed with data service. However, such identification and authentication is already present within the GANC after the UE is authenticated and authorized for ICS service (e.g., via communication between the GANC and AAA servers).

[**0071**] Therefore, at step D, the GANC contains all necessary information to establish a PDP context for the UE without the overhead associated with a traditional SGSN (e.g., SNDCP and LLC encapsulation). Moreover, the GANC sends (at step D) a Create PDP Context Request (e.g., activate a PDP context) message to an associated GGSN using the Gn' interface described above. In this manner, the GANC contains a direct Gn' interface with the GGSN without having to introduce a new component such as the TTG into the ICS or the licensed core network.

[**0072**] Prior to sending the request message, the GANC allocates a PDP context data structure which in some embodiments includes the subscriber's IP address, the subscriber's International Mobile Subscriber Identity (IMSI), and a tunnel ID which is a unique number to identify the tunneled data related to a particular PDP context. In some embodiments, the GTP tunnel is further identified with an IP address, a UDP port, and a PDP type specifying the type of payload transferred on the PDP context (e.g., IPV4, IPV6, X.25, PPP, etc.).

[**0073**] The GGSN processes the Context Request message of step D and if a GTP is successfully established, a Create PDP Context Response message is returned (at step E) to the

GANC to indicate that the GTP tunnel is available for the UE to access data services across the GGSN. The GANC conveys (at step F) to the UE that data services are available to the UE through a Register-Accept message containing a GANC-IPTC-Info parameter. The GANC-IPTC-Info parameter contains information for accessing the data services using the IPTC (e.g., the GANC IP address and UDP port number and an IPTC identifier).

[0074] The UE can now access data services in addition to other services authorized by the GANC. For instance, the UE may separately or in conjunction with the data services perform (at step G) location updates, receive voice calls, establish voice calls, or perform other non-data related functions. However, in order to pass data messages across the GTP tunnel, the UE creates (at step H) a UDP message with header information for sending the packet to the GANC and a payload containing the data service message. The UDP packet is forwarded (at step H) to the GANC. The GANC strips (at step I) the IPTC header information in order to place the GTP-U header information for sending the UDP packet to the GGSN. The message is forwarded (at step I) to the GGSN which then routes the packet into the desired data network. When a data packet is received (at step J) at the GGSN, the GGSN forwards the message back to the GANC. The GANC again replaces (at step K) the header information so that the packet is returned to the UE.

[0075] Alternatively, FIG. **5** presents a message and operation sequence of some embodiments for establishing a single PDP context in which the UE acts as a GTP-U endpoint. Steps A-C are similar to those of FIG. **4** in connecting and requesting data services from the ICS. However, at step D, rather than create a tunnel with the GANC as the endpoint, the GANC sends to the GGSN a Create PDP Context Request message in which the control address associated with the tunnel setup messaging contains the address of the GANC while the data address used for passing data packets is assigned an IP addressed associated with the UE. Also, at step F, the GANC sends the data address of the GGSN to the UE plus the required GTP-U tunnel identifiers, rather than the GANC address and IPTC identifier. In this manner, the UE directly passes data packets through the GANC to the GGSN without processing by the GANC and the GGSN passes data packets through the GANC to the UE without processing by the GANC.

[0076] For example, after the GANC notifies (at step F) the UE that a GTP tunnel for data services has been established, the UDP packets sent (at step H) from the UE contain header information for routing directly to the GGSN. Therefore, when such packets arrive at the GANC, the GANC need only look to the destination address field containing the GGSN's IP address and forward the packet to the GGSN. In contrast to FIG. **4**, the message sequence of FIG. **5**, eliminates additional latency by removing processing of the data packets by the GANC from data message pathway. Specifically, the GANC no longer has to process the UDP data packets and need only route them to the already specified destination. Moreover, the GANC no longer maintains overhead information for changing the destination address of incoming UDP data packets to that of the GGSN. This allows the GANC to free resources for other functions.

[0077] FIG. **6** presents a message and operation sequence of some embodiments for establishing multiple PDP contexts through a single secure IPSec tunnel with the GANC in which the GANC acts as a GTP-U endpoint. In this figure, steps A-B establish the communication path between the UE and the GANC. Similarly, at step C a Register Request message is sent from the UE to the GANC, indicating that the UE supports the multiple IPTC feature. After registration of the UE, the GANC responds (at step D) with a Register Accept message to the UE indicating whether the multiple IPTC feature is allowed for the specific UE and if the multiple IPTC feature is supported by the GANC.

[0078] At step E, the UE can continue with other non-data service related procedures (e.g., voice calling). Alternatively, the UE sends (at step F) an Activate-IPTC-REQ message to the GANC. This message informs the GANC to establish a GTP tunnel with the GGSN so that data messages from the UE will successfully be routed through the GGSN to reach their destination in the data network. Therefore, the GANC sends (at step G) a Create PDP Context Request message to the GGSN. In reply, the GGSN will create (at step H) the GTP tunnel and return a Create PDP Context Response to the GANC. The GANC then sends to the UE an Activate-IPTC-ACK to acknowledge that the GTP tunnel for data services was successfully created and providing the necessary IPTC information to the UE (e.g., GANC IP address and UDP port, and IPTC tunnel identifier).

[0079] In this embodiment, the UE may establish multiple GTP tunnels for accessing several different data services simultaneously. Should the UE require multiple data services from different destinations, the UE would issue another Activate-IPTC-REQ message, similar to step F, to inform the GANC to establish an additional GTP tunnel for additional data services. For instance, the UE of some embodiments initiates an instant message chat session while downloading audio. In some embodiments, the UE supports up to eleven current PDP contexts while the GANC supports a virtually unlimited number of PDP contexts based on the data load and internal memory and processing power of the GANC. However, it should be apparent to one of ordinary skill in the art that various UEs may support more or less PDP contexts. Steps J-K illustrate routing of UDP packets through the GANC to the GGSN similar to steps H-K of FIG. **4**.

[0080] In still some other embodiments, the message and operation sequence of FIG. **7** establishes multiple PDP contexts through a single secure IPSec tunnel with the GANC in which the UE acts as the GTP-U endpoint. In this messaging exchange, steps A-I are similar to steps A-I of FIG. **6**. with the modifications to the IPTC information exchange described above for FIG. **5**. In this way, the UDP packets sent from the UE at step J contains the GTP-U header for routing the packet through the GANC directly to the GGSN without requiring the GANC to process or alter header information in the UDP packet in a manner that is analogous to FIG. **5**. However, it should be apparent to one of ordinary skill in the art, that in some embodiments, the GANC may process and convert the UE UDP packet irrespective of whether the UDP packet header contains the GTP-U header. In this manner, the GANC can support functionality for either UEs directly addressing the GGSN or the GANC.

[0081] ii. ICS Tunnel Release

[0082] FIG. **8** illustrates a messaging exchange of some embodiments for releasing a UE initiated tunnel. Step A

summarizes the registration, tunnel setup, and message exchange described with reference to FIGS. **5**, **6**, and **7** above. However, FIG. **8** further includes steps B-E which illustrate the messaging exchange for release of an established GTP tunnel.

[**0083**] When the UE no longer needs data services of the GGSN, it will send (at step B), a release tunnel request to the GANC. The GANC conveys (at step C) the release tunnel message to the GGSN via a Delete PDP Context Request message. After receiving the release request, the GGSN responds (at step D) to the GANC with a Delete PDP Context Response message to indicate that the tunnel will be terminated. The GANC then notifies (at step E) the UE that the tunnel has been successfully released.

[**0084**] Alternatively, in some embodiments illustrated in FIG. **9**, the tunnel release request comes from the network. As illustrated, the GGSN submits (at step B) a Delete PDP Context Request to the GANC which notifies (at step C) the UE of the tunnel release. The UE returns (at step D) an acknowledgement to the GANC indicating that the tunnel may be released. The GANC then relays (at step E) the acknowledgement to the GGSN via a Delete PDP Context Response message. At this point the tunnel is released and specific data services for which the tunnel was intended for are no longer available.

[**0085**] Though FIGS. **8** and **9** have illustrated some embodiments of tunnel releasing, it should be apparent to one of ordinary skill in the art that tunnel release requests may be initiated by other components of the system. For example, a tunnel release request may be initiated by an AAA server should access be denied to the UE at some point during use of the tunnel.

IV. Computer System

[**0086**] FIG. **10** conceptually illustrates a computer system with which some embodiments of the invention are implemented. The computer system **1000** includes a bus **1005**, a processor **1010**, a system memory **1015**, a read-only memory **1020**, a permanent storage device **1025**, input devices **1030**, and output devices **1035**.

[**0087**] The bus **1005** collectively represents all system, peripheral, and chipset buses that support communication among internal devices of the computer system **1000**. For instance, the bus **1005** communicatively connects the processor **1010** with the read-only memory **1020**, the system memory **1015**, and the permanent storage device **1025**.

[**0088**] From these various memory units, the processor **1010** retrieves instructions to execute and data to process in order to execute the processes of the invention. In some embodiments the processor comprises a Field Programmable Gate Array (FPGA), an ASIC, or various other electronic components for executing instructions. The read-only-memory (ROM) **1020** stores static data and instructions that are needed by the processor **1010** and other modules of the computer system. The permanent storage device **1025**, on the other hand, is a read-and-write memory device. This device is a non-volatile memory unit that stores instruction and data even when the computer system **1000** is off. Some embodiments of the invention use a mass-storage device (such as a magnetic or optical disk and its corresponding disk drive) as the permanent storage device **1025**. Some embodiments use one or more removable storage devices (flash memory card or memory stick) as the permanent storage device.

[**0089**] Like the permanent storage device **1025**, the system memory **1015** is a read-and-write memory device. However, unlike storage device **1025**, the system memory is a volatile read-and-write memory, such as a random access memory. The system memory stores some of the instructions and data that the processor needs at runtime.

[**0090**] Instructions and/or data needed to perform processes of some embodiments are stored in the system memory **1015**, the permanent storage device **1025**, the read-only memory **1020**, or any combination of the three. For example, the various memory units contain instructions for processing multimedia items in accordance with some embodiments. From these various memory units, the processor **1010** retrieves instructions to execute and data to process in order to execute the processes of some embodiments.

[**0091**] The bus **1005** also connects to the input and output devices **1030** and **1035**. The input devices enable the user to communicate information and select commands to the computer system. The input devices **1030** include alphanumeric keyboards and cursor-controllers. The output devices **1035** display images generated by the computer system. The output devices include printers and display devices, such as cathode ray tubes (CRT) or liquid crystal displays (LCD). Finally, as shown in FIG. **10**, bus **1005** also couples computer **1000** to a network **1065** through a network adapter (not shown). In this manner, the computer can be a part of a network of computers (such as a local area network ("LAN"), a wide area network ("WAN"), or an Intranet) or a network of networks (such as the Internet).

[**0092**] It should be recognized by one of ordinary skill in the art that any or all of the components of computer system **1000** may be used in conjunction with the invention. For instance, some or all components of the computer system described with regards to FIG. **10** comprise some embodiments of the UE, FAP, GANC, and GGSN described above. Moreover, one of ordinary skill in the art will appreciate that any other system configuration may also be used in conjunction with the invention or components of the invention.

[**0093**] The foregoing description, for purposes of explanation, used specific nomenclature to provide a thorough understanding of the invention. However, it will be apparent to one skilled in the art that specific details are not required in order to practice the invention. Thus, the foregoing descriptions of specific embodiments of the invention are presented for purposes of illustration and description. They are not intended to be exhaustive or to limit the invention to the precise forms disclosed; obviously, many modifications and variations are possible in view of the above teachings. The embodiments were chosen and described in order to best explain the principles of the invention and its practical applications, they thereby enable others skilled in the art to best utilize the invention and various embodiments with various modifications as are suited to the particular use contemplated. For example, data services have been described with respect to text messaging, instant messaging, mobile Internet access, email, and the like. However one of ordinary will realize that any service utilizing data services of a licensed wireless core network (e.g., GPRS) is similarly contained within the above description of data services.

[0094] Moreover, while the invention has been described with reference to numerous specific details, one of ordinary skill in the art will recognize that the invention can be embodied in other specific forms without departing from the spirit of the invention. For instance, specific details of one or more examples can be combined to provision user equipment. Various functionality of a traditional SGSN and TTG may or may not be included within the functionality of the GANC. The disclosed techniques can be used for an integrated system that includes licensed wireless communication systems other than GSM, GPRS, GERAN, or UTRAN or communication systems other than a UMAN. Moreover, the enumerated communication interfaces (e.g., A/Gb lu-cs/lu-ps) are presented as interfaces for certain embodiments of the present invention. It should be noted that any compatible communication interface with the ICS may similarly be adapted to provide the functionality described above.

[0095] Additionally, some embodiments of the ICS referred to user equipment of a licensed communication network. However, it should be apparent one of ordinary skill in the art that various other implementations of the ICS, such as the femtocell architecture described with regards to FIG. **2**, and any associated or compatible user equipment is adaptable to provide the location based services described above. Moreover, certain terms as disclosed may be used interchangeably without diverging from the spirit of the invention.

[0096] In some examples and diagrams, two components may be described or shown as connected to each other. The connection may be a direct wire connection or the two components may be communicatively coupled to each other through other components or through wireless or broadband links. Thus, one of ordinary skill in the art would understand that the invention is not to be limited by the foregoing illustrative details, but rather is to be defined by the appended claims.

APPENDIX I

Table of Acronyms	
AAA	Authorization, Authentication, and Accounting
AP	Access Point
APN	Access Point Name
ASIC	Application-Specific Integrated Circuit
BCCH	Broadcast Channel Control
BSC	Base Station Controller
BSS	Base Station Subsystem
BSSGP	Base Station Subsystem GPRS Protocol
BTS	Base Transceiver Station
CGI	Cell Global Identification
CRT	Cathode Ray Tube
EDGE	Enhanced Data Rates for GSM Evolution
FAP	Femtocell Access Point
GA-PSR	Generic Access Packet Switched Resources
GAN	Generic Access Network
GANC	Generic Access Network Controller
GERAN	GSM EDGE Radio Access Network
GGSN	Gateway GPRS Support Node
GPRS	General Packet Radio Service
GSM	Global System for Mobile Communication
GTP	GPRS Tunneling Protocol
GTP-U	GPRS Tunneling Protocol-User
HLR	Home Location Register
ICS	Integrated Communication System
IMSI	International Mobile Subscriber Identity
INC	IP Network Controller
IP	Internet Protocol

APPENDIX I-continued

Table of Acronyms	
IPTC	Internet Protocol Transport Channel
ISDN	Integrated Services Digital Network
IT	Information Technology
I-WLAN	Interworking Wireless Local Area Network
LAN	Local Area Network
LCD	Liquid Crystal Display
LCS	Location Services
LLC	Logical Link Control
MAC	Media Access Control
MSC	Mobile Switching Center
MSISDN	Mobile Station International ISDN Number
OSI	Open System Interconnection
PDG	Packet Data Gateway
PDN	Packet Data Network
PDP	Packet Data Protocol
PLD	Programmable Logic Device
PLMN	Public Land Mobile Network
POTS	Plain Old Telephone Service
QoS	Quality of Service
RAM	Random Access Memory
RAN	Radio Access Network
RANAP	Radio Access Network Application Part
RNC	Radio Network Controller
ROM	Read Only Memory
SeGW	Security Gateway
SGSN	Serving GPRS Support Node
SIM	Subscriber Identity Mobile
SIP	Session Initiation Protocol
SMS	Short Message Service
SSID	Service Set Identifier
TTG	Terminal Tunnel Gateway
UDP	User Datagram Protocol
UE	User Equipment
UMTS	Universal Mobile Telecommunication System
UMA	Universal Mobile Access
UNC	Universal Network Controller
UTRAN	UMTS Terrestrial Radio Access Network
VoIP	Voice Over IP
WAN	Wide Area Network
WLAN	Wireless Local Area Network
WAG	Wireless Access Gateway
WiMAX	Worldwide Interoperability for Microwave Access
WLAN	Wireless Local Area Network

[0097]

APPENDIX II

Listing of Cited References
3GPP TS 23.234, "3GPP System to Wireless Local Area Network (WLAN) Interworking" (Release 6, June 2005)

What is claimed is:

1. A method comprising:

a) at a network controller of a first communication network, providing circuit switched voice services for user equipment;

b) establishing at least one session between the network controller and a gateway to a packet services network, wherein said gateway is a component of a licensed wireless second communication network;

c) through said session, providing packet switched data services for the user equipment.

2. The method of claim 1, wherein the at least one session does not pass through a Serving GPRS Support Node (SGSN) of the second communication network.

3. The method of claim 2, wherein the at least one session comprises a GPRS Tunneling Protocol (GTP) tunnel between the network controller and the gateway.

4. The method of claim 1, wherein the gateway is a Gateway GPRS Support Node (GGSN) of the second communication network.

5. The method of claim 1, wherein providing packet switched data services comprises routing data packets received from the user equipment through the network controller to the gateway.

6. The method of claim 5, wherein the data packets sent from the user equipment identify the gateway as a destination.

7. The method of claim 6, wherein routing the data packets comprises forwarding the data packets from the network controller to the gateway without modifying said packets.

8. The method of claim 5, wherein the gateway routes said data packets to the packet services network.

9. The method claim 1, wherein the at least one session comprises at least two sessions.

10. For a network controller of a first communication network, the network controller comprising circuit switched and packet switched interfaces, a method comprising:

a) receiving voice and data service requests from a user equipment;

b) processing said voice service requests through the network controller's circuit switched interface to a licensed wireless second communication network; and

c) processing said data service requests through the network controller's packet switched interface to a gateway to a packet services network, wherein said gateway is a component of the second communication network, wherein processing the data service request comprises establishing at least one session for passing and receiving data packets from the network controller to the gateway.

11. The method of claim 10, wherein the second communication system comprises one of a GSM/GPRS system, a GSM EDGE Radio Access Network (GERAN), and a UMTS Terrestrial Radio Access Network (UTRAN) system.

12. The method of claim 10, wherein the at least one session does not pass through a Serving GPRS Support Node (SGSN) of the second communication network.

13. The method of claim 11, wherein the at least one session comprises a GPRS Tunneling Protocol (GTP) tunnel between the network controller and the gateway.

14. The method of claim 10, wherein the gateway is a Gateway GPRS Support Node (GGSN) of the second communication network.

15. The method of claim 10, wherein the gateway passes and receives data packets from the network controller to the packet services network.

16. A method of operating a network controller of a first communication network, the method comprising:

a) establishing a first secure session with a user equipment;

b) receiving over the first secure session, a plurality of data service requests from the user equipment;

c) for each of the data service requests, establishing a separate session with a gateway to a packet services network, wherein said gateway is a component of a licensed wireless second communication network.

17. The method of claim 16, wherein the first secure session is established using an IP security (IPSec) protocol.

18. The method of claim 16, wherein the session with the gateway comprises a GPRS Tunneling Protocol (GTP) tunnel between the network controller and the gateway.

19. The method of claim 16 further comprising receiving over the first secure session a voice service request, wherein the network controller processes said voice service request through a circuit switched interface, wherein said circuit switched interface links the network controller to a switching center of the second communication network.

20. A method of operating a network controller of a first communication network, the method comprising:

a) establishing a first secure session between a user equipment and the network controller;

b) establishing a second session between the network controller and a gateway to a packet services network, wherein said gateway is a component of a licensed wireless second communication network;

c) receiving over the first secure session, Internet Protocol (IP) data packets from the user equipment; and

d) routing over the second session, said IP packets to the gateway.

21. The method of claim 21, wherein the IP data packets sent from the user equipment identify the gateway as a destination.

22. The method of claim 22, wherein routing the IP packets over the first and second sessions does not require modifying said IP packets.

23. The method of claim 21, wherein routing the IP packets over the second session comprises replacing the header information of said data packets prior to routing the IP packets to the gateway.

24. The method of claim 21, wherein the gateway routes said IP packets to the packet services network.

25. A readable storage medium storing a set of instructions for execution by one electronic component, the readable storage medium comprising sets of instructions for:

a) providing circuit switched voice services for user equipment;

b) establishing at least one session with a gateway to a packet services network, wherein said gateway is a component of a licensed wireless second communication network; and

c) through said session, providing packet switched data services for the user equipment.

26. The readable storage medium of claim 25, wherein providing packet switched data services comprises routing the IP data packets from the user equipment to the gateway.

27. The readable storage medium of claim 26, wherein routing the IP data packets does not require modifying said IP packets.

28. The readable storage medium of claim 25, wherein the at least one session does not pass through a Serving GPRS Support Node (SGSN) of the licensed wireless communication network.

29. The readable storage medium of claim 28, wherein the at least one session with the gateway comprises a GPRS Tunneling Protocol (GTP) tunnel.

30. The readable storage medium of claim 25, wherein the gateway is a Gateway GPRS Support Node (GGSN) of the licensed wireless communication network.

31. The readable storage medium of claim 25, wherein providing circuit switched voice services comprises sets of instructions for communicating with a switching center of the licensed wireless communication network.

* * * * *