UNITED STATES DISTRICT COURT
EASTERN DISTRICT OF TEXAS
MARSHALL DIVISION

LONGITUDE LICENSING LIMITED and 138 EAST LCD ADVANCEMENTS LIMITED, Plaintiffs, v. BOE TECHNOLOGY GROUP CO., LTD., and LG ELECTRONICS, INC., Defendants.	Civil Action No. 2:25-cv-440 **JURY TRIAL DEMANDED**

COMPLAINT FOR PATENT INFRINGEMENT

Plaintiffs Longitude Licensing Limited and 138 East LCD Advancements Limited file this complaint for patent infringement against Defendants BOE Technology Group Co., Ltd., and LG Electronics, Inc.

INTRODUCTION

1. This is an action for patent infringement under the Patent Laws of the United States, 35 U.S.C. § 1 *et seq*. Plaintiffs allege that Defendants have infringed and continue to infringe, directly and indirectly, three patents: U.S. Patent Nos. 7,636,146 ("the '146 patent"), 8,319,512 ("the '512 patent"), and 8,391,020 ("the '020 patent") (collectively, the "Longitude Patents"). *See* Exs. 1-3.

2. The Longitude Patents are directed to foundational liquid crystal display ("LCD") technologies used in modern display devices, panels, and/or modules.

3. Defendant BOE Technology Group Co., Ltd., has infringed and continues to infringe the Longitude Patents, directly and indirectly, by (1) making, using, offering to sell,

selling, and/or importing into the United States LCD panels and/or modules that include the claimed inventions of the Longitude Patents; (2) inducing third parties (e.g., BOE customers—including LG Electronics, Inc.—and end users) to make, use, offer to sell, sell, and/or import into the United States BOE products (e.g., LCD panels and/or modules) that include the claimed inventions of the Longitude Patents, with knowledge of the Longitude Patents and with specific intent to cause the third parties' infringement; and (3) contributing to third parties' (e.g., BOE customers and end users) direct infringement of the Longitude Patents by offering to sell, selling, and/or importing into the United States components of patented devices, which constitute a material part of the claimed inventions, with knowledge of the Longitude Patents and of the third parties' infringement.

4. Defendant LG Electronics, Inc., has infringed and continues to infringe the Longitude Patents, directly and indirectly, by (1) making, using, offering to sell, selling, and/or importing into the United States products that incorporate BOE LCD panels and/or modules that include the claimed inventions of the Longitude Patents; and (2) inducing third parties (e.g., LG customers and end users) to use, offer to sell, sell, and/or import into the United States LG products (e.g., monitors and TVs including a BOE LCD panel and/or module) that include the claimed inventions of the Longitude Patents, with knowledge of the Longitude Patents and with specific intent to cause the third parties' infringement.

5. Plaintiffs seek damages and other relief for Defendants' infringement of the Longitude Patents.

THE PARTIES

6. Plaintiff Longitude Licensing Limited is a private limited company organized and existing under the laws of the Republic of Ireland, having a principal place of business at Plaza

255, Suite 2A, Blanchardstown Corporate Park 2, Dublin 15, D15 YH6H, Ireland.

7. Plaintiff 138 East LCD Advancements Limited is a private limited company organized and existing under the laws of the Republic of Ireland, having a principal place of business at Plaza 255, Suite 2A, Blanchardstown Corporate Park 2, Dublin 15, D15 YH6H, Ireland.

8. On information and belief, Defendant BOE Technology Group Co., Ltd. ("BOE") is a company organized and existing under the laws of the P.R. China, having a principal place of business at No. 12, Xihuanzhong Road, BDA, Beijing, 100176, P.R. China.

9. On information and belief, Defendant LG Electronics, Inc., is a company organized under the laws of the Republic of Korea, having a principal place of business at LG Twin Towers, 128 Yeoui-daero, Yeongdeungpo-gu, Seoul 07336, Republic of Korea.

JURISDICTION AND VENUE

10. This Court has subject matter jurisdiction over this case pursuant to 28 U.S.C. §§ 1331 and 1338(a).

11. Venue is proper in this District pursuant to 28 U.S.C. § 1391(c)(3) because BOE and LG do not reside in the United States and thus may be sued in any judicial district in the United States.

I. BOE

12. This Court may exercise general and specific personal jurisdiction over BOE consistent with the requirements of the Due Process Clause of the United States Constitution and the Texas Long Arm Statute. On information and belief, BOE has intentionally manufactured and/or distributed LCD panels and/or modules that infringe the Longitude Patents, and/or caused its subsidiaries, affiliates, or intermediaries to manufacture and/or distribute infringing LCD

panels and/or modules, through established distribution channels, intending that those products be sold in the United States, the State of Texas, and this District. BOE holds itself and its subsidiaries out as a single global entity serving the United States. For example, according to BOE's website, its "subsidiaries span 20 countries and regions, including the United States," and "[i]ts service network covers major regions in Europe, the Americas, Asia, Africa and beyond." https://www.boe.com/en/about/index (last accessed Mar. 20, 2025).

13. Further, BOE has (itself and/or through subsidiaries, affiliates, or intermediaries) committed acts of patent infringement in the United States, the State of Texas, and this District, including by offering to sell, selling, and/or importing infringing BOE LCD panels and/or modules in the United States, the State of Texas, and this District and/or inducing others to commit acts of patent infringement and/or contributing to direct infringement in the United States, the State of Texas, and this District.

14. On information and belief, BOE knows or should reasonably expect that the infringing BOE LCD panels and/or modules are incorporated in finished consumer products sold in the United States, including in Texas (the U.S. state with the second-highest population) and this District. BOE knows and intends that the infringing BOE LCD panels and/or modules will be incorporated into finished consumer products, such as smartphones, tablets, notebooks, monitors, automotive displays, and TVs, including LG monitors and TVs. On information and belief, BOE knows or should reasonably expect that finished consumer products, such as LG monitors and TVs and other consumer electronic devices identified and described *infra*, incorporating infringing BOE LCD panels and/or modules are sold in numerous retail locations throughout the United States, including in Texas and in this District.

15. Accordingly, BOE has established minimum contacts within the forum and

purposefully availed itself of the benefits of Texas, and the exercise of personal jurisdiction over BOE would not offend traditional notions of fair play and substantial justice. In addition, or in the alternative, this Court has personal jurisdiction over BOE pursuant to Federal Rule of Civil Procedure 4(k)(2).

II. LG

16. This Court may exercise general and specific personal jurisdiction over LG consistent with the requirements of the Due Process Clause of the United States Constitution and the Texas Long Arm Statute. On information and belief, LG, including through its subsidiaries, affiliates, or intermediaries, including subsidiary LG Electronics USA, Inc., has intentionally manufactured and/or distributed products that incorporate BOE LCD panels and/or modules that infringe the Longitude Patents, through established distribution channels, intending that those products be sold in the United States, the State of Texas, and this District. For example, according to LGEUS's website, "LG Electronics USA, Inc., (LGEUS) is the North American subsidiary of LG Electronics, Inc., a global force in consumer electronics, home appliances, and more" and "sells a wide range of digital display and digital media products, digital appliances, and electric vehicle chargers under LG's 'Life's Good' marketing theme" "[i]n the United States[.]" https://www.lg.com/us/business/corporate-profile (last accessed Mar. 31, 2025). Moreover, according to LG's website, "LG Electronics is a global innovator in technology and consumer electronics with a presence in almost every country and an international workforce of more than 74,000," and it is "a leading manufacturer of consumer and commercial products ranging from TVs, home appliances, air solutions, monitors, automotive components and solutions, and its premium LG SIGNATURE and intelligent LG ThinQ brands are familiar names world over." https://www.lgnewsroom.com/about/about-lg/ (last accessed Mar. 31, 2025).

17. LG has (itself and/or through subsidiaries, affiliates, or intermediaries) committed acts of patent infringement in the United States, the State of Texas, and this District, including by making, using, offering to sell, selling and/or importing products that incorporate infringing BOE LCD panels and/or modules in the United States, the State of Texas, and this District and/or inducing others to commit acts of patent infringement in the United States, the State of Texas, and this District.

18. On information and belief, LG knows or should reasonably expect that the accused LG monitors and TVs incorporating BOE LCD panels and/or modules are sold in the United States, including in Texas (the U.S. state with the second-highest population) and this District. On information and belief, LG knows or should reasonably expect that LG's distribution channel—comprising its subsidiaries—is arranged in a way that a termination point of the channel includes the State of Texas and/or this District. On information and belief, LG knows or should reasonably expect that LG monitors and TVs incorporating BOE LCD panels and/or modules are sold in numerous retail locations throughout the United States, including in Texas and in this District.

19. Accordingly, LG has established minimum contacts within the forum and purposefully availed itself of the benefits of Texas, and the exercise of personal jurisdiction over the LG would not offend traditional notions of fair play and substantial justice. In addition, or in the alternative, this Court has personal jurisdiction over LG pursuant to Federal Rule of Civil Procedure 4(k)(2).

FACTUAL BACKGROUND

I. The Longitude Patents

20. Longitude is a privately owned intellectual property management company.

Among other holdings, Longitude manages and licenses a portfolio of approximately 800 active patents worldwide directed to display technologies. Longitude is the exclusive worldwide licensee of the Longitude Patents with exclusive rights to sublicense, enforce, and obtain damages, including past damages, for infringement of the Longitude Patents.

21. The ’146 patent, entitled “Electro-Optical Panel, System with Terminals Having Different Corresponding Characteristics,” duly and legally issued on December 22, 2009, from a patent application filed August 6, 2004, with Shin Fujita as the sole named inventor. The ’146 patent claims priority to Foreign (JP) Patent Application Nos. 2003-290650, filed on August 8, 2003, and 2004-193515, filed June 30, 2004. The claimed inventions relate to an electro-optical panel, for example, an LCD panel, design that optimizes terminal configurations to enhance signal integrity. By employing input terminals of varying sizes—larger terminals for higher-frequency driving signals and smaller terminals for image signals—the invention minimizes contact resistance and prevents signal degradation. This design improves display performance by ensuring precise signal transmission, reducing distortion, and enhancing overall image quality.

22. The ’512 patent, entitled “Flexible Substrate Including Inspection Electrode for Outputting Signal Processed in Integrated Circuit, Electro-Optical Device, and Electronic Device,” duly and legally issued on November 27, 2012, from a patent application filed March 12, 2010, with Katsutoshi Ueno as the sole named inventor. The ’512 patent claims priority to Foreign (JP) Patent Application No. 2009-069825, filed on March 23, 2009. The claimed inventions relate to a flexible substrate incorporating an inspection electrode to facilitate signal monitoring and quality control. By electrically connecting the inspection electrode to an integrated circuit, the invention allows for real-time output signal assessment, improving the reliability of circuit performance. This design enhances the manufacturing process by enabling

more efficient testing, reducing defects, and ensuring higher-quality electro-optical and electronic devices.

23. The ’020 patent, entitled “Electro-Optical Device, Electro-Optical Panel, and Electronic Apparatus” duly and legally issued on March 5, 2013, from a patent application filed December 1, 2010, with Munehide Saimen as the sole named inventor. The ’020 patent claims priority to Foreign (JP) Patent Application No. 2009-275218, filed on December 03, 2009, and 2010-214838, filed September 27, 2010. The claimed inventions relate to an electro-optical device featuring an optimized terminal and wiring configuration to enhance electrical connectivity and reliability. By implementing structured terminal groupings and dedicated connection wiring, the invention ensures stable signal transmission between circuit substrates and the electro-optical panel. This design reduces signal degradation, improves device performance, and enhances the durability of electronic apparatuses utilizing the electro-optical panel.

24. Each of the Longitude Patents is valid and enforceable.

25. BOE and LG are not authorized to practice the Longitude Patents.

26. The claimed inventions of the Longitude Patents enable BOE and LG to sell LCD panels and/or modules, and/or monitors and TVs that incorporate these LCD panels and/or modules, with improved consumer-facing benefits, including improved image quality and brightness, and to realize improvements in manufacturing yields and costs.

II. The Inventors

27. The Longitude Patents describe and claim inventions developed by Seiko Epson Corporation (“Epson”). Epson is a Japanese electronics company that is a pioneer in the development of LCD technologies and a recognized innovator in the semiconductor and

electronics components and devices spaces. The Longitude Patents cover foundational LCD innovations that Epson developed.

III. BOE

28. BOE is a Chinese multinational corporation that designs, manufactures, and sells electronic components. Headquartered in Beijing, BOE operates manufacturing facilities in at least 10 cities across China. According to its annual reports, BOE comprises five core operating divisions: (1) Display Devices, (2) IoT Innovation, (3) Sensors, (4) MLED, and (5) Smart Medical Engineering. BOE's Display Devices business, through which it supplies customers with LCD and OLED display panels and modules for end-device applications including smartphones, tablets, notebooks, monitors, TVs, and automotive displays, accounted for more than 88 percent of BOE's 2022 operating revenue and more than 92 percent of its 2021 operating revenue. BOE's Display Devices business is a world leader in the global semiconductor display industry; for example, BOE's 2023 annual report states that BOE's semiconductor display products rank first in the world in terms of shipment volume, and its LCD panels and modules rank first for the five mainstream applications (end devices) for LCD displays: smartphones, tablets, notebooks, monitors, and TVs. In the first half of 2024, the Display Devices business accounted for 83.54 percent of BOE's operating revenue.

29. On information and belief, BOE's Display Devices business provides LCD, OLED, and other display technology components, including display panels and modules, to third parties—including, for example, LG—that then incorporate BOE display panels and modules into devices for end users. BOE's 2023 annual report refers to these third parties as its "brand customers."

30. On information and belief, BOE targets the United States for its sales of display

panels and modules. For example, BOE's 2023 annual report states that approximately 20 percent of BOE's 2023 operating revenue was from BOE's "America" operating segment, which includes the United States. BOE's 2023 annual report also states that BOE ranked eleventh worldwide in terms of entities with the most U.S. patents granted, and that it has been among the global top 20 U.S. patent grantees for five consecutive years—BOE obtains U.S. patents to protect the U.S. market for its products. Furthermore, in a January 2017 press release, Li Xinguo, BOE Vice President and Director of BOE's Intellectual Property and Technology Management Center, commented on BOE's inclusion in the 2016 top 50 entities granted patent assignments by the USPTO, stating, "[i]n the past, BOE applied for patents mainly to protect our products. Now, we also seek to increase the market shares of our products. Patent grants will not only support our business but also drive development of our business." BOE Press Release, "BOE ranked 40th in the Top 50 USPTO Patent Assignees in 2016," Jan. 12, 2017, available at https://www.boe.com/en/company/dynamic-891ce385fc934f698f223a3072960c7e (last accessed Mar. 20, 2025).

31. On information and belief, BOE targets the U.S. market for its display panels and modules, including through its U.S.-based subsidiary, BOE Technology America, Inc. ("BOE America"). BOE's global website states that BOE America currently has three offices in the United States. On information and belief, BOE established BOE America for the purpose of strategic brand customer development and support in the United States and North America.

32. BOE America is an extension of BOE. On information and belief, BOE America is controlled by BOE and under common ownership with BOE. According to BOE America's corporate filings, its officers and directors are also high-level BOE (the Chinese parent) employees, indicating that BOE America exists for the purpose of serving BOE's market in the

United States for LCD panels and modules.

33. Thus, BOE—directly and/or through its subsidiaries, affiliates, or intermediaries—has imported, offered to sell, and sold, and continues to import, offer to sell, and sell, infringing LCD panels and modules in the United States through established distribution channels. BOE intends to sell and does sell infringing products in the United States, the State of Texas, and this District.

IV. LG

34. On information and belief, LG manufactures and/or distributes electronic display products (e.g., monitors and TVs) that incorporate BOE LCD panels and/or modules for sale to customers and end users in the United States.

35. On information and belief, LG targets the United States for its sales. For example, LG established LG Electronics USA., Inc. ("LGEUS") as its U.S. headquarters, to bring a full range of electronics and appliances into the North American market. LG Electronics owns 100% of LGEUS. *See* LG Electronics' 2024 Q3 Interim Condensed Financial Statements Report, 21. LG has publicized its plans to expand its footprint in the United States market.

36. On information and belief, LGEUS is an extension of LG. Corporate filings reveal that several of LGEUS's officers and directors are senior executives from LG, underscoring the subsidiary's role in executing LG's U.S. business strategy for consumer electronics.

37. On information and belief, LG manufactures and sells display products, including monitors and TVs, incorporating BOE LCD panels and/or modules across the globe. As of May 2024, LG placed second in the global TV market in terms of revenue with a 16.6% market share. https://www.businesskorea.co.kr/news/articleView.html?idxno=217480 (last accessed Mar. 31, 2025). During the first quarter of 2024, LG shipped about 5,411,000 units worldwide. *Id.*

38. Thus, LG—directly and/or through its subsidiaries, affiliates, or intermediaries—has imported, offered to sell, and sold, and continues to import, offer to sell, and sell infringing products in the United States through established distribution channels. LG intends to sell and does sell infringing products in the United States, the State of Texas, and this District.

V. BOE's Direct Infringement and Accused Instrumentalities

39. BOE has directly infringed and continues to directly infringe, pursuant to 35 U.S.C. § 271(a), one or more claims of each of the Longitude Patents (as further specified in Counts I-III) by making, using, offering to sell, selling within the United States, and/or importing into the United States, infringing LCD panels and modules (the "BOE Accused Instrumentalities").

40. The BOE Accused Instrumentalities include LCD panels and modules incorporated in third-party products, including smartphones, tablets, notebooks, monitors, TVs, and vehicle infotainment displays.

41. On information and belief, BOE imports, offers to sell, and sells BOE Accused Instrumentalities in the United States and provides BOE Accused Instrumentalities to third parties for sale in the United States as part of third-party products, including LG monitors and TVs, and BOE actively targets the U.S. market for sales of the BOE Accused Instrumentalities. For example, on information and belief, BOE sells BOE Accused Instrumentalities to customers for incorporation into electronic devices, and those sales occur in the United States. For example, BOE sells infringing LCD modules, a subset of the BOE Accused Instrumentalities, to LG for incorporation into monitors and TVs. On information and belief, a portion of BOE's sales of infringing LCD modules occur in the United States.

42. The above-described acts of direct infringement committed by BOE have caused

and will continue to cause injury and damage to Plaintiffs.

VI. LG's Direct Infringement and Accused Instrumentalities

43. LG has directly infringed and continues to directly infringe, pursuant to 35 U.S.C. § 271(a), one or more claims of each of the Longitude Patents (as further specified in Counts I-III) by making, using, offering to sell, selling within the United States, and/or importing into the United States, products that incorporate infringing BOE LCD panels and modules (the "LG Accused Instrumentalities").

44. On information and belief, LG imports, offers to sell, and sells LG Accused Instrumentalities in the United States and provides LG Accused Instrumentalities to third parties for sale in the United States, and LG actively targets the U.S. market for sales of the LG Accused Instrumentalities. For example, on information and belief, LG sells LG Accused Instrumentalities to end users and distributors in the United States.

45. The above-described acts of direct infringement committed by LG have caused and will continue to cause injury and damage to Plaintiffs.

VII. Plaintiffs Provided Actual Notice of Infringement to BOE

46. Plaintiffs provided actual notice, pursuant to 35 U.S.C. § 287(a), of two of the Longitude Patents and the alleged infringement over the course of their licensing negotiations with BOE.

47. Plaintiffs' licensing negotiations with BOE began on or around January 2, 2020, when 138 East, the owner of the patent portfolio including the Longitude Patents, sent a letter (the "Initial Notice") to BOE. That letter identified Longitude as the entity that would represent 138 East during licensing negotiations with BOE. Longitude and its licensing representatives then participated in at least sixteen licensing meetings and exchanged with BOE numerous claim

charts relating to the Longitude Patents and BOE's infringing products, between approximately September 2020 and January 2024.

48. Over the course of those licensing negotiations, Plaintiffs provided actual notice to BOE of BOE's infringement of the '146 and '512 patents and identified, in claim charts and in letters, exemplary infringing third-party devices incorporating BOE Accused Instrumentalities, including LCD panels or modules used in TVs, monitors, and notebooks.

49. Plaintiffs provided to BOE actual notice of BOE's infringement of the '146 patent on or around January 2, 2020, as part of the Initial Notice.

50. Plaintiffs provided to BOE actual notice of BOE's infringement of the '512 patent on or around April 8, 2021, in technical presentations to BOE during licensing negotiations.

51. Plaintiffs provided to BOE actual notice of BOE's infringement of the '020 patent on or around the filing of this complaint.

52. Plaintiffs proposed reasonable licensing terms to BOE, as part of the parties' ongoing licensing negotiations, but BOE has consistently rejected the offers.

53. BOE continued to directly and indirectly infringe the Longitude Patents after Plaintiffs provided actual notice of BOE's infringement of the Longitude Patents and identified exemplary third-party devices incorporating BOE Accused Instrumentalities. BOE knew or should have known that its conduct infringed the Longitude Patents. BOE's continued and continuing direct and indirect infringement was and is deliberate and intentional. BOE has therefore willfully infringed each Longitude Patent at least since Plaintiffs identified specific patents and infringement to BOE during the course of the parties' licensing negotiations: BOE has willfully infringed the '146 patent since at least January 2, 2020; and the '512 patent since at least April 8, 2021, or at least as of the filing of the complaint in this case.

54. Plaintiffs provided to BOE actual notice of LG's infringement of the '146, '512, and'020 patents on or around the filing of this complaint.

VIII. Plaintiffs Provided Actual Notice of Infringement to LG

55. Plaintiffs provided to LG actual notice of LG's infringement of the '146 patent based on BOE panels on or around September 27, 2023, under 35 U.S.C. § 287(a).

56. LG received actual notice of the '512 patent on or around September 15, 2022. Plaintiffs provided to LG actual notice of LG's infringement of the '512 patent based on BOE panels on or around the filing of this complaint.

57. Plaintiffs provided to LG actual notice of LG's infringement of the '020 patent based on BOE panels on or around the filing of this complaint.

58. LG continued to directly and indirectly infringe the Longitude Patents after Plaintiffs provided actual notice of LG's infringement of the Longitude Patents and identified exemplary LG Accused Instrumentalities incorporating BOE Accused Instrumentalities. LG knew or should have known that its conduct infringed the Longitude Patents. LG's continued and continuing direct and indirect infringement was and is deliberate and intentional. LG has therefore willfully infringed each Longitude Patent at least since Plaintiffs identified specific patents and infringement to LG.

IX. BOE's Indirect Infringement

59. BOE has indirectly infringed and continues to indirectly infringe the Longitude Patents by inducing infringement by third parties under 35 U.S.C. § 271(b), including BOE's customers (including LG) that incorporate the BOE Accused Instrumentalities into other electronic devices, and further including other importers, resellers, and end users in BOE's supply chain, in this District and elsewhere in the United States and the State of Texas. For

example, BOE has sold BOE Accused Instrumentalities to LG, for incorporation into LG monitors and TVs, which on information and belief were and are available for sale through LG's authorized retailers, including Walmart and Best Buy, in this District, specifically, Walmart Marshall Supercenter, 1701 E End Blvd N., Marshall, TX 75670, and Best Buy, 422 W Loop 281, Ste. 100, Longview, TX 75605.

60. BOE has induced, and continues to induce, others' direct infringement of the Longitude Patents by selling BOE Accused Instrumentalities to third-party customers, including consumer electronics manufacturers and/or sellers, who then directly infringe by making, using, offering to sell, and/or selling within the United States, and/or importing into the United States, infringing products.

61. BOE knew and specifically intended that its customers and other importers, resellers, and end users in BOE's supply chain would sell infringing products in the United States and/or cause BOE Accused Instrumentalities to be sold in the United States—or deliberately avoided learning of the infringing circumstances so as to be willfully blind to the infringement that was induced. BOE specifically intended that its customers and other importers, resellers, and end users in BOE's supply chain would make, use, sell, or offer to sell BOE Accused Instrumentalities in the United States, or import BOE Accused Instrumentalities into the United States, as discussed in § V above.

62. BOE has induced others' direct infringement despite actual notice that the BOE Accused Instrumentalities infringe the Longitude Patents, as described herein. BOE therefore has caused its third-party customers and other importers, resellers, and end users in BOE's supply chain to directly infringe the Longitude Patents with knowledge of the Longitude Patents and specific intent that the customers would directly infringe, or deliberately avoided learning of the

infringing circumstances so as to be willfully blind to the infringement that was induced.

63. BOE also has contributed to and continues to contribute to direct infringement of the Longitude Patents by third parties, including its customers and other importers, resellers, and end users in BOE's supply chain, in violation of 35 U.S.C. § 271(c). BOE offers to sell, sells, and/or imports into the United States components of patented devices—specifically, certain BOE LCD panels and modules. Those BOE LCD panels and modules constitute a material part of the infringing third-party electronic devices into which they are incorporated. BOE knew that those Accused Instrumentalities were especially made for use in infringing the Longitude Patents after receiving actual notice of those patents. The BOE Accused Instrumentalities that are incorporated into these third-party electronic devices have no substantial non-infringing use outside of those devices.

64. BOE specifically intends to cause the acts constituting direct infringement because it derives significant revenue by selling BOE Accused Instrumentalities to third parties who directly infringe one or more claims of the Longitude Patents. On information and belief, BOE's Display Devices business's sales of LCD and OLED display panels and modules to third-party brand customers in the Americas accounted for approximately 20 percent of BOE's 2022 operating revenue, as discussed above in § III. On information and belief, a significant portion of BOE's Americas operating revenue is generated from sales of BOE Accused Instrumentalities to BOE's brand customers in the United States for inclusion in third-party devices, for example, smartphones, tablets, notebooks, monitors, TVs, and automotive displays sold in the United States. And as discussed in § V, BOE specifically targets the United States market as a destination for sales of BOE Accused Instrumentalities, actively seeks to develop strategic brand customer relationships with third parties that sell devices incorporating BOE Accused

Instrumentalities to end users in the United States, and provides services to its existing brand costumers in the United States.

65. The above-described acts of indirect infringement committed by BOE have caused and will continue to cause injury and damage to Plaintiffs.

X. LG's Indirect Infringement

66. LG has indirectly infringed and continues to indirectly infringe the Longitude Patents by inducing infringement by its customers under 35 U.S.C. § 271(b), including other importers, resellers, and end users in LG's supply chain, in this District and elsewhere in the United States and the State of Texas.

67. On information and belief, LG, itself or through LGEUS or other subsidiaries, affiliates, intermediaries, representatives, and/or agents, regularly transacts and does business within this District, including researching, designing, importing into, distributing, advertising, promoting, and selling products that incorporate infringing BOE LCD panels and/or modules. LG sells the LG Accused Instrumentalities to citizens and/or distributors residing within the State of Texas and/or this District. For example, LG has authorized retailers that offer to sell and sell products that incorporate BOE LCD panels and/or modules that infringe the Longitude Patents throughout the State of Texas, including in this District and to consumers in this District, including, on information and belief: Best Buy, 422 W Loop 281, Ste. 100, Longview, TX 75605.

68. LG has induced, and continues to induce, others' direct infringement of the Longitude Patents by selling LG Accused Instrumentalities to customers, who then directly infringe by using, offering to sell, and/or selling within the United States, and/or importing into the United States, the LG Accused Instrumentalities.

69. LG knew and specifically intended that its customers and other importers, resellers, and end users in LG's supply chain would sell infringing LG Accused Instrumentalities in the United States and/or cause LG Accused Instrumentalities to be sold in the United States—or deliberately avoided learning of the infringing circumstances so as to be willfully blind to the infringement that was induced. LG specifically intended that its customers and other importers, resellers, and end users in LG's supply chain would use, sell, or offer to sell LG Accused Instrumentalities in the United States, or import LG Accused Instrumentalities into the United States, as discussed in §§ IV, VI above.

70. The above-described acts of indirect infringement committed by LG have caused and will continue to cause injury and damage to Plaintiffs.

COUNT I: INFRINGEMENT OF U.S. PATENT NO. 7,636,146

71. Pursuant to 35 U.S.C. § 282, the '146 patent is presumed valid.

72. BOE and LG have directly infringed and continue to directly infringe one or more claims of the '146 patent, in violation of 35 U.S.C. § 271(a), by making, using, offering to sell, selling, and/or importing the BOE Accused Instrumentalities (BOE) and the LG Accused Instrumentalities (LG).

73. The BOE Accused Instrumentalities and the LG Accused Instrumentalities (which incorporate a BOE Accused Instrumentality) comprise the electro-optical panel of at least claim 23 of the '146 patent.

74. The following paragraphs describe how the BOE Accused Instrumentalities and thus the LG Accused Instrumentalities practice claim 23 of the '146 patent, using the exemplary BOE LCD panel (part number MV270QUM-N50) in the LG 27" 4K UHD IPS display (model number 27SR73U). Plaintiffs' allegations of infringement are not limited to claim 23 or to the

exemplary product, and Plaintiffs will identify and disclose additional infringement through discovery and in infringement contentions.

75. The LG 27" 4K UHD IPS display (model number 27SR73U) is exemplary of other infringing LG products, including without limitation the LG 55" 4K UHD TV (model number 55UT7570PUB), which incorporates a substantially similar BOE LCD panel, and other monitors and TVs incorporating substantially similar BOE LCD panels and/or modules. The 27" display and 55" TV and substantially similar products incorporating substantially similar BOE LCD panels and/or modules each practice the asserted claims of the '146 patent in the same manner, and infringement by one representative product is indicative of infringement by the others.

76. The LCD panel in the LG 27" 4K UHD IPS display (model number 27SR73U) is a BOE LCD panel, as indicated by the "BOE" logo on the printed circuit board. BOE LCD panels and modules, including, for example, the BOE LCD panel (part number MV270QUM-N50) in LG monitors, including, for example, the LG 27" 4K UHD IPS display (model number 27SR73U), are electro-optical LCD panels.

LG 27" 4K UHD IPS Display (Model No. 27SR73U), Package

LG 27" 4K UHD IPS Display (Model No. 27SR73U), Front

LG 27" 4K UHD IPS Display (Model No. 27SR73U), Back

LG 27" 4K UHD IPS Display (Model No. 27SR73U), Back

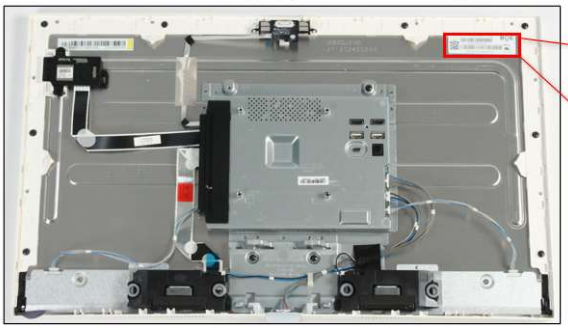

LG 27" 4K UHD IPS Display (Model No. 27SR73U), Back

LG 27" 4K UHD IPS Display (Model No. 27SR73U), LCD Panel (front)

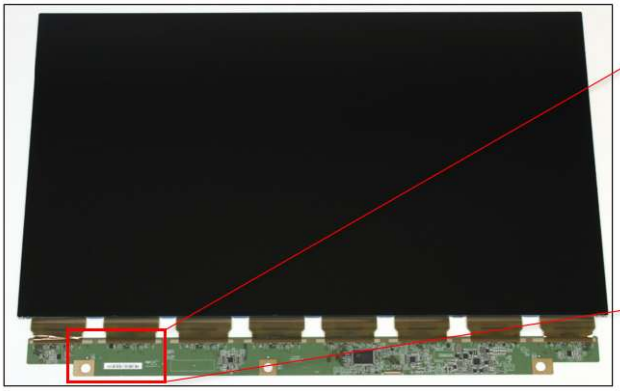

LG 27" 4K UHD IPS Display (Model No. 27SR73U), LCD Panel (front)

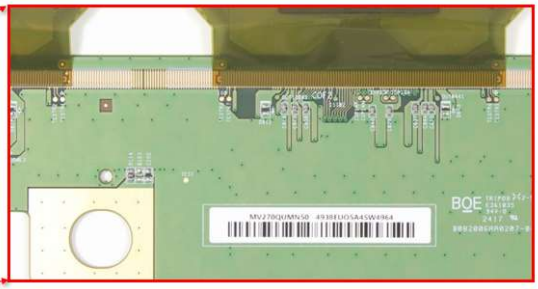

77. BOE LCD panels and modules, including, for example, the BOE LCD panel (part number MV270QUM-N50) in LG monitors, including, for example, the LG 27" 4K UHD IPS

display (model number 27SR73U), comprise a substrate. The BOE LCD panel (part number MV270QUM-N50) used in the LG 27” 4K UHD IPS display (model number 27SR73U) comprises an array substrate:

Array Substrate, back

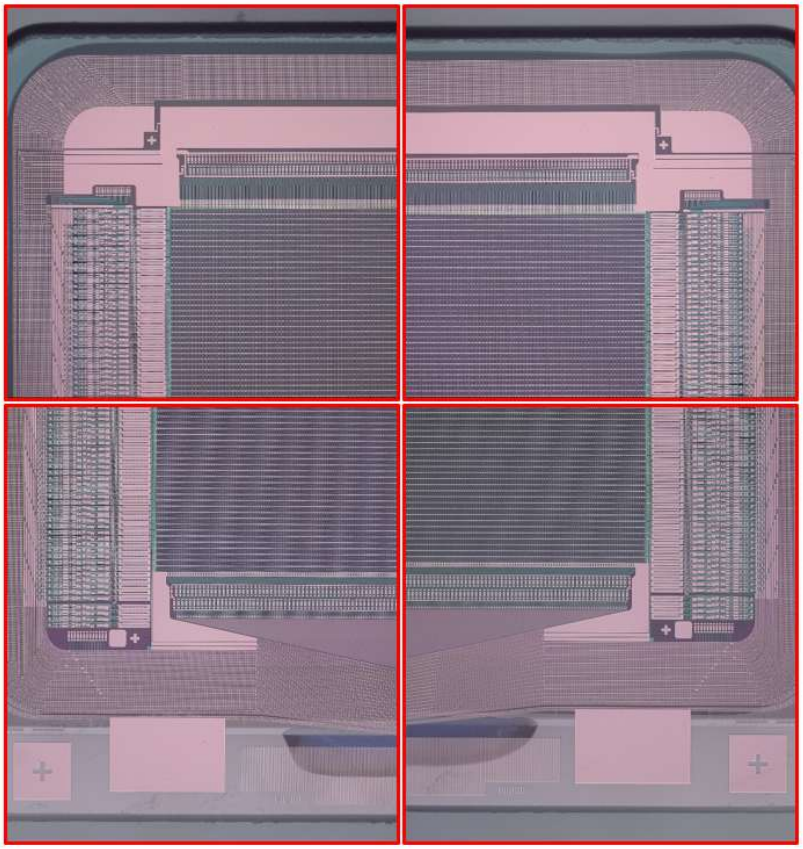

LCD Panel, back

78. BOE LCD panels and modules, including, for example, the BOE LCD panel (part number MV270QUM-N50) in LG monitors, including, for example, the LG 27” 4K UHD IPS display (model number 27SR73U), comprise data lines. The BOE LCD panel (part number MV270QUM-N50) used in the LG 27” 4K UHD IPS display (model number 27SR73U) comprises data lines that are located on the array substrate and run vertically from top to bottom::

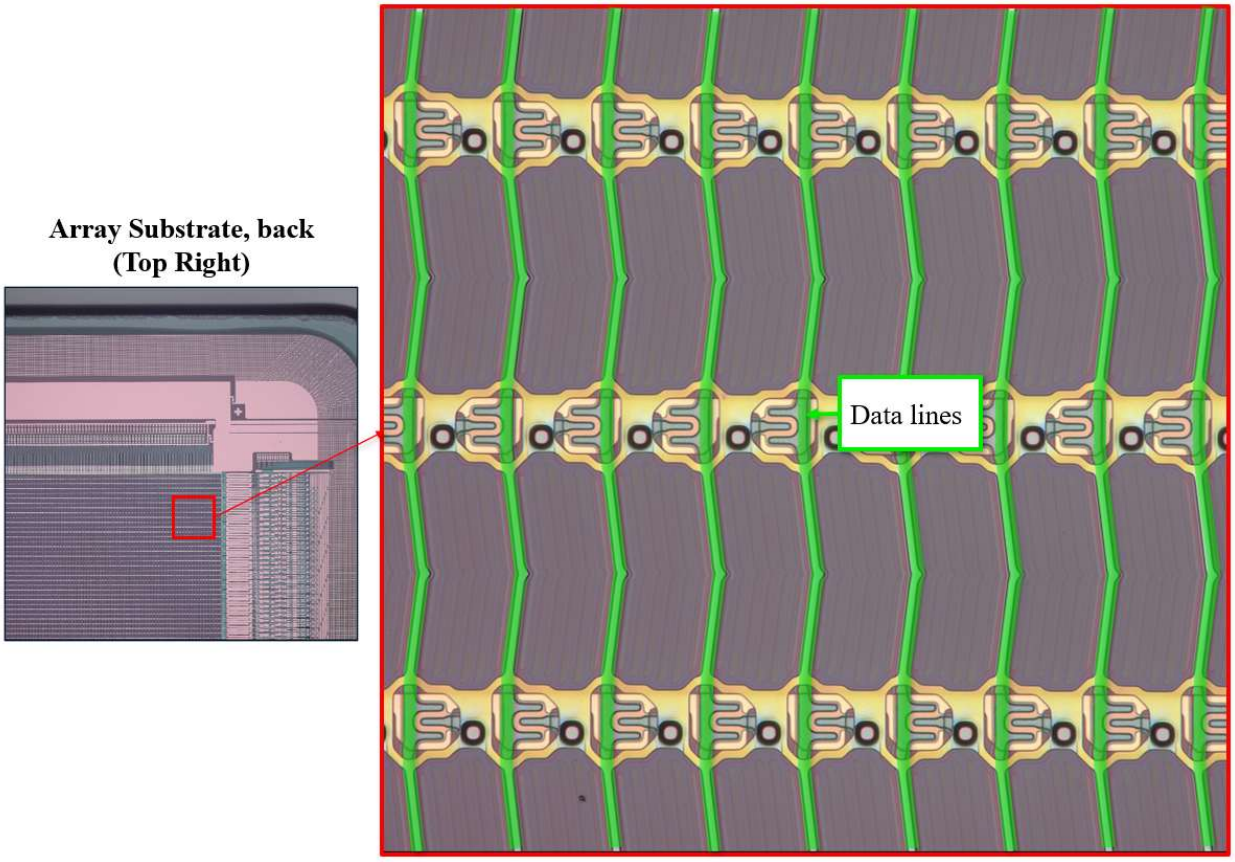

79. BOE LCD panels and modules, including, for example, the BOE LCD panel (part number MV270QUM-N50) in LG monitors, including, for example, the LG 27" 4K UHD IPS display (model number 27SR73U), comprise scanning lines intersecting the data lines. The BOE LCD panel (part number MV270QUM-N50) used in the LG 27" 4K UHD IPS display (model number 27SR73U) comprises scanning lines that are located on the array substrate running horizontally left to right and intersecting the data lines:

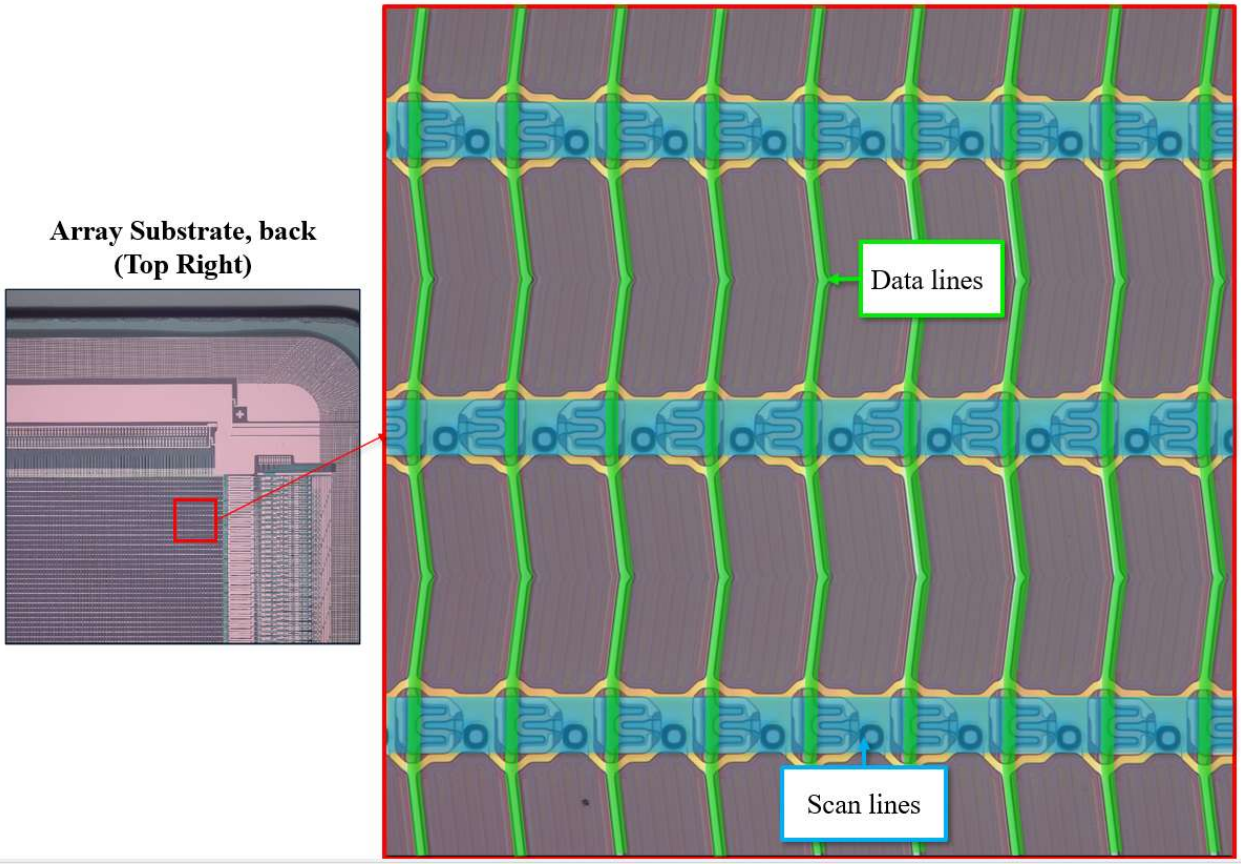

80. BOE LCD panels and modules, including, for example, the BOE LCD panel (part number MV270QUM-N50) in LG monitors, including, for example, the LG 27" 4K UHD IPS display (model number 27SR73U), comprise pixels disposed corresponding to intersections between the data lines and the scanning lines. The BOE LCD panel (part number MV270QUM-N50) used in the LG 27" 4K UHD IPS display (model number 27SR73U) comprises pixels that are disposed on the array substrate corresponding to intersections between the data lines and scanning lines:

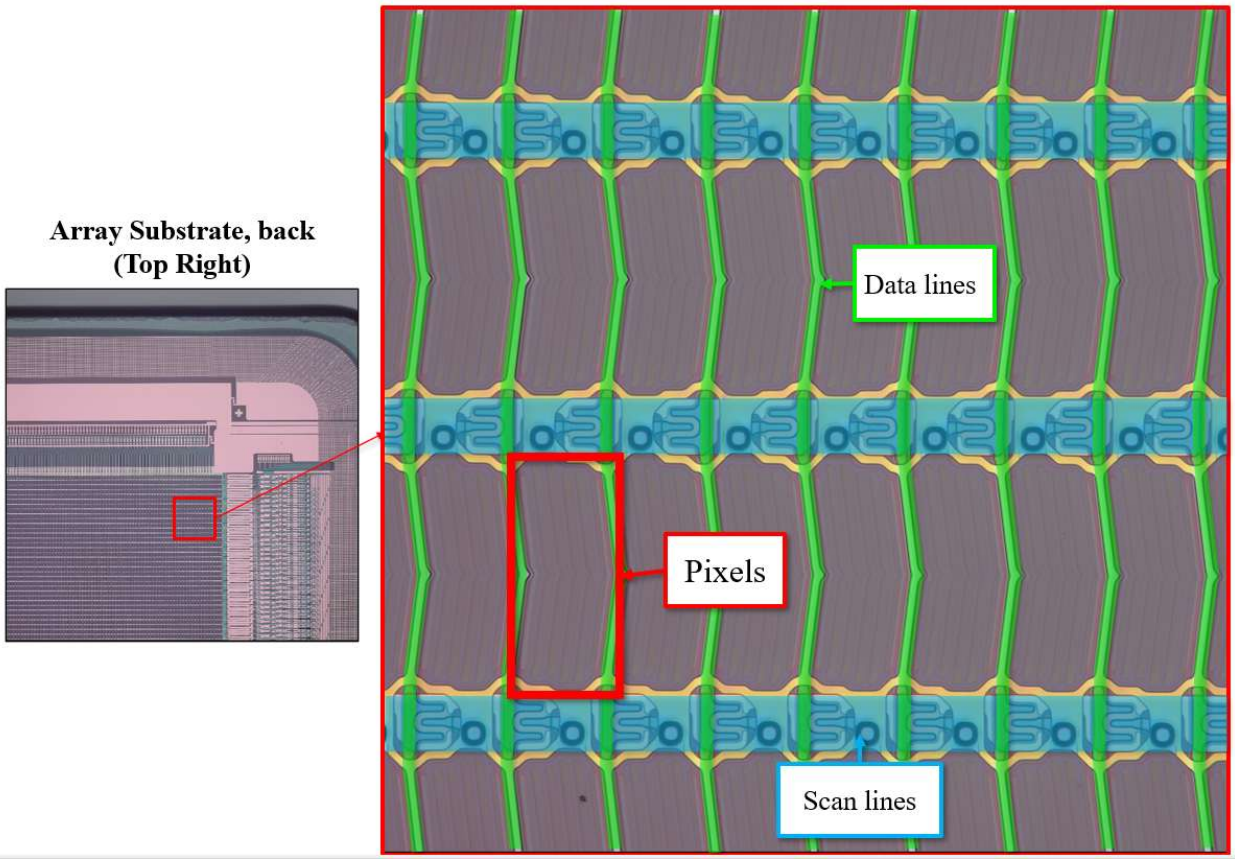

81. BOE LCD panels and modules, including, for example, the BOE LCD panel (part number MV270QUM-N50) in LG monitors, including, for example, the LG 27" 4K UHD IPS display (model number 27SR73U), comprise a clock signal input terminal supplied with a clock signal. The BOE LCD panel (part number MV270QUM-N50) used in the LG 27" 4K UHD IPS display (model number 27SR73U) comprises a clock signal input terminal implemented on the array substrate that is supplied with a clock signal:

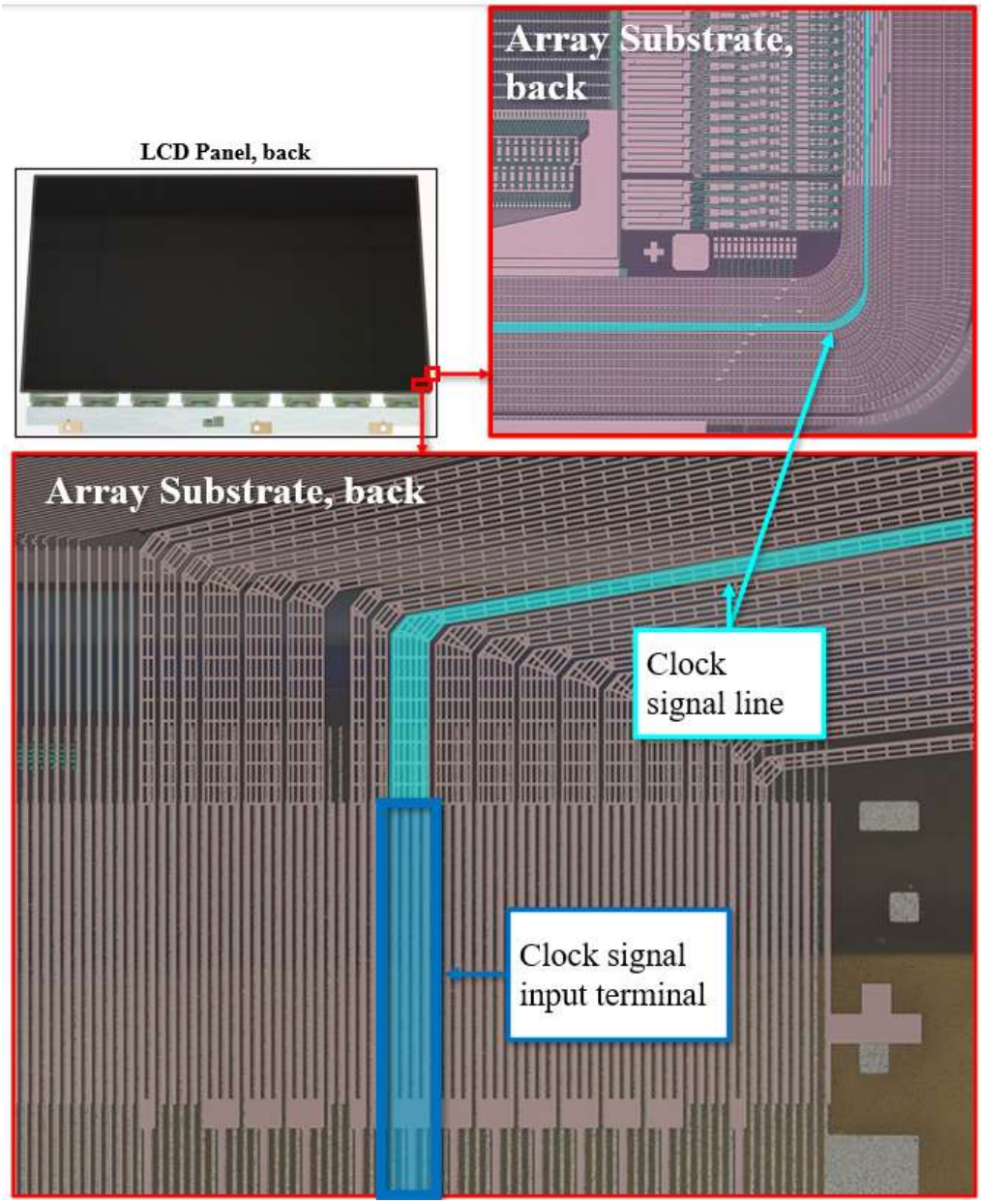

82. On information and belief, the clock signal line provides to the scanning line driving circuitry a signal that identifies a period for selecting individual scanning lines.

83. BOE LCD panels and modules, including, for example, the BOE LCD panel (part number MV270QUM-N50) in LG monitors, including, for example, the LG 27" 4K UHD IPS display (model number 27SR73U), comprise an image signal input terminal supplied with an image signal. The BOE LCD panel (part number MV270QUM-N50) used in the LG 27" 4K

UHD IPS display (model number 27SR73U) comprises an image signal input terminal implemented on the array substrate that is supplied with an image signal::

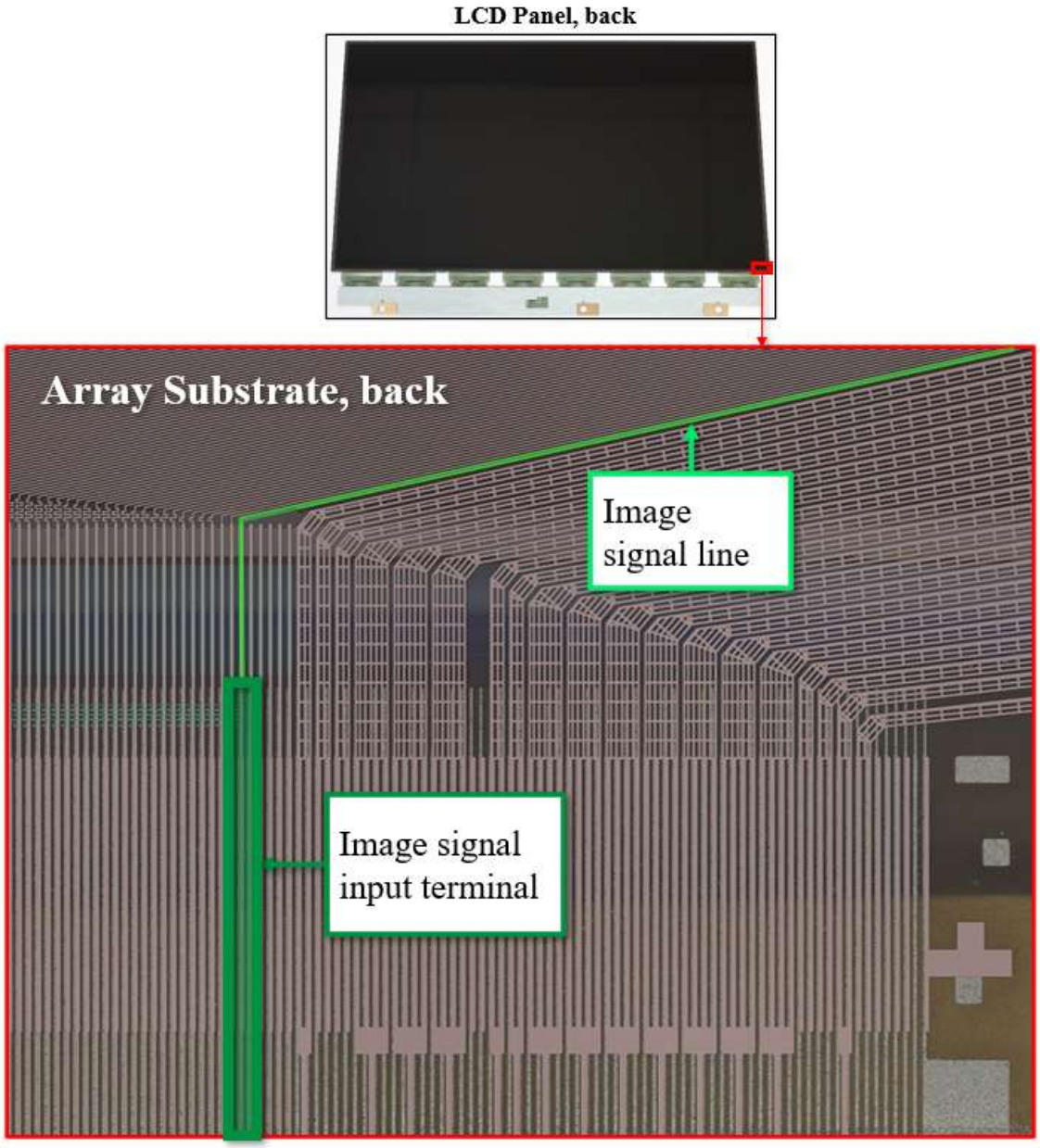

84. On information and belief, the image signal line provides to the pixel electrodes a voltage corresponding to grayscale via the data lines:

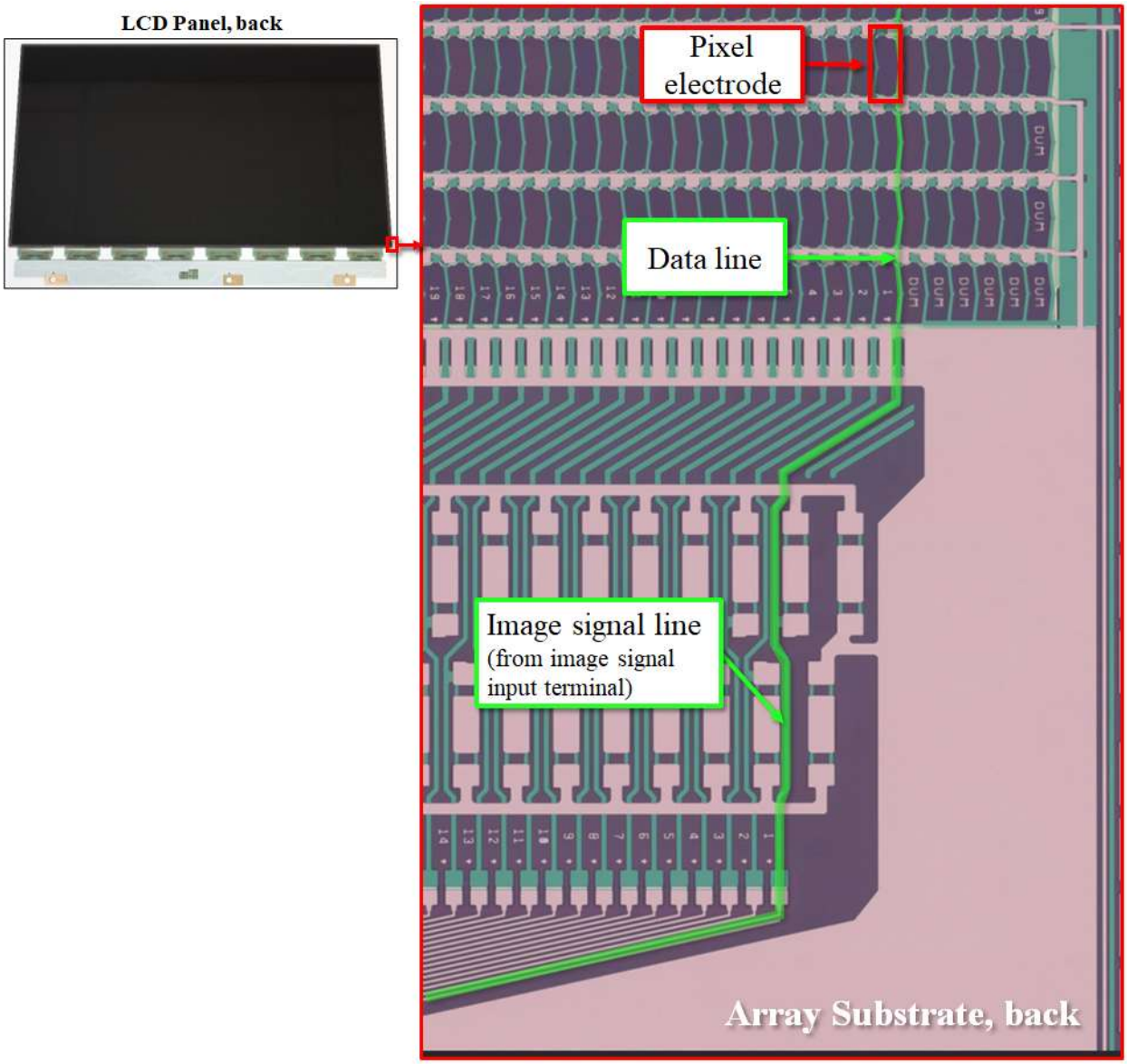

85. BOE LCD panels and modules, including, for example, the BOE LCD panel (part number MV270QUM-N50) in LG monitors, including, for example, the LG 27" 4K UHD IPS display (model number 27SR73U), comprise a scanning line drive circuit that outputs scanning signals to the scanning lines, image signals from the data lines supplied to the pixels are selected by the scanning signals. The BOE LCD panel (part number MV270QUM-N50) used in the LG 27" 4K UHD IPS display (model number 27SR73U) comprises a scanning line drive circuit that outputs scanning signals to the scanning lines, and pixels that are selected by the scanning

signals and supplied with image signals from the data lines:

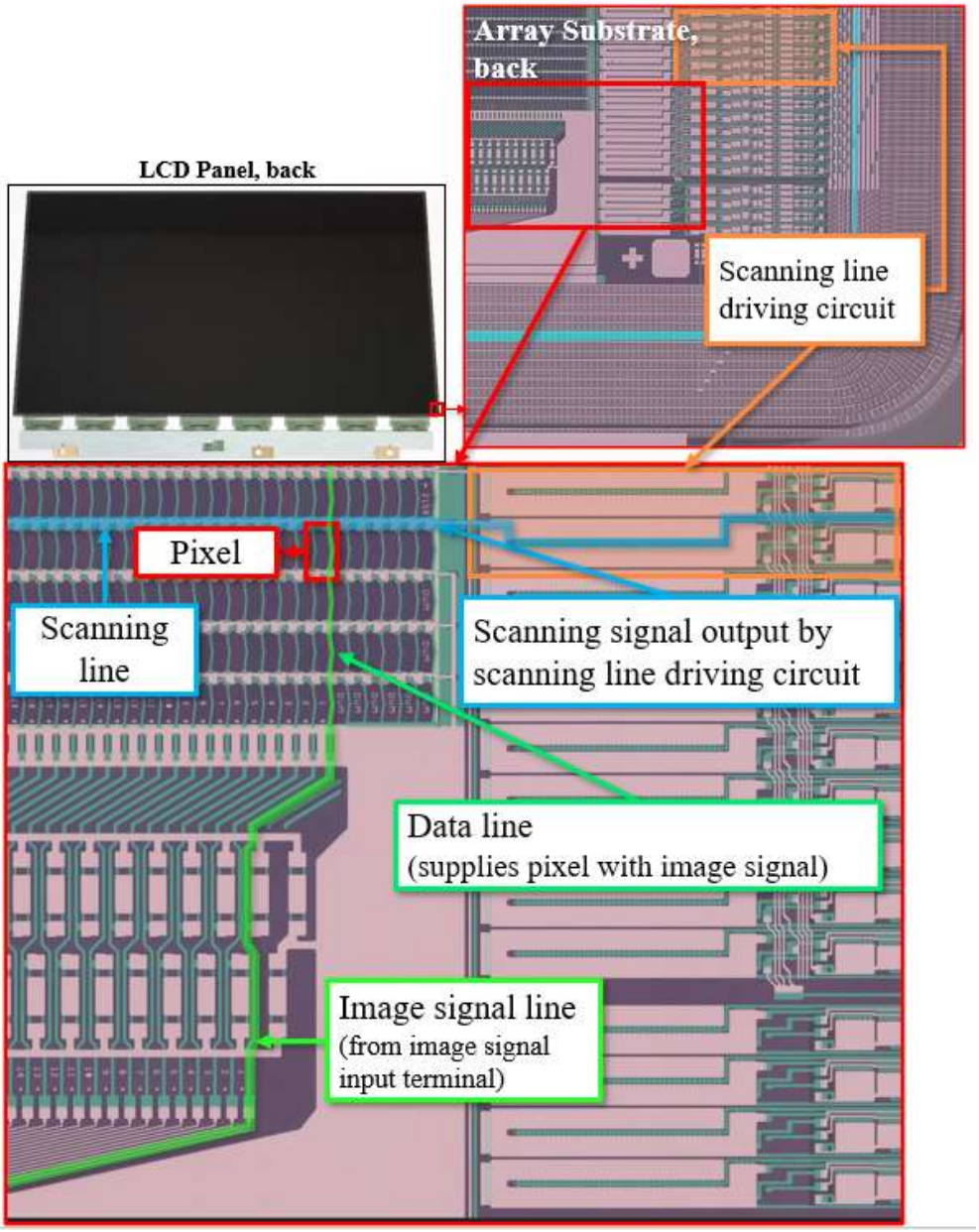

86. BOE LCD panels and modules, including, for example, the BOE LCD panel (part number MV270QUM-N50) in LG monitors, including, for example, the LG 27" 4K UHD IPS display (model number 27SR73U), are electro-optical panels wherein the data lines, the scanning lines, the pixels, the clock signal input terminal and the image signal input terminal are implemented on the substrate. *See supra* ¶¶ 77-85.

87. BOE LCD panels and modules, including, for example, the BOE LCD panel (part number MV270QUM-N50) in LG monitors, including, for example, the LG 27" 4K UHD IPS display (model number 27SR73U), comprise a mounting member that is distinct from and connected to the substrate. The BOE LCD panel (part number MV270QUM-N50) used in the LG 27" 4K UHD IPS display (model number 27SR73U) comprise a flexible printed circuit (FPC) mounting member that is distinct from the array substrate::

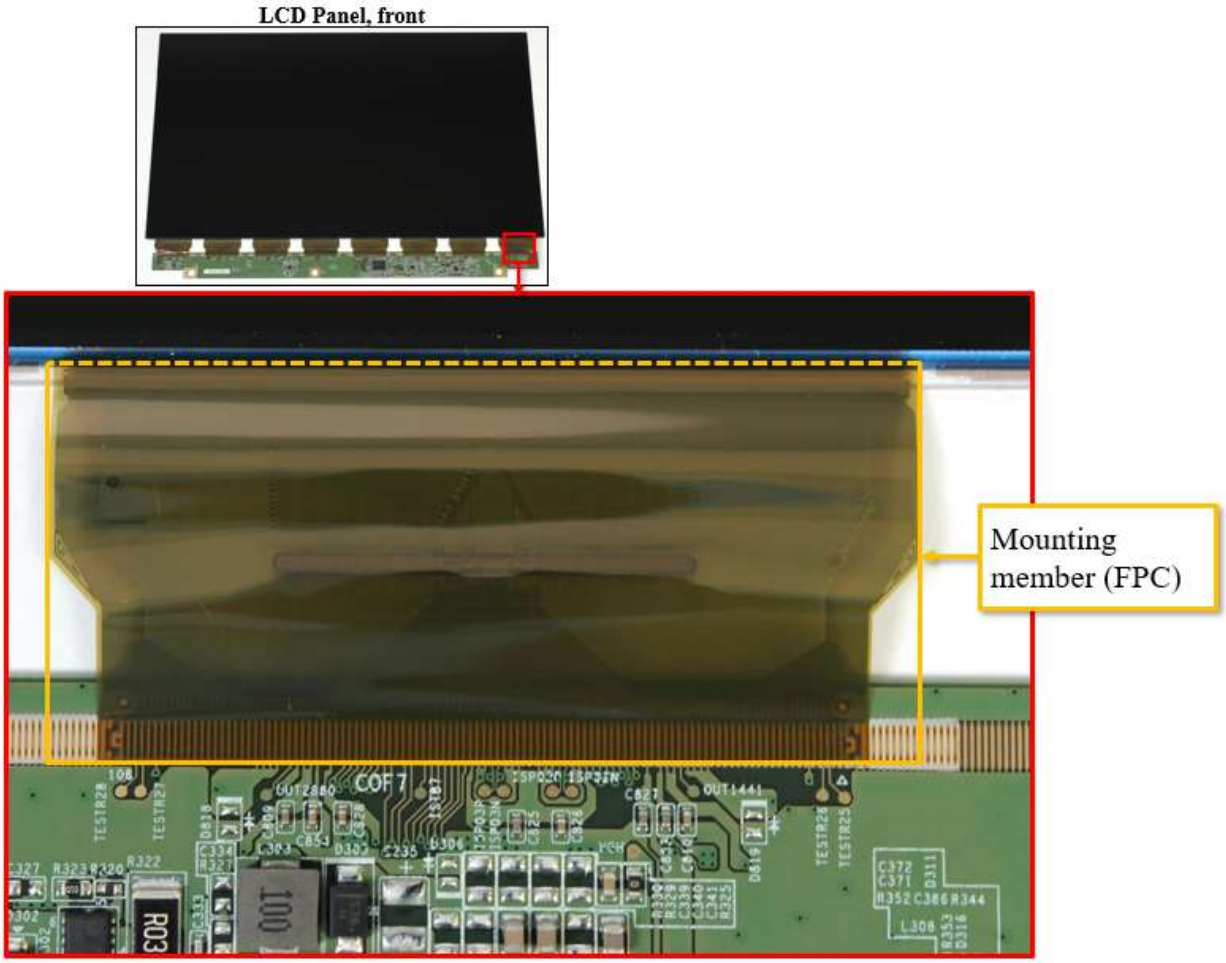

88. The FPC mounting member is distinct from and connected to the array substrate. As shown below (LCD Panel, front), the mounting member (FPC) is a distinct component that overlaps the front of the array substrate, and as shown below (Array substrate, back) the

mounting member (FPC) is connected to the array substrate::

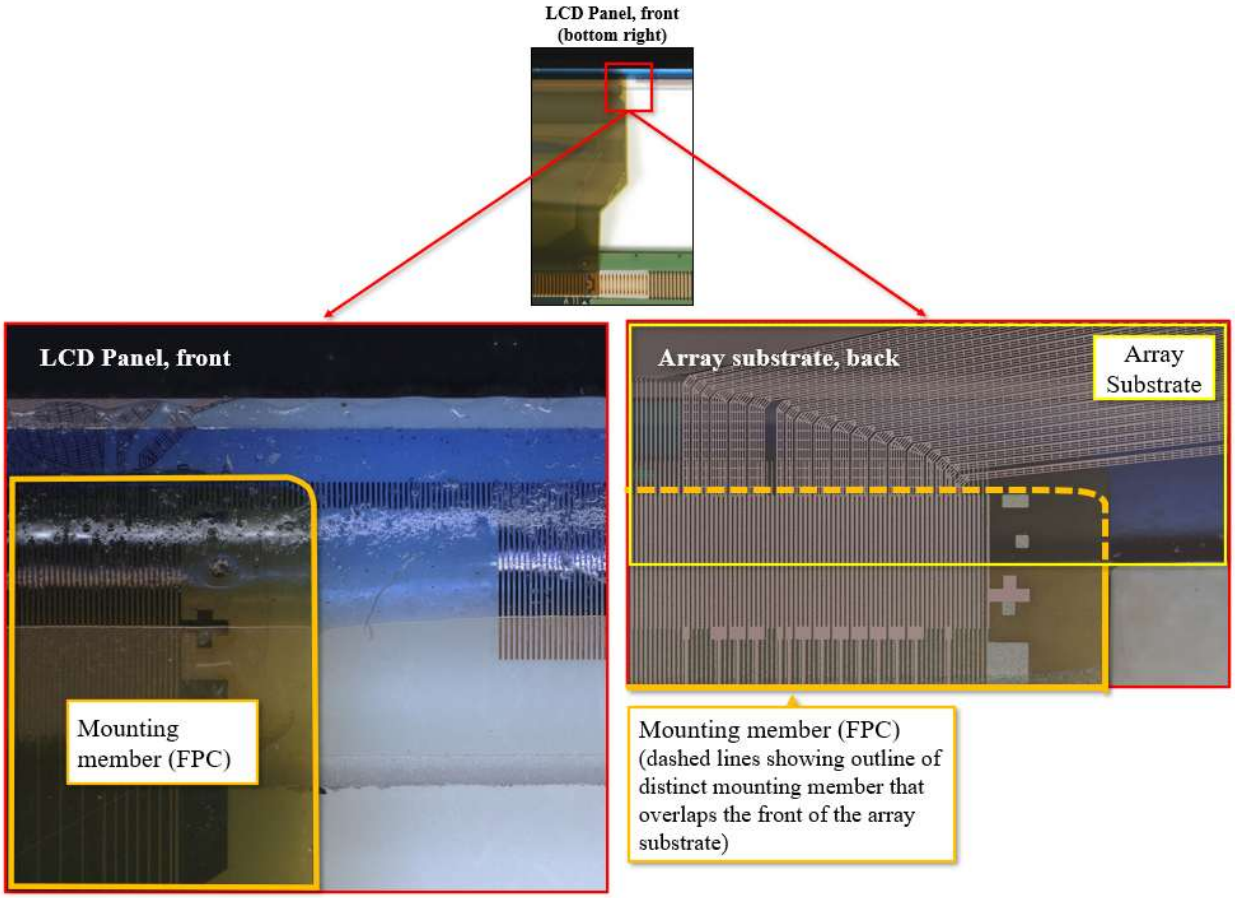

89. BOE LCD panels and modules, including, for example, the BOE LCD panel (part number MV270QUM-N50) in LG monitors, including, for example, the LG 27" 4K UHD IPS display (model number 27SR73U), comprise a mounting member comprising a first wiring that is connected to the clock signal input terminal. The BOE LCD panel (part number MV270QUM-N50) used in the LG 27" 4K UHD IPS display (model number 27SR73U) comprises a mounting member (FPC) that comprises a first wiring that is connected to the clock signal input terminal:

Array substrate, back

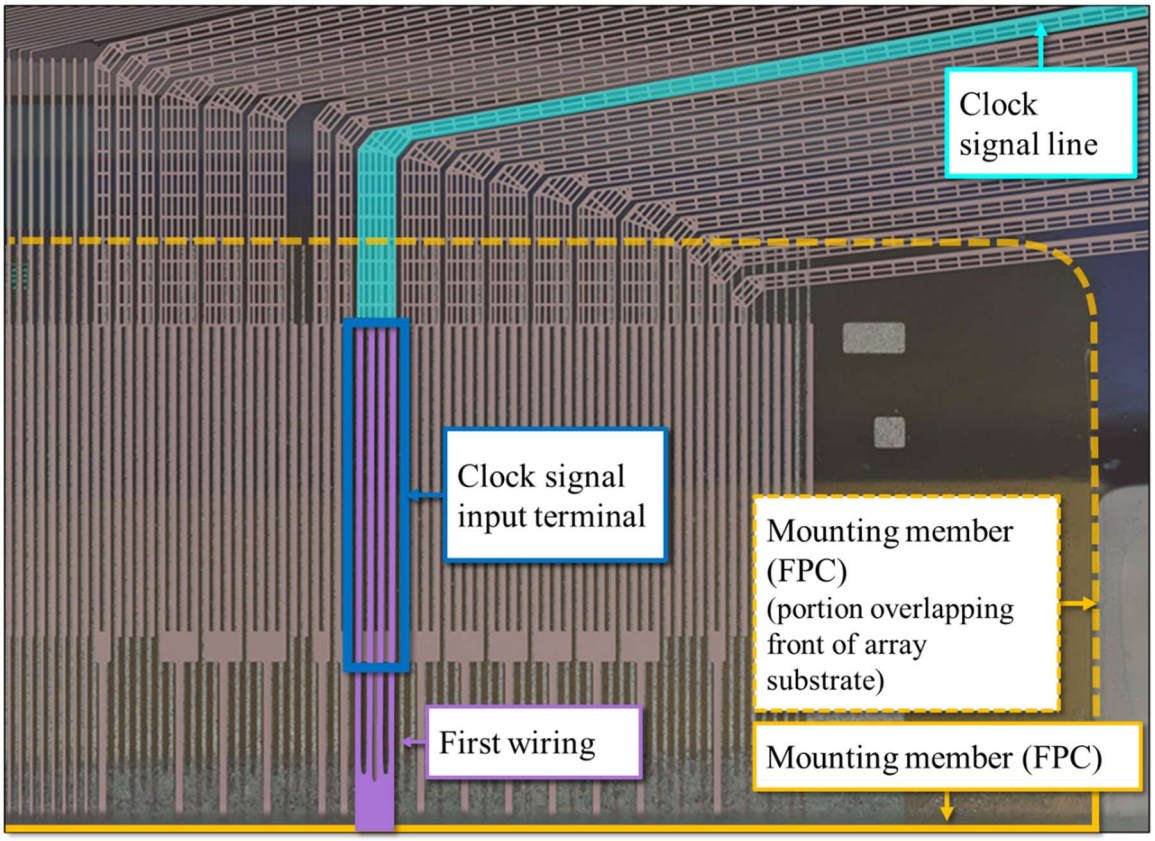

90. BOE LCD panels and modules, including, for example, the BOE LCD panel (part number MV270QUM-N50) in LG monitors, including, for example, the LG 27" 4K UHD IPS display (model number 27SR73U), comprise a mounting member comprising a second wiring that is connected to the image signal input terminal. The BOE LCD panel (part number MV270QUM-N50) used in the LG 27" 4K UHD IPS display (model number 27SR73U) comprises a mounting member (FPC) that comprises a second wiring that is connected to the image signal input terminal:

Array substrate, back

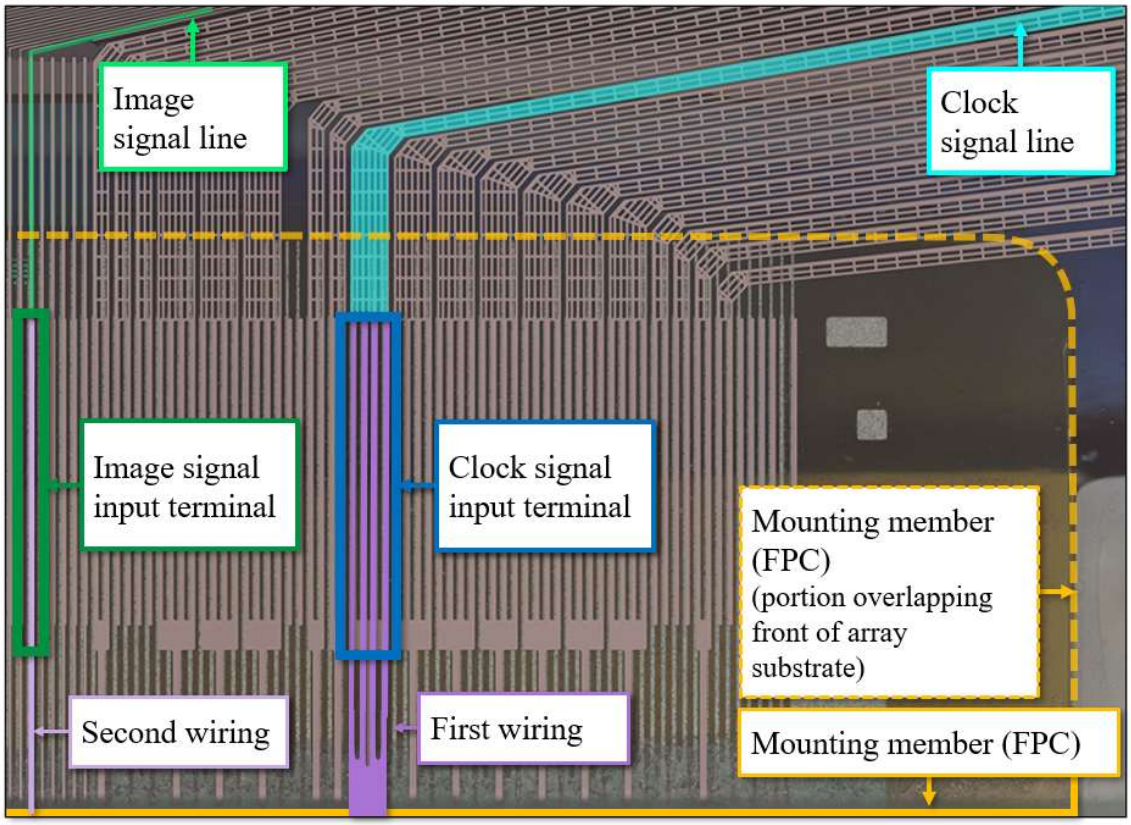

91. BOE LCD panels and modules, including, for example, the BOE LCD panel (part number MV270QUM-N50) in LG monitors, including, for example, the LG 27" 4K UHD IPS display (model number 27SR73U), comprise a mounting member wherein the clock signal input terminal overlaps the first wiring of the mounting member by a larger area than an area at which at least one of the image signal input terminals overlaps the second wiring of the mounting member. The BOE LCD panel (part number MV270QUM-N50) used in the LG 27" 4K UHD IPS display (model number 27SR73U) comprises a mounting member (FPC) wherein the clock signal input terminal overlaps the first wiring of the mounting member (FPC) by an area that is at least four times larger than an area at which the image signal input terminal overlaps the second wiring of the mounting member (FPC):

Input Terminals and Wirings, detail

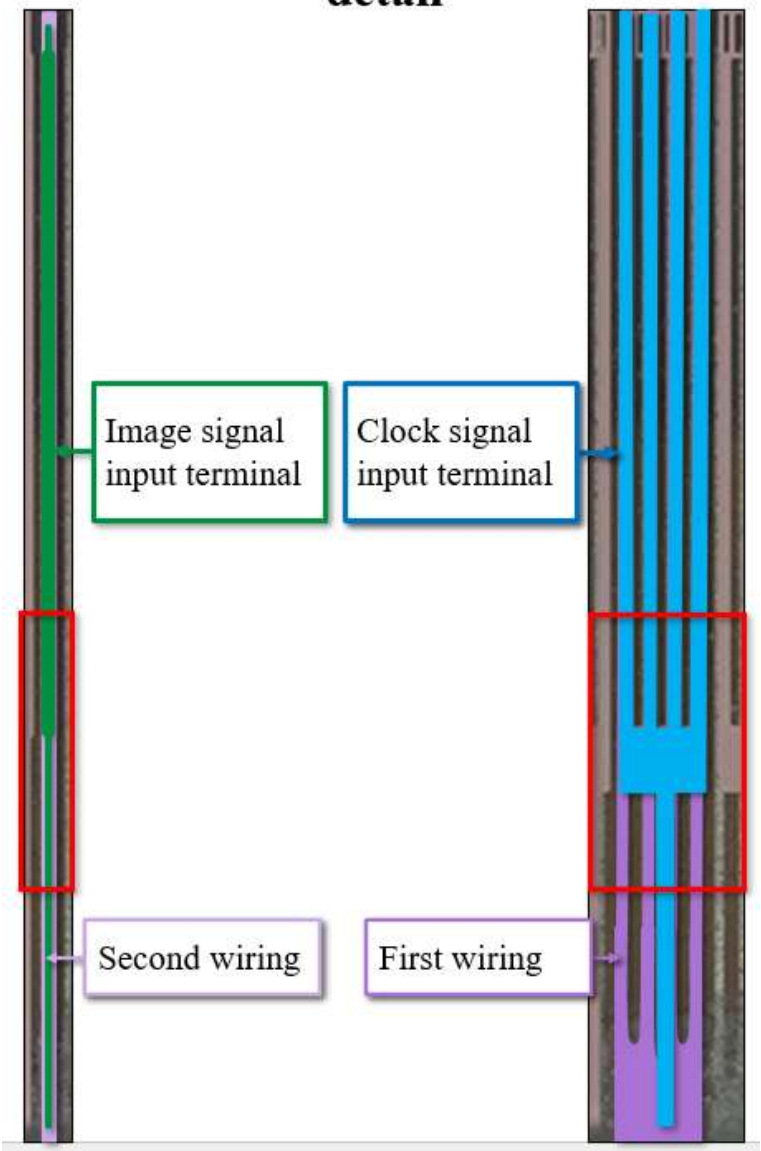

Input Terminals and Wirings, detail

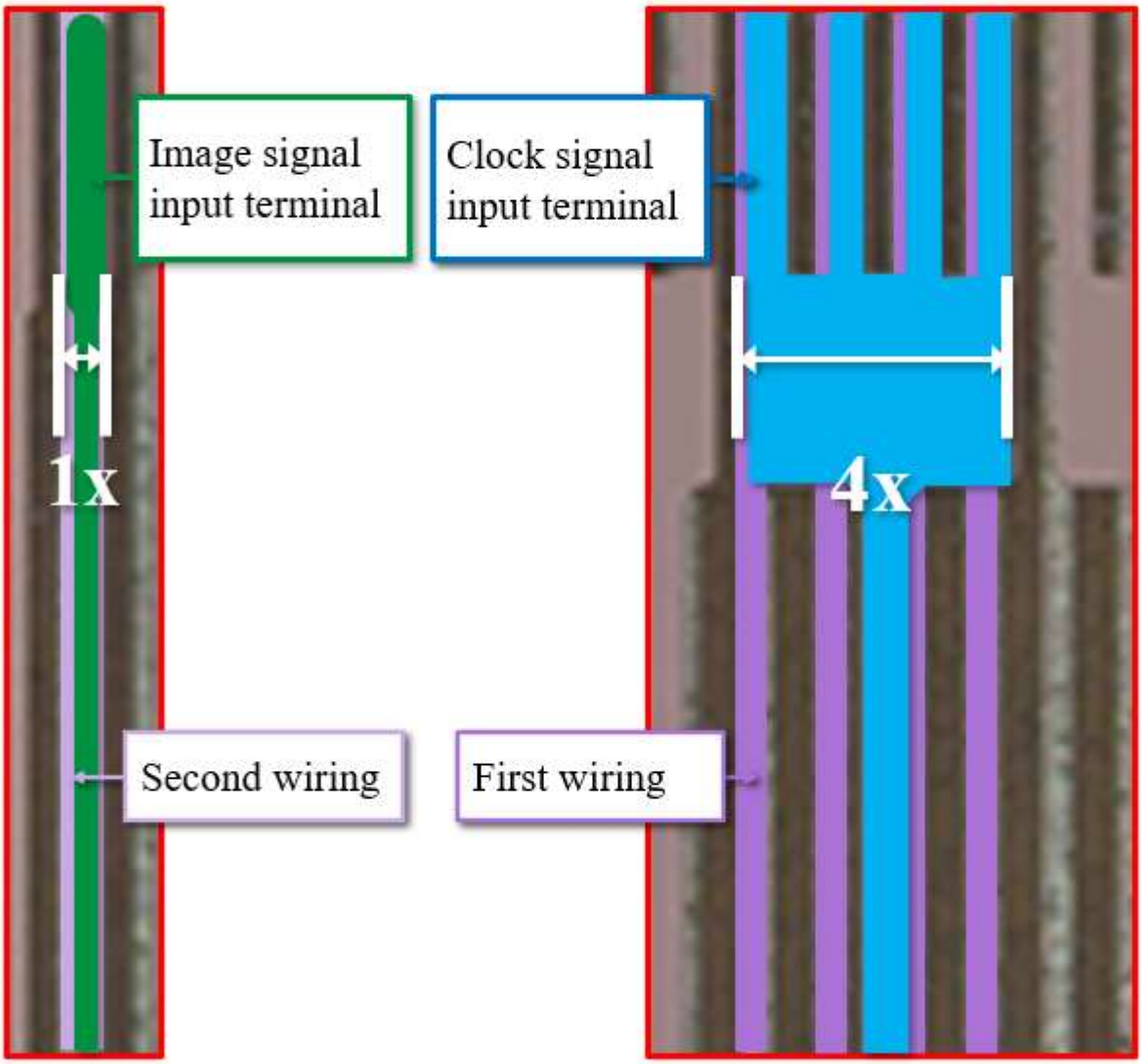

92. BOE and LG have indirectly infringed and continue to indirectly infringe the ’146 patent by actively inducing, in violation of 35 U.S.C. § 271(b), the direct infringement of the ’146 patent by others in the United States, the State of Texas, and the Eastern District of Texas.

93. BOE has induced, and continues to induce, through affirmative acts, its customers, including LG, and other third parties, including other importers, resellers, and end users in BOE’s supply chain, to directly infringe the ’146 patent by making, using, offering to

sell, selling within the United States, and/or importing into the United States, products incorporating a BOE Accused Instrumentality that infringes the ’146 patent.

94. LG has induced, and continues to induce, through affirmative acts, its customers and other third parties, including other importers, resellers, and end users in LG’s supply chain, to directly infringe the ’146 patent by using, offering to sell, selling within the United States, and/or importing into the United States, LG Accused Instrumentalities that infringe the ’146 patent.

95. On information and belief, BOE and LG actively promoted the BOE Accused Instrumentalities and the LG Accused Instrumentalities, respectively, for the U.S. market.

96. BOE knew that its customers, including LG, would offer to sell and/or sell products incorporating the BOE Accused Instrumentalities in the United States or cause those products to be sold in the United States, and BOE specifically intended its customers to purchase BOE Accused Instrumentalities and offer to sell and/or sell products incorporating the BOE Accused Instrumentalities in the United States or cause those products to be sold in the United States. BOE’s direct and indirect purchasers directly infringe the ’146 patent by importing the BOE Accused Instrumentalities into the United States, selling the BOE Accused Instrumentalities in the United States, offering to sell the BOE Accused Instrumentalities in the United States, and/or using the BOE Accused Instrumentalities in the United States.

97. LG knew that its customers would offer to sell and/or sell infringing LG Accused Instrumentalities in the United States or cause LG Accused Instrumentalities to be sold in the United States, and LG specifically intended its customers to purchase LG Accused Instrumentalities and offer to sell and/or sell the LG Accused Instrumentalities in the United States or cause LG Accused Instrumentalities to be sold in the United States. LG’s customers

directly infringe the ’146 patent by importing the LG Accused Instrumentalities into the United States, selling the LG Accused Instrumentalities in the United States, offering to sell the LG Accused Instrumentalities in the United States, and/or using the LG Accused Instrumentalities in the United States.

98. BOE has induced others’ direct infringement despite actual notice that the BOE Accused Instrumentalities infringe the ’146 patent. As of at least January 2, 2020, BOE knew that the induced conduct would constitute infringement—and intended that infringement at the time of committing the aforementioned affirmative acts, such that the acts and conduct have been and continue to be committed with the specific intent to induce infringement—or deliberately avoided learning of the infringing circumstances at the time of committing these acts so as to be willfully blind to the infringement that was induced.

99. LG has induced others’ direct infringement despite actual notice that the LG Accused Instrumentalities infringe the ’146 patent. As of at least the date of this complaint, LG knew that the induced conduct would constitute infringement—and intended that infringement at the time of committing the aforementioned affirmative acts, such that the acts and conduct have been and continue to be committed with the specific intent to induce infringement—or deliberately avoided learning of the infringing circumstances at the time of committing these acts so as to be willfully blind to the infringement that was induced.

100. BOE’s and LG’s direct and indirect infringement of the ’146 patent is ongoing.

101. The above-described acts of infringement have caused and continue to cause injury and damage to Plaintiffs.

102. BOE’s infringement has been and continues to be willful. LG’s ongoing infringement will be willful.

103. Plaintiffs are entitled to recover damages sustained as a result of BOE's and LG's willful infringement in an amount subject to proof at trial, but in no event less than a reasonable royalty.

COUNT II: INFRINGEMENT OF U.S. PATENT NO. 8,319,512

104. Pursuant to 35 U.S.C. § 282, the '512 patent is presumed valid.

105. BOE and LG have directly infringed and continue to directly infringe one or more claims of the '512 patent, in violation of 35 U.S.C. § 271(a), by making, using, offering to sell, selling, and/or importing the BOE Accused Instrumentalities (BOE) and the LG Accused Instrumentalities (LG).

106. The BOE Accused Instrumentalities and the LG Accused Instrumentalities (which incorporate a BOE Accused Instrumentality) comprise the flexible substrate of at least claim 1 of the '512 patent.

107. The following paragraphs describe how the BOE Accused Instrumentalities and thus the LG Accused Instrumentalities practice claim 1 of the '512 patent, using the exemplary BOE LCD panel (part number MV270QUM-N50) in the LG 27" 4K UHD IPS display (model number 27SR73U). Plaintiffs' allegations of infringement are not limited to claim 1 or the exemplary product, and Plaintiffs will identify and disclose additional infringement through discovery and in infringement contentions.

108. On information and belief, the LG 27" 4K UHD IPS display (model number 27SR73U) is exemplary of other infringing LG products, including without limitation the LG 55" 4K UHD TV (model number 55UT7570PUB), which incorporates a substantially similar BOE LCD panel, and other monitors and TVs incorporating substantially similar BOE LCD panels and/or modules. The 27" display and 55" TV and substantially similar products

incorporating substantially similar BOE LCD panels and/or modules each practice the asserted claims of the ’512 patent in the same manner, and infringement by one representative product is indicative of infringement by the others.

109. The LCD panel in the LG 27” 4K UHD IPS display (model number 27SR73U) is a BOE LCD panel. BOE LCD panels and modules, including, for example, the BOE LCD panel (part number MV270QUM-N50) in LG monitors, including, for example, the LG 27” 4K UHD IPS display (model number 27SR73U), include a flexible substrate.

LG 27” 4K UHD IPS Display (Model No. 27SR73U), Front

LG 27” 4K UHD IPS Display (Model No. 27SR73U), Back

LG 27" 4K UHD IPS Display (Model No. 27SR73U), Back

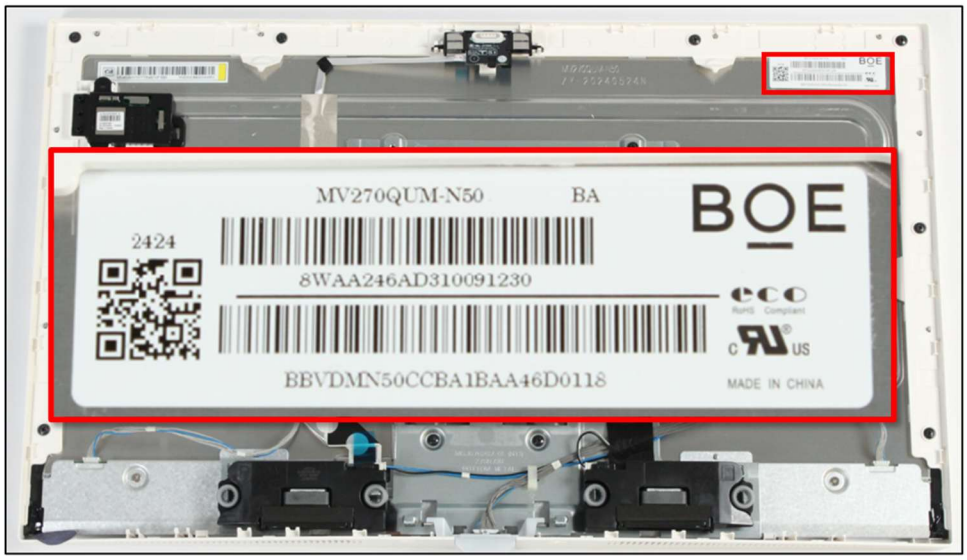

LG 27" 4K UHD IPS Display (Model No. 27SR73U), LCD Panel (front)

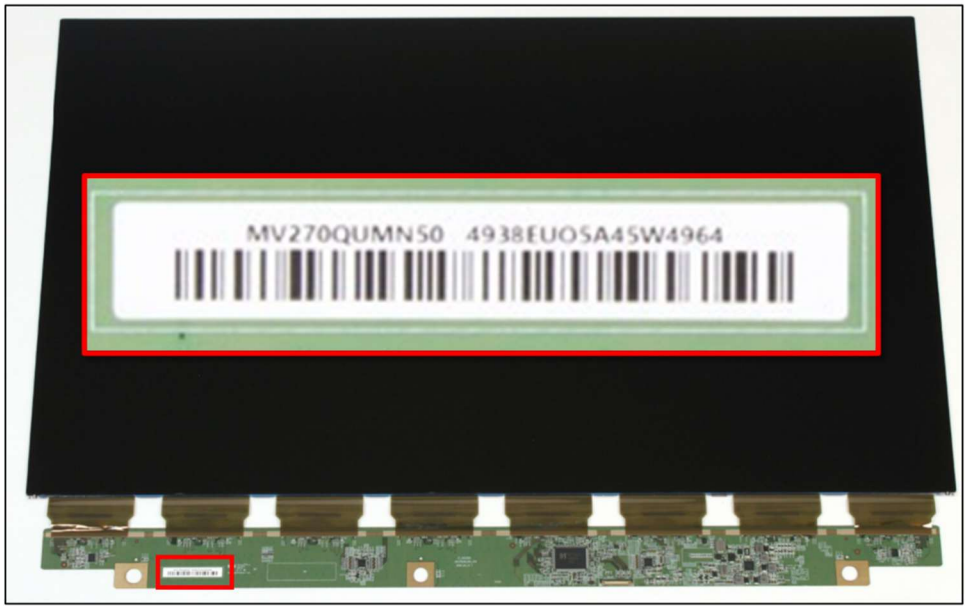

LCD Panel, front

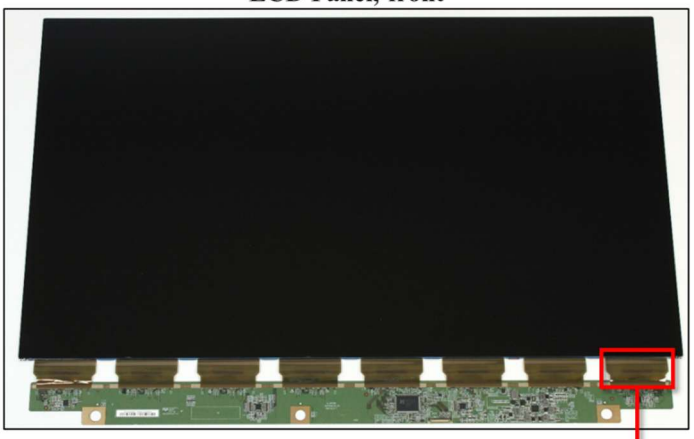

Flexible Substrate, front

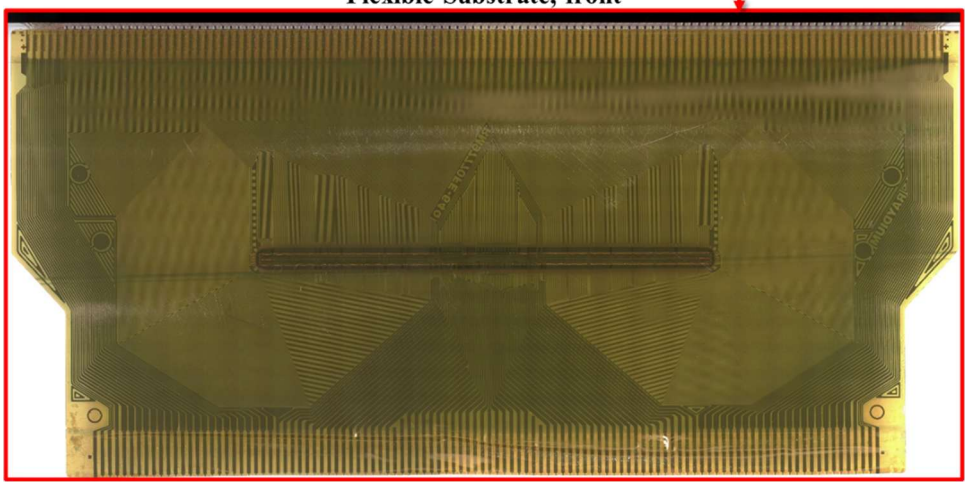

110. BOE LCD panels and modules, including, for example, the BOE LCD panel (part number MV270QUM-N50) in LG monitors, including, for example, the LG 27" 4K UHD IPS display (model number 27SR73U), include a flexible substrate comprising a substrate body:

Flexible Substrate, Body

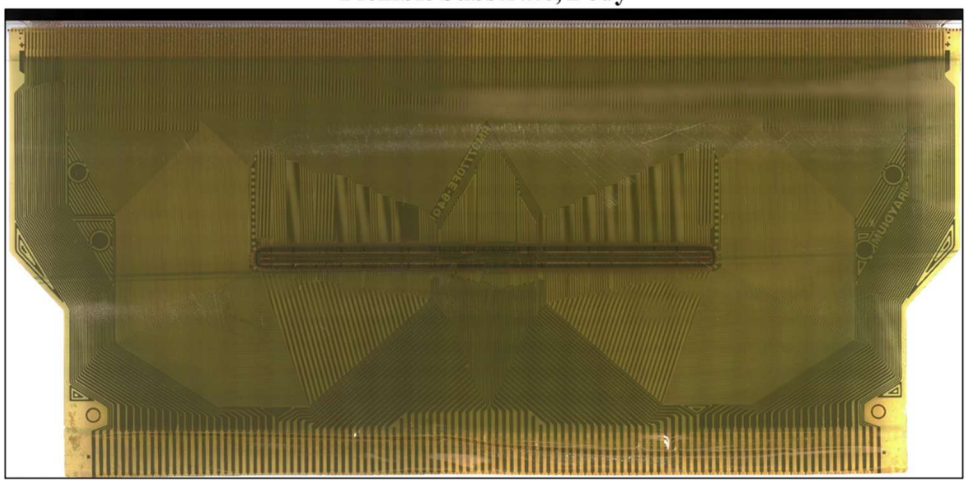

111. BOE LCD panels and modules, including, for example, the BOE LCD panel (part number MV270QUM-N50) in LG monitors, including, for example, the LG 27" 4K UHD IPS display (model number 27SR73U), include a flexible substrate comprising a plurality of lines that are arranged on the substrate body:

Flexible Substrate, Body

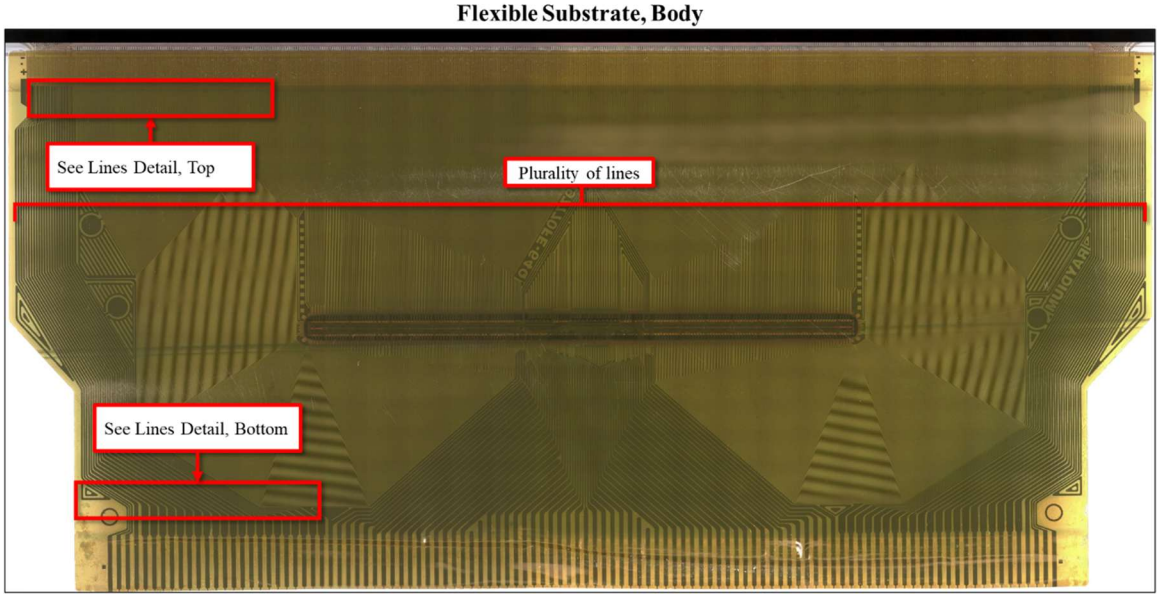

Lines Detail, Top

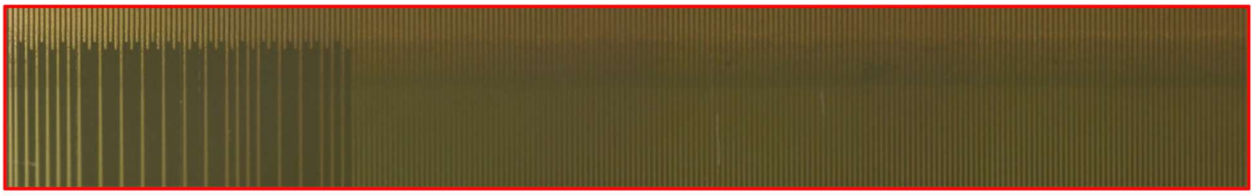

Lines Detail, Bottom

112. BOE LCD panels and modules, including, for example, the BOE LCD panel (part number MV270QUM-N50) in LG monitors, including, for example, the LG 27" 4K UHD IPS display (model number 27SR73U), include a flexible substrate comprising a plurality of connection terminals that are arranged on an end portion of the substrate body and electrically connected to the respective lines:

Flexible Substrate, Body

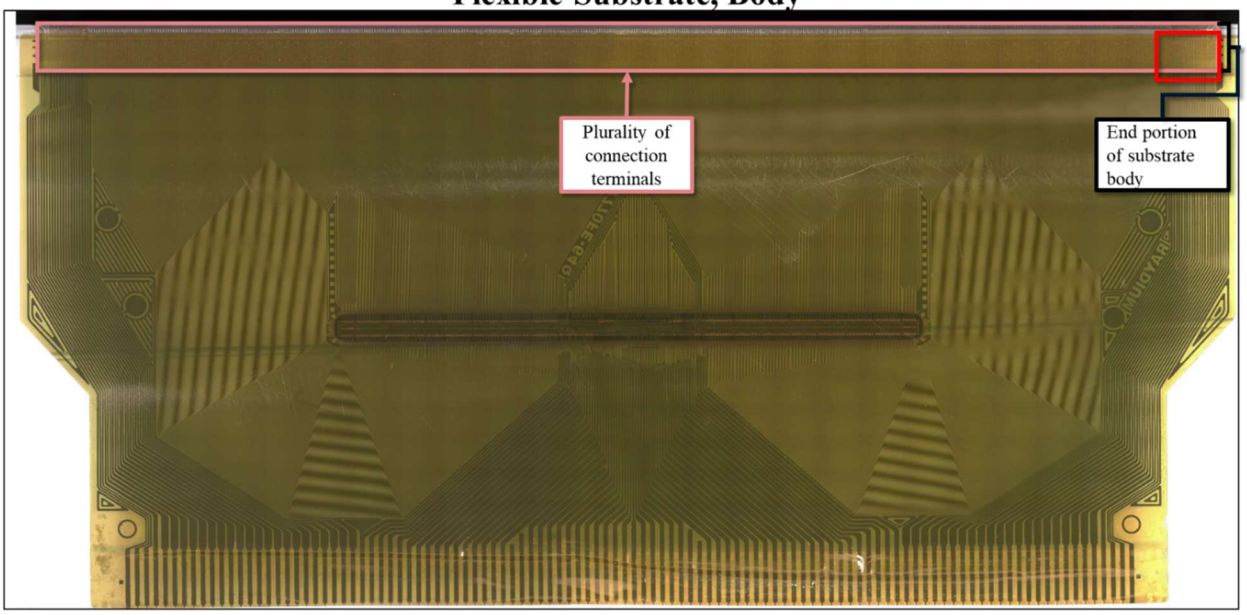

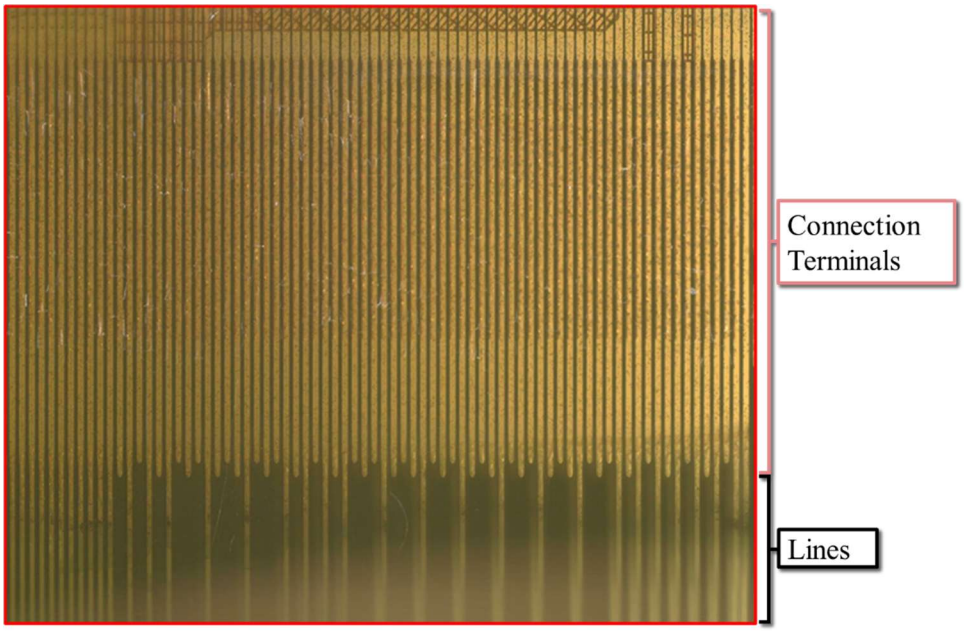

113. BOE LCD panels and modules, including, for example, the BOE LCD panel (part number MV270QUM-N50) in LG monitors, including, for example, the LG 27" 4K UHD IPS display (model number 27SR73U), include a flexible substrate comprising an integrated circuit that is arranged on the substrate body and electrically connected to at least one of the lines:

Flexible Substrate, Body

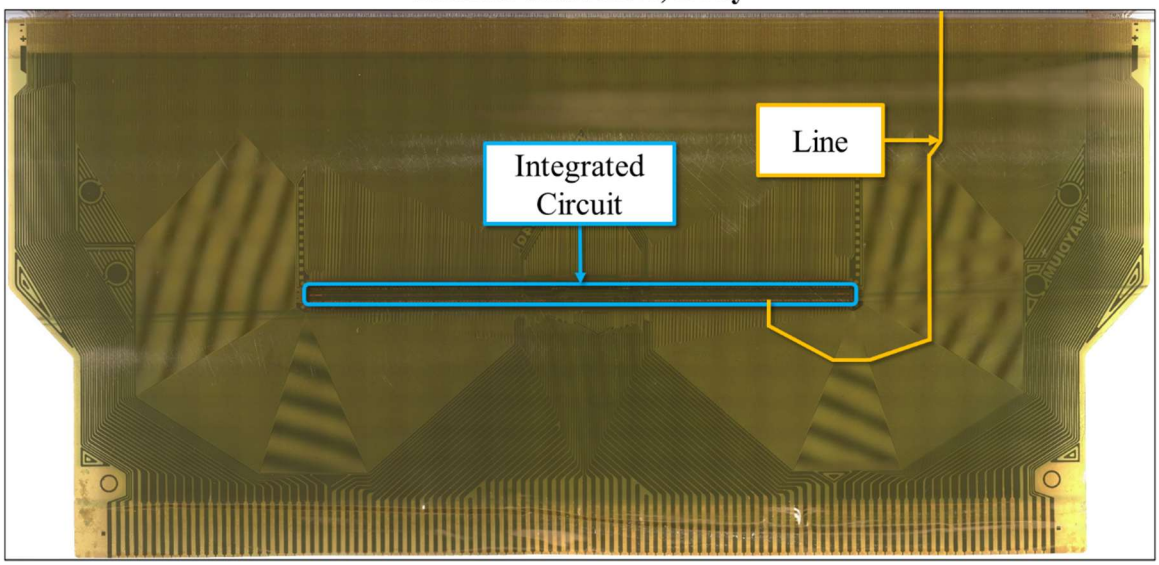

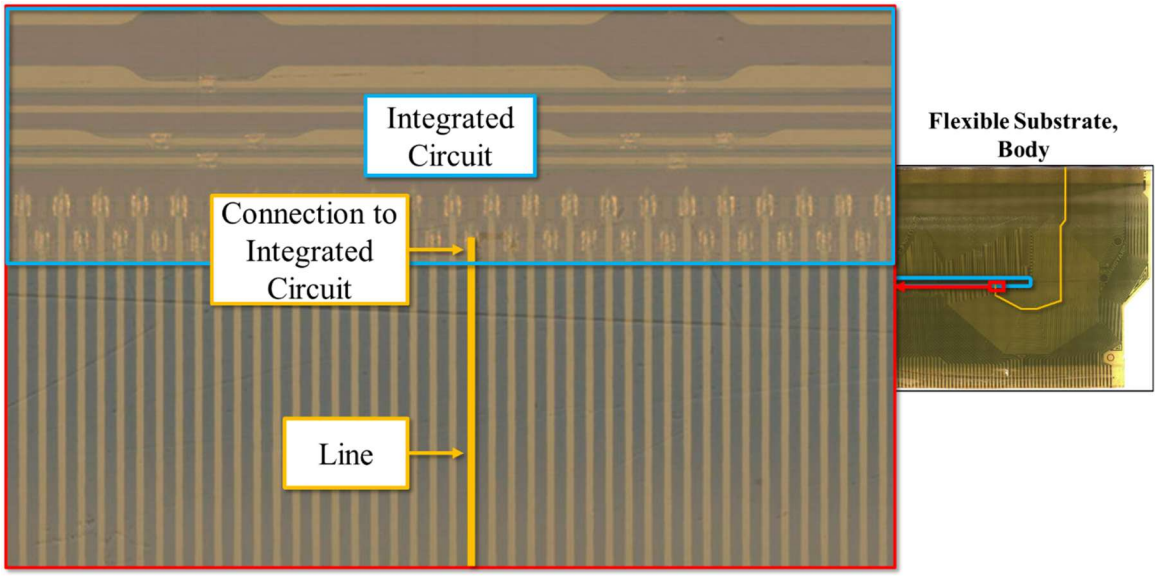

114. BOE LCD panels and modules, including, for example, the BOE LCD panel (part number MV270QUM-N50) in LG monitors, including, for example, the LG 27" 4K UHD IPS display (model number 27SR73U), include a flexible substrate comprising an inspection electrode that is arranged on the substrate body and electrically connected to the integrated circuit and capable of outputting a signal processed in the integrated circuit. The flexible substrate body includes four inspection electrodes arranged on the substrate body:

Flexible Substrate, Body

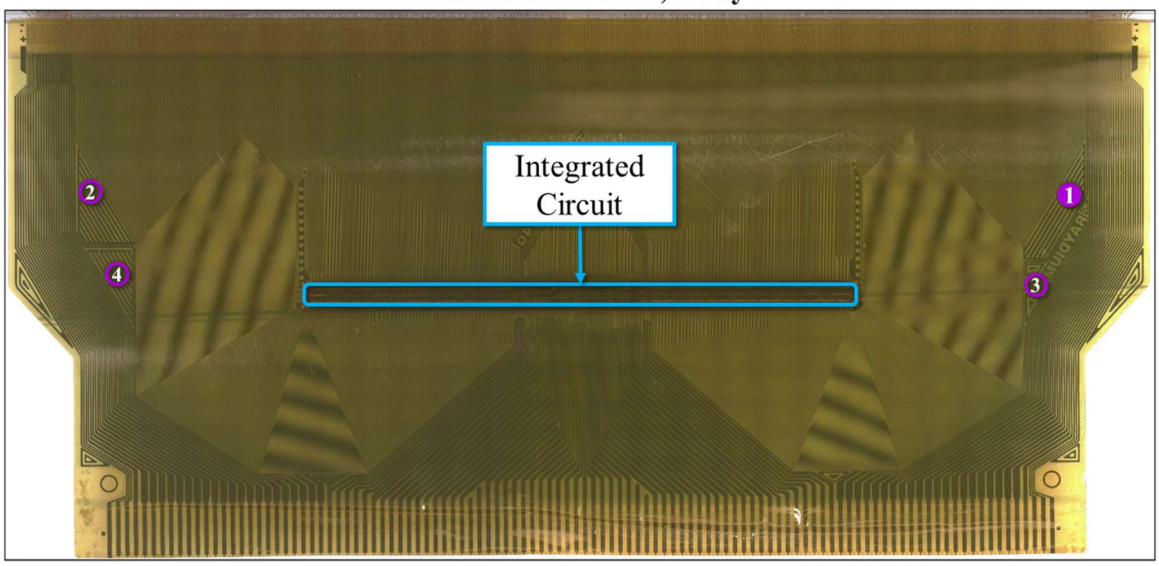

115. Inspection electrode #1 is electrically connected to the IC:

Flexible Substrate, Body

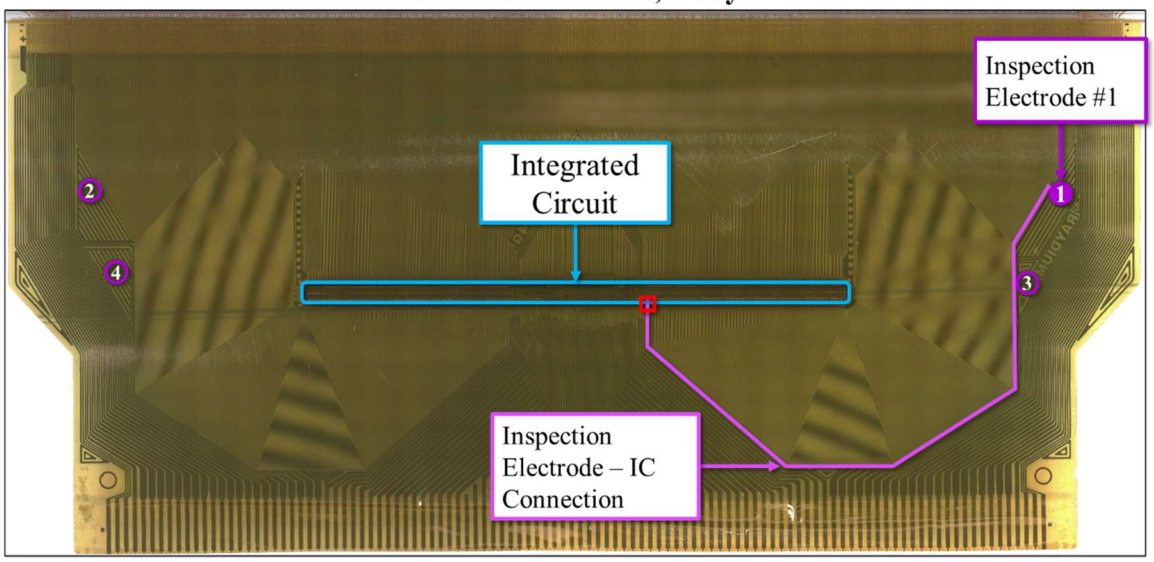

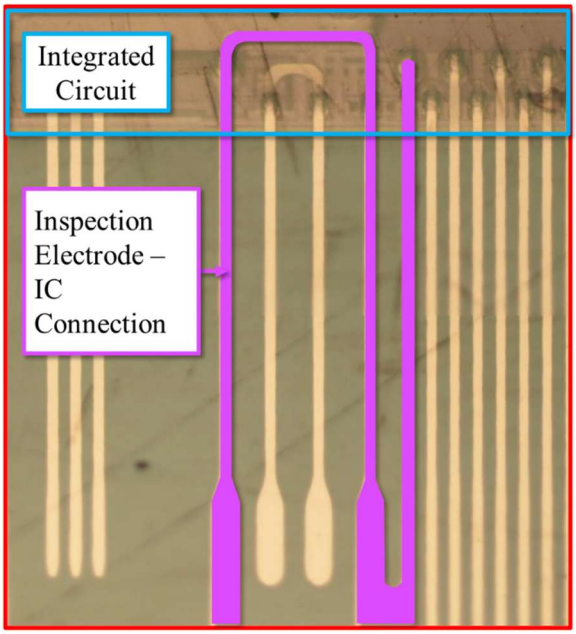

116. Inspection electrode #1 is capable of outputting a signal processed in the IC:

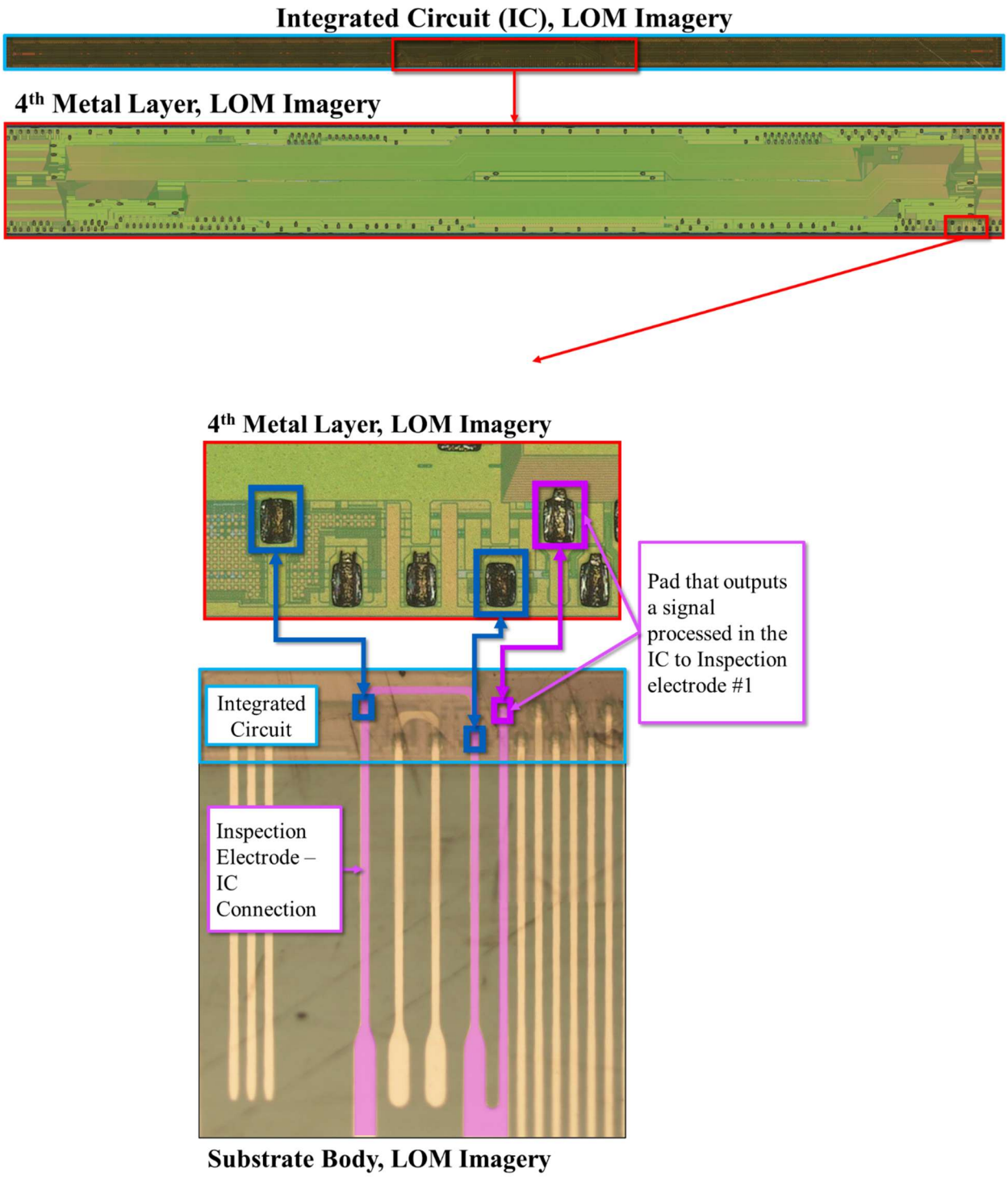
Integrated Circuit (IC), LOM Imagery
4th Metal Layer, LOM Imagery
4th Metal Layer, LOM Imagery
Pad that outputs a signal processed in the IC to Inspection electrode #1
Integrated Circuit
Inspection Electrode – IC Connection
Substrate Body, LOM Imagery

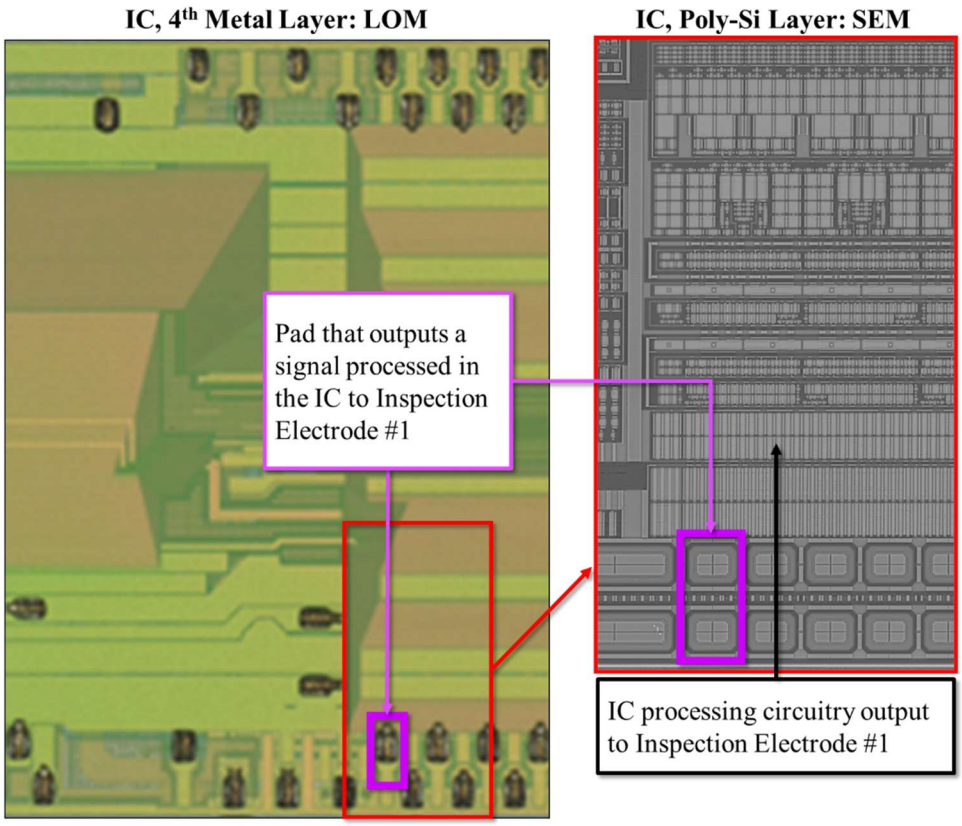

117. Inspection electrode #1 is capable of outputting a signal processed in the IC, for example, the signals processed by the High and Low side buffers within the IC:

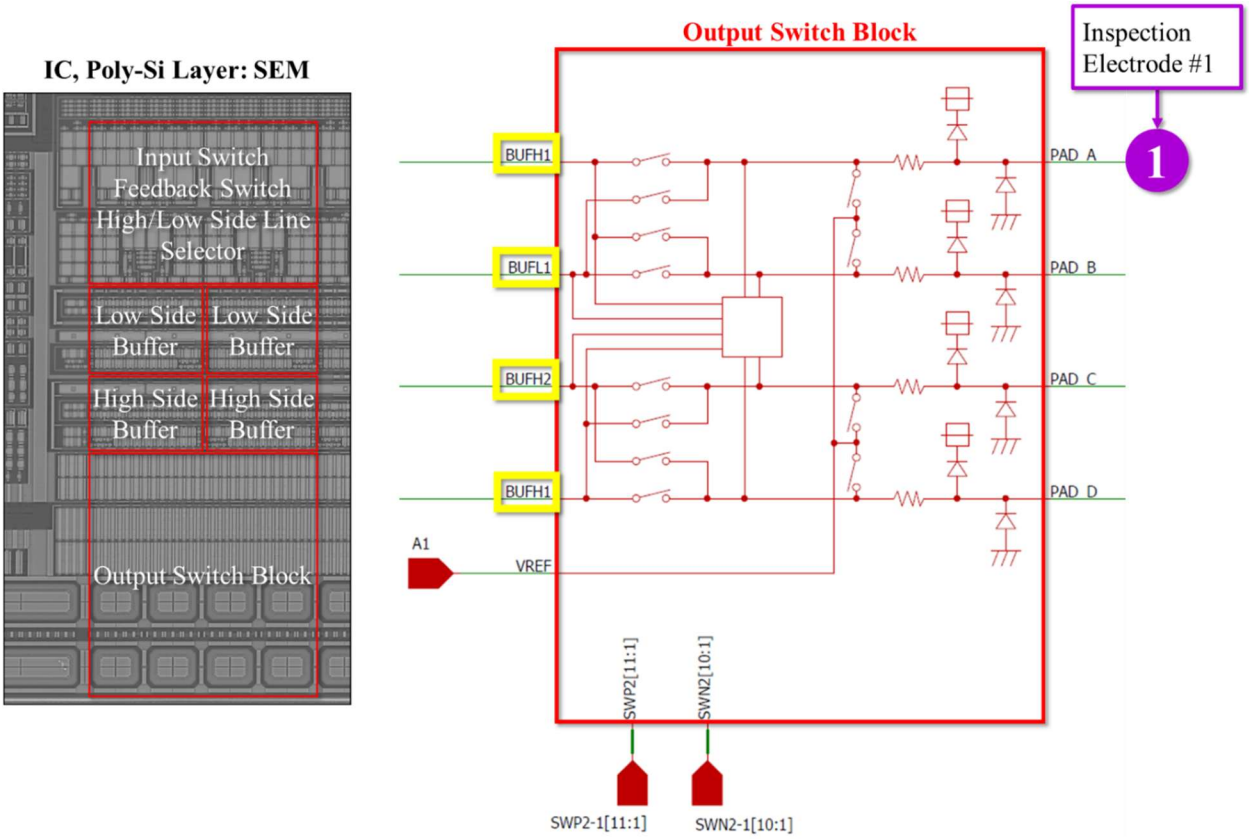

118. For example, the IC Output Switch Block can select the High side buffer signal (a signal processed in the IC) and output that signal to Inspection Electrode #1:

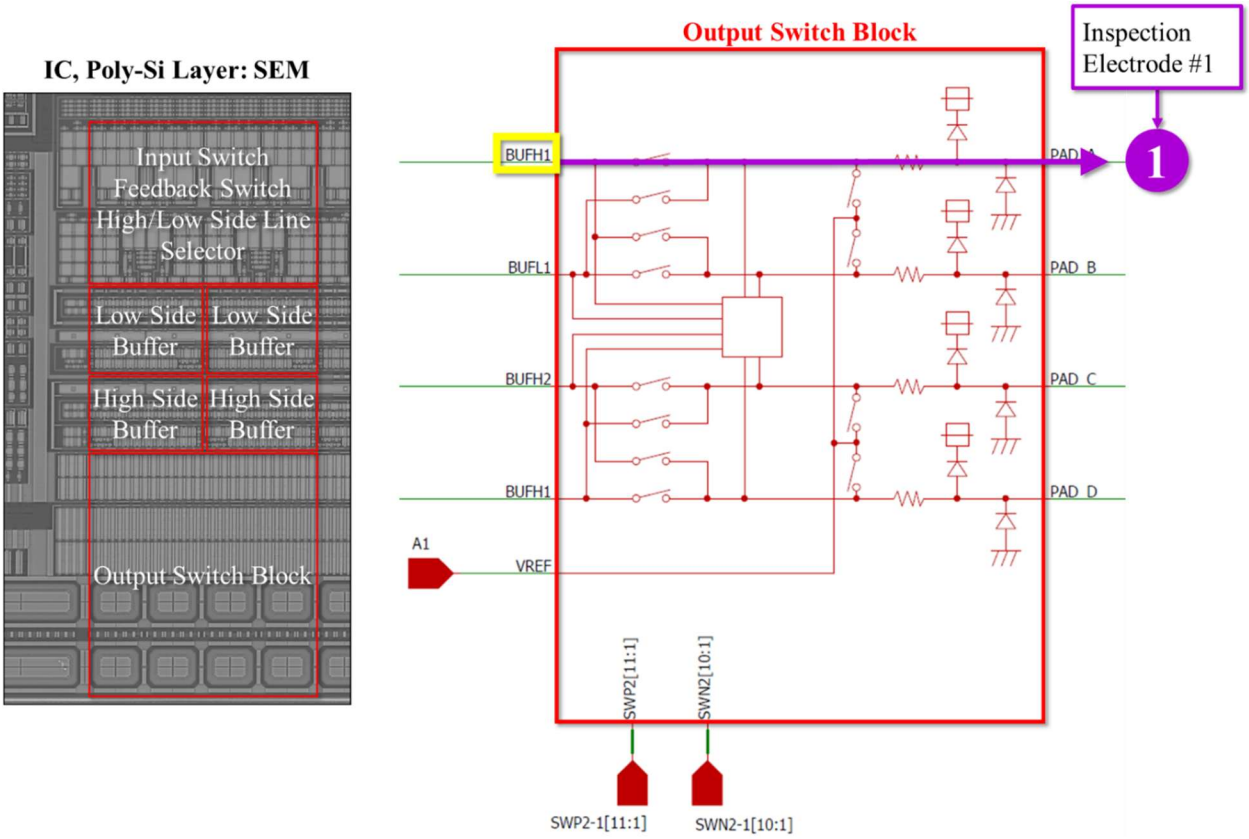

119. BOE LCD panels and modules, including, for example, the BOE LCD panel (part number MV270QUM-N50) in LG monitors, including, for example, the LG 27" 4K UHD IPS display (model number 27SR73U), include a flexible substrate comprising a switching section that switches an operation of the inspection electrode on/off to cause the inspection electrode to output or not to output the signal processed in the integrated circuit. The IC arranged on the flexible substrate body comprises a switching section, i.e., an Output Switch Block, that switches an operation of Inspection Electrode #1 on or off to cause the Inspection Electrode to output a signal processed in the IC (any of the High/Low side buffer signals) or not to output the signal processed in the IC (no signal). For example, the IC Output Switch Block can select a High or Low side buffer signal (a signal processed in the IC) and output that signal to Inspection Electrode #1:

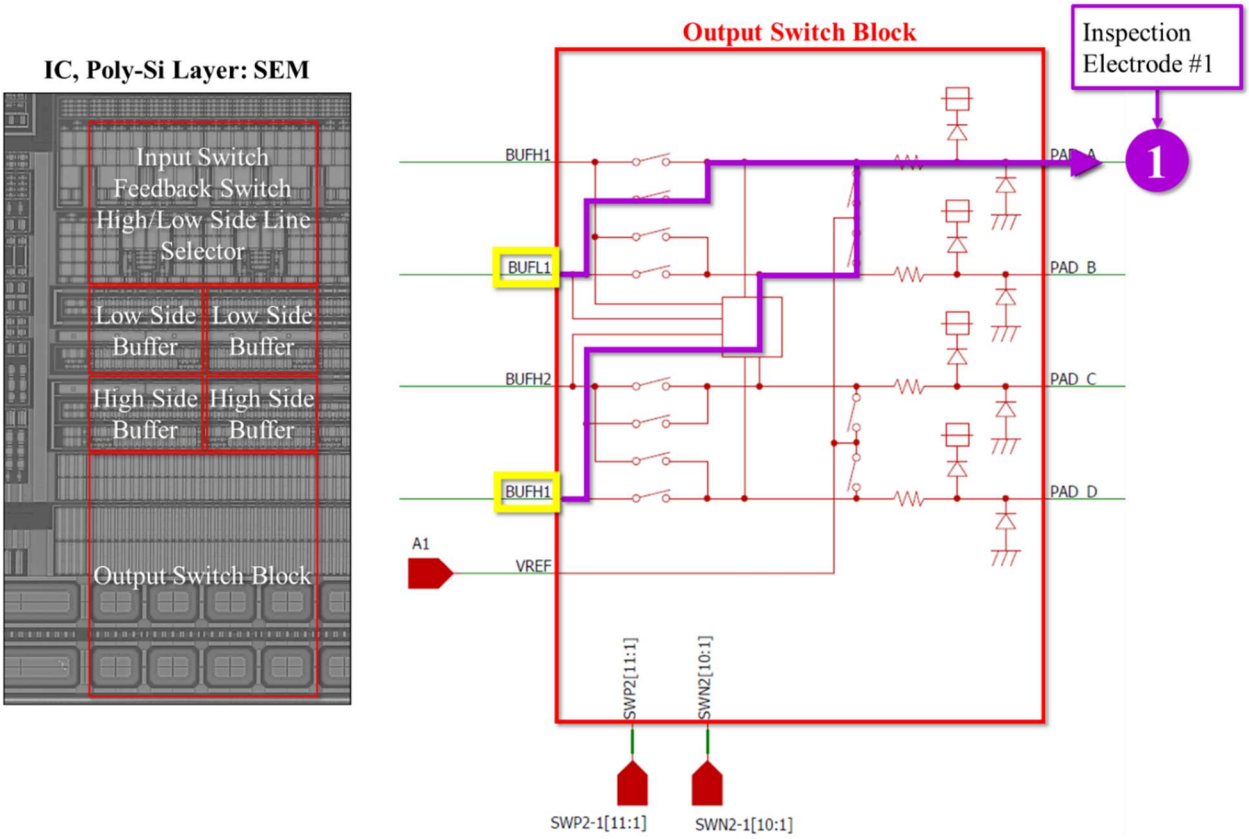

120. For example, the IC Output Switch Block can switch all four buffer signals off to not output a signal processed in the IC to Inspection Electrode #1:

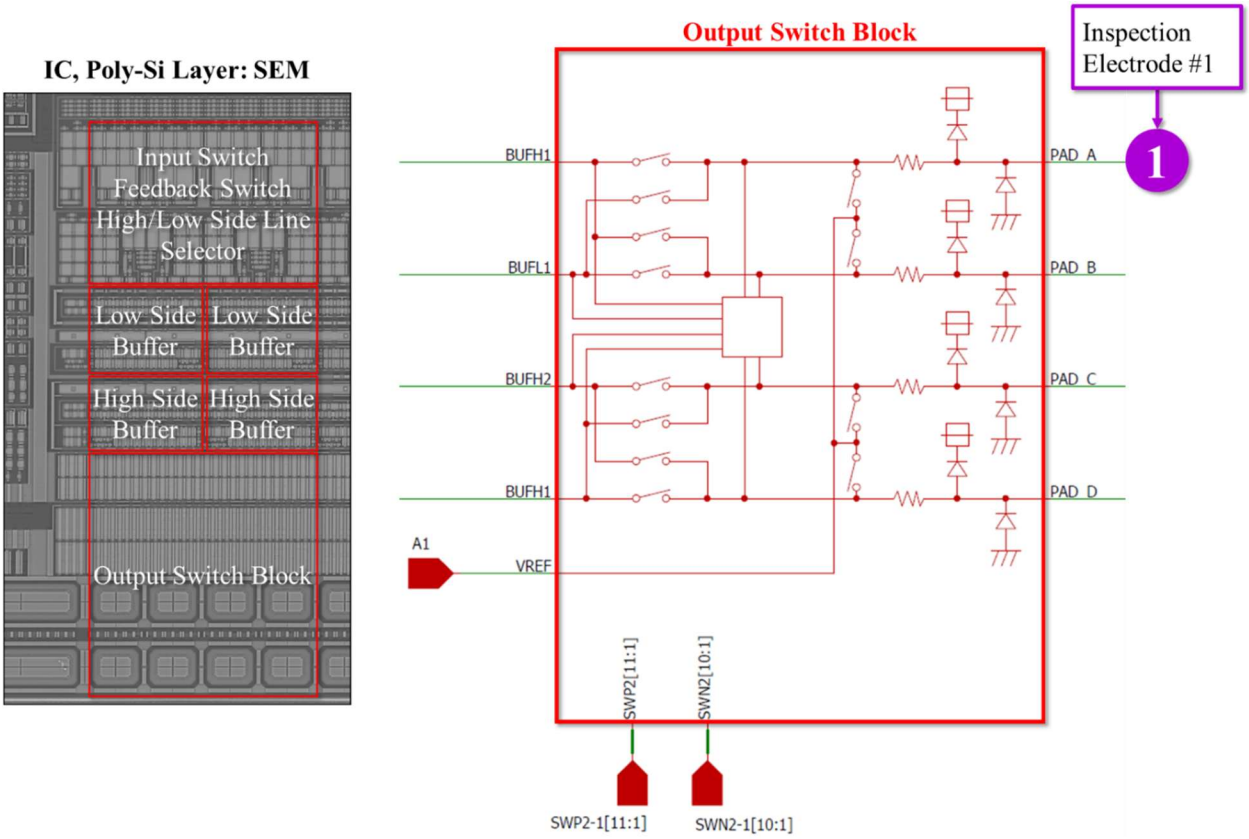

121. BOE and LG have indirectly infringed and continue to indirectly infringe the ’512 patent by actively inducing, in violation of 35 U.S.C. § 271(b), the direct infringement of the ’512 patent by others in the United States, the State of Texas, and the Eastern District of Texas.

122. BOE has induced, and continues to induce, through affirmative acts, its customers, including LG, and other third parties, including other importers, resellers, and end users in BOE’s supply chain, to directly infringe the ’512 patent by using, offering to sell, selling within the United States, and/or importing into the United States, products incorporating a BOE Accused Instrumentality that infringes the ’512 patent.

123. LG has induced, and continues to induce, through affirmative acts, its customers and other third parties, including other importers, resellers, and end users in LG’s supply chain, to directly infringe the ’512 patent by using, offering to sell, selling within the United States, and/or importing into the United States, LG Accused Instrumentalities that infringe the ’512

patent.

124. On information and belief, BOE and LG actively promoted the BOE Accused Instrumentalities and the LG Accused Instrumentalities, respectively, for the U.S. market.

125. BOE knew that its customers, including LG, would offer to sell and/or sell products incorporating the BOE Accused Instrumentalities in the United States or cause those products to be sold in the United States, and BOE specifically intended its customers to purchase BOE Accused Instrumentalities and offer to sell and/or sell products incorporating the BOE Accused Instrumentalities in the United States or cause those products to be sold in the United States. BOE's direct and indirect purchasers directly infringe the '512 patent by importing the BOE Accused Instrumentalities into the United States, selling the BOE Accused Instrumentalities in the United States, offering to sell the BOE Accused Instrumentalities in the United States, and/or using the BOE Accused Instrumentalities in the United States.

126. LG knew that its customers would offer to sell and/or sell infringing LG Accused Instrumentalities in the United States or cause LG Accused Instrumentalities to be sold in the United States, and LG specifically intended its customers to purchase LG Accused Instrumentalities and offer to sell and/or sell the LG Accused Instrumentalities in the United States or cause LG Accused Instrumentalities to be sold in the United States. LG's customers directly infringe the '512 patent by importing the LG Accused Instrumentalities into the United States, selling the LG Accused Instrumentalities in the United States, offering to sell the LG Accused Instrumentalities in the United States, and/or using the LG Accused Instrumentalities in the United States.

127. BOE has induced others' direct infringement despite actual notice that the BOE Accused Instrumentalities infringe the '512 patent. As of at least April 8, 2021, BOE knew that

the induced conduct would constitute infringement—and intended that infringement at the time of committing the aforementioned affirmative acts, such that the acts and conduct have been and continue to be committed with the specific intent to induce infringement—or deliberately avoided learning of the infringing circumstances at the time of committing these acts so as to be willfully blind to the infringement that was induced.

128. LG has induced others' direct infringement despite actual notice that the LG Accused Instrumentalities infringe the '512 patent. As of at least the date of this complaint, LG knew that the induced conduct would constitute infringement—and intended that infringement at the time of committing the aforementioned affirmative acts, such that the acts and conduct have been and continue to be committed with the specific intent to induce infringement—or deliberately avoided learning of the infringing circumstances at the time of committing these acts so as to be willfully blind to the infringement that was induced.

129. BOE has indirectly infringed and continues to indirectly infringe the '512 patent by contributing, in violation of 35 U.S.C. § 271(c), to the direct infringement of the '512 patent by others in the United States, the State of Texas, and the Eastern District of Texas, specifically, by offering to sell, selling, and/or importing into the United States components (BOE Accused Instrumentalities) of a claimed electronic device (see, e.g., claim 7).

130. BOE's and LG's direct and indirect infringement of the '512 patent is ongoing.

131. The above-described acts of infringement have caused and continue to cause injury and damage to Plaintiffs.

132. BOE's infringement has been and continues to be willful. LG's ongoing infringement will be willful.

133. Plaintiffs are entitled to recover damages sustained as a result of BOE's and LG's

willful infringement in an amount subject to proof at trial, but in no event less than a reasonable royalty.

COUNT III: INFRINGEMENT OF U.S. PATENT NO. 8,391,020

134. Pursuant to 35 U.S.C. § 282, the ’020 patent is presumed valid.

135. BOE and LG have directly infringed and continue to directly infringe one or more claims of the ’020 patent, in violation of 35 U.S.C. § 271(a), by making, using, offering to sell, selling, and/or importing the BOE Accused Instrumentalities (BOE) and the LG Accused Instrumentalities (LG).

136. The BOE Accused Instrumentalities and the LG Accused Instrumentalities (which incorporate a BOE Accused Instrumentality) comprise the electro-optical device of at least claim 1 of the ’020 patent.

137. The following paragraphs describe how the BOE Accused Instrumentalities and thus the LG Accused Instrumentalities practice claim 1 of the ’020 patent, using the exemplary BOE LCD panel (part number MV270QUM-N50) in the LG 27” 4K UHD IPS display (model number 27SR73U). Plaintiffs’ allegations of infringement are not limited to claim 1 or to the exemplary product, and Plaintiffs will identify and disclose additional infringement through discovery and in infringement contentions.

138. The LG 27” 4K UHD IPS display (model number 27SR73U) is exemplary of other infringing LG products, including without limitation the LG 55” 4K UHD TV (model number 55UT7570PUB), which incorporates a substantially similar BOE LCD panel, and other monitors and TVs incorporating substantially similar BOE LCD panels and/or modules. The 27” display and 55” TV and substantially similar products incorporating substantially similar BOE LCD panels and/or modules each practice the asserted claims of the ’020 patent in the same

manner, and infringement by one representative product is indicative of infringement by the others.

139. The panel in the LG 27" 4K UHD IPS display (model number 27SR73U) is a BOE LCD panel (part number MV270QUM-N50). BOE LCD panels and modules, including, for example, the BOE LCD panel (part number MV270QUM-N50) in LG monitors, including, for example, the LG 27" 4K UHD IPS display (model number 27SR73U), are electro-optical devices. The LG 27" 4K UHD IPS display (model number 27SR73U) is an electronic apparatus:

LG 27" 4K UHD IPS Display (Model No. 27SR73U), Front

LG 27" 4K UHD IPS Display (Model No. 27SR73U), Back

LG 27" 4K UHD IPS Display (Model No. 27SR73U), Back

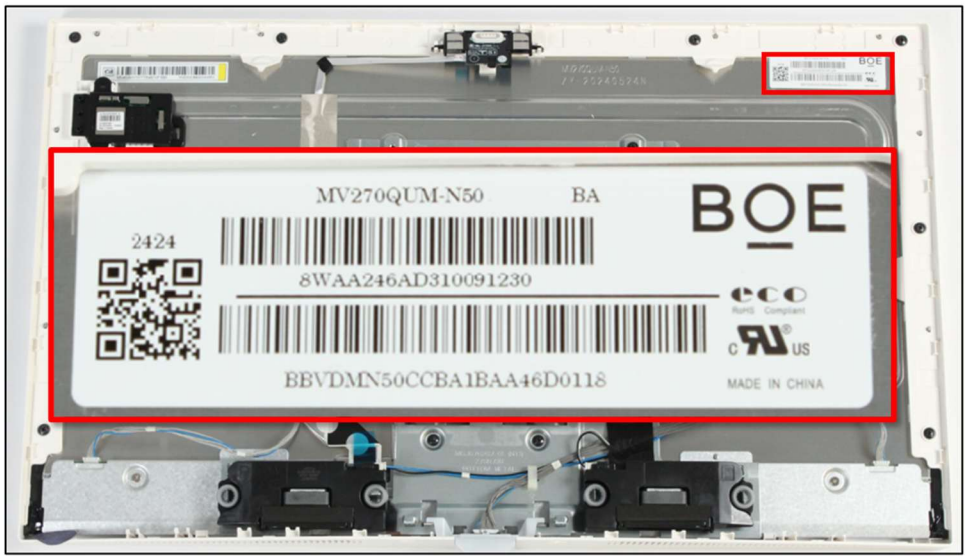

LG 27" 4K UHD IPS Display (Model No. 27SR73U), LCD Panel (front)

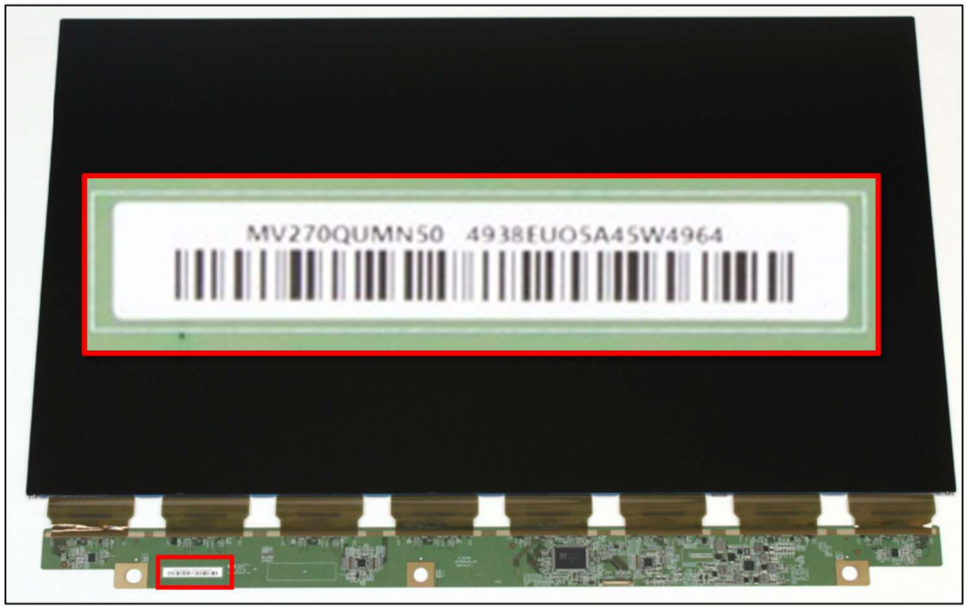

140. BOE LCD panels and modules, including, for example, the BOE LCD panel (part number MV270QUM-N50) in LG monitors, including, for example, the LG 27" 4K UHD IPS display (model number 27SR73U), are electro-optical devices that include an electro-optical panel ("Array Substrate," outlined in red) and eight flexible printed circuits (FPCs) that connect the electro-optical panel to a printed circuit board:

LG 27" 4K UHD IPS Display (Model No. 27SR73U), LCD Panel (back)

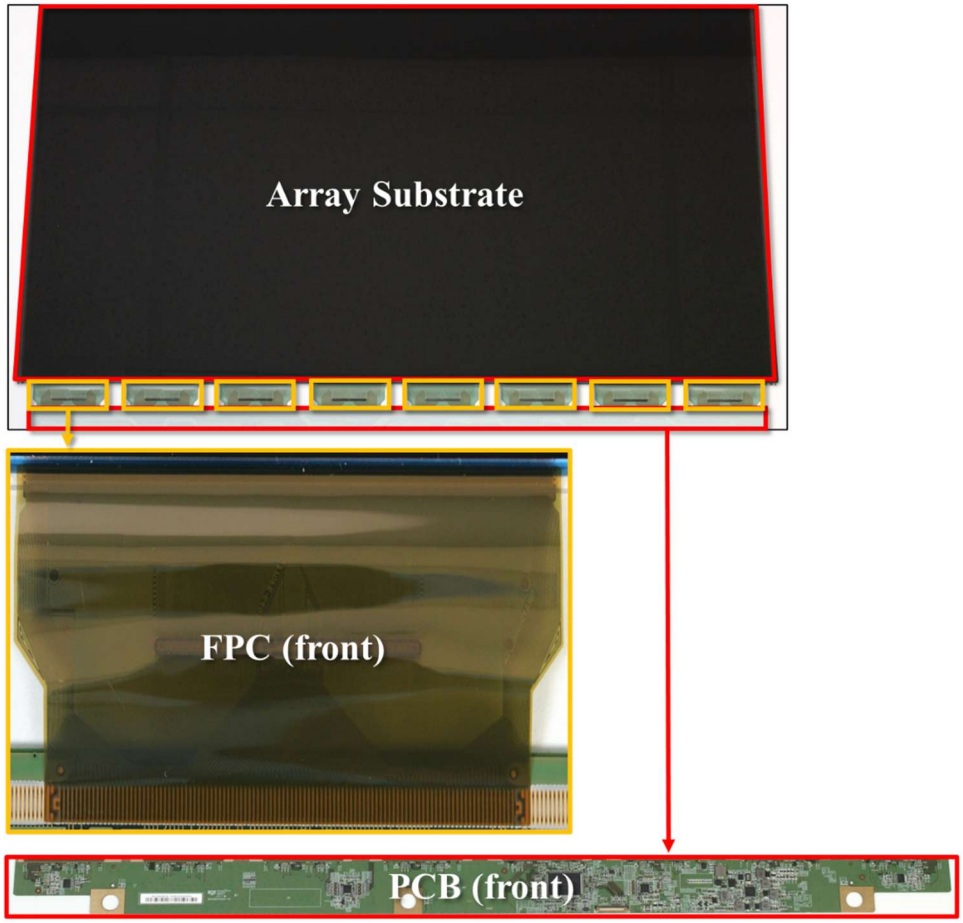

141. BOE LCD panels and modules, including, for example, the BOE LCD panel (part number MV270QUM-N50) in LG monitors, including, for example, the LG 27" 4K UHD IPS display (model number 27SR73U), are electro-optical devices comprising an electro-optical panel. *See supra*.

142. BOE LCD panels and modules, including, for example, the BOE LCD panel (part number MV270QUM-N50) in LG monitors, including, for example, the LG 27" 4K UHD IPS display (model number 27SR73U), are electro-optical devices comprising an electro-optical panel including a first terminal portion having a first group of terminals.

143. BOE LCD panels and modules, including, for example, the BOE LCD panel (part number MV270QUM-N50) in LG monitors, including, for example, the LG 27" 4K UHD IPS

display (model number 27SR73U), comprise a first terminal portion ("1st TP") having a first group of terminals, including a first terminal and a second terminal:

LCD Panel (back)

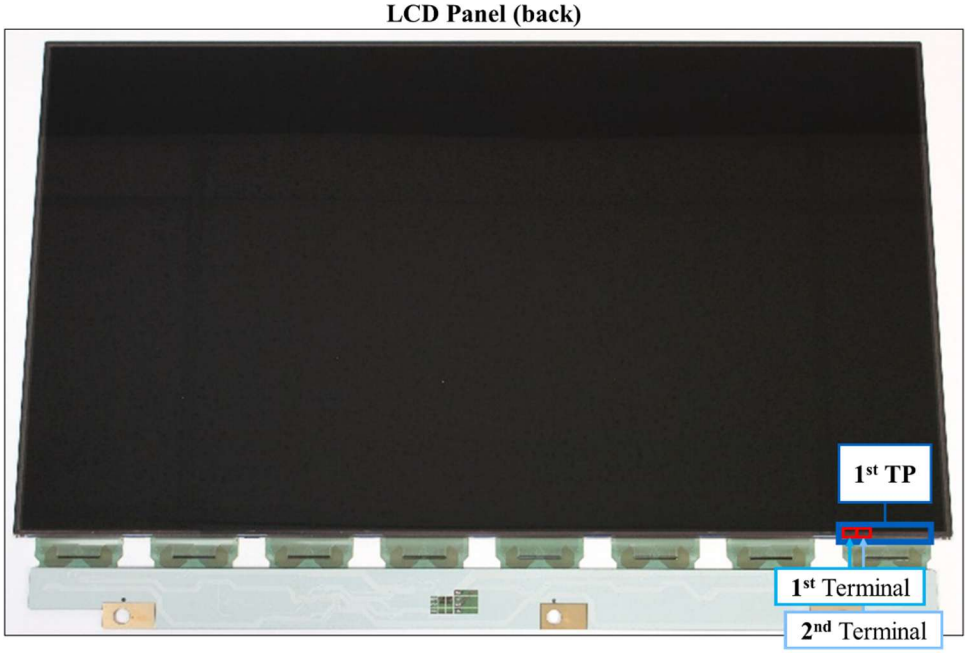

1st Terminal Portion

Array Substrate (back)

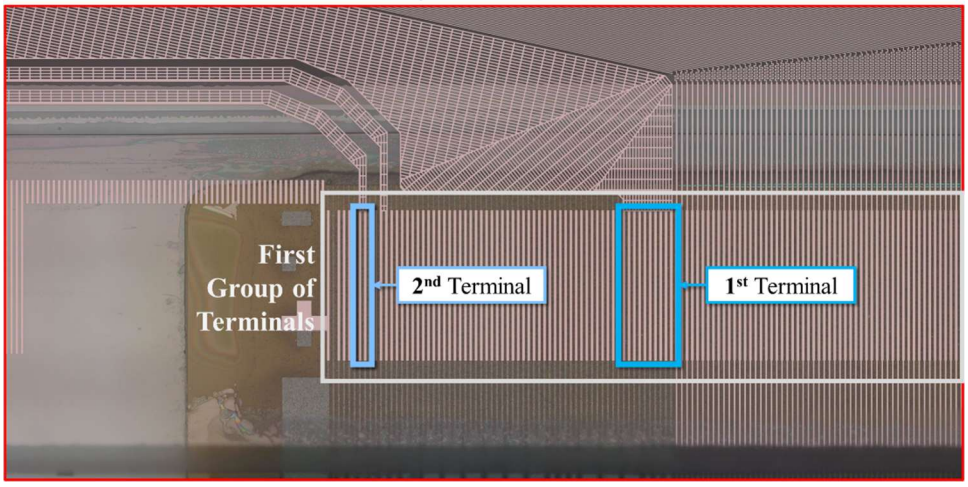

144. BOE LCD panels and modules, including, for example, the BOE LCD panel (part number MV270QUM-N50) in LG monitors, including, for example, the LG 27" 4K UHD IPS display (model number 27SR73U), are electro-optical devices comprising an electro-optical panel including a first group of terminals including: a first terminal. *See supra*.

145. BOE LCD panels and modules, including, for example, the BOE LCD panel (part number MV270QUM-N50) in LG monitors, including, for example, the LG 27" 4K UHD IPS display (model number 27SR73U), are electro-optical devices comprising an electro-optical panel including a first group of terminals including: a second terminal separated from the first terminal. *See supra*.

146. BOE LCD panels and modules, including, for example, the BOE LCD panel (part number MV270QUM-N50) in LG monitors, including, for example, the LG 27" 4K UHD IPS display (model number 27SR73U), are electro-optical devices comprising an electro-optical panel including a second terminal portion arranged adjacent to the first terminal portion and having a second group of terminals. BOE LCD panels and modules, including, for example, the BOE LCD panel (part number MV270QUM-N50) in LG monitors, including, for example, the LG 27" 4K UHD IPS display (model number 27SR73U), comprise a first terminal portion ("2nd TP") arranged adjacent to the first terminal portion and having a second group of terminals, including a third terminal and a fourth terminal:

LCD Panel (back)

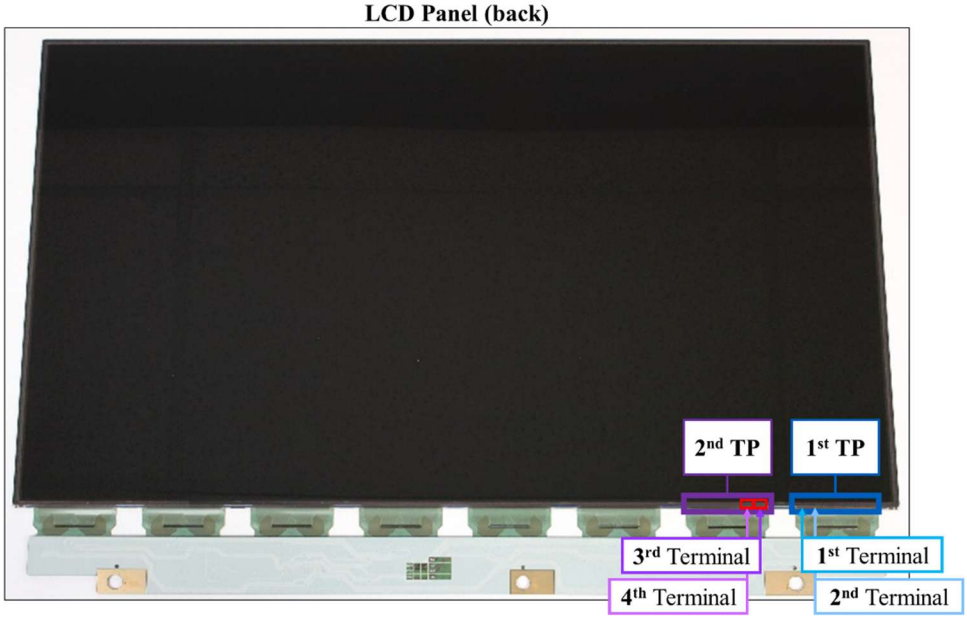

2nd Terminal Portion

Array Substrate (back)

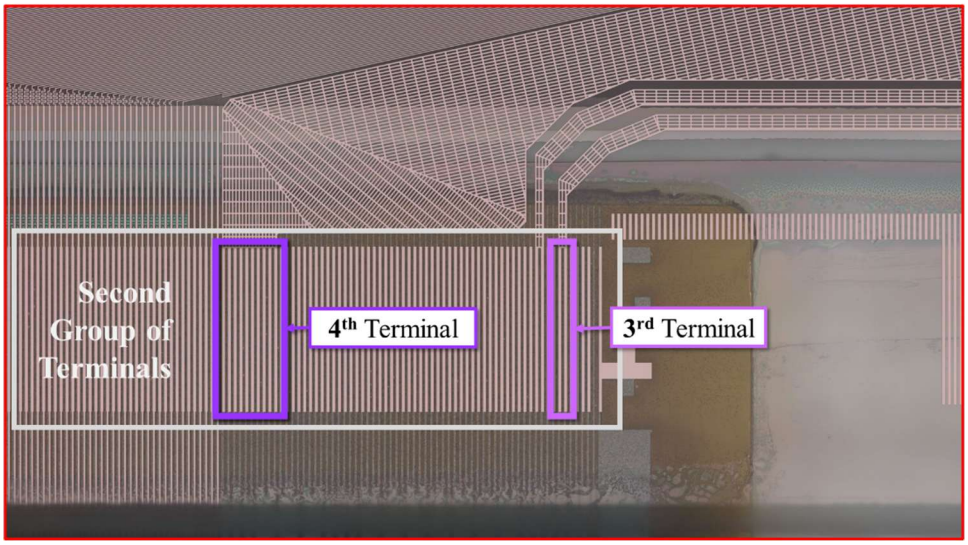

147. BOE LCD panels and modules, including, for example, the BOE LCD panel (part number MV270QUM-N50) in LG monitors, including, for example, the LG 27" 4K UHD IPS display (model number 27SR73U), are electro-optical devices comprising an electro-optical panel including a second terminal portion arranged adjacent to the first terminal portion and having a second group of terminals, second group of terminals including: a third terminal. *See*

supra.

148. BOE LCD panels and modules, including, for example, the BOE LCD panel (part number MV270QUM-N50) in LG monitors, including, for example, the LG 27" 4K UHD IPS display (model number 27SR73U), are electro-optical devices comprising an electro-optical panel including a second terminal portion arranged adjacent to the first terminal portion and having a second group of terminals, second group of terminals including: a fourth terminal separated from the third terminal, the first terminal and the fourth terminal being electrically connected through a first connection wiring provided on the electro-optical panel, the second terminal and the third terminal being electrically connected through a second connection wiring provided on the electro-optical panel.

149. BOE LCD panels and modules, including, for example, the BOE LCD panel (part number MV270QUM-N50) in LG monitors, including, for example, the LG 27" 4K UHD IPS display (model number 27SR73U), comprise a second terminal portion arranged adjacent to the first terminal portion and having a second group of terminals, including a fourth terminal separated from the third terminal. *See supra*.

150. BOE LCD panels and modules, including, for example, the BOE LCD panel (part number MV270QUM-N50) in LG monitors, including, for example, the LG 27" 4K UHD IPS display (model number 27SR73U), comprise a first terminal and a fourth terminal, the first terminal and the fourth terminal being electrically connected through a first connection wiring provided on the electro-optical panel. As shown below, the first terminal and the fourth terminal are electrically connected through a first connection wiring. On information and belief, the first connection wiring is a common voltage (VCOM) wiring.

LCD Panel (back)

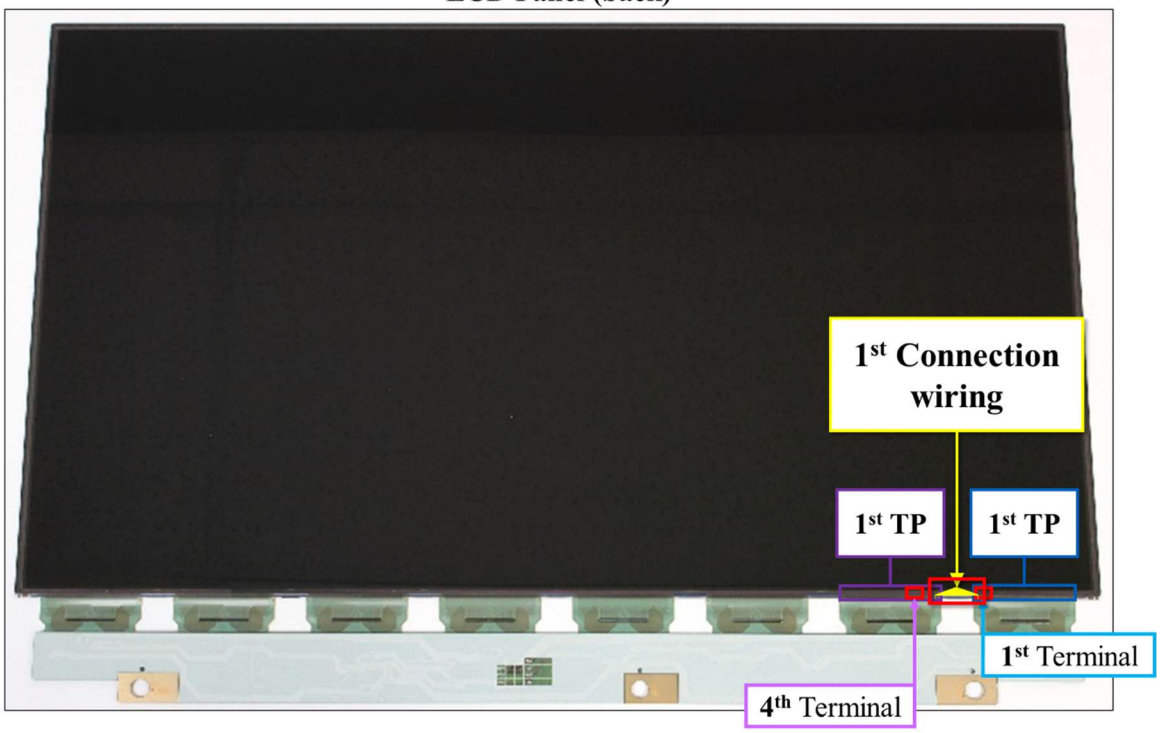

Array Substrate (back)

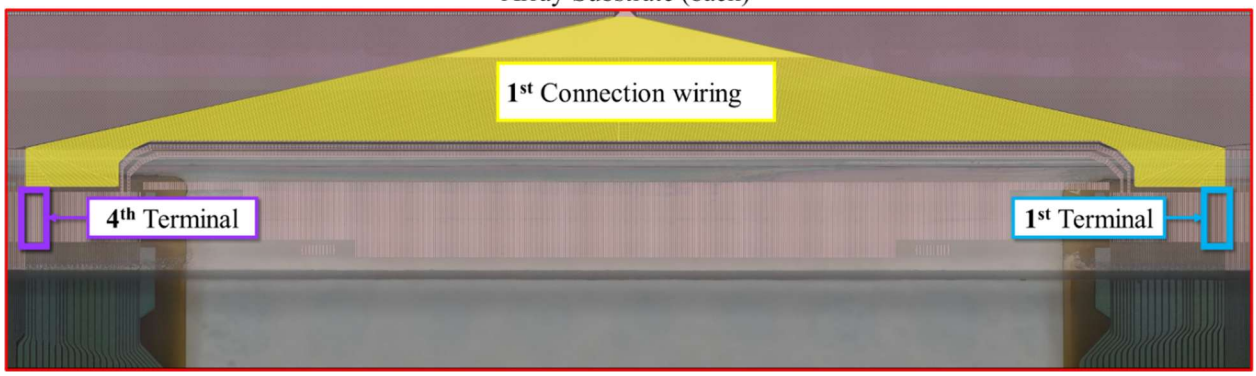

151. BOE LCD panels and modules, including, for example, the BOE LCD panel (part number MV270QUM-N50) in LG monitors, including, for example, the LG 27" 4K UHD IPS display (model number 27SR73U), comprise a second terminal and a third terminal, the second terminal and the third terminal being electrically connected through a second connection wiring provided on the electro-optical panel. As shown below, the first terminal and the fourth terminal are electrically connected through a second connection wiring on the electro-optical panel ("LCD Panel," below). On information and belief, the second connection wiring is ground wiring.

LCD Panel (back)

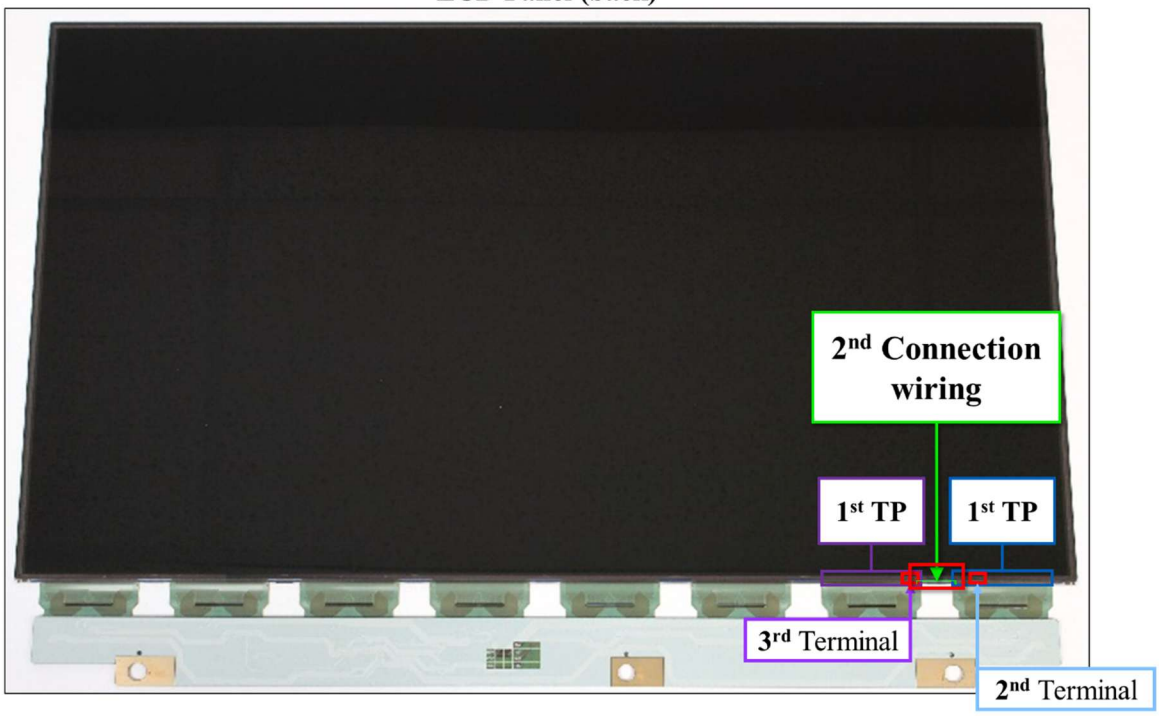

Array Substrate (back)

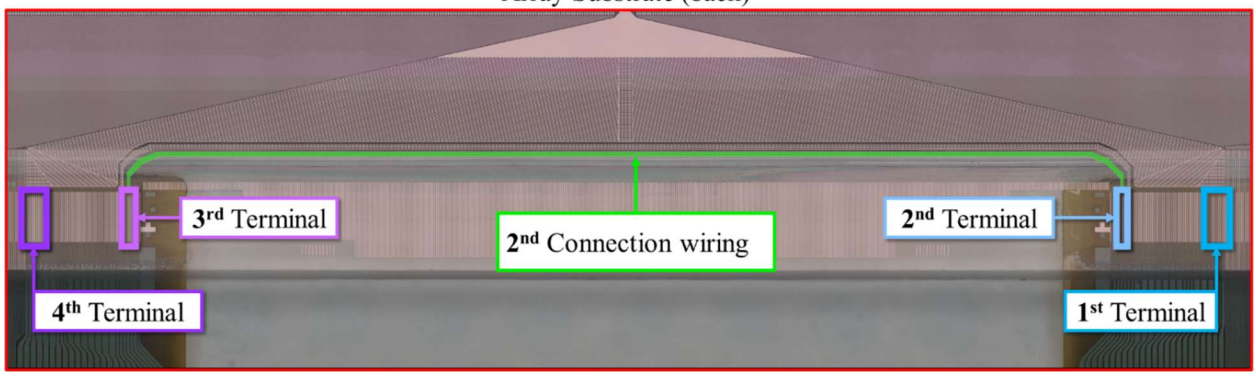

152. BOE LCD panels and modules, including, for example, the BOE LCD panel (part number MV270QUM-N50) in LG monitors, including, for example, the LG 27" 4K UHD IPS display (model number 27SR73U), are electro-optical devices comprising a first circuit substrate. BOE LCD panels and modules, including, for example, the BOE LCD panel (part number MV270QUM-N50) in LG monitors, including, for example, the LG 27" 4K UHD IPS display (model number 27SR73U), comprise a first circuit substrate, i.e., the FPC that corresponds to the first terminal portion:

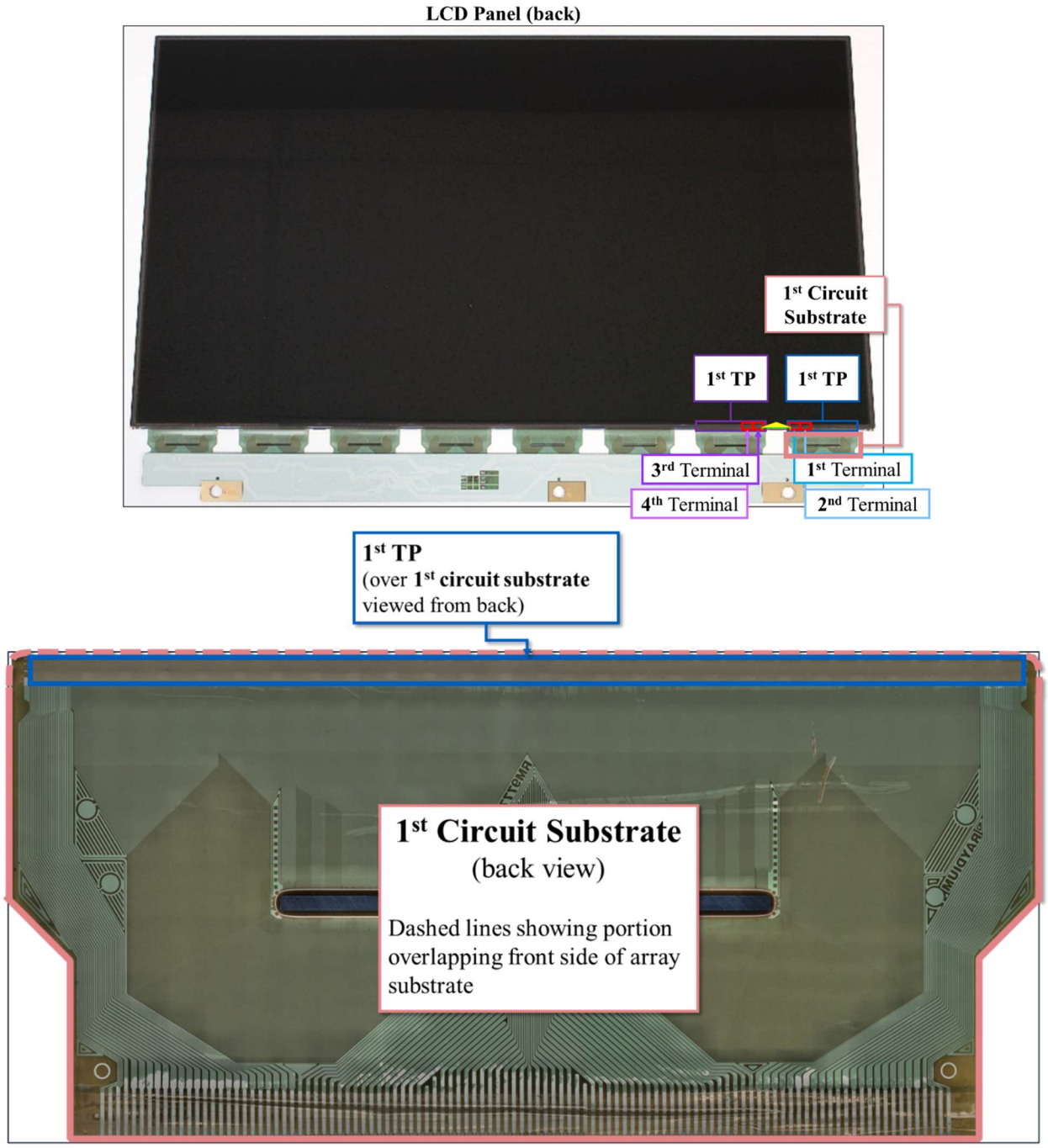

153. BOE LCD panels and modules, including, for example, the BOE LCD panel (part number MV270QUM-N50) in LG monitors, including, for example, the LG 27" 4K UHD IPS display (model number 27SR73U), are electro-optical devices comprising a first circuit substrate including: a first connection terminal portion having a first group of connection terminals to be

electrically connected to the first terminal portion. The first circuit substrate FPC includes a first connection terminal portion in the portion of the FPC that overlaps the array substrate that has a first group of connection terminals to be electrically connected to the first terminal portion—i.e., the first group of connection terminals includes two connection terminals that are electrically connected to the first and second terminals of the first terminal portion:

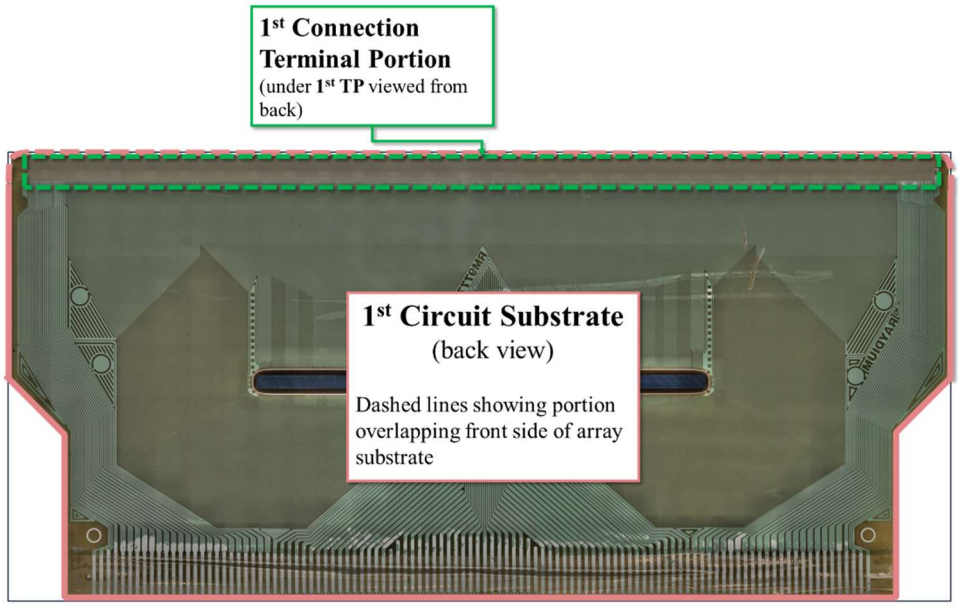

1st Group of Connection Terminals

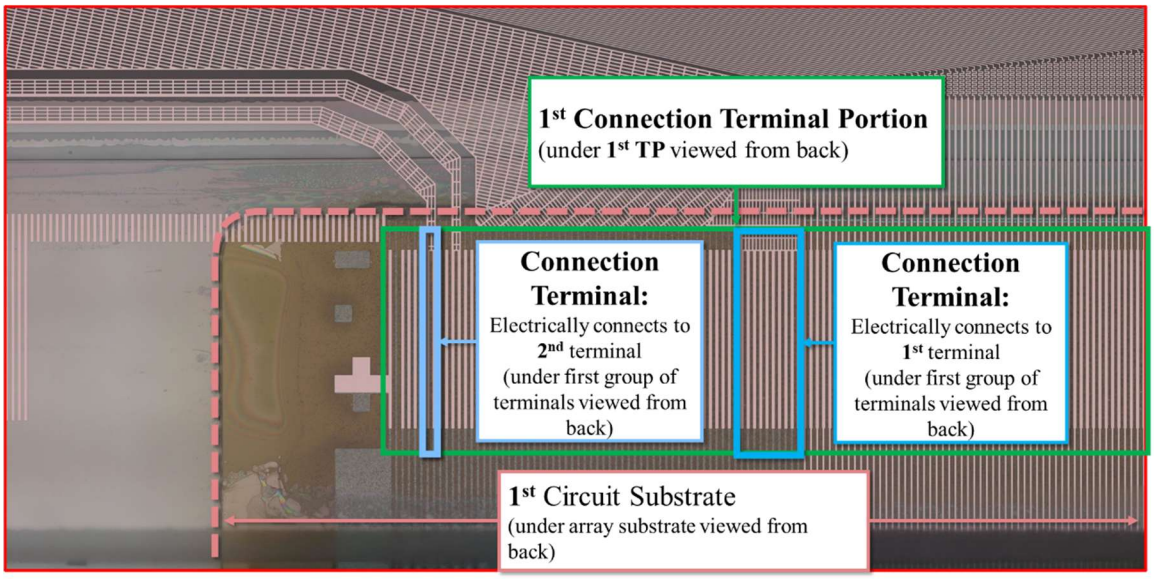

154. BOE LCD panels and modules, including, for example, the BOE LCD panel (part

number MV270QUM-N50) in LG monitors, including, for example, the LG 27" 4K UHD IPS display (model number 27SR73U), are electro-optical devices comprising a first circuit substrate including: a first external terminal connected to the first terminal through the first connection terminal portion. The first circuit substrate FPC includes a first external terminal, located on the bottom end of the first circuit substrate FPC, connected to the first terminal through the first connection terminal portion. The first external terminal is connected to the first terminal through the first connection terminal portion via wirings on the first circuit substrate FPC:

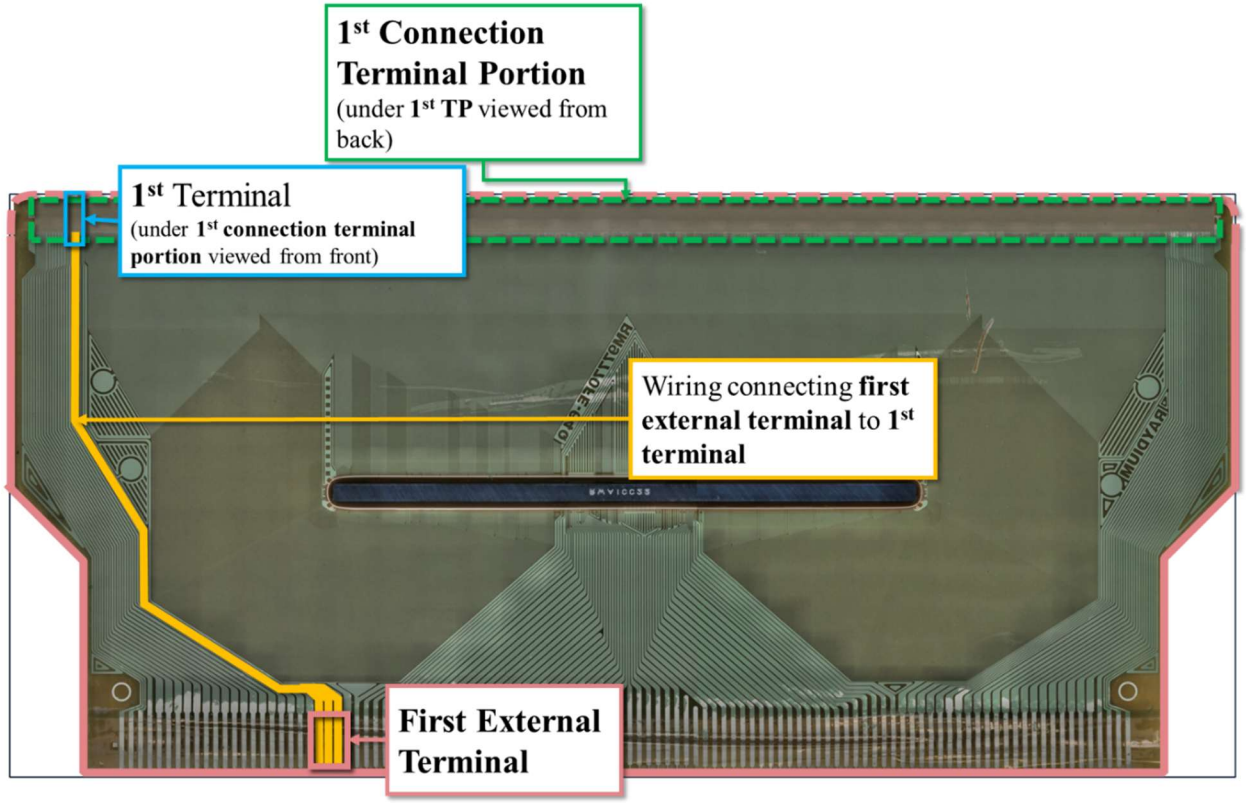

155. BOE LCD panels and modules, including, for example, the BOE LCD panel (part number MV270QUM-N50) in LG monitors, including, for example, the LG 27" 4K UHD IPS display (model number 27SR73U), are electro-optical devices comprising a first circuit substrate including: a second external terminal connected to the second terminal through the first connection terminal portion. The first circuit substrate FPC includes a second external terminal,

located on the bottom end of the first circuit substrate FPC, connected to the second terminal through the first connection terminal portion. The second external terminal is connected to the second terminal through the first connection terminal portion via wirings on the first circuit substrate FPC:

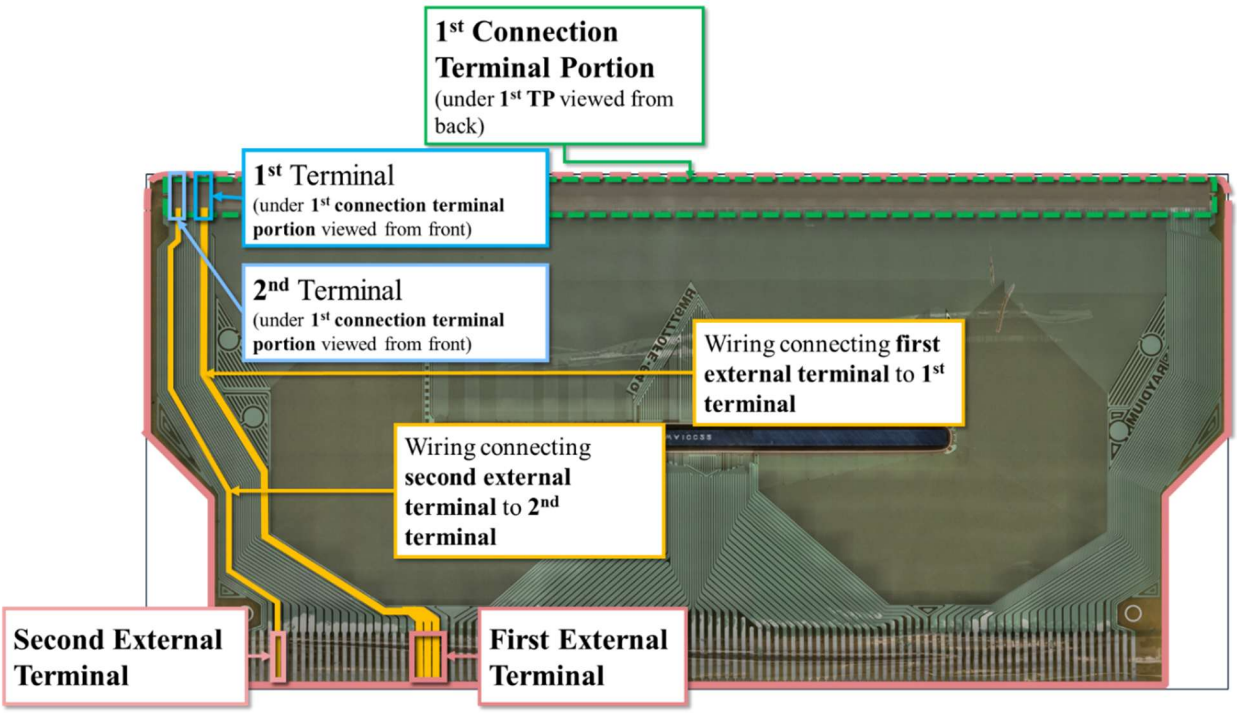

156. BOE LCD panels and modules, including, for example, the BOE LCD panel (part number MV270QUM-N50) in LG monitors, including, for example, the LG 27" 4K UHD IPS display (model number 27SR73U), are electro-optical devices comprising a second circuit substrate. BOE LCD panels and modules, including, for example, the BOE LCD panel (part number MV270QUM-N50) in LG monitors, including, for example, the LG 27" 4K UHD IPS display (model number 27SR73U), comprise a second circuit substrate, i.e., the FPC that corresponds to the second terminal portion:

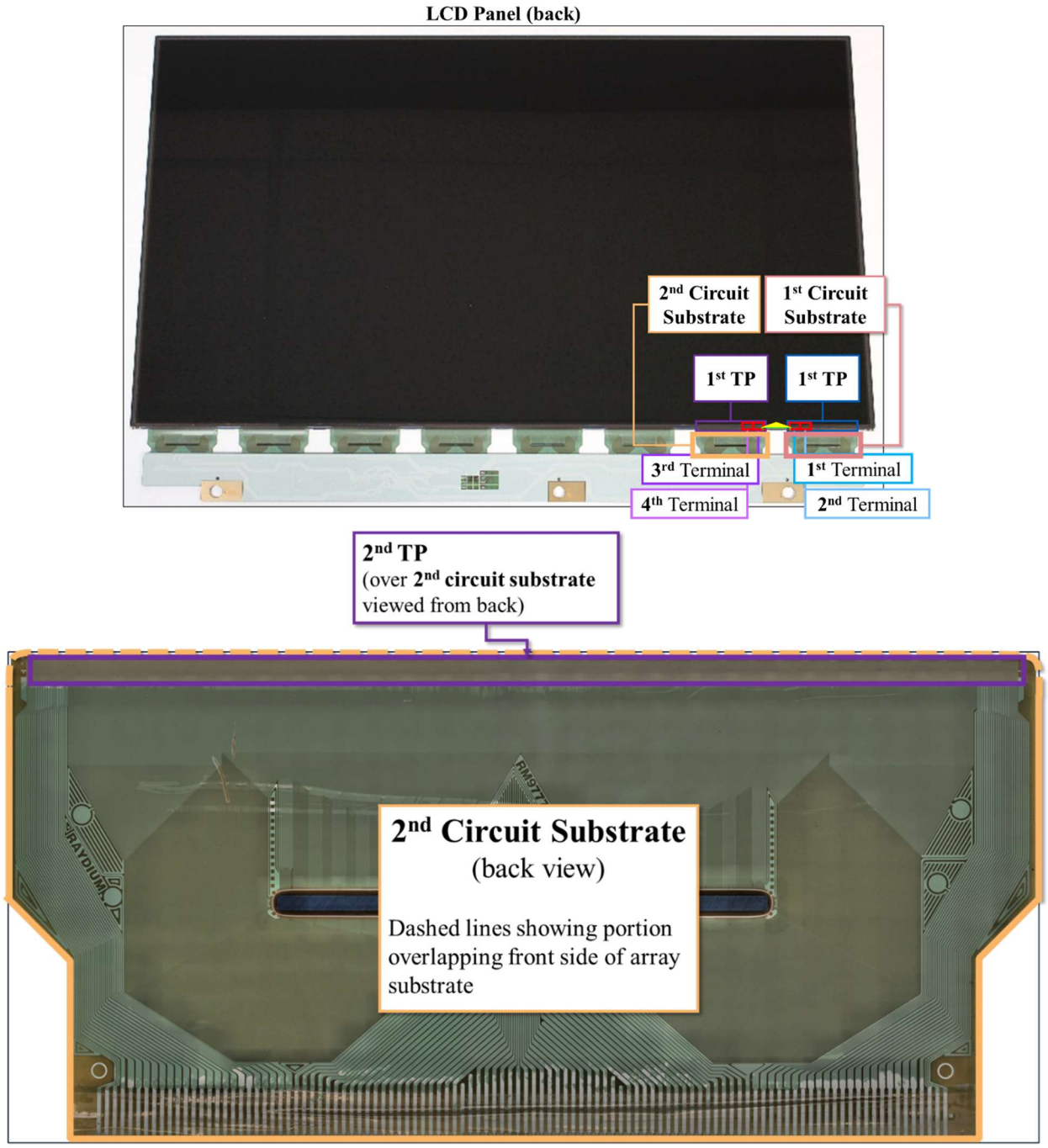

157. BOE LCD panels and modules, including, for example, the BOE LCD panel (part number MV270QUM-N50) in LG monitors, including, for example, the LG 27" 4K UHD IPS display (model number 27SR73U), are electro-optical devices comprising a second circuit substrate including: a second connection terminal portion having a second group of connection

terminals to be electrically connected to the second terminal portion. The second circuit substrate FPC includes a second connection terminal portion in the portion of the FPC that overlaps the array substrate that has a second group of connection terminals to be electrically connected to the second terminal portion—i.e., the second group of connection terminals includes two connection terminals that are electrically connected to the third and fourth terminals of the second terminal portion:

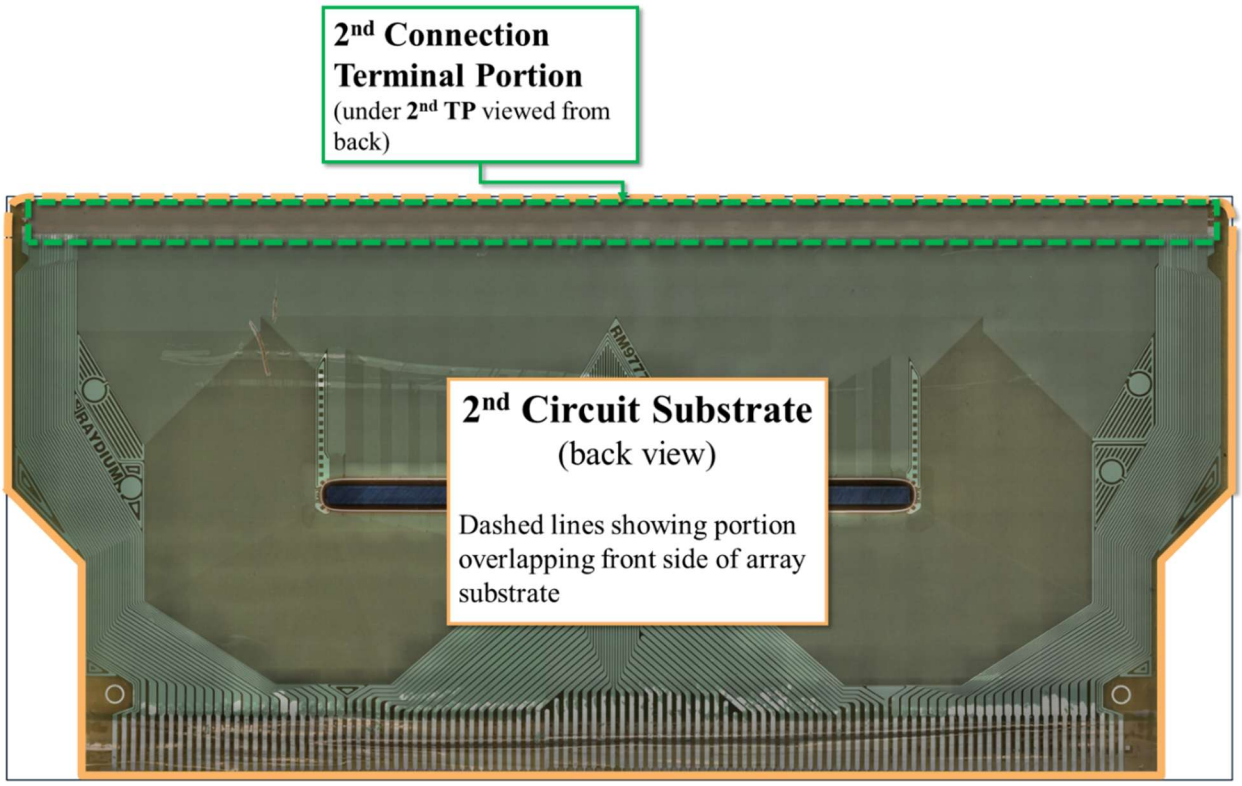

2nd Group of Connection Terminals

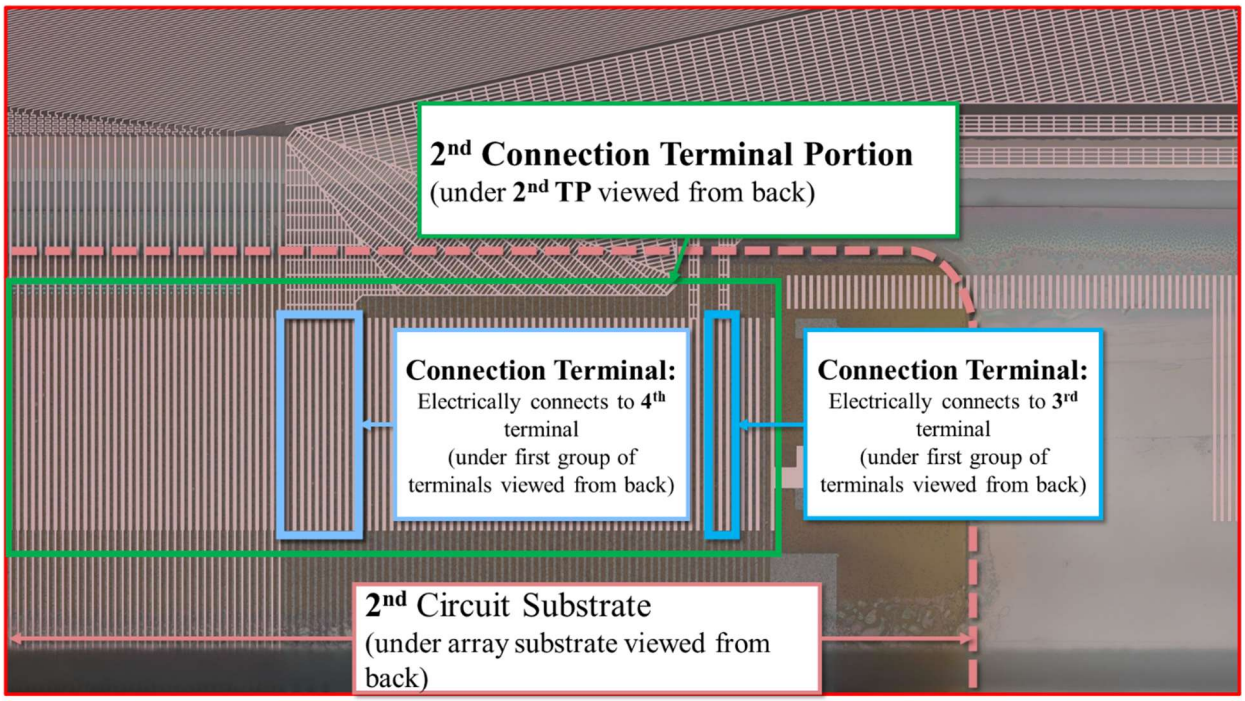

158. BOE LCD panels and modules, including, for example, the BOE LCD panel (part number MV270QUM-N50) in LG monitors, including, for example, the LG 27" 4K UHD IPS display (model number 27SR73U), are electro-optical devices comprising a second circuit substrate including: a third external terminal electrically connected to the third terminal through the second connection terminal portion. The second circuit substrate FPC includes a third external terminal, located on the bottom end of the second circuit substrate FPC, connected to the third terminal through the second connection terminal portion. The third external terminal is connected to the third terminal through the second connection terminal portion via wirings on the second circuit substrate FPC:

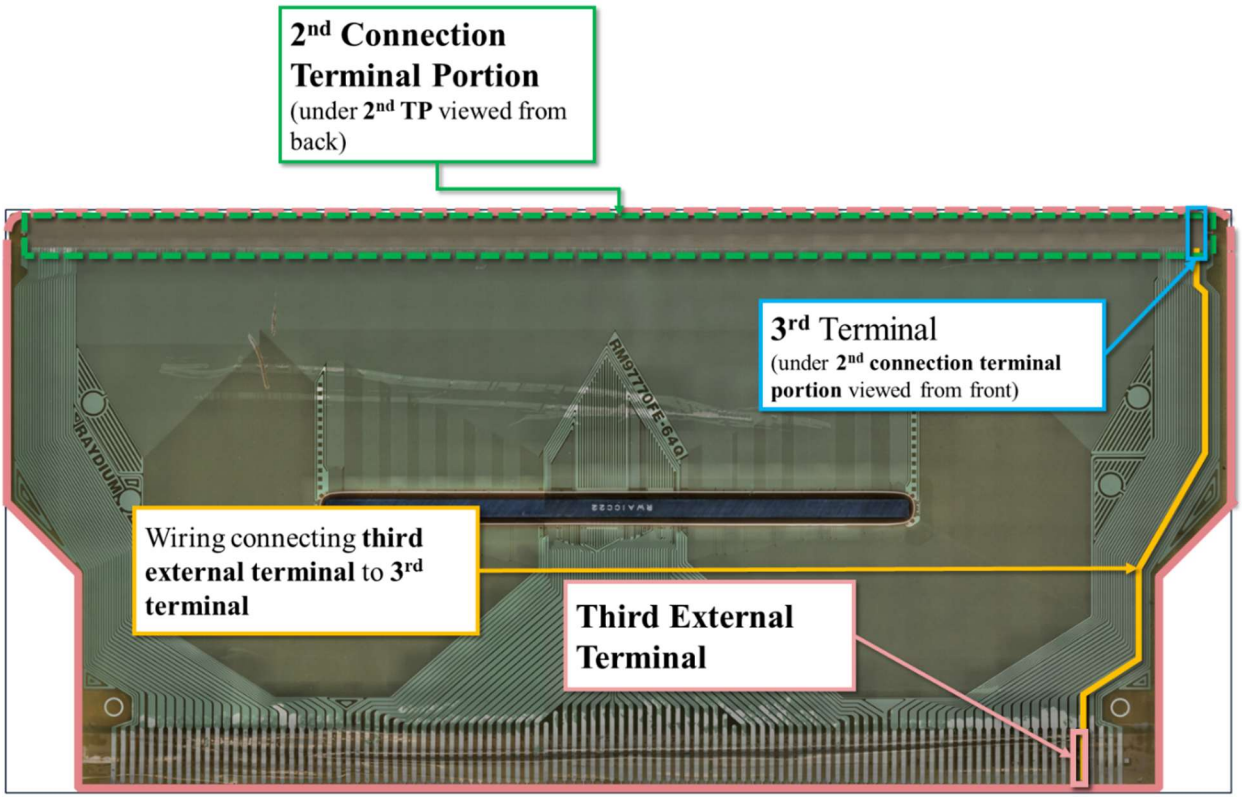

159. BOE LCD panels and modules, including, for example, the BOE LCD panel (part number MV270QUM-N50) in LG monitors, including, for example, the LG 27" 4K UHD IPS display (model number 27SR73U), are electro-optical devices comprising a second circuit substrate including: a fourth external terminal electrically connected to the fourth terminal through the second connection terminal portion. The second circuit substrate FPC includes a fourth external terminal, located on the bottom end of the second circuit substrate FPC, connected to the fourth terminal through the second connection terminal portion. The fourth external terminal is connected to the fourth terminal through the second connection terminal portion via wirings on the second circuit substrate FPC:

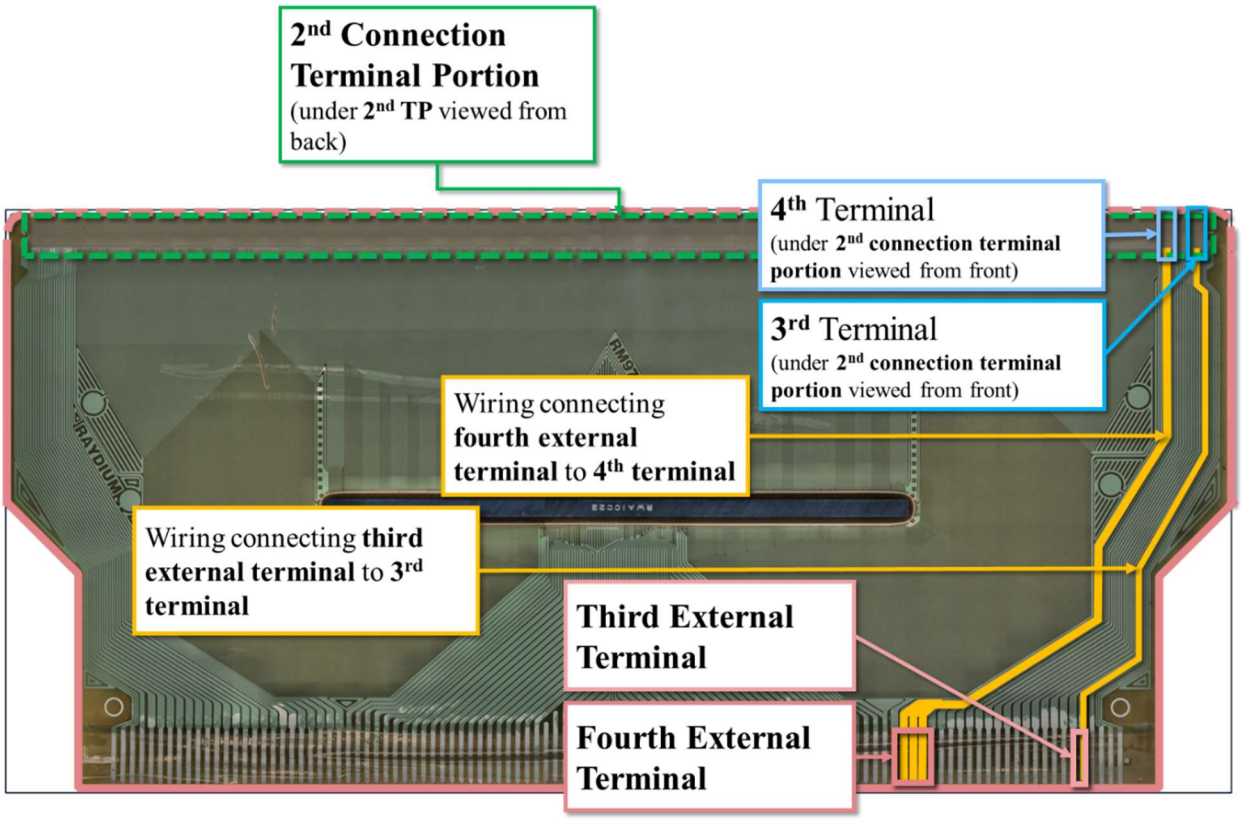

160. BOE and LG have indirectly infringed and continue to indirectly infringe the ’020 patent by actively inducing, in violation of 35 U.S.C. § 271(b), the direct infringement of the ’020 patent by others in the United States, the State of Texas, and the Eastern District of Texas.

161. BOE has induced, and continues to induce, through affirmative acts, its customers, including LG, and other third parties, including other importers, resellers, and end users in BOE’s supply chain, to directly infringe the ’020 patent by making, using, offering to sell, selling within the United States, and/or importing into the United States, products incorporating a BOE Accused Instrumentality that infringes the ’020 patent.

162. LG has induced, and continues to induce, through affirmative acts, its customers and other third parties, including other importers, resellers, and end users in LG’s supply chain, to directly infringe the ’020 patent by using, offering to sell, selling within the United States, and/or importing into the United States, LG Accused Instrumentalities that infringe the ’020

patent.

163. On information and belief, BOE and LG actively promoted the BOE Accused Instrumentalities and the LG Accused Instrumentalities, respectively, for the U.S. market.

164. BOE knew that its customers, including LG, would offer to sell and/or sell products incorporating the BOE Accused Instrumentalities in the United States or cause those products to be sold in the United States, and BOE specifically intended its customers to purchase BOE Accused Instrumentalities and offer to sell and/or sell products incorporating the BOE Accused Instrumentalities in the United States or cause those products to be sold in the United States. BOE's direct and indirect purchasers directly infringe the '020 patent by importing the BOE Accused Instrumentalities into the United States, selling the BOE Accused Instrumentalities in the United States, offering to sell the BOE Accused Instrumentalities in the United States, and/or using the BOE Accused Instrumentalities in the United States.

165. LG knew that its customers would offer to sell and/or sell infringing LG Accused Instrumentalities in the United States or cause LG Accused Instrumentalities to be sold in the United States, and LG specifically intended its customers to purchase LG Accused Instrumentalities and offer to sell and/or sell the LG Accused Instrumentalities in the United States or cause LG Accused Instrumentalities to be sold in the United States. LG's customers directly infringe the '020 patent by importing the LG Accused Instrumentalities into the United States, selling the LG Accused Instrumentalities in the United States, offering to sell the LG Accused Instrumentalities in the United States, and/or using the LG Accused Instrumentalities in the United States.

166. BOE has induced others' direct infringement despite actual notice that the Accused Instrumentalities infringe the '020 patent. As of at least the filing of this complaint,

BOE knew that the induced conduct would constitute infringement—and intended that infringement at the time of committing the aforementioned affirmative acts, such that the acts and conduct have been and continue to be committed with the specific intent to induce infringement—or deliberately avoided learning of the infringing circumstances at the time of committing these acts so as to be willfully blind to the infringement that was induced.

167. LG has induced others' direct infringement despite actual notice that the LG Accused Instrumentalities infringe the '020 patent. As of at least the date of this complaint, LG knew that the induced conduct would constitute infringement—and intended that infringement at the time of committing the aforementioned affirmative acts, such that the acts and conduct have been and continue to be committed with the specific intent to induce infringement—or deliberately avoided learning of the infringing circumstances at the time of committing these acts so as to be willfully blind to the infringement that was induced.

168. BOE has indirectly infringed and continues to indirectly infringe the '020 patent by contributing, in violation of 35 U.S.C. § 271(c), to the direct infringement of the '020 patent by others in the United States, the State of Texas, and the Eastern District of Texas, specifically, by offering to sell, selling, and/or importing into the United States components (BOE Accused Instrumentalities) of a claimed electronic apparatus (see, e.g., claim 13).

169. BOE's and LG's direct and indirect infringement of the '020 patent is ongoing.

170. The above-described acts of infringement have caused and continue to cause injury and damage to Plaintiffs.

171. BOE's and LG's ongoing infringement will be willful.

172. Plaintiffs are entitled to recover damages sustained as a result of BOE's and LG's willful infringement in an amount subject to proof at trial, but in no event less than a reasonable

royalty.

JURY TRIAL DEMANDED

173. Plaintiffs demand a trial by jury on all claims and issues so triable.

PRAYER FOR RELIEF

WHEREFORE, Plaintiffs Longitude Licensing Limited and 138 East LCD Advancements Limited respectfully request that this Court:

A. Enter judgment that BOE and LG have infringed one or more claims of each of the Longitude Patents, and that such infringement was willful;

B. Enter an order, pursuant to 35 U.S.C. § 284, awarding to Plaintiffs monetary relief in an amount adequate to compensate for BOE's and LG's infringement of the Longitude Patents, in an amount to be determined at trial, but not less than a reasonable royalty, as well as pre- and post-judgment interest and costs and enhanced damages for BOE's and LG's willful infringement of the Longitude Patents;

C. Enter an order, pursuant to 35 U.S.C. § 285, declaring this to be an exceptional case and thereby awarding to Plaintiffs their reasonable attorneys' fees;

D. Enter an order awarding to Plaintiffs a permanent injunction enjoining BOE's and LG's ongoing patent infringement; and

E. Enter an order awarding to Plaintiffs such other and further relief, whether at law or in equity, that this Court seems just, equitable, and proper.

Dated: April 25, 2025

Respectfully submitted,

s/ Aaron R. Fahrenkrog
Aaron R. Fahrenkrog (admitted in this district)
LEAD ATTORNEY
MN Bar No. 0386673

AFahrenkrog@RobinsKaplan.com
Emily J. Tremblay (*pro hac vice* forthcoming)
MN Bar. No. 0395003
ETremblay@RobinsKaplan.com
Samuel J. LaRoque (*pro hac vice* forthcoming)
MN Bar No. 0504029
SLaRoque@RobinsKaplan.com
William R. Jones (*pro hac vice* forthcoming)
MN Bar No. 0402360
WJones@RobinsKaplan.com
Navin Ramalingam (*pro hac vice* forthcoming)
MN Bar No. 0402799
NRamalingam@RobinsKaplan.com
ROBINS KAPLAN LLP
800 LaSalle Avenue, Ste. 2800
Minneapolis, MN 55402
(612) 349-8500 (telephone)
(612) 339-4181 (facsimile)

Of Counsel:
Andrea L. Fair
Texas State Bar No. 24078488
andrea@millerfairhenry.com
Garrett C. Parish
garrett@millerfairhenry.com
Texas State Bar No. 24125824
MILLER FAIR HENRY, PLLC
1507 Bill Owens Parkway
Longview, TX 75604
(903) 757-6400 (telephone)
(903) 757-2323 (facsimile)

Attorneys for Plaintiffs
LONGITUDE LICENSING LIMITED and
138 EAST LCD ADVANCEMENTS LIMITED