US010758652B2

(12) **United States Patent**
Ragusa

(10) **Patent No.: US 10,758,652 B2**
(45) **Date of Patent: Sep. 1, 2020**

(54) **SYSTEM AND METHOD FOR COLLECTING PLASMA**

(71) Applicant: **Haemonetics Corporation**, Braintree, MA (US)

(72) Inventor: **Michael Ragusa**, Hingham, MA (US)

(73) Assignee: **Haemonetics Corporation**, Boston, MA (US)

(*) Notice: Subject to any disclaimer, the term of this patent is extended or adjusted under 35 U.S.C. 154(b) by 539 days.

(21) Appl. No.: **15/608,183**

(22) Filed: **May 30, 2017**

(65) **Prior Publication Data**

US 2018/0344910 A1 Dec. 6, 2018

(51) **Int. Cl.**
A61M 1/02 (2006.01)
A61M 1/36 (2006.01)
(Continued)

(52) **U.S. Cl.**
CPC ***A61M 1/024*** (2013.01); ***A61M 1/029*** (2013.01); ***A61M 1/3672*** (2013.01); ***A61M 1/38*** (2013.01);
(Continued)

(58) **Field of Classification Search**
CPC A61M 1/024; A61M 1/029; A61M 1/3672; A61M 1/3693; A61M 1/38; A61M 2202/0415; A61M 2230/207; G01N 15/05; G01N 2015/055; G01N 15/042; G01N 33/86
See application file for complete search history.

(56) **References Cited**

U.S. PATENT DOCUMENTS

1,025,059 A 4/1912 Hatton et al.
1,611,725 A 12/1926 Degerth et al.
(Continued)

FOREIGN PATENT DOCUMENTS

CN 2735985 Y 10/2005
EP 0128683 A2 12/1984
(Continued)

OTHER PUBLICATIONS

Haemonetics Nomogram—Male, 2 pages, May 1990.
(Continued)

Primary Examiner — Leslie R Deak
(74) *Attorney, Agent, or Firm* — McCarter & English LLP; Jonathan C. Lovely

(57) **ABSTRACT**

A method for collecting plasma includes determining the weight and hematocrit of a donor, and inserting a venous-access device into the donor. The method then withdraws blood from the donor through a draw line connected to a blood component separation device, and introduces anticoagulant into the withdrawn blood. The blood component separation device separates the blood into a plasma component and a second blood component, and the plasma component is collected from the blood component separation device and into a plasma collection container. The method may then calculate (1) a percentage of anticoagulant in the collected plasma component, and (2) a volume of pure plasma collected within the plasma collection container. The volume of pure plasma may be based, at least in part, on the calculated percentage of anticoagulant. The method may continue until a target volume of pure plasma is collected within the plasma collection container.

20 Claims, 4 Drawing Sheets

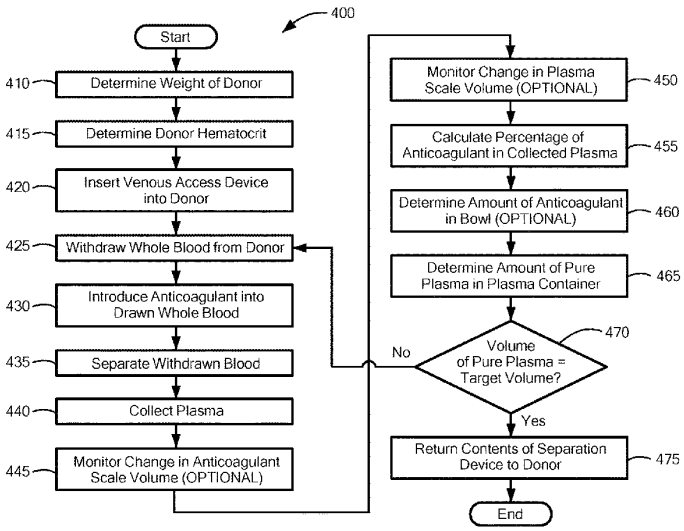

(51) **Int. Cl.**
A61M 1/38 (2006.01)
G01N 15/05 (2006.01)

(52) **U.S. Cl.**
CPC ... *A61M 1/3693* (2013.01); *A61M 2202/0415* (2013.01); *A61M 2230/207* (2013.01); *G01N 15/05* (2013.01); *G01N 2015/055* (2013.01)

(56) **References Cited**

U.S. PATENT DOCUMENTS

2,087,778 A 7/1937 Nelin
2,661,150 A 12/1953 Abbott, Jr.
2,750,107 A 6/1956 More
2,792,172 A 5/1957 Tait
3,096,283 A 7/1963 Hein
3,145,713 A 8/1964 Latham, Jr.
3,239,136 A 3/1966 Hein
3,244,362 A 4/1966 Hein
3,244,363 A 4/1966 Hein
3,409,213 A 11/1968 Latham, Jr.
3,456,875 A 7/1969 Hein
3,489,145 A 1/1970 Judson et al.
3,565,330 A 2/1971 Latham, Jr.
3,655,058 A 4/1972 Novak
3,737,096 A 6/1973 Jones et al.
3,774,840 A 11/1973 Boatright
3,987,961 A 10/1976 Sinn et al.
4,007,871 A 2/1977 Jones et al.
4,010,894 A 3/1977 Kellogg et al.
4,014,497 A 3/1977 Spiewok et al.
4,040,965 A 8/1977 Kohlheb
4,056,224 A 11/1977 Lolachi
4,082,217 A 4/1978 Westberg
4,086,924 A 5/1978 Latham, Jr.
4,140,268 A 2/1979 Lacour
4,142,670 A 3/1979 Ishimaru et al.
4,151,844 A 5/1979 Cullis et al.
4,197,847 A 4/1980 Djerassi
4,285,464 A 8/1981 Latham, Jr.
4,300,717 A 11/1981 Latham, Jr.
4,303,193 A 12/1981 Latham, Jr.
4,321,921 A 3/1982 Laszczower
4,387,848 A 6/1983 Kellogg et al.
4,425,114 A 1/1984 Schoendorfer et al.
4,430,072 A 2/1984 Kellogg et al.
4,447,221 A 5/1984 Mulzet
4,457,747 A 7/1984 Tu
4,464,167 A 8/1984 Schoendorfer et al.
4,466,888 A 8/1984 Verkaart
4,482,342 A 11/1984 Lueptow et al.
4,490,135 A 12/1984 Troutner
4,530,691 A 7/1985 Brown
4,534,863 A 8/1985 Bacon et al.
4,643,714 A 2/1987 Brose
4,647,279 A 3/1987 Mulzet et al.
4,655,742 A 4/1987 Vantard
4,680,025 A 7/1987 Kruger et al.
4,684,361 A 8/1987 Feldman et al.
4,692,136 A 9/1987 Feldman et al.
4,708,712 A 11/1987 Mulzet
4,713,176 A 12/1987 Schoendorfer et al.
4,734,089 A 3/1988 Cullis
4,740,202 A 4/1988 Stacey et al.
4,740,313 A 4/1988 Schoendorfer et al.
4,755,300 A 7/1988 Fischel et al.
4,767,396 A 8/1988 Powers
4,795,419 A 1/1989 Yawn et al.
4,795,448 A 1/1989 Stacey et al.
4,806,247 A 2/1989 Schoendorfer et al.
4,806,252 A 2/1989 Brown et al.
4,808,307 A 2/1989 Fischel et al.
4,850,995 A 7/1989 Tie et al.
4,869,812 A 9/1989 Schoendorfer et al.
4,871,462 A 10/1989 Fischel et al.
4,876,013 A 10/1989 Shmidt et al.
4,889,524 A 12/1989 Fell et al.
4,911,833 A 3/1990 Schoendorfer et al.
4,934,995 A 6/1990 Cullis
4,940,543 A 7/1990 Brown et al.
4,943,273 A 7/1990 Pages
4,968,295 A 11/1990 Neumann
4,983,156 A 1/1991 Knelson
4,983,158 A 1/1991 Headley
4,985,153 A 1/1991 Kuroda et al.
4,994,188 A 2/1991 Prince
5,039,401 A 8/1991 Columbus et al.
5,045,048 A 9/1991 Kaleskas et al.
5,098,372 A 3/1992 Jonsson
5,098,373 A 3/1992 Polaschegg
5,100,372 A 3/1992 Headley
5,100,564 A 3/1992 Pall et al.
5,112,298 A 5/1992 Prince et al.
5,114,396 A 5/1992 Unger et al.
5,135,667 A 8/1992 Schoendorfer
5,141,486 A 8/1992 Antwiler
5,147,290 A 9/1992 Jonsson
5,154,716 A 10/1992 Bauman et al.
5,174,894 A 12/1992 Ohsawa et al.
5,194,145 A 3/1993 Schoendorfer
5,217,426 A 6/1993 Bacehowski et al.
5,217,427 A 6/1993 Cullis
5,234,403 A 8/1993 Yoda et al.
5,254,248 A 10/1993 Nakamura
5,273,517 A 12/1993 Barone et al.
5,277,701 A 1/1994 Christie et al.
5,298,016 A 3/1994 Gordon
5,298,171 A 3/1994 Biesel
5,300,060 A 4/1994 Nelson
5,316,540 A 5/1994 McMannis et al.
5,318,511 A 6/1994 Riquier et al.
5,318,512 A 6/1994 Neumann
5,348,533 A 9/1994 Papillon et al.
5,368,542 A 11/1994 McMannis et al.
5,368,555 A 11/1994 Sussman et al.
5,386,734 A 2/1995 Pusinelli
5,387,174 A 2/1995 Rochat
5,387,187 A 2/1995 Fell et al.
5,403,272 A 4/1995 Deniega et al.
5,405,308 A 4/1995 Headley et al.
5,417,650 A 5/1995 Gordon
5,431,814 A 7/1995 Jorgensen
5,437,598 A 8/1995 Antwiler
5,437,624 A 8/1995 Langley
5,462,667 A 10/1995 Wollinsky et al.
5,470,483 A 11/1995 Bene et al.
5,484,396 A 1/1996 Naficy
5,494,592 A 2/1996 Latham, Jr. et al.
5,505,685 A 4/1996 Antwiler
5,514,070 A 5/1996 Pages
5,543,062 A 8/1996 Nishimura
5,551,941 A 9/1996 Howell
5,585,007 A 12/1996 Antanavich et al.
5,607,579 A 3/1997 Latham, Jr. et al.
5,649,903 A 7/1997 Deniega et al.
5,651,766 A 7/1997 Kingsley et al.
5,656,163 A 8/1997 Brown
5,665,061 A 9/1997 Antwiler
5,712,798 A 1/1998 Langley et al.
5,728,060 A 3/1998 Kingsley et al.
5,733,253 A 3/1998 Headley et al.
5,733,446 A 3/1998 Holm
5,733,545 A 3/1998 Hood, III
5,738,792 A 4/1998 Schoendorfer
5,762,791 A 6/1998 Deniega et al.
5,779,660 A 7/1998 Kingsley et al.
5,783,085 A 7/1998 Fischel
5,792,351 A 8/1998 Wehrle et al.
5,849,203 A 12/1998 Brown et al.
5,882,289 A 3/1999 Sakota et al.
5,906,589 A 5/1999 Gordon et al.
5,919,125 A 7/1999 Berch
5,964,724 A 10/1999 Rivera et al.
5,970,432 A 10/1999 Ishimoto et al.
5,980,760 A 11/1999 Min et al.
6,007,725 A 12/1999 Brown

(56) **References Cited**

U.S. PATENT DOCUMENTS

6,059,979	A	5/2000	Brown
6,207,063	B1	3/2001	Brown
6,234,989	B1	5/2001	Brierton et al.
6,296,602	B1	10/2001	Headley
6,464,624	B2	10/2002	Pages
6,497,676	B1	12/2002	Childers et al.
6,558,307	B2	5/2003	Headley
6,623,443	B1	9/2003	Polaschegg
6,743,192	B1	6/2004	Sakota et al.
7,115,205	B2	10/2006	Robinson et al.
7,186,231	B2	3/2007	Takagi et al.
7,270,645	B2	9/2007	Langley et al.
7,704,454	B1	4/2010	Langley et al.
8,628,489	B2	1/2014	Pages et al.
8,702,637	B2	4/2014	Pages et al.
8,759,094	B2	6/2014	Ranby
2001/0000185	A1	4/2001	Keller et al.
2001/0027156	A1	10/2001	Egozy et al.
2002/0043492	A1	4/2002	Bischof
2002/0062100	A1	5/2002	Pierce et al.
2002/0120227	A1	8/2002	Childers et al.
2003/0055375	A1	3/2003	Holst et al.
2003/0066807	A1	4/2003	Suzuki
2003/0125881	A1	7/2003	Ryan
2003/0175150	A1	9/2003	Grimm
2004/0186409	A1	9/2004	Cavalcanti et al.
2005/0209522	A1	9/2005	Tadokoro et al.
2005/0235733	A1	10/2005	Holst et al.
2006/0058167	A1	3/2006	Ragusa et al.
2006/0155236	A1	7/2006	Gara et al.
2007/0112289	A1	5/2007	Cavalcanti et al.
2008/0146993	A1	6/2008	Krishna
2012/0175313	A1	7/2012	Barry, Jr. et al.
2014/0039373	A1	2/2014	Ragusa et al.
2014/0356851	A1	12/2014	Pages et al.
2018/0344921	A1	12/2018	Ragusa

FOREIGN PATENT DOCUMENTS

EP	0171749	A1	2/1986
EP	0208061	A1	1/1987
EP	257755	A1	3/1988
EP	0578086	A1	1/1994
EP	619145	A2	10/1994
EP	0654277	A1	5/1995
EP	664159	A1	7/1995
EP	799645	A1	10/1997
EP	0885619	A1	12/1998
EP	1057534	A1	12/2000
EP	1295619	A2	3/2003
EP	1374927	A1	1/2004
FR	2258898	A1	8/1975
GB	2047110	A	11/1980
JP	S59-066952		1/1984
JP	S59-069166		4/1984
JP	H02-052665		2/1990
JP	H03-131268		6/1991
JP	H07-075746		3/1995
JP	H08-131539		5/1996
JP	H09-192215		7/1997
JP	2002-291872	A	10/2002
JP	2008-506424	A	3/2008
SU	660718	A1	5/1979
SU	762982	A1	9/1980
SU	1146098	A1	3/1985
WO	WO-1985/02561	A1	6/1985
WO	WO-1990/00059	A1	1/1990
WO	WO-1990/07383	A1	7/1990
WO	WO-1994/06535	A1	3/1994
WO	WO-1996/11747	A2	4/1996
WO	WO-1996/33023	A1	10/1996
WO	WO-2002/05059	A2	1/2002
WO	WO-2007/041716	A1	4/2007

OTHER PUBLICATIONS

Lemmens et al., Estimating blood volume in obese and morbidly obese patients. Obes Surg. Jun. 2006;16(6):773-6.

Nadler et al., Prediction of blood volume in normal human adults. Surgery. Feb. 1962;51(2):224-32.

Winters, Complications of donor apheresis. J Clin Apher. Jul. 2006;21(2):132-41.

International Search Report and Written Opinion for Application No. PCT/US2018/033826, dated Aug. 3, 2018, 10 pages.

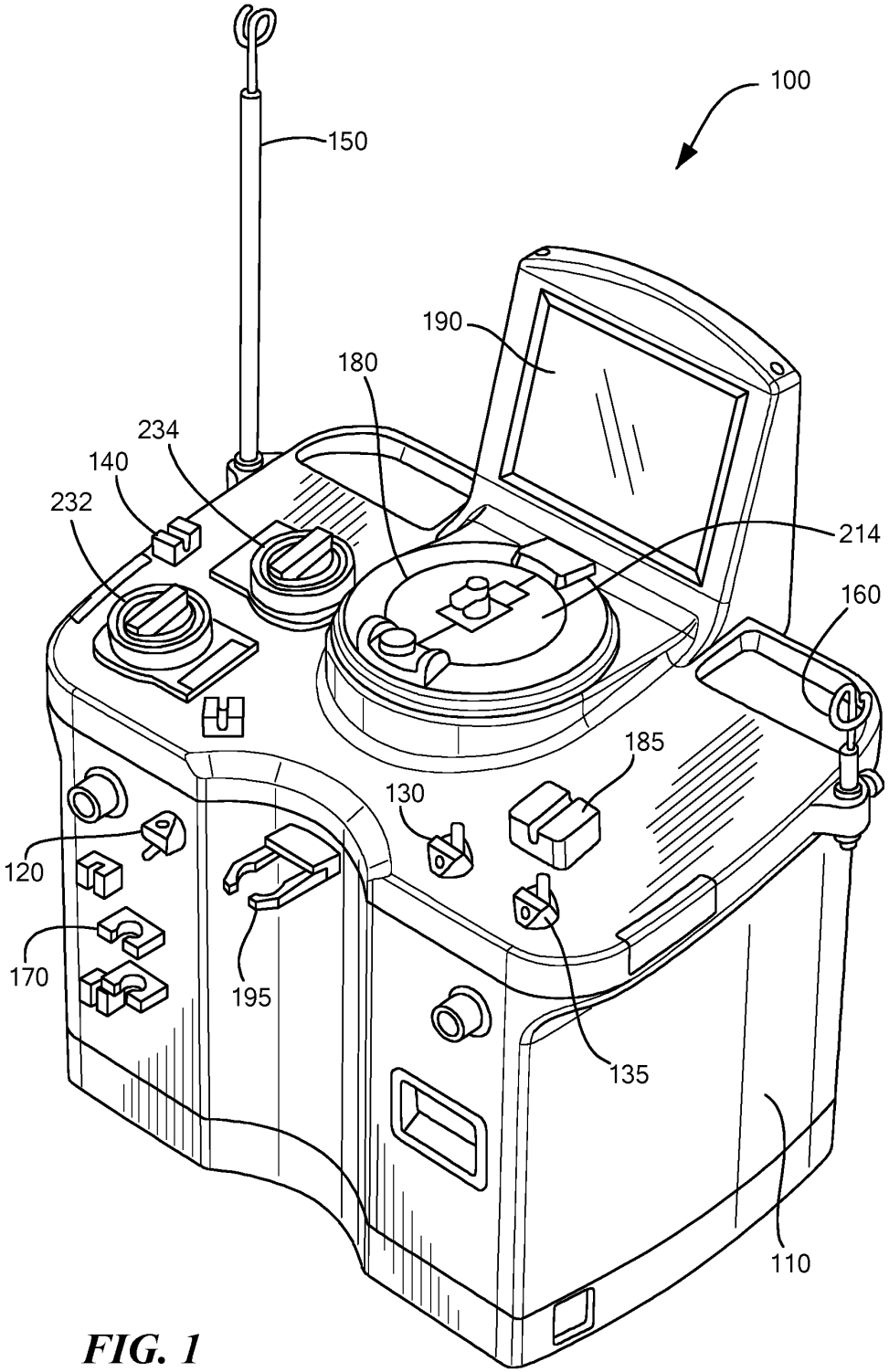

FIG. 1

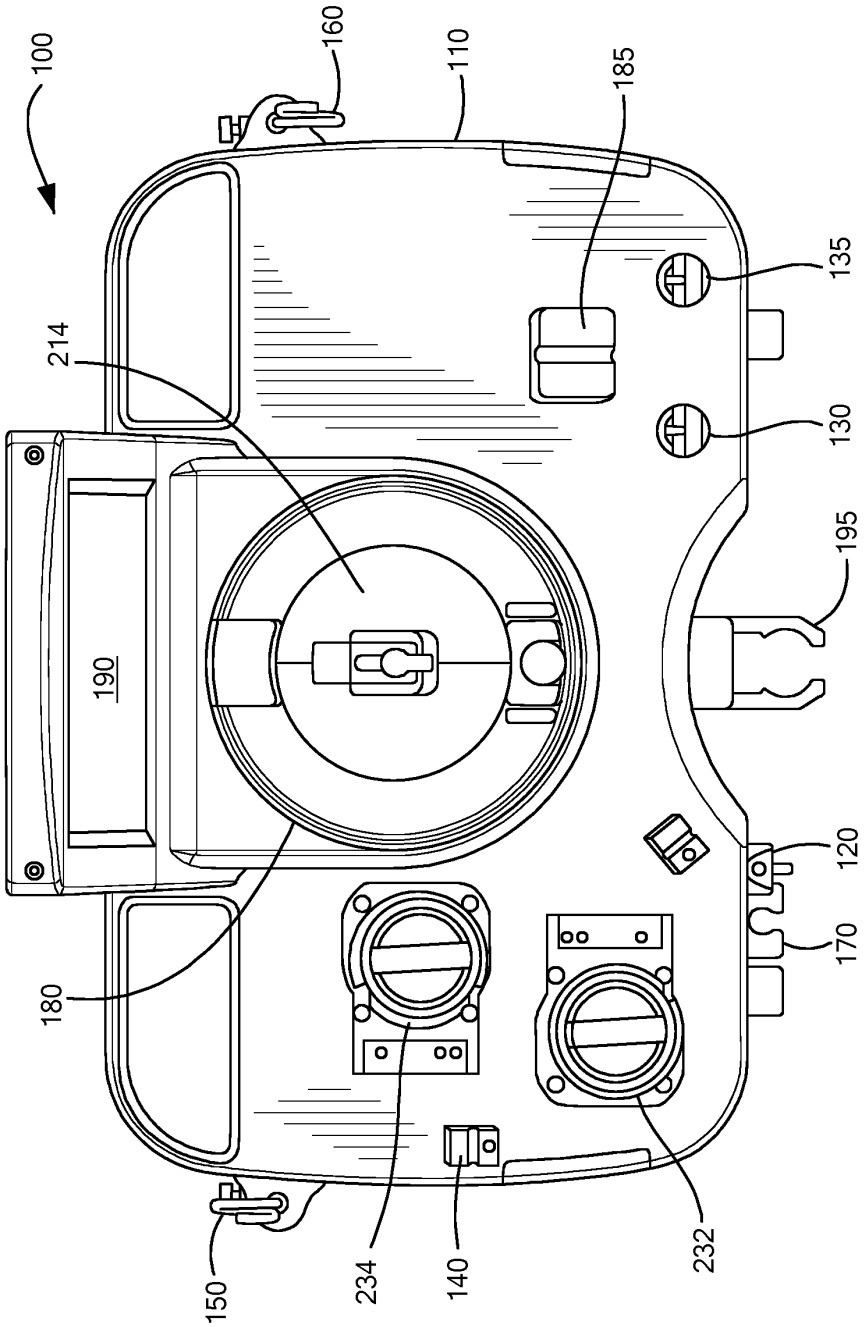

FIG. 2

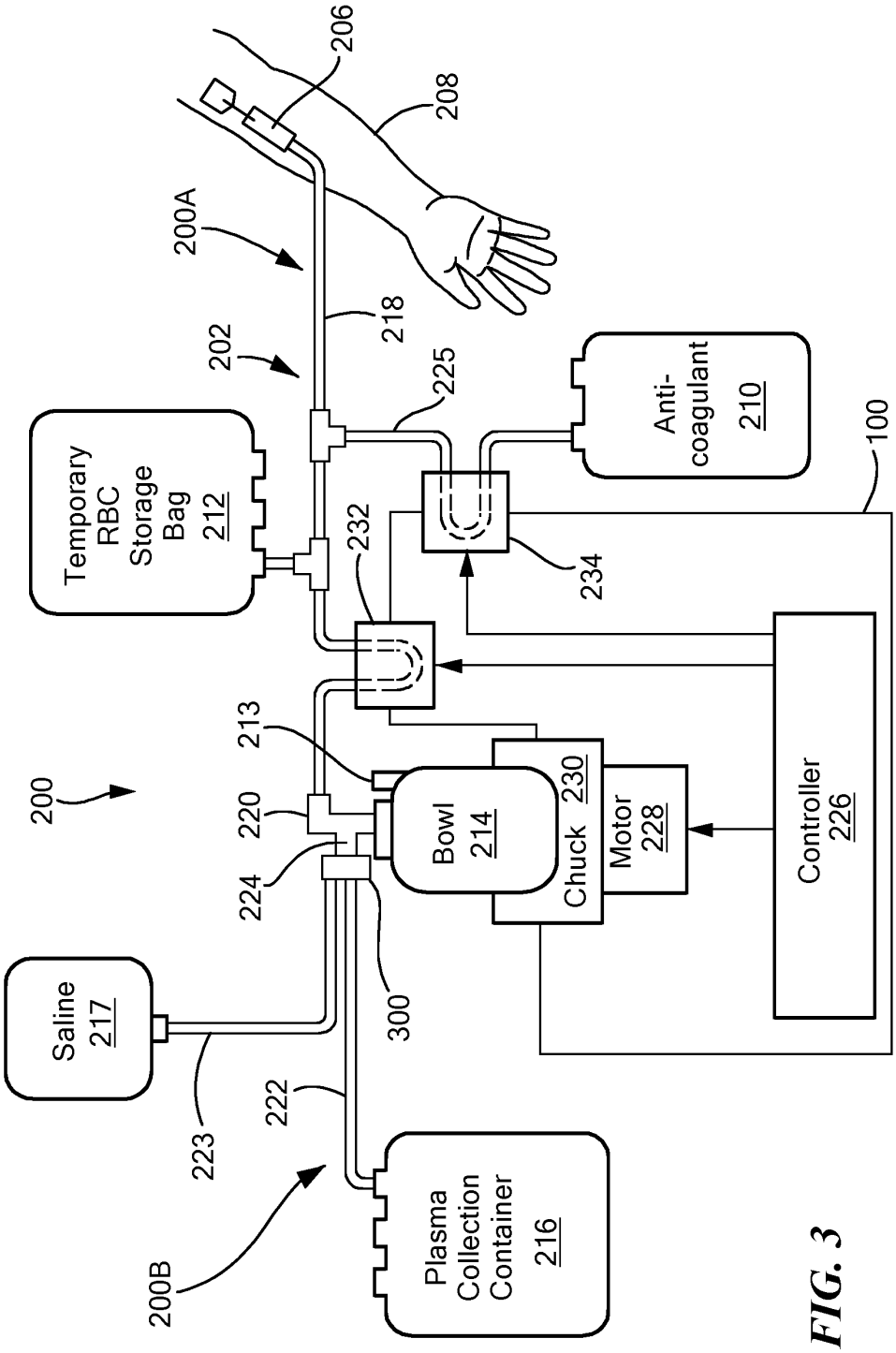
206
208
200A
218
202
225
Temporary RBC Storage Bag 212
Anti-coagulant 210
100
232
234
213
200
220
224
Bowl 214
Chuck 230
Motor 228
Controller 226
Saline 217
300
223
222
200B
Plasma Collection Container 216

FIG. 3

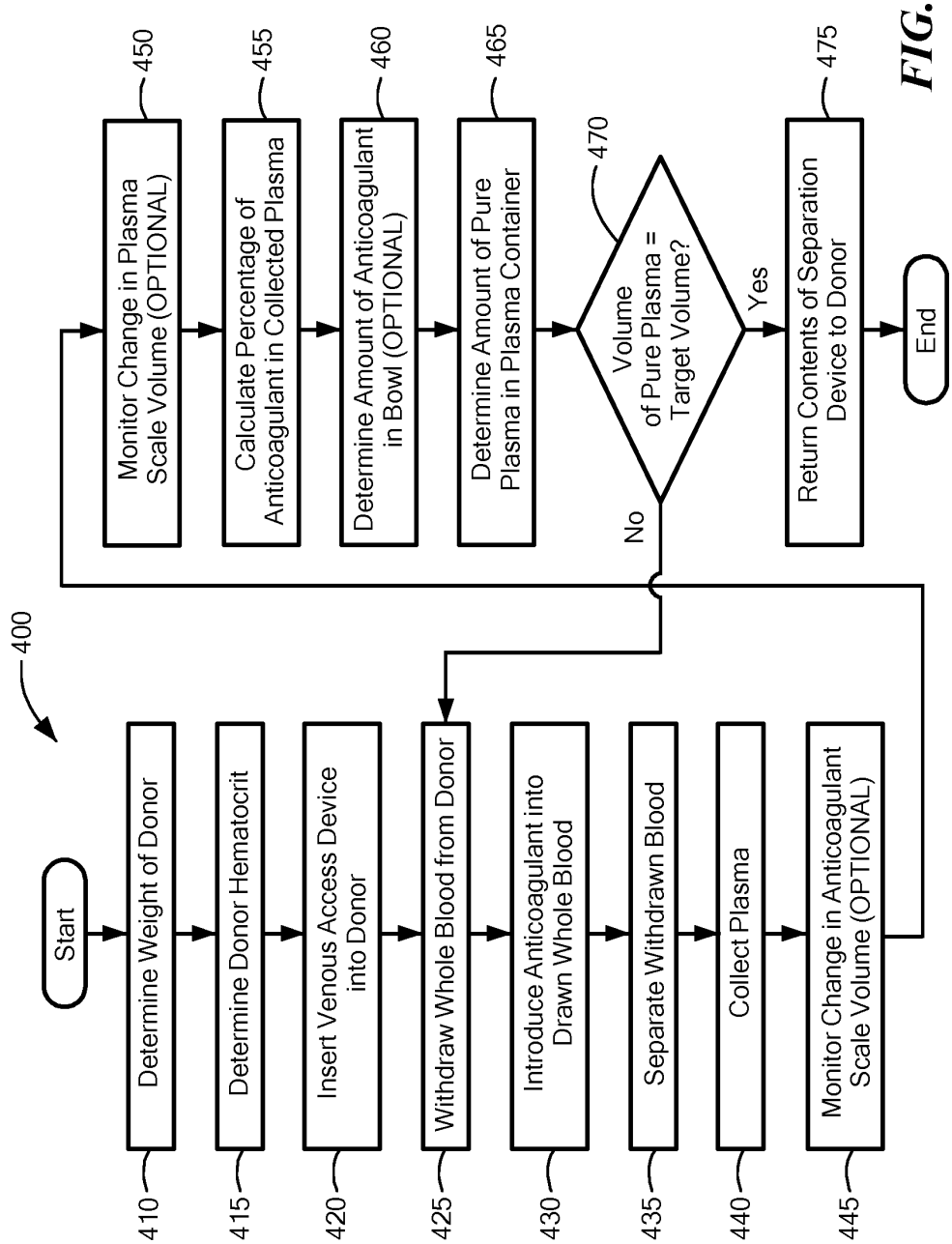
400
Start
Determine Weight of Donor
410
Determine Donor Hematocrit
415
Insert Venous Access Device into Donor
420
Withdraw Whole Blood from Donor
425
Introduce Anticoagulant into Drawn Whole Blood
430
Separate Withdrawn Blood
435
Collect Plasma
440
Monitor Change in Anticoagulant Scale Volume (OPTIONAL)
445
Monitor Change in Plasma Scale Volume (OPTIONAL)
450
Calculate Percentage of Anticoagulant in Collected Plasma
455
Determine Amount of Anticoagulant in Bowl (OPTIONAL)
460
Determine Amount of Pure Plasma in Plasma Container
465
Volume of Pure Plasma = Target Volume?
470
No
Yes
Return Contents of Separation Device to Donor
475
End

FIG. 4

SYSTEM AND METHOD FOR COLLECTING PLASMA

TECHNICAL FIELD

The present invention relates to systems and methods for blood apheresis, and more particularly system and methods for collecting a plasma product.

BACKGROUND ART

Apheresis is a procedure in which individual blood components can be separated and collected from whole blood temporarily withdrawn from a subject. Typically, whole blood is withdrawn through a needle inserted into a vein of the subjects arm and into a cell separator, such as a centrifugal bowl. Once the whole blood is separated into its various components, one or more of the components (e.g., plasma) can be removed from the centrifugal bowl. The remaining components can be returned to the subject along with optional compensation fluid to make up for the volume of the removed component. The process of drawing and returning continues until the quantity of the desired component has been collected, at which point the process is stopped. A central feature of apheresis systems is that the processed but unwanted components are returned to the donor. Separated blood components may include, for example, a high density component such as red blood cells, an intermediate density component such as platelets or white blood cells, and a lower density component such as plasma.

Many jurisdictions have regulations regarding the amount of whole blood and/or blood components that can be removed from a donor. For example, the U.S. Food and Drug Administration ("the FDA") sets both an upper limit on the volume of plasma that may be collected (e.g., 800 ml for an adult weighing more than 175 pounds) as well as an upper limit on the total collection volume (e.g., 880 ml for an adult weighing more than 175 pounds). Prior art plasma collection systems are unable to determine the total volume of plasma that has been collected (e.g., because the product collected is a mixture of plasma and anticoagulant) and, therefore collect based on the total collection volume, even if the total volume of plasma that has been collected is below the limit prescribed by the FDA.

SUMMARY OF THE INVENTION

In accordance with some embodiments of the present invention, a method for collecting plasma includes determining the weight and hematocrit of a donor, and inserting a venous-access device into the donor. Once the venous access device is inserted, the method may withdraw whole blood from the donor through the venous-access device and a draw line that is connected to a blood component separation device. The method may then introduce anticoagulant into the withdrawn whole blood through an anticoagulant line and separate, using the blood component separation device, the withdrawn whole blood into a plasma component and at least a second blood component. Once separated, the plasma component may be collected from the blood component separation device and into a plasma collection container. During processing, the method may calculate (1) a percentage of anticoagulant in the collected plasma component, and (2) a volume of pure plasma collected within the plasma collection container. The volume of pure plasma may be based, at least in part, on the calculated percentage of anticoagulant in the collected plasma component. The

method may continue the process (e.g., withdrawing whole blood, introducing anticoagulant into the whole blood, separating the blood, collecting the plasma, and calculating the percentage of anticoagulant and volume of pure plasma) until a target volume of pure plasma is collected within the plasma collection container.

In some embodiments, the method may determine a change in volume within an anticoagulant container, and the calculated percentage of anticoagulant in the collected plasma may be based, at least in part, on the change in volume within the anticoagulant container. Additionally or alternatively, the method may determine a volume of anticoagulant introduced into the whole blood based on a number of rotations of an anticoagulant pump. In such embodiments, the calculated percentage of anticoagulant in the collected plasma may be based, at least in part, on the number of rotations of the anticoagulant pump. The method may also determine a volume of anticoagulant within the blood component separation device, and the calculated percentage of anticoagulant in the collected plasma may be based, at least in part, on the volume of anticoagulant within the blood component separation device.

In further embodiments, the method may monitor the volume and/or weight of the plasma component collected within the plasma collection container (e.g., using a weight sensor), and the calculated volume of pure plasma collected within the plasma collection device may be based, at least in part, on the monitored volume and/or weight of the collected plasma component. Additionally or alternatively, determining the hematocrit of the donor may include monitoring a volume of red blood cells collection within the blood separation device. In such embodiments, the determined hematocrit of the donor may be based, at least in part, on the monitored volume of red blood cells collected within the blood separation device and the volume of whole blood withdrawn from the donor.

The target volume of pure plasma may be based, at least in part, on the weight of the donor. The percentage of anticoagulant in the collected plasma component may include at least a portion of the anticoagulant introduced into the withdrawn blood and at least a portion of a volume of anticoagulant that is added to the system during a priming step. After collecting at least a portion of the target volume of pure plasma, the method may return the second blood component to the donor through a return line.

In accordance with additional embodiments, a system for collecting plasma includes a venous-access device for drawing whole blood from a subject and returning blood components to the subject, and a blood component separation device for separating the drawn blood into a plasma component and a second blood component. The blood component separation device has an outlet and is configured to send the plasma component to a plasma container. The system may also include a blood draw line fluidly connected to the venous-access device and an anticoagulant line connected to an anticoagulant source. The blood draw line transports drawn whole blood to the blood component separation device, and the flow through the blood draw line may be controlled by a blood draw pump. The anticoagulant line may introduce anticoagulant into the drawn whole blood.

Additionally, the system may include a controller that controls the operation of the centrifuge bowl. The controller may also calculate (1) a percentage of anticoagulant in the collected plasma component, and (2) a volume of pure plasma collected within the plasma container. The volume of pure plasma may be based, at least in part, upon the percentage of anticoagulant in the collected plasma compo-

nent. The controller may stop the blood draw pump when a target volume of pure plasma (e.g., based, at least in part, on the weight of the donor) is collected within the plasma container. In some embodiments, the percentage of anticoagulant in the collected plasma component may be based, at least in part, on the volume of anticoagulant added to the drawn whole blood and the subject's hematocrit.

The system may also include an anticoagulant source weight sensor that measures the weight of the anticoagulant source. The controller may monitor the change in volume within the anticoagulant container based on the measured weight of the anticoagulant source, and the calculated percentage of anticoagulant in the collected plasma may be based, at least in part, on the change in volume within the anticoagulant source. Additionally or alternatively, the controller may monitor the number of rotations of an anticoagulant pump to determine a volume of anticoagulant introduced into the whole blood. In such embodiments, the calculated percentage of anticoagulant in the collected plasma may be based, at least in part, on the number of rotations of the anticoagulant pump.

In some embodiments, the system may include an optical sensor located on the blood component separation device. The optical sensor may monitor the contents of the blood component separation device and determine if a volume of anticoagulant remains within the blood component separation device. The calculated percentage of anticoagulant in the collected plasma may be based, at least in part, on the volume of anticoagulant within the blood component separation device.

In additional embodiments, the system may also include a plasma container weight sensor that monitors a volume and/or weight of the plasma component collected within the plasma collection container. The calculated volume of pure plasma collected within the plasma collection container may be based, at least in part, on the monitored volume and/or weight of collected plasma component. The system may also have an optical sensor located on the blood component separation device. The optical sensor may monitor the volume of red blood cells collected within the blood separation device. The controller may then determine the subject's hematocrit based, at least in part, upon on the monitored volume of red blood cells collected within the blood separation device and the volume of whole blood withdrawn from the donor. The percentage of anticoagulant in the collected plasma component may include at least a portion of the anticoagulant introduced into the withdrawn blood and at least a portion of a volume of anticoagulant added to the system during a priming step.

BRIEF DESCRIPTION OF THE DRAWINGS

The foregoing features of the invention will be more readily understood by reference to the following detailed description, taken with reference to the accompanying drawings, in which:

FIG. **1** schematically shows a perspective view of a blood processing system in accordance with some embodiments of the present invention.

FIG. **2** schematically shows a top view of the blood processing system of FIG. **1**, in accordance with some embodiments of the present invention;

FIG. **3** schematically shows a disposable set installed within the blood processing system of FIG. **1**, in accordance with some embodiments of the present invention.

FIG. **4** is a flowchart depicting a method of collecting plasma, in accordance with embodiments of the present invention.

DETAILED DESCRIPTION OF SPECIFIC EMBODIMENTS

Illustrative embodiments of the present invention provide blood processing systems and methods for collecting a target volume of pure plasma. The system and method calculate a percentage of anticoagulant collected within a plasma collection container (e.g., in addition to the plasma that is collected within the container) based on the amount of anticoagulant added to the system and the hematocrit of the donor. The system/method may then calculate the volume of pure plasma (e.g., plasma without anticoagulant) that has been collected within the container. Details of the illustrative embodiments are discussed below.

As shown in FIGS. **1** and **2**, the blood processing system **100** includes a cabinet **110** that houses the main components of the system **100** (e.g., the non-disposable components). Within the cabinet **110**, the system **100** may include a first/blood pump **232** that draws whole blood from a subject, and a second/anticoagulant pump **234** that pumps anticoagulant through the system **100** and into the drawn whole blood. Additionally, the system **100** may include a number of valves that may be opened and/or closed to control the fluid flow through the system **100**. For example, the system **100** may include a donor valve **120** that may open and close to selectively prevent and allow fluid flow through a donor line **218** (e.g., an inlet line; FIG. **3**), and a plasma valve **130** that selectively prevents and allows fluid flow through an outlet/plasma line **222** (FIG. **3**). Some embodiments may also include a saline valve **135** that selectively prevents and allows saline to flow through a saline line **223**.

To facilitate the connection and installation of a disposable set and to support the corresponding fluid containers, the system **100** may include an anticoagulant pole **150** on which the anticoagulant solution container **210** (FIG. **3**) may be hung, and a saline pole **160** on which a saline solution container **217** (FIG. **3**) may be hung (e.g., if the procedure being performed requires the use of saline). Additionally, in some applications, it may be necessary and/or desirable to filter the whole blood drawn from the subject for processing. To that end, the system **100** may include blood filter holder **170** in which the blood filter (located on the disposable set) may be placed.

As discussed in greater detail below, apheresis systems **100** in accordance with embodiments of the present invention withdraw whole blood from a subject through a venous access device **206** (FIG. **3**) using the blood pump **232**. As the system **100** withdraws the whole blood from the subject, the whole blood enters a blood component separation device **214**, such as a Latham type centrifuge (other type of separation chambers and devices may be used, such as, without limitation, an integral blow-molded centrifuge bowl, as described in U.S. Pat. Nos. 4,983,158 and 4,943,273, which are hereby incorporated by reference). The blood component separation device **214** separates the whole blood into its constituent components (e.g., red blood cells, white blood cell, plasma, and platelets). Accordingly, to facilitate operation of the separation device **214**, the system **100** may also include a well **180** in which the separation device **214** may be placed and in which the separation device **214** rotates (e.g., to generate the centrifugal forces required to separate the whole blood).

To allow the user/technician to monitor the system operation and control/set the various parameters of the procedure, the system **100** may include a user interface **190** (e.g., a touch screen device) that displays the operation parameters, any alarm messages, and buttons which the user/technician may depress to control the various parameters. Additional components of the blood processing system **100** are discussed in greater detail below (e.g., in relation to the system operation).

FIG. **3** is a schematic block diagram of the blood processing system **100** and a disposable collection set **200** (with an inlet disposable set **200**A and an outlet disposable set **200**B) that may be loaded onto/into the blood processing system **100**, in accordance with the present invention. The collection set **200** includes a venous access device **206** (e.g., a phlebotomy needle) for withdrawing blood from a donor's arm **208**, a container of anti-coagulant **210**, a centrifugation bowl **214** (e.g., a blood component separation device), a saline container **217**, and a final plasma collection bag **216**. The blood/inlet line **218** couples the venous access device **206** to an inlet port **220** of the bowl **214**, the plasma/outlet line **222** couples an outlet port **224** of the bowl **214** to the plasma collection bag **216**, and a saline line **223** connects the outlet port **224** of the bowl **214** to the saline container **217**. An anticoagulant line **225** connects the anti-coagulant container **210** to the inlet line **218**. In addition to the components mentioned above and as shown in FIG. **3**, the blood processing system **100** includes a controller **226**, a motor **228**, and a centrifuge chuck **230**. The controller **226** is operably coupled to the two pumps **232** and **234**, and to the motor **228**, which, in turn, drives the chuck **230**. The controller **226** may be operably coupled to and in communication with the user interface **190**.

In operation, the disposable collection set **200** (e.g., the inlet disposable set **200**A and the outlet disposable set **200**B) may be loaded onto/into the blood processing system **100** prior to blood processing. In particular, the blood/inlet line **218** is routed through the blood/first pump **232** and the anticoagulant line **225** from the anti-coagulant container **210** is routed through the anticoagulant/second pump **234**. The centrifugation bowl **214** may then be securely loaded into the chuck **230**. Once the bowl **214** is secured in place, the technician may install the outlet disposable set **200**B. For example the technician may connect a bowl connector **300** to the outlet **224** of the bowl **214**, install the plasma container **216** into the weight senor **195**, run the saline line **223** through valve **135**, and run the plasma/outlet line **222** through valve **130** and the line sensor **185**. Once the disposable set **200** is installed and the anticoagulant and saline containers **210**/**217** are connected, the system **100** is ready to begin blood processing.

FIG. **4** is a flowchart depicting an exemplary method of collecting plasma in accordance with various embodiments of the present invention. Prior to connecting the donor to the blood processing device **100**, it is beneficial (and perhaps necessary in some instances) to obtain/determine some information regarding the donor, namely, the donor's weight (Step **410**) and hematocrit (Step **415**). Not only does this information help determine if the individual is a viable donor and the volumes of blood components that may be withdrawn/collected (e.g., per the FDA guidelines), the hematocrit may be used during processing to help collect a target volume of plasma. The technician may obtain/determine the donor's weight by weighing the donor (e.g., on a scale). To obtain/determine the donor's hematocrit, the technician may draw a blood sample from the donor and test the sample of blood. Additionally or alternatively, as discussed in greater detail below, the system may determine the hematocrit during blood processing. For example, the blood processing device **100** may include a hematocrit sensor (not shown) that determines the hematocrit of the blood flowing into the blood processing device **100** and/or the system **100** may determine the hematocrit based on a volume of red blood cells collected within the bowl **214**.

Once the lines **222**/**223** are in place and the technician has determined the donor's weight and/or hematocrit (if needed), the user/technician may insert the venous access device **206** into the donor's arm **208** (Step **420**). Next, the controller **226** activates the two pumps **232**, **234** and the motor **228**. Operation of the two pumps **232**, **234** causes whole blood to be drawn from the donor (step **425**), anticoagulant from container **210** to be introduced into the drawn whole blood (step **430**), and the now anticoagulated whole blood to be delivered to the inlet port **220** of the bowl **214**.

It should be noted that the anticoagulant line **225** may also include a bacteria filter (not shown) that prevents any bacteria in the anticoagulant source **210**, the anticoagulant, or the anticoagulant line **225** from entering the system **100** and/or the subject. Additionally, the anticoagulant line **225** may include an air detector **140** that detects the presence of air within the anticoagulant. The presence of air bubbles within any of the system **100** lines can be problematic for the operation the system **100** and may also be harmful to the subject if the air bubbles enter the blood stream. Therefore, the air detector may be connected to an interlock that stops the flow within the anticoagulant line **225** in the event that an air bubble is detected (e.g., by stopping the anticoagulant pump **234**), thereby preventing the air bubbles from entering the subject.

As the anti-coagulated whole blood is withdrawn from the subject and contained within the blood component separation device **214**, the blood component separation device **214** separates the whole blood into several blood components (Step **435**). For example, the blood component separation device **214** may separate the whole blood into a first, second, third, and, perhaps, fourth blood component. More specifically, the blood component separation device **214** (and the centrifugal forces created by rotation of the separation device **214**) can separate the whole blood into plasma, platelets, red blood cells ("RBC"), and, perhaps, white blood cells ("WBC"). The higher density component, i.e., RBC, is forced to the outer wall of the bowl **214** while the lower density plasma lies nearer the core. A buffy coat is formed between the plasma and the RBC. The buffy coat is made up of an inner layer of platelets, a transitional layer of platelets and WBC and an outer layer of WBC. The plasma is the component closest to the outlet port and is the first fluid component displaced from the bowl **214** via the outlet port **224** as additional anticoagulated whole blood enters the bowl **214** through the inlet port **220**.

As shown in FIG. **3**, the system **100** may also include an optical sensor **213** that may be applied to a shoulder portion of the bowl **214**. The optical sensor monitors each layer of the blood components as they gradually and coaxially advance toward the core from the outer wall of the bowl **214**. The optical sensor **213** may be mounted in a position (e.g., within the well **180**) at which it can detect the buffy coat and/or the red blood cells reaching a particular radius, and the steps of drawing the whole blood from the subject/donor and introducing the whole blood into the bowl 12 may be altered and/or terminated in response to the detection.

Additionally, in some embodiments, the optical sensor **213** may be used to determine the hematocrit of the donor

during processing. For example, as the bowl **214** fills with red blood cells and the optical sensor **213** detects the layer of red blood cells, the system **100** (e.g., the controller) can determine the volume of red blood cells within bowl **214** based on the location of the red blood cell layer and the fixed/known bowl volume. The system **100** may then calculate the donor hematocrit based on the volume of red blood cells within the bowl and the volume of whole blood that has been processed to that point.

Once the blood component separation device **214** has separated the blood into the various components, one or more of the components can be removed from the blood component separation device **214**. For instance, the plasma may be removed to a plasma container **216** (e.g., a plasma bottle) through line **222** (Step **440**). As noted above, some embodiments of the system **100** may include a weight sensor **195** (FIG. **1**) that measures the amount of plasma collected. The plasma collection process may continue until the a target volume of pure plasma (discussed in greater detail below) is collected within the plasma collection container **216**. Although not shown, if the blood processing system **100** and/or the disposable set **200** include platelet, red blood cell, and/or white blood cell bags, each of the bags/containers may include similar weight sensors (e.g., load cells).

In some embodiments, the system **100** may also include a line sensor **185** (mentioned above) that can determine the type of fluid (e.g., plasma, platelets, red blood cells etc.) exiting the blood component separation device **214**. In particular, the line sensor **185** consists of an LED which emits light through the blood components leaving the bowl **214** and a photo detector which receives the light after it passes through the components. The amount of light received by the photo detector is correlated to the density of the fluid passing through the line. For example, if plasma is exiting the bowl **214**, the line sensor **185** will be able to detect when the plasma exiting the bowl **214** becomes cloudy with platelets (e.g., the fluid existing the bowl **214** is changing from plasma to platelets). The system **100** may then use this information to either stop the removal of blood components from the bowl **214**, stop drawing whole blood from the subject, or redirect the flow by, for example, closing one valve an opening another.

It is important to note that during processing, the osmolarity of the red blood cells prevents the anticoagulant introduced into the whole blood from entering/remaining with the red blood cells (e.g., within the bowl **214**). Rather, the anticoagulant mixes with the plasma component. Therefore, the anticoagulant exits the bowl **214** with the plasma and is collected within collection container **216** along with the plasma. In other words, the weight of the product measured by the weight sensor **195** is the weight of the plasma, as well as any anticoagulant that is mixed with the plasma—the weight provided by the weight sensor **195** is not the weight of pure plasma.

Additionally, whole blood contains a variable amount of plasma, as determined by the donor's hematocrit. The hematocrit for typical donors can vary from 38% to 54%, which means that for 100 ml of whole blood, the volume of plasma can vary from 36 to 62 ml. Furthermore, the amount of anticoagulant added to the withdrawn whole blood is fixed (e.g., it does not depend on the hematocrit of the donor), meaning that the percentage of anticoagulant in the collected plasma may vary from 9.7% to 12.7% for donor hematocrits between 38% to 54%, respectively. Therefore, not only does the volume measured by the weight sensor **195** include the volume of anticoagulant, that volume of anticoagulant may vary from donor to donor based on the hematocrit.

As mentioned above, some embodiments of the present invention continue the blood processing/separation procedure until a target volume of pure plasma (e.g., plasma only—without the volume of any anticoagulant mixed with the plasma included in the target volume) is collected within the plasma collection container **216**. To that end, some embodiments of the present invention may calculate the volume of pure plasma within the plasma collection container **216**. For example, the technician or the system **100** (e.g., the controller) may calculate the percentage of anticoagulant within the collected plasma (Step **455**) (e.g., the plasma contained within the plasma collection container **216**) based on the amount of anticoagulant added/metered into the whole blood and the hematocrit of the donor. The technician and/or system can calculate the percentage of anticoagulant according to the following equation, where AC is the amount of anticoagulant added to the system **100**. As noted above, because the osmolarity of the red blood cells prevents the anticoagulant from mixing with it, essentially all of the anticoagulant exits the bowl **214** and is collected within the plasma collection container **216** along with the plasma.

$$\% AC = \frac{1}{1 + (AC - 1)(1 - Hct_D)}$$

The amount of anticoagulant that is added to the system **100** can be determined in a number of ways. For example, the system **100** can base the amount of anticoagulant (e.g., the value of "AC" in the above equation) on the predetermined ratio of anticoagulant per unit of anticoagulated whole blood. In some embodiments, the value of "AC" may be the inverse of the predetermined ratio (e.g., "AC" would be 16 if the ratio of anticoagulant to anticoagulated whole blood was 1:16). Additionally or alternatively, the technician/system **100** can monitor the volume of anticoagulant added to the system. In such embodiments, the technician/system can monitor the volume of anticoagulant added to the system **100** based on the number of rotations of the anticoagulant pump (e.g., each rotation of the anticoagulant pump introduces a set volume of anticoagulant into the system **100**) and/or based on the change in weight of the anticoagulant container **210** as measured by a weight sensor (discussed in greater detail below).

Once the technician/system **100** has calculated the percentage of anticoagulant within the plasma collection container **216**, the technician/system **100** may then use this information to calculate the volume of pure plasma within the plasma collection container **216** (Step **465**). For example, the technician/system **100** may determine the volume of anticoagulant within the container (based on the percentage of anticoagulant within the container **216**) and subtract this volume from the total volume of fluid within the container **216** as measured by the weight sensor **195**. The system **100** may continue to monitor the volume of pure plasma collected within the container **216** and continue processing whole blood (e.g., continue performing Steps **425**, **430**, **435**, **440**, **455**, **460** and **465**) until a target volume of pure plasma is collected within the plasma collection container **216** (Step **470**) (e.g., 800 mL for an adult donor weighing more than 175 pounds or other limit prescribed by the FDA or similar governing body).

Once the system **100** has collected the target volume of pure plasma within the plasma collection container **216**, the system **100** can return the remaining components (e.g., the

components remaining within the bowl **214**) to the subject (Step **475**). For example, when all the plasma has been removed and the bowl **214** is full of RBCs (and any other blood component not collected), the controller **226** stops the draw of whole blood from the subject and reverses the direction of the blood/first pump **232** to draw the RBCs (and other components) from the bowl **214** directly back to the subject. Alternatively, if the system **100** is so equipped, the system may return the components to the subject via a dedicated return line.

In addition to the non-collected blood components (e.g., the components remaining in the bowl **214**), the system **100** may also return saline to the patient/subject. The saline may be used as a compensation fluid to make up for the volume of the blood component (e.g., plasma) that was removed and collected, and is not being returned to the patient. To that end, during the return step (e.g., Step **475**), the saline valve **135** may be opened to allow saline from the saline container **217** to flow through the saline line **223** and into the howl **214** (via outlet **224**), where it can be returned to the patient/donor with or after the remaining blood components.

It should be noted that some embodiments may perform some additional and optional steps to help determine the volume of pure plasma within the plasma collection container **216**. For example, as mentioned above, some embodiments may monitor the change in weight of the anticoagulant container **210** (e.g., as measured by a weight sensor/load cell on the anticoagulant container **210**) (step **445**). This measurement provides an indication of the volume of anticoagulant that has been added to the system **100**, and may be used help determine the percentage of anticoagulant within the plasma collection container **216**. Additionally or alternatively, some embodiments may similarly, monitor the change in weight and/or volume of the plasma and anticoagulant collected within the plasma collection container **216** (e.g., via weight sensor **195**) (step **450**). This measurement may be used to calculate of the total volume of pure plasma collected within the plasma collection container **216** (e.g., to obtain the total weight from which to subtract the calculated volume of anticoagulant).

Some embodiments may also (optionally) monitor the volume of anticoagulant remaining in the bowl **214** (step **460**) (e.g., anticoagulant that did not mix with the plasma and/or otherwise remained in the bowl). For example, the system **100** may utilize the optical sensor on the bowl **214** to determine whether any anticoagulant remains within the bowl **214**. If it does, the method **400**/system **100** may modify the calculation of the amount of pure plasma collected within the plasma collection container (e.g., either increase the calculated amount or decreased the calculated amount), based on the volume of anticoagulant remaining within the bowl **214**.

Various embodiment of the present invention provide numerous benefits over prior art plasma collection systems. In particular, as noted above, prior art plasmapheresis devices end plasma collection based on a total volume of anticoagulated plasma (e.g., pure plasma plus the added anticoagulant). Although this is the easiest method because it requires only that the product collection container be weighed, the amount of true product—the pure plasma—is dependent on the donor's hematocrit. In other words, prior art systems will collect more plasma from low hematocrit donors than from high hematocrit donors because of the variation of the percentage of anticoagulant in the product. Various embodiments of the present invention address the issues of prior art systems by collecting a standard volume (e.g., a target volume) of pure plasma from each donor. As noted above, embodiments of the present invention accomplish this by using knowledge of the donor's hematocrit and the amount of anticoagulant collected within the plasma collection container **216** (e.g., by counting pump rotations and/or using scale/weight sensors, etc.) to determine the percentage of anticoagulant in the product. Additionally, by stopping the plasma collection process based on a volume of pure plasma collected, embodiments of the present invention are able to collect a greater volume of plasma as compared to prior art systems that stop based on a plasma/anticoagulant mixture.

It is also important to note that, although the various embodiments discussed above are in relation to a blood processing system that collects plasma, the features discussed herein may be applied to any type of blood processing system. For example, the features described herein may be implemented on blood processing systems that collect and/or process red blood cells, platelets and/or white blood cells.

The embodiments of the invention described above are intended to be merely exemplary; numerous variations and modifications will be apparent to those skilled in the art. All such variations and modifications are intended to be within the scope of the present invention as defined in any appended claims.

What is claimed is:

1. A method for collecting plasma comprising:
(a) determining a weight of a donor;
(b) determining a hematocrit of the donor;
(c) inserting a venous-access device into the donor;
(d) withdrawing whole blood from the donor through the venous-access device and a draw line, the draw line connected to a blood component separation device;
(e) introducing anticoagulant into the withdrawn whole blood through an anticoagulant line;
(f) separating the withdrawn whole blood into a plasma component and at least a second blood component using the blood component separation device;
(g) collecting the plasma component from the blood component separation device and into a plasma collection container;
(h) calculating a volume of anticoagulant in the collected plasma component as the plasma component is being collected in the plasma collection container;
(i) calculating a volume of pure plasma collected within the plasma collection container based, at least in part, on the calculated volume of anticoagulant in the collected plasma component; and
(j) continuing steps (d) through (i) until a target volume of pure plasma is collected within the plasma collection container.

2. A method according to claim **1**, further comprising:
determining a change in volume within an anticoagulant container, the calculated volume of anticoagulant in the collected plasma component being based, at least in part, on the change in volume within the anticoagulant container.

3. A method according to claim **1**, further comprising:
determining a volume of anticoagulant introduced into the whole blood based on a number of rotations of an anticoagulant pump, the calculated volume of anticoagulant in the collected plasma component being based, at least in part, on the number of rotations of the anticoagulant pump.

4. A method according to claim **1**, further comprising:
determining a volume of anticoagulant within the blood component separation device, the calculated volume of

anticoagulant in the collected plasma component being based, at least in part, on the volume of anticoagulant within the blood component separation device.

5. A method according to claim **1**, further comprising:

monitoring a volume of plasma component collected within the plasma collection container, the calculated volume of pure plasma collected within the plasma collection container based, at least in part, on the monitored volume of collected plasma component.

6. A method according to claim **1**, further comprising:

monitoring a weight of plasma component collected within the plasma collection container, the calculated volume of pure plasma collected within the plasma collection container based, at least in part, on the monitored weight of collected plasma component.

7. A method according to claim **1**, wherein step (b) includes monitoring a volume of red blood cells collected within the blood component separation device, the determined hematocrit of the donor based, at least in part, on the monitored volume of red blood cells collected within the blood component separation device and a volume of whole blood withdrawn from the donor.

8. A method according to claim **1**, wherein the target volume of pure plasma is based, at least in part, on the weight of the donor.

9. A method according to claim **1**, wherein the volume of anticoagulant in the collected plasma component includes at least a portion of the anticoagulant introduced into the withdrawn blood and at least a portion of a volume of anticoagulant added during a priming step.

10. A method according to claim **1**, further comprising:

returning, after collecting at least a portion of the target volume of pure plasma, the second blood component to the donor through a return line.

11. A system for collecting plasma comprising:

a venous-access device for drawing whole blood from a subject and returning blood components to the subject;

a blood component separation device for separating the drawn blood into a plasma component and a second blood component, the blood component separation device having an outlet and being configured to send the plasma component to a plasma container;

a blood draw line fluidly connected to the venous-access device and configured to transport drawn whole blood to the blood component separation device, the flow through the blood draw line being controlled by a blood draw pump;

an anticoagulant line connected to an anticoagulant source, the anticoagulant line configured to introduce anticoagulant into the drawn whole blood; and

a controller configured to control the operation of the blood component separation device and the blood draw pump, the controller configured to calculate (1) a volume of anticoagulant in the collected plasma component as the plasma component is being collected in the plasma container, and (2) a volume of pure plasma collected within the plasma container based, at least in part, upon the volume of anticoagulant in the collected plasma component, the controller configured to stop the blood draw pump when a target volume of pure plasma is collected within the plasma container.

12. A system according to claim **11**, wherein the volume of anticoagulant in the collected plasma component is based, at least in part, on a volume of anticoagulant added to the drawn whole blood and the subject's hematocrit.

13. A system according to claim **11**, further comprising:

an anticoagulant source weight sensor configured to measure the weight of the anticoagulant source, the controller further configured to monitor a change in volume within the anticoagulant source based on the measured weight of the anticoagulant source, the calculated volume of anticoagulant in the collected plasma component being based, at least in part, on the change in volume within the anticoagulant source.

14. A system according to claim **11**, wherein the controller is configured to monitor a number of rotations of an anticoagulant pump to determine a volume of anticoagulant introduced into the whole blood, the calculated volume of anticoagulant in the collected plasma component being based, at least in part, on the number of rotations of the anticoagulant pump.

15. A system according to claim **11**, further comprising:

an optical sensor located on the blood component separation device and configured to monitor the contents of the blood component separation device and determine if a volume of anticoagulant remains within the blood component separation device, the calculated volume of anticoagulant in the collected plasma component being based, at least in part, on the volume of anticoagulant within the blood component separation device.

16. A system according to claim **11**, further comprising:

a plasma container weight sensor configured to monitor a volume of plasma component collected within the plasma container, the calculated volume of pure plasma collected within the plasma component based, at least in part, on the monitored volume of collected plasma component.

17. A system according to claim **11**, further comprising:

a plasma container weight sensor configured to monitor a weight of plasma component collected within the plasma container, the calculated volume of pure plasma collected within the plasma component based, at least in part, on the monitored weight of collected plasma component.

18. A system according to claim **11**, further comprising:

an optical sensor located on the blood component separation device and configured to monitor a volume of red blood cells collected within the blood component separation device, the controller configured to determine the subject's hematocrit based, at least in part, upon on the monitored volume of red blood cells collected within the blood component separation device and a volume of whole blood withdrawn from the subject.

19. A system according to claim **11**, wherein the target volume of pure plasma is based, at least in part, on the weight of the subject.

20. A system according to claim **11**, wherein the volume of anticoagulant in the collected plasma component includes at least a portion of the anticoagulant introduced into the withdrawn blood and at least a portion of a volume of anticoagulant added during a priming step.

* * * * *