QUINN EMANUEL URQUHART & SULLIVAN, LLP
David M. Grable (SBN 237765)
davegrable@quinnemanuel.com
Lauren Lindsay (SBN 280516)
laurenlindsay@quinnemanuel.com
865 South Figueroa Street, 10th Floor
Los Angeles, California 90017-2543
Telephone: (213) 443-3000
Facsimile: (213) 443-3100

QUINN EMANUEL URQUHART & SULLIVAN, LLP
Eric Huang (*pro hac vice*)
erichuang@quinnemanuel.com
Jason Williams (*pro hac vice*)
jasonwilliams@quinnemanuel.com
295 5th Avenue
New York, NY 10016-7103
Telephone: (212) 849-7000
Facsimile: (212) 849-7100

Attorneys for Plaintiff
Harbor Freight Tools USA, Inc.

UNITED STATES DISTRICT COURT
CENTRAL DISTRICT OF CALIFORNIA, WESTERN DIVISION

HARBOR FREIGHT TOOLS USA, INC., Plaintiff, vs. CHAMPION POWER EQUIPMENT, INC., Defendant.	Case No. 2:24-cv-08722-SVW-AS **HARBOR FREIGHT'S RESPONSIVE CLAIM CONSTRUCTION BRIEF** Hearing Date: September 30, 2025 Time: 9:30 a.m.

TABLE OF CONTENTS

Page

I. LEGAL STANDARDS 1

II. DISPUTED TERMS 3

A. Individual Terms Requiring Construction 4

1. "selector switch" 4

2. "valve assembly" 7

3. "a mechanical fuel valve" 9

4. "fuel lockout apparatus" 10

5. "from coupling"/"coupling"/"to couple" 13

6. "communicate"/"communication" 16

7. "switch . . . to [enable changing/change] operation of the engine between gaseous fuel and liquid fuel" 17

8. "rotating mechanical valve" 17

9. "pressure regulator" 18

10. "integral components of" 19

B. Indefinite Terms 21

1. "gaseous cutoff" 21

2. "coupled to [verb]" 23

III. CONCLUSION 25

TABLE OF AUTHORITIES

Page

Cases

ActiveVideo Networks, Inc. v. Verizon Commc'ns, Inc.,
694 F.3d 1312 (2012) 2

Baldwin Graphic Sys., Inc. v. Siebert, Inc.,
512 F.3d 1338 (Fed. Cir. 2008) 9

BASF Agro B.V. v. Makhteshim Agan of N. Am.,
519 F. App'x 1008 (Fed. Cir. 2013) 2

Clearstream Wastewater Sys., Inc. v. Hydro-Action, Inc.,
206 F.3d 1440 (Fed. Cir. 2000) 3

Curtiss-Wright Flow Control Corp. v. Velan, Inc.,
438 F.3d 1374 (Fed. Cir. 2006) 3

Douglas Dynamics, LLC v. Buys Products Co.,
No. 09-cv-261-bbc, 2010 WL 744253 (W.D. Wis. Mar. 2, 2010) 4, 17

Fintiv, Inc. v. PayPal Holdings, Inc.,
134 F.4th 1377 (Fed. Cir. 2025) 21

InterDigital Commc'ns., LLC v. ITC,
690 F.3d 1318 (Fed. Cir. 2012) 3, 11

IQRIS Techs. LLC v. Huawei Techs. Co
130 F.4th 988 (Fed. Cir. 2025) 8

KCJ Corp. v. Kinetic Concepts, Inc.,
223 F.3d 1351 (Fed. Cir. 2000) 9

Laitram, LLC v. Ashworth Bros.,
No. 2022-1044, 2023 WL 3449148 (Fed. Cir. May 15, 2023) 3, 8

Nautilus, Inc. v. Biosig Instruments, Inc.,
572 U.S. 898 (2014) 23

O2 Micro Int'l Ltd. v. Beyond Innovation Tech. Co.,
521 F.3d 1351 (Fed. Cir. 2008) 1

Phillips v. AWH Corp.,
415 F.3d 1303 (Fed. Cir. 2005) 2

Promptu Sys. Corp. v. Comcast Corp.,
92 F.4th 1372 (Fed. Cir. 2024) 1, 2

Retractable Techs., Inc. v. Becton, Dickinson & Co.,
653 F.3d 1296 (Fed. Cir. 2011) 3, 8

Robert Bosch, LLC v. Snap-On Inc.,
769 F.3d 1094 (Fed. Cir. 2014) 21

Summit 6, LLC v. Samsung Elecs. Co., Ltd.,
802 F.3d 1283 (Fed. Cir. 2015) 2

Wenger Mfg., Inc. v. Coating Mach. Sys., Inc.,
239 F.3d 1225 (Fed. Cir. 2001) 11

Williamson v. Citrix Online, LLC,
792 F.3d 1339 (Fed. Cir. 2015) 10

Statutes

35 U.S.C. § 112(d) 8

35 U.S.C. § 112(f) 10, 11

Plaintiff Harbor Freight Tools USA, Inc. ("HFT") respectfully submits its response to Champion Power Equipment, Inc. ("Champion") on claim construction. Champion's brief fails to account for the constraining effect of the specification, prosecution history, and claim language.

As explained in HFT's opening brief (Dkt. 84), the disputed terms require construction because the parties fundamentally dispute their meaning, *O2 Micro Int'l Ltd. v. Beyond Innovation Tech. Co*., 521 F.3d 1351, 1360 (Fed. Cir. 2008), and the terms are each either defined in the patents or narrowed through disclaimer by the patentees. Furthermore, two terms are indefinite. Champion's repeated invocation of "plain and ordinary meaning" neither erases nor resolves the actual disputes between the parties regarding claim scope. *See O2 Micro*, 521 F.3d at 1360-63.

The intrinsic evidence—including Champion's own prosecution statements—and expert testimony support HFT's constructions and reflect what Champion's inventors actually disclosed and claimed during patent prosecution. Respectfully, the Court should construe the disputed terms in line with HFT's proposals, which give proper consideration to the intrinsic evidence.

I. LEGAL STANDARDS

Champion misapplies basic claim construction principles in several ways. First, Champion suggests that its repeated invocation of "plain and ordinary meaning" means this Court need not resolve the clear and fundamental dispute between the parties. Dkt. 83, at 3-4. However, the law is clear that "[w]hen the parties present a fundamental dispute regarding the scope of a claim term [not just meaning of the claim], it is the court's duty to resolve it." *O2 Micro*, 521 F.3d at 1362. Champion quotes and features ***dicta*** from the Federal Circuit in *Promptu Sys. Corp. v. Comcast Corp.*, 92 F.4th 1372, 1380 (Fed. Cir. 2024) to suggest that not every disputed claim term requires construction. In *Promptu*, however, the Federal Circuit had already rejected the district court's construction of "back channel," remanding to consider the intrinsic evidence. *Id.* The Court refused to resolve a separate dispute regarding the

word "channel" in the disputed claim term, noting that "[w]e leave this dispute to be addressed, if necessary on, remand." *Id.* It is in this context that the Court's dicta arises. In *Summit 6, LLC v. Samsung Elecs. Co., Ltd.*, 802 F.3d 1283, 1291 (Fed. Cir. 2015), the Federal Circuit noted the disputed term did not have a special meaning and thus the district court resolved the dispute by rejecting the proposed construction. In *ActiveVideo Networks, Inc. v. Verizon Commc'ns, Inc.*, 694 F.3d 1312, 1325-1326 (2012), the district court similarly rejected a proposed claim construction of the term "superimposing" by relying on the intrinsic evidence but in doing so, the Federal Circuit noted, it resolved the construction. Here, unlike *Summit 6* and *ActiveVideo,* the claim terms have special meanings defined by the patentee during prosecution or are subject to disclaimers inconsistent with common understanding that require construction.

Second, Champion incorrectly argues that "[i]f a claim term has a plain and ordinary meaning, our inquiry ends." Dkt. 83, at 5 (quoting *BASF Agro B.V. v. Makhteshim Agan of N. Am.*, 519 F. App'x 1008, 1015 (Fed. Cir. 2013)). This characterization (and the partial quote from *BASF*) dismisses the importance of intrinsic evidence. The full quote from *BASF* is:

> We presume that the terms in the claim means what they say. ***We interpret the claim's words 'in light of the intrinsic evidence of record, including the written description, the drawings, and the prosecution history.*** If a claim term has a plain and ordinary meaning, our inquiry ends.

BASF, 519 F. App'x at 1015 (emphasis added). Thus, although the claims are an important starting point, the Court must construe claim terms in light of the specification and prosecution history as well. *See Phillips v. AWH Corp.*, 415 F.3d 1303, 1313 (Fed. Cir. 2005). In fact, the court in *BASF* looked to the specification and the file history to construe the claims consistent with a clear disclaimer of scope by the patentee. *See BASF*, 519 F. App'x at 1016-1017.

Third, although the doctrine of claim differentiation is a vehicle for claim construction, it is not a rigid rule and the presumption is "overcome by a contrary construction dictated by the written description or prosecution history." *Retractable Techs., Inc. v. Becton, Dickinson & Co.*, 653 F.3d 1296, 1305 (Fed. Cir. 2011); *Laitram, LLC v. Ashworth Bros.*, No. 2022-1044, 2023 WL 3449148, at *4 (Fed. Cir. May 15, 2023) ("Similarly, our claim differentiation doctrine is not a rigid rule and should not be used to overcome the specification's description of a term."). Indeed, the doctrine of claim differentiation "cannot be used to make a claim broader than what is contained in the written description." *Clearstream Wastewater Sys., Inc. v. Hydro-Action, Inc.*, 206 F.3d 1440, 1446 (Fed. Cir. 2000); *see also Curtiss-Wright Flow Control Corp. v. Velan, Inc.*, 438 F.3d 1374, 1381 (Fed. Cir. 2006) (rejecting claim differentiation because applying the "presumption in this case" was inconsistent with the "overall context of this invention" and "the specification"). As Champion recognizes, the presumption is strong only in a specific situation—*e.g.,* when "the limitation in dispute is the only meaningful difference between an independent and dependent claim"—which is not present here. *InterDigital Commc'ns., LLC v. ITC*, 690 F.3d 1318, 1324-1325 (Fed. Cir. 2012) (citation omitted).

II. DISPUTED TERMS

Champion's brief not only fails to justify its position of "plain and ordinary meaning" or the alternatives it proposes, but more fundamentally, Champion does not account for the relevant intrinsic evidence, including disclaimers in prosecution and clear statements in the specification that support HFT's construction.

A. Individual Terms Requiring Construction

1. "selector switch"

HFT's Proposed Construction	Champion's Proposed Construction
"a movable component whose positioning enables subsequent user selection of only one fuel source"	Plain and ordinary meaning or "a device or mechanism for choosing an option or a device or mechanism for making a selection or choice"[1]

Champion's assertion that "selector switch" should be given its plain and ordinary meaning is contradicted by its own proposed alternative construction, which bears no resemblance to the common understanding of "switch." *See* Dkt. 84, at 6-9. Champion compounds this contradiction by citing authority that directly supports HFT's position on the common understanding. *See Douglas Dynamics, LLC v. Buys Products Co.*, No. 09-cv-261-bbc, 2010 WL 744253, at *10 (W.D. Wis. Mar. 2, 2010) (cited at Dkt. 83 at 8). In *Douglas Dynamics*, the court recognized that the common understanding of "switch" means "a device for making and breaking the connection in an electric circuit," citing the dictionary definition. *Id.*

As previously explained, the "selector switch" described in the '101, '667, '390, and '896 patents clearly contradicts this ordinary meaning of "switch" because the "selector switch" is neither part of nor controls an electrical circuit. Dkt. 84-3, ¶ 50.

Champion further errs by asserting that "HFT's proposed construction … does not find support in the specifications." Dkt. 83 at 7. The record demonstrates ample specification support. Dkt. 84, at 6-8. Champion simply chooses to ignore it. Indeed, Dr. William Singhose, its technical expert, confirmed during deposition that the specific disclosure cited by HFT (including the figures) supports HFT's construction:

[1] Champion's alternative is phrased in its argument as what the plain and ordinary meaning should "include."

> Q. Okay. So with respect to the selector switch, the patent describes, with respect to figure five, at column five, line 51, "***the selector switch 30 is translatable*** in a horizontal motion via a sliding motion within slots 44 of the selector plate 28 from the first position 56, figure five, to the second position, 58, figure six, to selectively restrict actuation of the first and second fuel valve handles, 34, 38." First, did I read that correctly?
> A. Yes.
>
> Q. All right. So when this sentence in the patent uses the word translatable in a horizontal motion, what is your understanding of what translatable in a horizontal motion means?
> A. Well, ***translate means to move***.
>
> Q. Okay.
> A. Horizontal generally means side to side if we're all sort of standing upright in a gravity field. So this would basically be something that slides left to right as you're looking at it or operating it.

Ex. K, Singhose Dep. Tr., Sept. 11, 2025, at 35:10-36:13 (emphasis added) (addressing '101 patent specification and Figs. 5, 6).

> Q. Okay. All right. And when it says to selectively restrict actuation, so that means selectively restrict movement. Is that right?
> A. Yeah. In this particular case, you could say it's movement ***because those valves need to physically move to open and close***. So in this particular embodiment I would say that's a fair assessment of what that means.

Id., at 39:12-22 (addressing '101 patent specification and Figs. 5, 6).

> Q. Okay. So when it says selectively restrict actuation, part of that is whether or not you can even access the handle. Right? ***You can't access 38 if you're in the first position in figure five***. Right?
> A. That is correct. That's ***blocking the user from actuating it***.
>
> Q. Right. And then in figure six, that ***second position*** for the selector switch 30 is on the left, so you no longer can access handle 34 in that position.
> A. That's correct. ***The user cannot actuate or turn 34***.

Id., at 40:10-24 (addressing '101 patent specification and Figs. 5, 6).

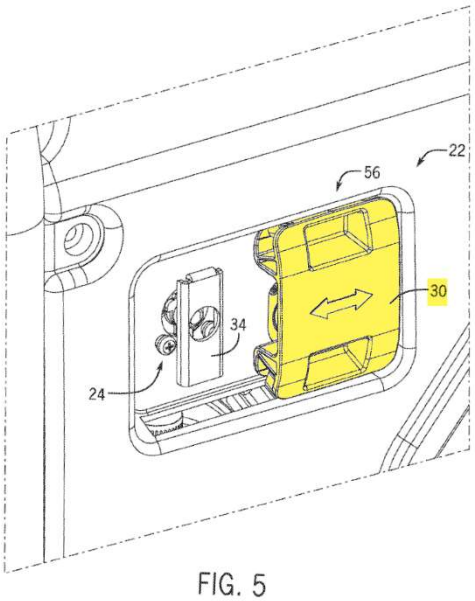

FIG. 5

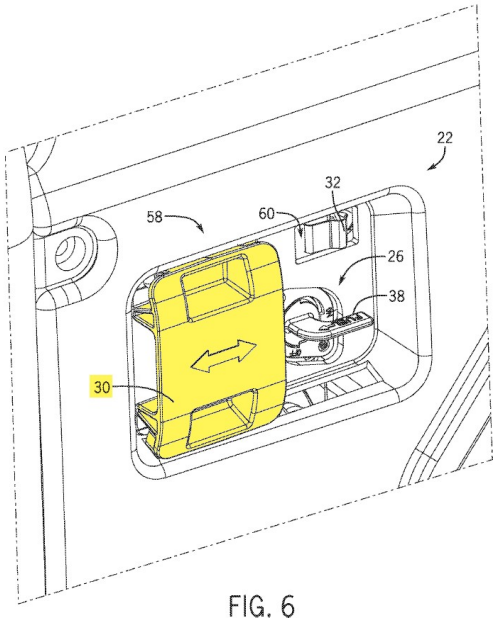

FIG. 6

Furthermore, Champion's criticism of "a subsequent user selection" is misplaced in that it ignores the nature of the disclosed invention in the patent. Dkt. 83, at 9. Champion argues that "subsequent user selection of only one fuel source" is cumulative in view of other claim language, but it ignores the totality of HFT's construction, which is not cumulative but rather gives life and meaning to the claim term – a ***moveable*** component ***whose positioning*** enables subsequent user selection of ***only one fuel source***. The passage that Champion cites from the claim does not address the fact that the component ***moves into a position*** that enables a subsequent user selection of ***only*** one fuel source – the basic guiding principle behind the alleged invention of the patent. *See also* Ex. K, Singhose Dep. Tr., Sept. 11, 2025, at 41:9-51:21 (describing operation of selector switch 30 from patent).

Champion's proposal would allow it to cover any generic mechanism that makes a choice, rather than allowing a user to do so, while ignoring the nature of the invention – that only one fuel source can be chosen at a time. Champion's overbroad alternative proposal allows both the valve—a distinct claim limitation—and electrical circuit switches claimed in separate patents to qualify as a "selector switch." As shown below, this broad scope is expressly disclaimed in prosecution.

2. "valve assembly"

HFT's Proposed Construction	Champion's Proposed Construction
"at least one fuel valve and corresponding valve handle, separate from the selector switch"	Plain and ordinary meaning or "one or more valves arranged together"[2]

Champion's proposed construction for "valve assembly" fails to account for the specific intrinsic evidence supporting HFT's position. Champion ***ignores*** highly relevant disclaimers in prosecution, as well as definitional language, in making its arguments; it fails to cite, let alone address, any part of the specification or the prosecution history. Dkt. 83, at 9-12.[3] As demonstrated, that evidence dictates HFT's construction of this term. Dkt. 84, at 9-10.

Champion also relies on Dr. Singhose for the premise that valve assemblies are well known in engineering. Dkt. 83 at 10. Yet Dr. Singhose fails to identify any such assemblies or provide supporting evidence beyond merely discussing what a fuel valve is. He certainly identifies no intrinsic evidence to rebut HFT's showing for its construction. *See* Dkt. 83-1, ¶¶ 49-58.

In arguing that "separate" in HFT's construction is inappropriate, Champion contends that it conflicts with claim 17 of the '101 patent. Dkt. 83 at 10. This argument is misplaced because Champion fundamentally misinterprets both the proposed construction and the word "separate." During prosecution, Champion consistently described the "valve assembly" as structurally separate and distinct from

---

[2] Champion's alternative is phrased in their argument as what the plain and ordinary meaning should "include."

[3] Dr. Singhose did not identify any relevant intrinsic evidence in his declaration. *See* Dkt. 83-1, ¶¶49-58. During deposition, Dr. Singhose claimed his opinions were based on all intrinsic evidence and that he could raise additional support later—but there is no later opportunity. Ex. K, at 90:9-91:7. Given Dr. Singhose's work as Champion's expert in ***four*** different lawsuits and the *inter partes* reviews involving these same disputed terms, it is unclear why he would ignore clear disclaimers in the intrinsic record that have long been available to him.

the "selector switch" in order to distinguish the prior art. *See* Dkt. 84-4, '101 pat. File History, Appeal Br., at 7-8 (Mar. 8, 2019). HFT's proposed construction remains faithful to this critical intrinsic evidence, which Champion now asks this Court to ignore.

Contrary to its assertion otherwise, Dkt. 83, at 11 (arguing claim differentiation based on '101 patent claim 10 and '896 patent claim 29), the claim differentiation doctrine cannot override prosecution disclaimers or the patentee's own definitions. *See Retractable Techs.*, 653 F.3d at 1305. Regardless, under HFT's construction, the dependent claims[4] Champion identifies have a narrower scope than the claims from on which they depend and do not implicate the doctrine. *See*, *e.g.*, '101 pat., claim 10 (requiring handle "***mechanically coupled*** to the first fuel valve and second fuel valve"); '896 pat., claims 28-29 (adding limitations requiring handle "coupled … and actuatable between an ON position and an OFF position to selectively actuate the [] fuel valve between the open position and closed position"); *Laitram*, No. 2022-1044, 2023 WL 3449148, at *4 (declining to apply claim differentiation when there is more than one meaningful difference between claims). Claim differentiation does not apply.

Champion's reliance on *IQRIS Techs. LLC v. Huawei Techs. Co.* is misplaced. There, the court addressed a known term—"pull cord"—and found that the mere presence of the asserted limitation in the preferred embodiment was insufficient to dictate construction. Dkt. 83 at 11-12. *IQRIS* recognizes that "[t]here is a fine line between reading the claims in light of the specification and importing limitations from the specification into the claims" but indicated that terms may be limited if "the patentee … disavow[ed] its full scope." 130 F.4th 988, 1003-1004 (Fed. Cir. 2025). Here, the patentee clearly disavowed and defined the scope of "valve assembly" as including a valve handle and being separate from the selector switch in order to

[4] A dependent claim incorporates all the limitations of the claims from which it depends. 35 U.S.C. § 112(d). Dependent claims are narrower than their parent claims because they include all the limitations of the parent claim plus additional limitations.

distinguish their claims from the prior art. *See* Dkt. 84-4, '101 pat. File History, Appeal Br. at 6-8 (Mar. 8, 2019).

3. "a mechanical fuel valve"

HFT's Proposed Construction	Champion's Proposed Construction
"a single mechanical fuel valve"	Plain and ordinary meaning or "a mechanical device that allows control of one or more fuel flows"[5]

Champion's argument ***ignores*** the specific intrinsic evidence supporting HFT's position. In attempting to recapture disclaimed scope, Champion disregards the clear prosecution disclaimer. Indeed, Dr. Singhose merely relies on extrinsic evidence and fails to even acknowledge the intrinsic evidence. *See* Dkt. 83-1, ¶¶ 49-58. Champion claims that "[n]othing in the claim itself or the specification" supports HFT's construction. Dkt. 83, at 13. But the prosecution history, a vital part of the intrinsic record, provides a clear disclaimer and definition of the term to be singular. *See* Dkt. 84-5, '780 pat. File History, Amendment/Resp. to Office Action at 12 (Nov. 3, 2017) (distinguishing prior art as it "discloses separate valve for the separate fuel sources …, but not ***a single mechanical fuel valve***") (emphasis added).[6]

[5] Champion's alternative is phrased in their argument as what the plain and ordinary meaning should "include."

[6] The indefinite articles "a" or "an" signify "one" "when the patentee evinces a clear intent to so limit the article" as shown during the prosecution. *KCJ Corp. v. Kinetic Concepts, Inc.*, 223 F.3d 1351, 1356 (Fed. Cir. 2000); *see also Baldwin Graphic Sys., Inc. v. Siebert, Inc.*, 512 F.3d 1338, 1342 (Fed. Cir. 2008) (clarifying that there would be an exception to rule that "a" or "an" means "one or more" when "a patentee ['evinces] a clear intent' to limit 'a' or 'an' to 'one'").

4. "fuel lockout apparatus"

HFT's Proposed Construction	Champion's Proposed Construction
This term should be construed under 35 U.S.C. § 112(f). Recited Function: "prevent the second fuel source from coupling to the second fuel line while the mechanical fuel valve is in the first position;" and "permit the second fuel source to couple to the second fuel line while the mechanical fuel valve is in the second position." Corresponding Structure: items 58, 61 in Figs. 2, 3, 4A, 4B, and equivalents thereof.	Plain and ordinary meaning or "an apparatus that prevents selection of more than one fuel source"[7]

Champion has failed to establish—indeed, cannot establish—any well-understood plain and ordinary meaning for the term "fuel lockout apparatus." As a result, there is no legitimate basis to dispute the application of means-plus-function.

Despite asserting this term has "a well-understood plain and ordinary meaning," Champion resorts to identifying an exemplar structure from the specification corresponding to the claimed functions.[8] ***This is precisely what triggers means-plus-function treatment.*** *See* Dkt. 84, at 12-14; *Williamson v. Citrix Online, LLC*, 792 F.3d 1339, 1351 (Fed. Cir. 2015).

Tellingly, Champion's own proposed alternative construction—"an apparatus that prevents selection of more than one fuel source"—is purely functional and devoid

[7] Champion's alternative is phrased in their argument as what the plain and ordinary meaning should "include."

[8] In fact, Champion identifies the ***same*** structure that HFT identifies in its means-plus-function construction. Dkt. 83, at 14 (citing 5:37–6:31, which describe items 58 & 61 of FIGS. 2–4B of the '780 Patent, as examples of "fuel lockout apparatus").

of any structural content. Dr. Singhose's definition is similarly functional and suffers from the same flaw:

> … a POSITA would readily understand a 'fuel lockout' for a dual-fuel generator to be ***a structure that, at the least, stops one of the fuels from flowing into the generator engine***.

Dkt. 83-1, ¶ 71 (emphasis added). Dr. Singhose merely replaces one generic placeholder term ("apparatus") with another generic placeholder term ("structure") despite the fact it provides no structural guidance. Thus, the only way to identify the structure that meets the claim would be to resort to the specification.

The difference in approach is significant. Under the means-plus-function doctrine, the construction is specific and defined. It provides clarity to a POSITA as to its scope. Champion's suggestion of "plain and ordinary meaning" or its proposed alternative would allow it to use the claim term like a nose of wax, moldable to suit its purposes irrespective of the scope of the invention. Accordingly, the "fuel lockout apparatus" term should be treated as a means-plus function limitation per Section 112(f).

Moreover, Champion incorrectly asserts that HFT ignored the recited function of claim 6. Dkt. 83, at 16. However, because claim 6 depends on claim 1, it merely adds a limitation that narrows claim 1.

> 6. The mechanical fuel lockout switch for a dual fuel engine of claim 1, wherein the mechanical fuel valve ***and*** the fuel lockout apparatus ***operate together to ensure*** that fuel from the first fuel source and fuel from the second fuel source are not simultaneously delivered to the dual fuel engine.

'780 pat., claim 6 (emphasis added). Under the doctrine of claim differentiation, claim 6 ***must*** have a narrower scope than claim 1. *InterDigital*, 690 F.3d at 1324-1325. If Champion were correct, claim 1's "fuel lockout apparatus" would have the same scope as dependent claim 6, violating claim differentiation. *See Wenger Mfg., Inc. v. Coating Mach. Sys., Inc.*, 239 F.3d 1225, 1234 (Fed. Cir. 2001) (holding "air

circulation means" limitation in claim 1 should not be interpreted as requiring structure capable of performing the additional function of recirculation, in dependent claim 3). Claim 6 merely adds the limitation of operating together and does not limit the function of the "fuel lockout apparatus."

Champion argues that HFT's proposed construction does not take into account independent claim 8. However, HFT clearly relies on the functions in independent claim 8 because the structure in the patent corresponding to the recited functions of claim 8 is the ***same structure*** identified in HFT's proposed construction. Claim 8 recites functions that are effectively the same as those in claim 1. *Compare* '780 patent, claim 8 ("prevents the second fuel source from coupling to the internal combustion engine" and "permit the second fuel source to couple to the internal combustion engine") *with* claim 1 ("prevent the second fuel source from coupling to the second fuel line while the mechanical fuel valve is in the first position;" and "permit the second fuel source to couple to the second fuel line while the mechanical fuel valve is in the second position"). The only difference is the fact that the coupling in claim 8 is "to the internal combustion engine" instead of "to the second fuel line" in claim 1. *Id.* But there is no practical difference between these two recitals; the "second fuel line" to which a fuel source is coupled in the patent is a fuel inlet which provides fuel to the engine. *See* '780 pat, col. 6:35-41; *id*., Figs. 2 and 3. The additional functions cited by Champion in claim 8 of "communicates the first fuel source to the internal combustion engine" and "interrupts the first fuel source communication with the internal combustion engine" are functions performed by the same structure. *See* '780 pat., col. 5:39-46; *id*., 6:45-50. Claim 8 does not prove that HFT's construction is wrong. Rather, the term "fuel lockout apparatus" as it appears in claim 8 should have the same construction as it appears in claim 1.

5. "from coupling"/"coupling"/"to couple"

HFT's Proposed Construction	Champion's Proposed Construction
"from attaching"/ "attaching"/ "to attach"	Plain and ordinary meaning or "two or more components directly or indirectly interacting with each other"[9]

Champion's allegation that "coupling" is a "readily understood word that requires no additional construction" rests on an erroneous reading of the intrinsic evidence and ignores a disclaimer it made during prosecution. *See* Dkt. 83, at 17.

Contrary to Champion's assertion that HFT's construction "is narrower than the claim term requires," HFT's construction finds direct support in the claims, where the disputed terms are used in the context of physical attachment. *See* Dkt. 83, at 17; Dkt. 84, at 15. Champion contends that the '780 patent at column 5:52-6:32 "gives examples showing that 'coupled,' as used here, can relate to the concept of preventing fuel flow and permitting fuel flow, which HFT's proposed construction contradicts." Dkt. 83, at 17. This argument fails on its own terms. Every instance of "coupled" within Champion's cited specification excerpt is entirely consistent with HFT's construction of a physical attachment. Indeed, the specification expressly states that the "fuel lockout apparatus 58 is ***rigidly coupled*** to the rotating handle." '780 pat., col. 6:19-22 (emphasis added). This language clearly denotes physical attachment, not mere "interaction" as proposed by Champion's alternative.

Champion also relies on Dr. Singhose to assert that "HFT's proposed construction would completely eliminate fluid coupling when fluid coupling is clearly taught in the specification," implying that a second fuel source is not physically connected to the generator. Dkt. 83, at 17; Dkt. 83-1, ¶ 82. Yet Dr. Singhose testified regarding Fig. 3:

[9] Champion's alternative is phrased in their argument as what the plain and ordinary meaning should "include."

> Q. Right. And you would agree that the hose is coupled to the fuel source in that situation?
> A. Yes.
>
> Q. And you would also agree that the hose would be coupled to the generator in that situation?
> A. That's correct.
>
> Q. And then what you're saying, I think, is that the fuel source is coupled to the generator through the hose because they're all attached to each other?
> A. Yeah, via the hose. That's how 18 the coupling occurs.
>
> Q. Okay. Now, ***would it be incorrect to say that the fuel source is attached to the generator*?**
> A. ***I'm not sure that would be incorrect.*** I think it just, you know, wouldn't have the same flavor of meaning as coupled.

Ex. K, Singhose Dep. Tr., Sept. 11, 2025, at 75:4-76:4. (emphasis added).

Figure 3 of the '780 patent is described using the term consistent with HFT's construction: "LPG supply hose 36 is ***coupled to*** a second fuel line within generator 20 to provide LPG to the carburetor to run the engine." '780 pat, col. 3:65-4:17. As can be seen here, Fig. 3 shows hose 36 as part of second fuel source 30.

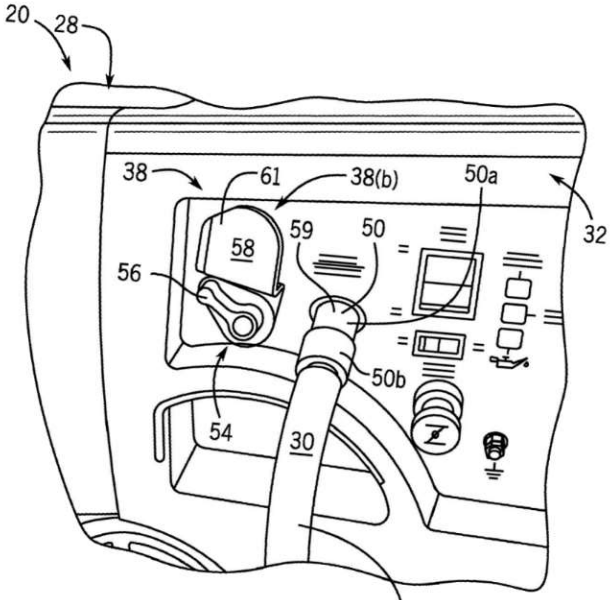

FIG. 3

Although the words "coupling" and "attaching" are both used by the patentee, this does not suggest, as Champion argues, that the words have different meanings. Dkt. 83, at 17-18. Champion clearly used "coupling," as a verb, interchangeably with "attaching."[10]

Champion also criticizes HFT for asserting that "coupled to" is indefinite when phrased with a verb, while proposing the construction of "attach" here. But these positions are consistent. Champion argues that a POSITA would understand these terms to refer to "two or more components directly or indirectly interacting with each other." Dkt. 83, at 17. The use of "coupled to" in '034 patent, claim 1 with "gaseous cutoff" is indefinite because, assuming "gaseous cutoff" is a structure, the claim fails to recite to which other component it is coupled.

Finally, Champion argued during prosecution that "control/operation of these components by a common controller [in prior art] is not a 'coupling' as would be understood by one skilled in the art." Dkt. 84-5, '780 pat. File History, Resp. to Office Action at 13 (May 15, 2018). By rejecting mere "control/operation" as insufficient for coupling, the patentee established that coupling requires physical attachment rather than remote interaction. This disclaimer clearly conflicts with Champion's proposed alternative language of "indirectly interacting."

As HFT demonstrated in its opening brief, this term should be construed to mean "attached" or "attaching."

[10] The use of "coupling" in claim 5 of the '780 patent is different; it is a noun rather than a verb.

6. "communicate"/"communication"

HFT's Proposed Construction	Champion's Proposed Construction
"allow fuel flow" / "fuel flow"	Plain and ordinary meaning or "[a] transfer of liquid, gas, or other material"[11]

Champion's argument fundamentally misapprehends the nature of claim construction. As previously demonstrated, HFT's construction provides a clear understanding of the claim terms grounded in intrinsic evidence. Dkt. 84, at 16-17.

In an attempt to defend its position, Champion arbitrarily substitutes HFT's construction into the claims and argues the result is grammatically incorrect. This approach fails for multiple reasons. First, as Dr. Singhose acknowledged during deposition, substituting Champion's own alternative proposal into claim 1 of the '780 patent produces a phrase that is both grammatically incorrect and nonsensical: "*transfer of liquid, gas, or other material* the first fuel source to the dual fuel engine…" *See* Ex. K, Singhose Dep. Tr., Sept. 11, 2025, at 131:15-132:14.

Second, replacing "communication" in claim 8 of the '895 patent with Champion's proposed definition would yield the phrase "when the second fuel source is in *a transfer of liquid, gas or other material* with the dual fuel engine"—a construction that unreasonably broadens the claim scope given that the specification defines the second fuel line as "for gaseous fuel." '895 pat., col. 1:60-62.

HFT's construction does not impose any additional limitations—particularly not the requirement of constant fuel flow that Champion suggests. Dkt. 83, at 18-19 (citing Dkt. 83-1, ¶ 87). Rather, HFT's construction clarifies for the jury that "communication"/"communicate" refers to fuel flow within the patents.

[11] Champion's alternative is phrased in their argument as what the plain and ordinary meaning should "include."

7. "switch . . . to [enable changing/change] operation of the engine between gaseous fuel and liquid fuel"

HFT's Proposed Construction	Champion's Proposed Construction
"a device for making, breaking, or changing the connections in an electrical circuit that causes a change in operation"	Plain and ordinary meaning or "a physical structure arranged to allow a fuel selection"[12]

As noted above, Champion's own authority suggests the common understanding of the meaning of this term is "a device for making and breaking the connection in an electric circuit." *Douglas Dynamics*, No. 09-cv-261-bbc, 2010 WL 744253, at *10. Champion's recital of the "plain and ordinary meaning" to *also* "include[] a physical structure arranged to allow a fuel selection" actually broadens the term beyond the common understanding and the use of the term in the patents, which consistently describe the "switch" that changes the operation of the engine between gaseous fuel and liquid fuel to be an electrical switch that is part of an electrical circuit controlling solenoids and other parts of the circuit. Dkt. 84, at 17-18.

Construction of this term is necessary because the word "switch" appears in different contexts within this action, specifically in the term "selector switch" discussed above. Given the jury in this case will be considering evidence and argument for patents where "selector switch" is used and patents where "switch" is used, construction is required to help avoid confusing the jury. In any event, HFT's construction is fully consistent with the specification. *Id*. The term should therefore be construed as "a device for making, breaking, or changing the connections in an electrical circuit that causes a change in operation."

[12] Champion's alternative is phrased in their argument as what the plain and ordinary meaning should "include."

8. "rotating mechanical valve"

HFT's Proposed Construction	Champion's Proposed Construction
"a mechanical valve that actuates in a rotative motion free from linear motion"	Plain and ordinary meaning or "a mechanical device that allows control of one or more fuel flows and includes at least one rotating component"[13]

Champion's assertion fails to account for the intrinsic evidence supporting HFT's construction. Most notably, Champion ***ignores*** the specification's express disclaimer describing the benefits of adopting a "rotating mechanical valve" over a "sliding valve." *See* Dkt. 83, at 20-21. As demonstrated below, the intrinsic evidence supports—if not compels—HFT's construction. Dkt. 84, at 19.

Despite this clear intrinsic evidence, Champion argues that "well-known mechanical valves include both rotative and linear motion," offering a water spigot as an example. Dkt. 83, at 20-21; Dkt. 83-1, ¶ 99. Yet Dr. Singhose himself admits that the rotating valve free of linear motion is the only embodiment disclosed in the patent. Ex. K, Singhose Dep. Tr., Sept. 11, 2025, at 98:15-99:5. He also confirmed that the patent distinguishes "sliding valves" from "rotating valves." As demonstrated below, the specification further confirms that the benefit of the "rotating mechanical valve" free from linear motion is reduced leakage risk.

> Manual fuel shutoff 110 actuates in a rotative motion ***free from linear motion*** in part to ensure fuel will not leak through primary o-ring 196 or secondary o-ring 198. Compared to a sliding valve, a rotating valve, such as manual fuel shutoff 110, ***reduces the likelihood that fuel will leak*** from carburetor 62.

'145 pat., col. 14:18-23 (emphasis added).

In short, Champion cannot credibly argue for a "plain and ordinary meaning" which would permit linear motion when its own specification expressly limits the

[13] Champion's alternative is phrased in their argument as what the plain and ordinary meaning should "include." Dkt. 83, at 20.

term and when its chosen example epitomizes the very prior art deficiencies the patent seeks to overcome.

9. "pressure regulator"

HFT's Proposed Construction	Champion's Proposed Construction
"a device that reduces and controls the pressure of gaseous fuel"	Plain and ordinary meaning or "a device that controls pressure"[14]

Champion's assertion that this term should be given its plain and ordinary meaning ignores the specific intrinsic evidence supporting HFT's position.

Champion relies on claim 11 of the '034 patent to argue that "a POSITA would understand this term to mean a device that controls pressure" and that the "term does not require the pressure to be reduced." Dkt. 83, at 22; Dkt. 83-1, ¶¶ 104-106. However, the claim recites that the primary pressure regulator "regulate[s] to a reduced pressure," it also recites that the secondary pressure regulator "regulate[s] fuel supplied from the primary pressure regulator to a desired pressure for delivery through the gaseous fuel line to operate the engine." '034 pat., claim 11; *see also id.*, col. 4:42-45. Rather than suggesting HFT's construction is superfluous, it shows that it is necessarily dictated by the specification. Dkt. 84, at 20-21. Every reference to pressure regulator in the specifications confirms both the primary and secondary pressure regulators "reduce and control the pressure of the fuel from pressurized fuel container" for gaseous fuel delivery. *See* '034 pat., col. 4:7-25; *id.*, col. 4:26-49 ("Secondary pressure regulator 66 regulates fuel received from primary pressure regulator 64 and further reduces the pressure of the fuel to a level required for operation of generator 30."); *see also* '780 pat., col. 4:18-60.

Champion argues that "HFT's construction would allow it to avoid infringement if the pressure upstream of the regulator does not necessarily have to be reduced." Dkt. 83, at 22. This argument exposes Champion's true objective:

[14] Champion's alternative is included in their argument as to what the plain and ordinary meaning should "include." Dkt. 83, at 22.

improperly expanding the claim scope beyond what the specification discloses, solely to ensnare more potential infringers. Champion cannot manufacture infringement by disregarding the specification's plain teachings regarding pressure regulators—"pressure regulators … reduce and control the pressure of the fuel." '034 pat. col. 4:9-13; '780 pat., col. 4:20-24. Moreover, claim construction is a matter of construing the claims of the patent based on intrinsic evidence, not tailoring claim scope to achieve desired infringement outcomes.

10. "integral components of"

HFT's Proposed Construction	Champion's Proposed Construction
"included as a part of"	Plain and ordinary meaning

Champion's insistence on "plain and ordinary meaning" for "integral components of," while failing to articulate what that plain and ordinary meaning actually is, provides no guidance to the jury for understanding this term in its technical context.

Despite asserting that "[a] POSITA would understand this term in light of the intrinsic record," Champion cites no intrinsic evidence whatsoever. Dkt. 83, at 23. Instead, Champion relies solely on Dr. Singhose's declaration, which merely parrots Champion's conclusory assertion without providing expert testimony of how a POSITA would actually understand the term. *Id.*; Dkt. 83-1, ¶ 109. Without expert analysis or reference to the intrinsic reference, Dr. Singhose's declaration provides no support for this claim.

Critically, Champion effectively concedes that HFT's construction is correct when it dismisses the proposed construction as "merely swapping words." Dkt. 83, at 23. Similarly, Dr. Singhose attempts to denigrate HFT's construction as "a substitution of one set of words for another set of words that has a similar meaning" but he fails to identify intrinsic evidence suggesting HFT's construction is incorrect. Dkt. 83-1, ¶ 110. Yet Champion opposes even this modest clarification. This opposition epitomizes Champion's obstructionist approach to claim construction

reflexively opposing reasonable clarifications that would assist the jury in understanding the patented technology.

B. Indefinite Terms

1. "gaseous cutoff"

Champion argues that "'[g]aseous cutoff' needs no construction and should be accorded its plain and ordinary meaning." Dkt. 83, at 23. Champion then identifies this supposed plain and ordinary meaning as "a device that allows control of gaseous fuel flow, *e.g.* to 'open and close a gaseous fuel source to the engine.'" *Id*. Champion's own definition confirms that the term "gaseous cutoff" is indefinite.

Patent law deems terms that are purely functional and lack any corresponding structure identified in the specification to be indefinite. *See Fintiv, Inc. v. PayPal Holdings, Inc.*, 134 F.4th 1377, 1384–85 (Fed. Cir. 2025) (affirming that limitations reciting "a payment handler service" that was "operable to" perform a function, and a "payment handler" "configured to" perform another function were means-plus-function limitations and indefinite for lack of corresponding structure where "the specifications of the asserted patents do not disclose any algorithm to perform the recited function"). Champion's proposed definition—"[a] device that allows control of gaseous fuel flow, *e.g.* 'to open and close a gaseous fuel source to the engine'"—is precisely such a purely functional expression. "Device" is a generic placeholder term that connotes no inherent structure. *Robert Bosch, LLC v. Snap-On Inc.*, 769 F.3d 1094, 1099 (Fed. Cir. 2014) (finding "the word 'device' to be a non-structural, 'nonce' word [a]nd the other words do nothing more than identify function for the 'device' to perform."). The remainder of Champion's definition merely describes what the device does: "allow[] control of gaseous fuel flow, *e.g.* to 'open and close a gaseous fuel source to the engine.'"[15]

[15] The identified function of the gaseous cutoff raises an additional question of indefiniteness, as it is unclear what it means "to open and close a gaseous fuel source ***to the engine***."

Dr. Singhose's deposition testimony confirms this functional characterization. When asked what a "gaseous cutoff" is, he could only describe what it does, not what it is.

> Q. Okay. All right. So please describe what a gaseous cut-off is.
> A. Sure. A gaseous cut-off is a structure that can be moved into the flow of a gas, and basically create virtually an airtight seal so that the gas can't keep flowing in the direction it was going. And then, you know, correspondingly, you can move the structure back out to allow it to move again. It's basically talking about a structure that can temporarily block the flow of gas and then be opened back up to allow the flow of gas again.

Ex. K, Singhose Dep. Tr., Sept. 11, 2025, at 136:15-137:5. He admitted that he cannot identify any specific structure associated with the term.

> Q. Is there anything else you want to add to that structurally in terms of what a person of ordinary skill in the art would understand a gaseous cut-off to be?
> A. Well, I think for the general meaning, that would be it.

Id., at 137:6-11. Dr. Singhose further confirmed that "gaseous cutoff" does not appear anywhere in the specification by itself—only in combination with "solenoid."

> Q. Okay. So let me just ask you this to keep this moving forward. So when you search for gaseous cut-off in the text of the patent -- 3 right? -- just the words gaseous cut-off together, a number of results come back. Is that right?
> A. Yes.
>
> Q. Okay. And what I see is six results that are not in the claims. In other words, two results on page one, two results on page seven, and two results on page 12. But every single one of those six results shows the word gaseous cut-off with the word solenoid afterwards. Is that right?
> A. Let's see. Gaseous cut-off solenoid couple. That's the first one. Gaseous solenoid to switch is the second. A gaseous solenoid coupled to is the third. A gaseous cut-off solenoid to switch is the fourth. A gaseous solenoid 50 coupled to is the fifth, and a gaseous cur-off solenoid to switch is the number six one.

Id., at 138:23-139:23.

The deliberate decision to amend the claims to recite "gaseous cutoff" instead of "gaseous cutoff solenoid" shows that the patentee understood the two terms to be distinct.

The claims recite "gaseous cutoff coupled to open and close a gaseous fuel source to the engine," but neither the specification nor the prosecution history identifies what structure constitutes a "gaseous cutoff." Dkt. 84, at 22-24. While the specification discloses numerous fuel control components—including cutoff solenoids, fuel valves, pressure regulators, and inlet covers—it never uses the term "gaseous cutoff" to identify any specific structure. The complete absence of "gaseous cutoff" from the specification, combined with the claims' structural ambiguity regarding this component, demonstrates that the term fails to provide the reasonable certainty required under *Nautilus, Inc. v. Biosig Instruments, Inc.*, 572 U.S. 898, 901 (2014).[16]

2. "coupled to [verb]"

Champion contends that claim terms containing "coupled to [verb]" should be given their plain and ordinary meaning, yet cannot—and does not—articulate what that plain and ordinary meaning of coupling a component to an action (rather than to another component as would be commonly understood). Instead, Champion offers three unsuccessful attempts to demonstrate that these claim terms are not indefinite.

First, Champion argues that the construction of the term "coupling"/"to couple" demonstrates that a POSITA would understand the meaning of "coupled to [verb]." This argument fails because the patents discussed in that section belong to a different patent family, and neither party's proposed construction there would resolve the indefiniteness of "gaseous cutoff coupled to open and close a gaseous fuel source to

[16] Champion further asserts that HFT waived reliance on any expert testimony for its indefiniteness argument. Dkt. 83 at 23. This meritless contention fails because HFT provided timely notice to Champion that it would rely on expert testimony on the term "gaseous cutoff." Dkt. 83-2; Ex. L.

the engine." Both constructions require coupling between two components, whereas this disputed claim term does not describe a second component.

Second, Champion seeks support in the '034 patent's Abstract, which states "[t]he multi-fuel engine also includes a liquid cutoff solenoid coupled to open and close a liquid fuel path to the engine." This Abstract language is equally nonsensical and provides no guidance to a POSITA as to the meaning. Recognizing this deficiency, Champion improperly rewrites the Abstract, arguing that "a POSITA would know a liquid cutoff solenoid would need to be arranged on the liquid fuel path in order to perform the action of cutting off liquid fuel flow." Dkt. 83, at 25. Champion cites no authority permitting such rewriting of the specification, nor any evidence supporting its assertion about how a POSITA would interpret the Abstract. *See id.* Moreover, Champion's rewriting is contradicted by the analogous language in claim 1 of the '034 patent: "a liquid cutoff solenoid coupled to the carburetor to open and close a liquid fuel path to the engine downstream from the float bowl." This claim language again uses "coupled to [verb]" to indicate coupling between two structures—inconsistent with the disputed claim term requiring coupling between a structure and an action.

Finally, Champion points to the '970 patent specification[17]—yet another patent from a different family—which discloses "[i]n accordance with yet another aspect of the invention, a dual fuel generator includes an alternator and a dual fuel engine coupled to drive the alternator…." Dkt. 83, at 25. This statement provides no assistance in interpreting the disputed claim term. Once again, Champion improperly rewrites the specification without legal authority or supporting evidence, arguing that the engine must be "arranged in such a way that running the engine could result in the driving of the alternator." Even accepting this unauthorized rewriting, the statement

[17] The '970 patent shares a specification with the '780 patent.

still describes coupling between two structures—not between a structure and an action as required by the disputed claim term.

Overall, Champion not only failed to present a comprehensible construction for the term "gaseous cutoff coupled to open and close a gaseous fuel source to the engine," they even failed to identify any evidence that would guide a POSITA in formulating one, confirming that this term is indefinite.

III. CONCLUSION

For the foregoing reasons, HFT respectfully requests that the Court adopt HFT's proposed constructions.

DATED: September 16, 2025

QUINN EMANUEL URQUHART & SULLIVAN, LLP

By /s/ David M. Grable

QUINN EMANUEL URQUHART & SULLIVAN, LLP
David M. Grable (SBN 237765)
davegrable@quinnemanuel.com
Lauren Lindsay (SBN 280516)
laurenlindsay@quinnemanuel.com
865 South Figueroa Street, 10th Floor
Los Angeles, CA 90017-2543
Telephone: (213) 443-3000
Facsimile: (213) 443-3100

QUINN EMANUEL URQUHART & SULLIVAN, LLP
Eric Huang (*pro hac vice*)
erichuang@quinnemanuel.com
Jason Williams (*pro hac vice*)
jasonwilliams@quinnemanuel.com
295 5th Avenue
New York, NY 10016-7103
Telephone: (212) 849-7000
Facsimile: (212) 849-7100

Attorneys for Plaintiff
Harbor Freight Tools USA, Inc.

CERTIFICATE OF COMPLIANCE

The undersigned, counsel of record for Harbor Freight Tools USA, Inc., certifies that this brief contains 7230 words, which complies with the word limit set by the parties' joint stipulation filed on September 5, 2025.

DATED: September 16, 2025

QUINN EMANUEL URQUHART & SULLIVAN, LLP

By /s/ *David M. Grable*
David M. Grable
Attorneys for Plaintiff Harbor Freight Tools USA, Inc.

CERTIFICATE OF SERVICE

I, David M. Grable, hereby certify that on this September 16, 2025, a copy of foregoing **Plaintiff Harbor Freight Tools USA, Inc.'s Responsive Claim Construction Brief** was served via email on all attorneys of record.

/s/ David M. Grable
David M. Grable
Attorneys for Plaintiff Harbor Freight Tools USA, Inc.