Solid-State Electronics Vol. 30, No. 11, pp. 1121–1125, 1987
Printed in Great Britain

0038-1101/87 $3.00 + 0.00
Pergamon Journals Ltd

N-TYPE SIPOS AND POLY-SILICON EMITTERS

Y. H. KWARK and R. M. SWANSON
Stanford University, Stanford, CA 94305, U.S.A.

Abstract—*N*-type SIPOS and poly-silicon emitters on silicon show potential for improved minority carrier blocking properties over conventional diffused emitters. This paper discusses experiments designed to elucidate the physical mechanisms responsible for this improvement and to optimize the process conditions. Emitters both with and without an intentionally grown chemical oxide under the SIPOS or poly-silicon film are investigated. Both poly-silicon and SIPOS emitters, in their optimized form, can achieve J_{oe} of less than 2×10^{-14} A/cm^2, an improvement of several decades over shallow diffused emitters.

1. INTRODUCTION

SIPOS, for Semi-Insulating Poly-crystalline Silicon, has become the generic acronym for deposited silicon films doped with oxygen. The physical properties can be varied over a wide range by varying oxygen content. Indeed, normal poly-silicon and SiO_2 can be thought of as the limiting cases of no oxygen and full oxidation. The optical and electrical properties can be varied somewhat continuously between Si and SiO_2 by adjusting the oxygen content. *N* and *p*-type conduction can be obtained at low oxygen concentrations by doping with phosphorus and boron. These films, pioneered at Sony, found initial application in their intrinsic form to the passivation of high voltage devices[1]. Later, doped films were successfully applied to emitter contact structures, resulting in a 50-fold reduction of J_{oe} for *n*-type emitters[2,3]. This paper discusses experiments designed to elucidate the physical mechanisms responsible for this improvement and to optimize the process conditions. Further details are available in Ref. [4].

As deposited, SIPOS is usually amorphous. Annealing is necessary to activate the dopant and to produce films suitable for use as emitter contacts. During annealing it has been found that the film morphology changes. Si precipitates into small grains of crystalline Si and the oxygen segregates as SiO_2 on the grain boundaries[5]. One of the salient effects of oxygen incorporation is the suppression of grain growth, typical grain sizes being less than 100 Å. At higher oxygen concentrations, carrier transport is dominated by tunnelling through these thin SiO_2 shells[6].

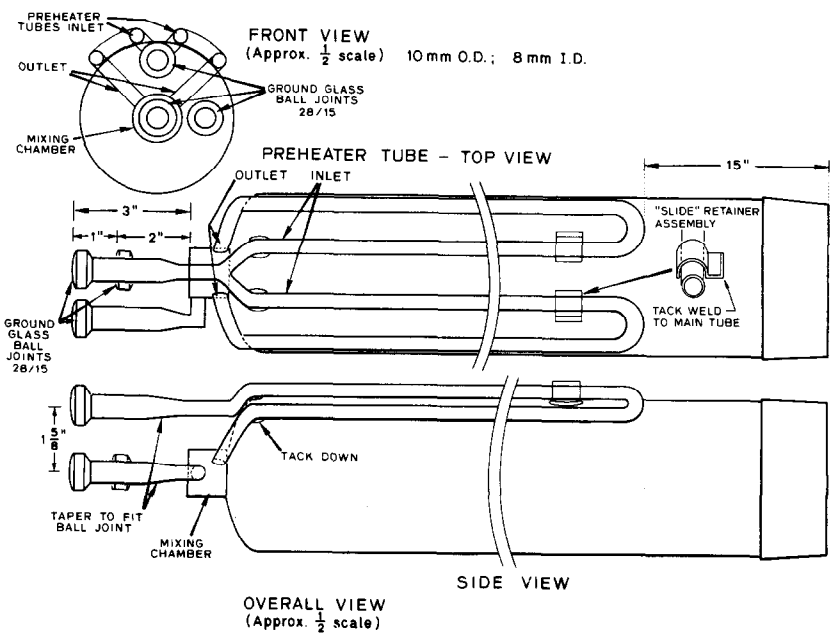

Fig. 1. SIPOS deposition tube—overall view.

Petitioner Canadian Solar (USA) Inc., Ex. 1007, p. 1121

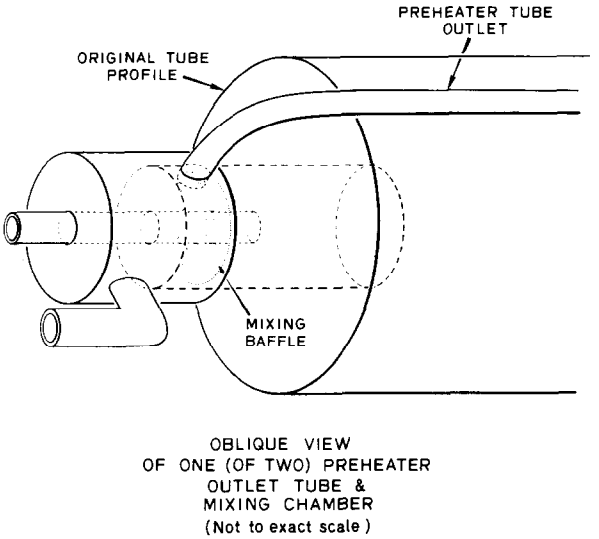

Fig. 2. SIPOS deposition tube—close up to mixing chamber.

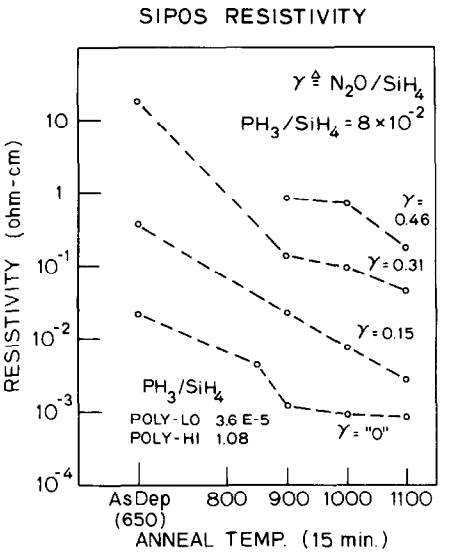

Fig. 3. $N+$ SIPOS film resistivity vs T_A and γ.

2. DEPOSITION

Evaporation, atmospheric CVD, and low pressure CVD have all been used to fabricate SIPOS layers. CVD techniques have been found most successful for device applications. Due to the lack of a low-pressure deposition system, atmospheric CVD was selected as the method for fabricating experimental films. Initial experiments in a cold-wall epitaxial reactor revealed that SIPOS is a difficult material to controllably deposit because of its non-stoichiometric nature. Useable areas of deposition extended only several centimeters over the susceptor. Accurate control of both temperature and flow dynamics was clearly needed. This suggested using a hot-wall system. The final configuration is shown in Fig. 1. A carrier gas preheater is used so that the high flow of nitrogen does not cool the wafers. Figure 2 details the gas-mixing chamber. The design is such that the reactant species are mixed due to turbulance in the gas flows. The end of the tube is purged to minimize stagnant regions and gas-phase reactions. Useful deposition with this system extends over 6 inches on the susceptor.

A plot of film resistivity as determined by four-point probe is shown in Fig. 3, γ is the mol ratio of N_2O to SiH_4. The strong dependence of resistivity on oxygen content is confirmed and anneals at over 900°C are found necessary to fully activate the dopant. It will be shown later that the $\gamma = 0$ films actually contain significant oxygen (as much as several atomic percent), probably due to residual water or oxygen in the deposition ambient; however, resistivities comparable to that of poly-silicon are obtained nevertheless.

3. MEASUREMENT OF J_{oe}

The relevant parameters which characterize the d.c. performance of an emitter are its saturation current, J_{oe}, and specific contact resistance, R_c. This report will concentrate mainly on the saturation current. J_{oe} characterizes the emitter recombination current because it is easily shown that, even in the case of SIPOS emitters, the minority-carrier hole current in low-level injection at the edge of the emitter-base junction space charge region follows the standard relation $J_p = J_{oe}(\exp qV_{be}/kT - 1)$.

In order to measure J_{oe}, transistor test structures, as shown in Fig. 4, were fabricated. These used epitaxially deposited bases with uniform doping concentration to allow extraction of the base-recombination component of the base current through modulating the base width via changes in collector-base voltage. Base recombination current was equivalent to a J_{oe} of 8×10^{-15} A/cm^2 which places a lower limit on the emitter saturation current

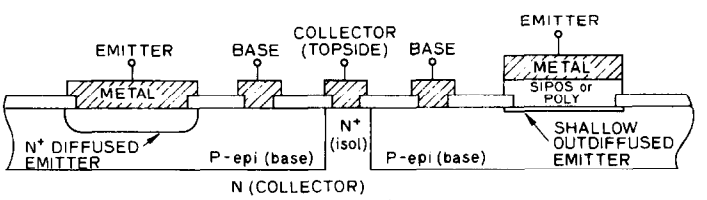

Fig. 4. Cross-section of bipolar test structures.

which can be reliably determined. The test devices had two diffused emitters of different junction depth, emitters A and B, that were either contacted with aluminum, as a control, or contacted with *in-situ* doped SIPOS or poly-silicon. In addition, emitters of type C with no prediffusion were fabricated. These relied solely on outdiffusion from the *in-situ* doped SIPOS or poly-silicon to provide sufficient surface doping concentration.

The emitter saturation current was measured using standard Gummel plot methods. Devices of two perimeter-to-area ratios were incorporated to allow extraction of the perimeter component of the base current. Temperatures determined using a thermocouple on the wafer chuck agreed with those determined from the slope of the log collector current vs base-emitter voltage, after correcting for base-width modulation effects. Reported saturation currents are "corrected" to 300 K using the relation:

$$J_{oe}(300\text{ K}) = J_{oe}(T_{\text{device}})\frac{n_i^2(300\text{ K})}{n_i^2(T_{\text{device}})}.$$

4. EXPERIMENTAL RESULTS

Three types of emitter contacts were studied, conventional aluminum contacts, SIPOS and poly-silicon. In the latter two cases the emitters were fabricated both with and without an interfacial chemical oxide.

4.1. Conventional emitters

The pre-diffused emitter deposition parameters are shown in Table 1. Phosphine at 1100 ppm was used as the dopant source in these conventional predep and drive-in diffusions. Gummel plots for both the large and small devices are shown in Fig. 5. The extracted perimeter- and area-related current components are also shown. The perimeter current shows a strong non-ideal component which was found,through the use of a field plate equipped device, to arise from recombination at the Si–SiO_2 interface in the emitter-base space-charge region. Illustrated in Fig. 5 is the method of removing the effect of series resistance by assuming that the collector current continues to follow an ideal exponential form. Any additional voltage is assumed to come from resistive voltage drops and is subtracted from both the collector and base current plots.

Table 2 shows the measured saturation current for an aluminum-contacted conventional emitter. The extracted value varies by less than 4% over 4 decades of base current. This is testimony to the accuracy with which the various parasitics (perimeter current and series resistance) have been accounted for, as well as the precision of the temperature determination. Similar procedures were used for the other emitter structures.

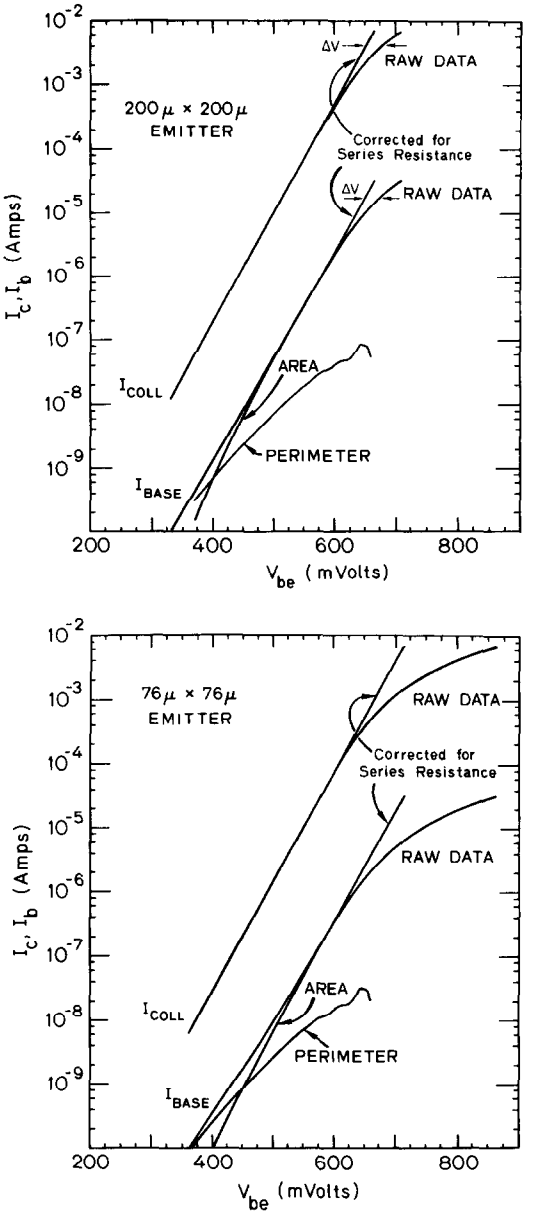

Fig. 5. Gummel plots for aluminum contacted large and small emitter devices.

4.2. SIPOS emitters

4.2.1. Role of oxygen. It has been postulated that the improvement that SIPOS emitters obtain is because SIPOS has a larger band gap than crystalline

Table 1. Deposition parameters for the prediffused emitters

	Predep (T/t)	Drive-in (T/t)	Sheet resistance	Junction depth
EM-A	800°C/30 min	1025°C/90 min	60Ω/□	1.0 μ
EM-B	800°C/30 min	1025°C/30 min	70Ω/□	0.66 μ

Table 2. Measured J_{oe} vs V_{be} for a conventional aluminum contacted transistor

V_{be} (V)	J_{oe} (10^{-12} A/cm^2)	V_{be} (V)	J_{oe} (10^{-12} A/cm^2)
0.392	1.18	0.545	1.18
0.409	1.21	0.562	1.17
0.426	1.21	0.579	1.17
0.443	1.20	0.596	1.16
0.460	1.19	0.613	1.16
0.477	1.19	0.630	1.15
0.494	1.19	0.647	1.13
0.511	1.19	0.664	1.13
0.528	1.18		

silicon so that the injected minority carriers see a barrier at the SIPOS–Si interface[3]. To test this hypothesis, SIPOS contacts with varying oxygen were fabricated with the results shown in Fig. 6. For these experiments, the SIPOS was annealed at 900°C for 13 min. No out-diffused emitter was incorporated. It is seen that there is no descernable influence of oxygen content on saturation current as would be expected from the heterojunction model. The film with $\gamma = 1.5$ has an oxygen concentration similar to that of the Sony-transistors[3]. Even the $\gamma = 0$ (no intentional oxygen) film has a low saturation current. These films, however, were found to dissolve in HF, indicating the presence of some oxygen.

As seen in Fig. 6, however, the film annealed at 1000°C has J_{oe} nearly an order of magnitude larger than those at 900°C. Clearly, anneal temperature is more important than oxygen concentration in determining saturation current.

4.2.2. J_{oe} vs anneal temperature. A series of experiments was conducted to determine the influence of anneal temperature on saturation current. In addition, it was decided to incorporate an intentional interface oxide on a portion of the devices on each wafer in order to help clarify the roles of interface vs bulk effects in the observed reduction in saturation current under SIPOS contacts. The interface oxide, called "chemox" here, is the result of omitting the final HF dip after an RCA clean. The SIPOS had $\gamma = 0$, or no intentional oxygen. Results are shown in Figs 7 and 8. The results for the aluminum contacted emitters are also shown.

For devices with no chemox and a pre-diffused emitter, Fig. 7, J_{oe} is relatively constant for anneal temperatures less than 850°C at a value of 1/20 that of aluminum contacted emitters. As the temperature increases above 900°C, J_{oe} increases, eventually approaching the value for the conventional emitter at

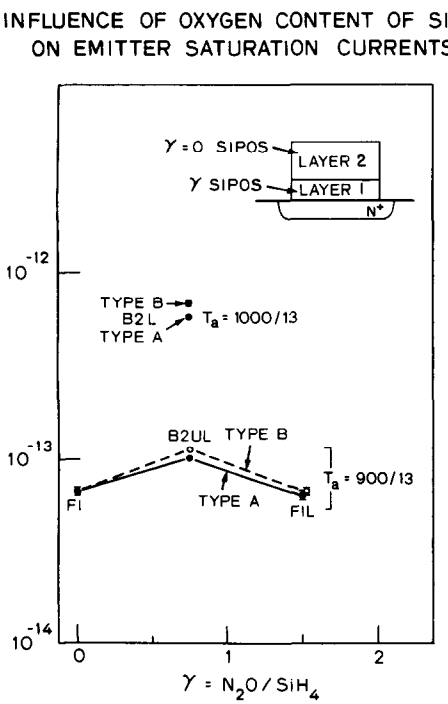

Fig. 6. Influence of oxygen content of SIPOS on J_{oe}.

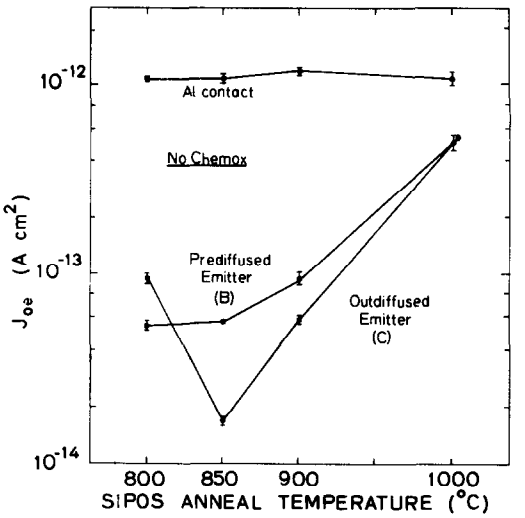

Fig. 7. Influence of anneal temperature on J_{oe} for SIPOS contacted emitters without chemox.

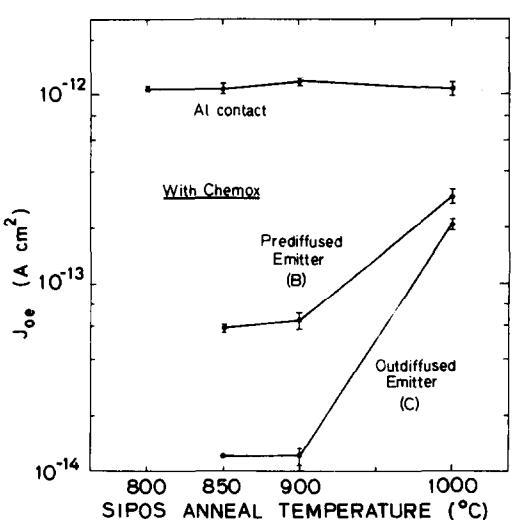

Fig. 8. Influence of anneal temperature on J_{oe} for SIPOS contacted emitters with chemox.

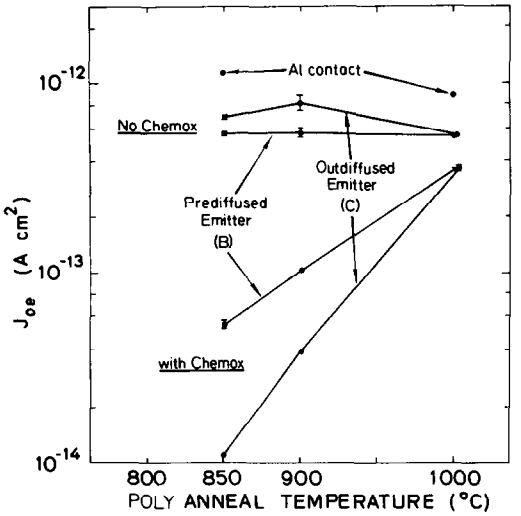

Fig. 9. Experimental J_{oe} vs anneal temperature for poly-silicon contacted emitters.

1000°C. If no pre-diffused emitter exists, J_{oe} starts rather high at 800°C, then exhibits a minimum at 850°C of only 2×10^{-14} A/cm^2. This is 1/50 that of the conventional emitter. Finally, J_{oe} again increases with higher anneal temperatures. Undoubtedly, in the 800°C case the surface of the silicon has not been doped sufficiently in the out-diffused case to limit the minority-carrier concentration at the SIPOS–Si interface, resulting in poor performance.

It is interesting to note that, excluding the 800°C case, J_{oe} for the pre-diffused emitter is 5×10^{-14} A/cm^2 plus that for the out-diffused case. This suggests that the total J_{oe} comes from a constant recombination in the diffused emitter plus that coming from the out-diffused portion. For such to be the case the quasi-Fermi levels throughout the emitter need be constant. This is approximately the case for these devices which have passivated surfaces. The increase in J_{oe} with anneal temperature is then explained as the result of increased doping, and hence reduced lifetime, in the out-diffused portion of the emitter. Alternatively, the increase could be due to the break-up of an interfacial oxide. Such an oxide could form, for example, during the anneal as oxygen segregates from the SIPOS. Perhaps both methods are operative.

When the chemox is incorporated, a slightly different picture emerges. At 800°C J_{oe} could not be extracted due to excessive series resistance. This resistance decreases with higher anneal temperatures suggesting the break-up of the interfacial oxide and an increase in surface doping concentration. At 850°C the results are substantially the same as with no chemox, Fig. 8. Annealing at 900°C, however, does not result in any increase in J_{oe} as was the case without a chemox. This suggests that either the chemox is acting as a barrier to the out-diffusion of phosphorus, and thus prevents lifetime reduction in the surface region, or alternatively, is more resistant to break-up during annealing than whatever oxide exists without the chemox.

4.3. *Poly-silicon emitters*

When it was discovered that the $\gamma = 0$ SIPOS films actually had significant oxygen, it was decided to compare these results with the case of poly-silicon deposited with a hydrogen carrier in an epi reactor. Such films contain very little oxygen. The results are shown in Fig. 9. In this case the emitters without chemox had J_{oe} only a factor of two less than the aluminum contacted emitters. This reduction can be theoretically accounted for simply from the increase in thickness of the highly doped emitter due to the addition of the poly-silicon. The addition of a chemox causes J_{oe} to be substantially the same as for SIPOS emitters. Once again, there is an additive effect between the pre-diffused and out-diffused emitters.

5. DISCUSSION AND CONCLUSIONS

Both poly-silicon and SIPOS emitters, in their optimized form, can achieve J_{oe} of less than 2×10^{-14} A/cm^2. For poly-silicon contacts this requires an interfacial chemox. The chemox is not necessary for SIPOS contacts. The similarity of results for the chemox poly-silicon contacts and SIPOS contacts suggests that these both obtain their improved performance through incorporating a thin, tunnelable interfacial oxide that impedes the flow of holes rather than as a result of the increased band gap of SIPOS. Preliminary results on p-type SIPOS emitters indicates that they have much poorer performance. This is consistent with a barrier that has a lower electron barrier height than hole barrier height, as does SiO_2.

Acknowledgement—This work was supported by the Department of Energy through Sandia National Laboratories.

REFERENCES

1. T. Matsushita, T. Aoki, T. Ohtsu *et al.*, *IEEE Trans. Electron Dev.* **23**, 826 (1976).
2. T. Matsushita, N. Oh-uchi, H. Hayashi and H. Yamoto, *Appl. Phys. Lett.* **35**, 549 (1979).
3. T. Matsushita, H. Hayashi and N. Oh-uchi, *Jap. J. appl. Phys.* (suppl) **20**, 75 (1981).
4. Y. H. Kwark, Stanford Electronics Laboratory Technical Report, Stanford University (1985).
5. M. Hamasaki, T. Adachi, S. Wakayama and M. Kikuchi, *J. appl. Phys.* **49**, 3987 (1978).
6. J. Ni and E. Arnold, *Appl. Phys. Lett.* **39**, 554 (1981).