US008222516B2

(12) **United States Patent**
Cousins

(10) **Patent No.: US 8,222,516 B2**
(45) **Date of Patent: Jul. 17, 2012**

(54) **FRONT CONTACT SOLAR CELL WITH FORMED EMITTER**

(75) Inventor: **Peter John Cousins**, Menlo Park, CA (US)

(73) Assignee: **SunPower Corporation**, San Jose, CA (US)

(*) Notice: Subject to any disclaimer, the term of this patent is extended or adjusted under 35 U.S.C. 154(b) by 690 days.

(21) Appl. No.: **12/070,742**

(22) Filed: **Feb. 20, 2008**

(65) **Prior Publication Data**

US 2009/0205712 A1 Aug. 20, 2009

(51) **Int. Cl.**
H01L 31/00 (2006.01)

(52) **U.S. Cl.** **136/255**; 136/256; 136/258; 438/57; 438/69; 438/72; 438/97; 438/98; 257/436; 257/461

(58) **Field of Classification Search** 136/255, 136/256, 258; 438/57, 69, 72, 97, 98; 257/436, 257/461

See application file for complete search history.

(56) **References Cited**

U.S. PATENT DOCUMENTS

3,961,997	A	6/1976	Chu	
4,427,839	A *	1/1984	Hall	136/255
4,665,277	A *	5/1987	Sah et al.	136/255
4,927,770	A	5/1990	Swanson	
5,030,295	A	7/1991	Swanson et al.	
5,053,083	A	10/1991	Sinton	
5,057,439	A	10/1991	Swanson et al.	
5,164,019	A	11/1992	Sinton	
5,217,539	A	6/1993	Fraas et al.	
5,266,125	A	11/1993	Rand et al.	
5,360,990	A	11/1994	Swanson	
5,369,291	A	11/1994	Swanson	
5,449,626	A *	9/1995	Hezel	438/71
5,479,018	A *	12/1995	McKee et al.	250/338.1
5,641,362	A	6/1997	Meier	
6,262,359	B1 *	7/2001	Meier et al.	136/256
6,274,402	B1	8/2001	Verlinden et al.	
6,313,395	B1	11/2001	Crane et al.	
6,333,457	B1	12/2001	Mulligan et al.	
6,337,283	B1	1/2002	Verlinden et al.	
6,387,726	B1	5/2002	Verlinden et al.	
6,423,568	B1	7/2002	Verlinden et al.	
6,524,880	B2	2/2003	Moon et al.	
6,998,288	B1	2/2006	Smith et al.	
7,135,350	B1	11/2006	Smith et al.	
2003/0134469	A1	7/2003	Horzel et al.	

(Continued)

OTHER PUBLICATIONS

PCT International Search Report for Application No. PCT/US09/32345, Mar. 23, 2009, 2 sheets.

(Continued)

Primary Examiner — Basia Ridley
Assistant Examiner — Devina Pillay
(74) *Attorney, Agent, or Firm* — Okamoto & Benedicto LLP

(57) **ABSTRACT**

A bipolar solar cell includes a backside junction formed by an N-type silicon substrate and a P-type polysilicon emitter formed on the backside of the solar cell. An antireflection layer may be formed on a textured front surface of the silicon substrate. A negative polarity metal contact on the front side of the solar cell makes an electrical connection to the substrate, while a positive polarity metal contact on the backside of the solar cell makes an electrical connection to the polysilicon emitter. An external electrical circuit may be connected to the negative and positive metal contacts to be powered by the solar cell. The positive polarity metal contact may form an infrared reflecting layer with an underlying dielectric layer for increased solar radiation collection.

12 Claims, 7 Drawing Sheets

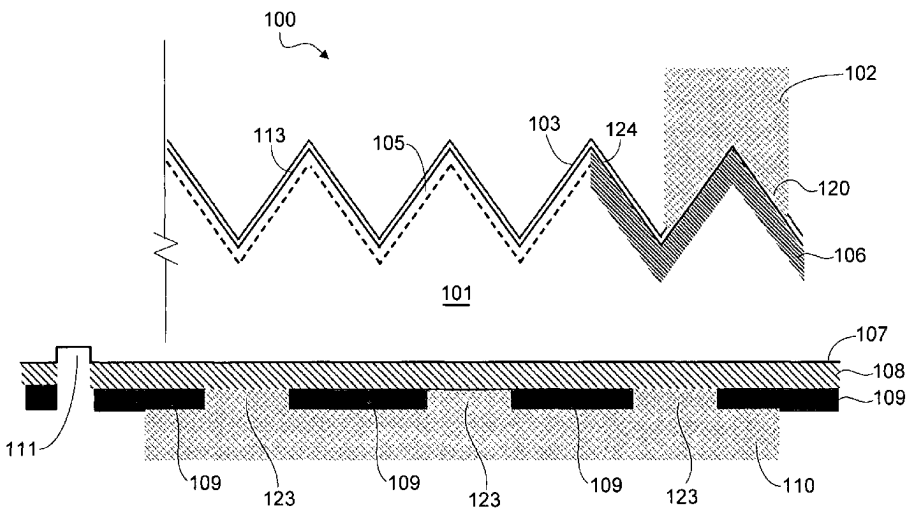

U.S. PATENT DOCUMENTS

2004/0200520	A1	10/2004	Mulligan et al.	
2005/0268963	A1*	12/2005	Jordan et al.	136/256
2006/0130891	A1	6/2006	Carlson	
2006/0157103	A1*	7/2006	Sheats et al.	136/244
2007/0082206	A1	4/2007	Hartig	

OTHER PUBLICATIONS

W.P. Mulligan, et al., "A Flat-Plate Concentrator: Micro-Concentrator Design Overview", 2000, 3 sheets, Proceedings of the 28th IEEE PVSC.

K. R. McIntosh, et al., "The Choice of Silicon Wafer for the Production of Low-Cost Rear-Contact Solar Cells", May 2003, 4 sheets, Sunpower Corporation, Sunnyvale, CA.

P.J. Verlinden, et al., "Will We have a 20%-Efficient(PTC) Photovoltaic System?", 2001, 6 sheets, Proceedings of the 17th Europe Photovoltaic Solar Energy Conference.

William P. Mulligan, et al., "Development of Chip-Size Silicon Solar Cells", 2000, 6 sheets, Proceedings of the 28th IEEE PVSC.

Akira Terao, et al., "A Mirror-Less Design for Micro-Concentrator Modules", 2000, 4 sheets, Proceedings of the 28th IEEE PVSC.

P.J. Verlinden, et al., "Backside-Contact Silicon Solar Cells with Improved Efficiency for the '96 World Solar Challenge", 1997, 5 sheets, Proceedings of the 15th EPSEC.

P.J. Verlinden, et al., "One-Year Comparison of a Concentrator Module with Silicon Point-Contact Solar Cell to a Fixed Flat Plate Module in Northern California", 2000, 4 sheet, Proceedings of the 16th EPSEC.

Richard M. Swanson "The Promise of Concentrators", 2000, Prog. Photovolt. Res. Appl. 8, pp. 93-111.

Ronald A. Sinton, et al., "Simplified Backside-Contact Solar Cells", Feb. 1990, pp. 348-352, IEEE Transactions on Electron Devices, vol. 37. No. 2.

Ronald A. Sinton "Device Physics and Characterization of Silicon Point-Contact Solar Cells", Feb. 1997, pp. 1-154, Stanford Electronics Laboratories, Stanford University, CA.

Richard Roland King "Studies of Oxide-Passivated Emitters in Silicon and Applications to Solar Cells", Aug. 1990, pp. 1-200, (Thesis) Electrical Engineering Department of Stanford University, CA.

* cited by examiner

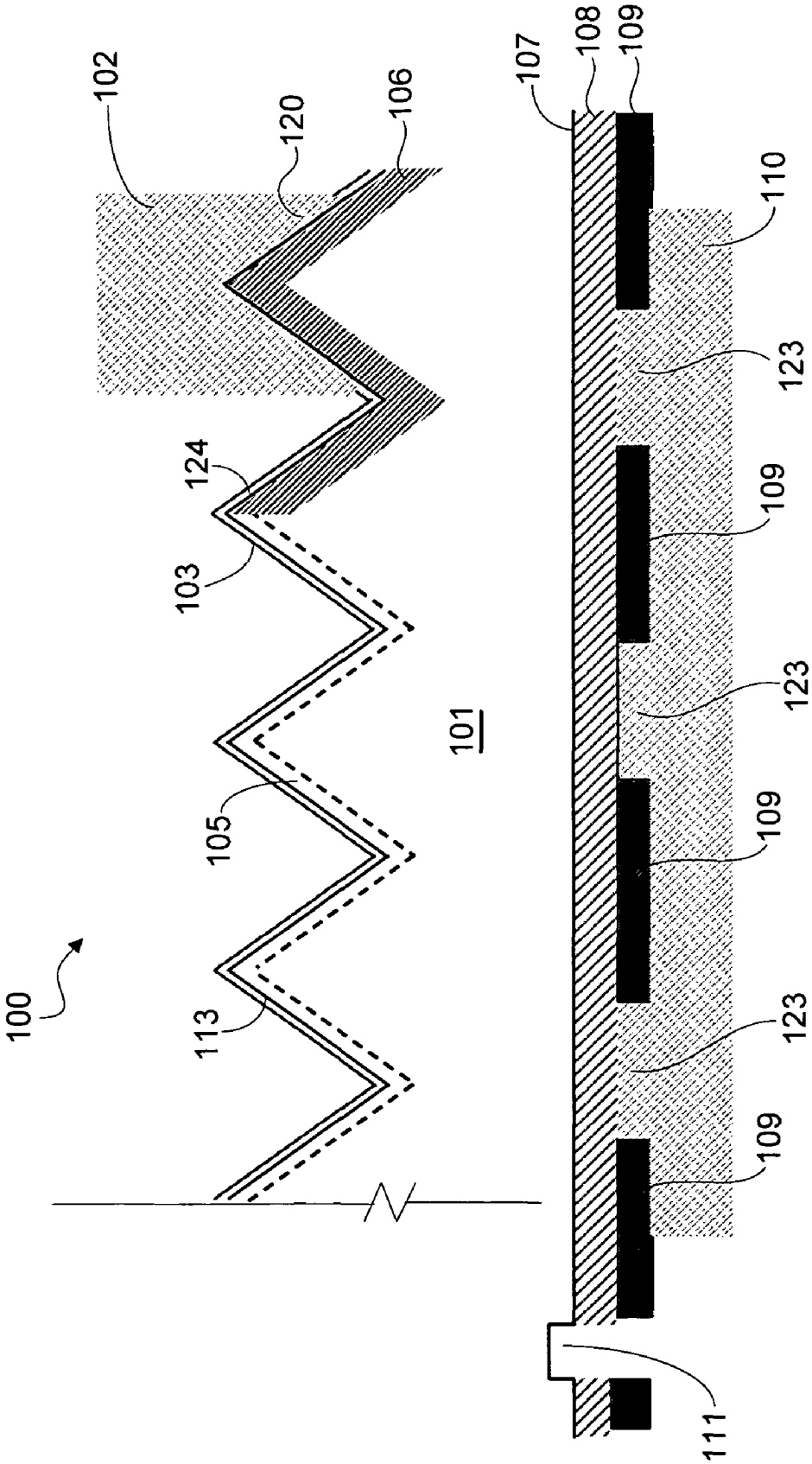
100
102
120
106
124
103
105
113
101
107
108
109
110
123
109
123
109
123
109
111

FIG. 1

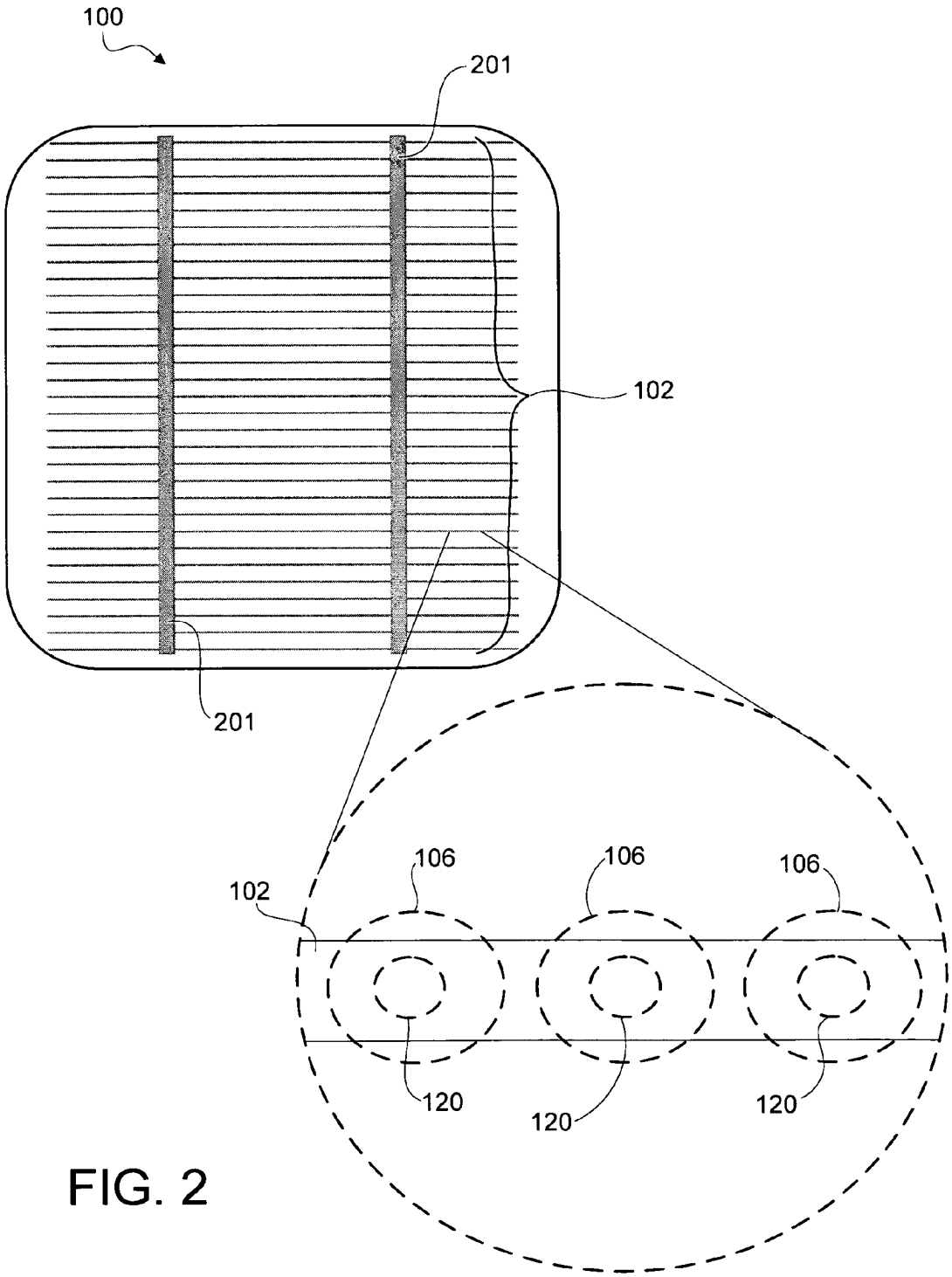

FIG. 2

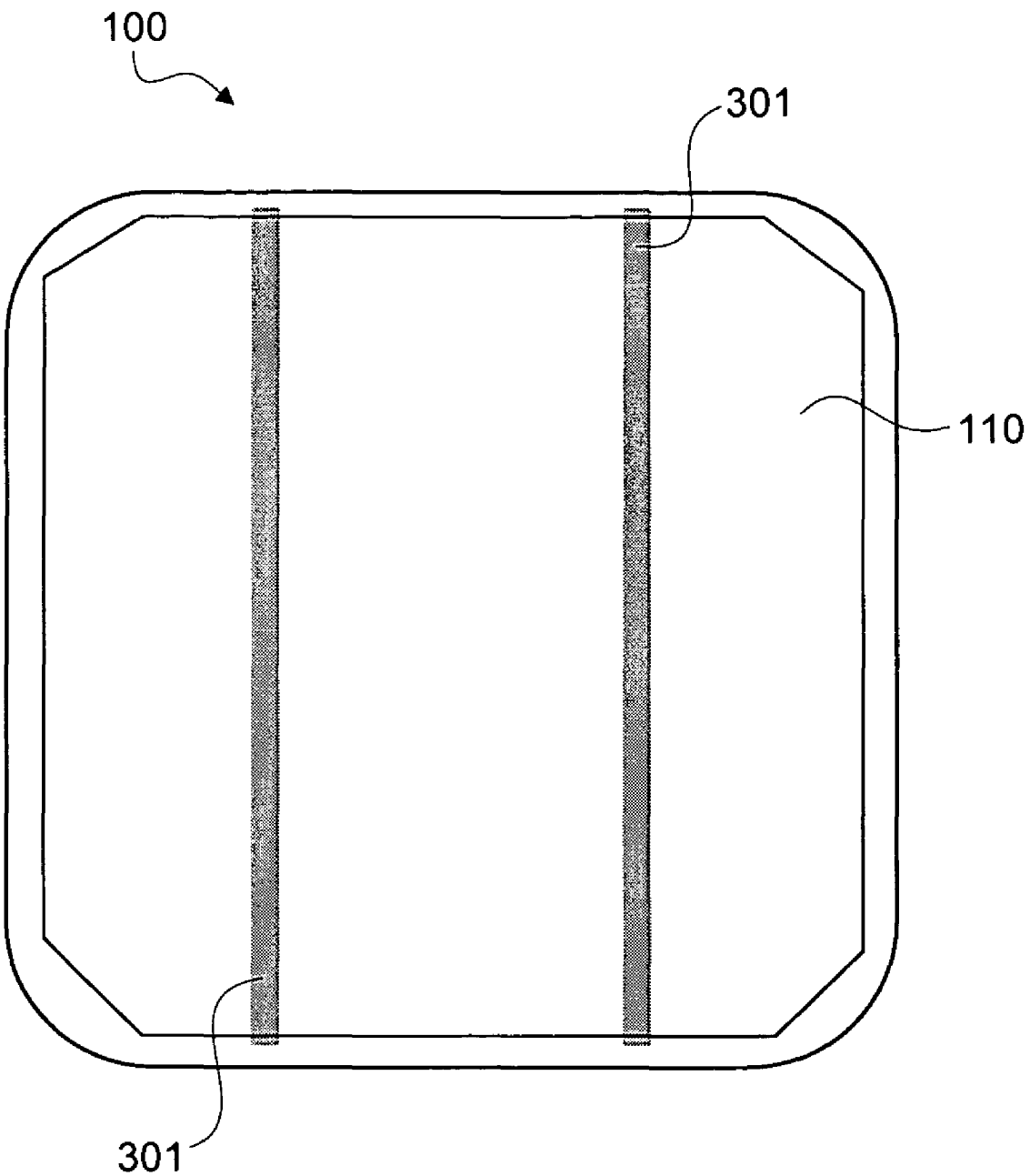

FIG. 3

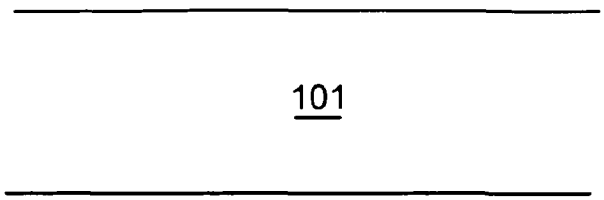

FIG. 4A

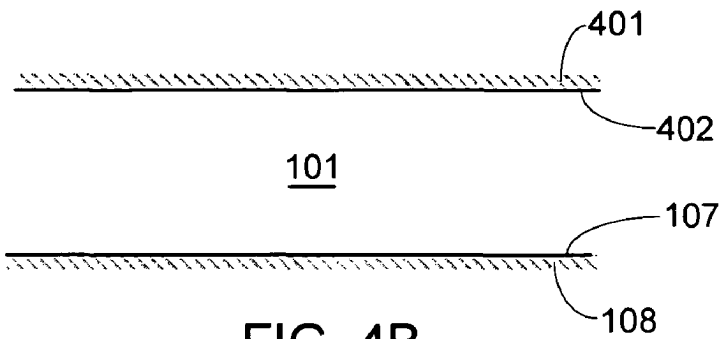

FIG. 4B

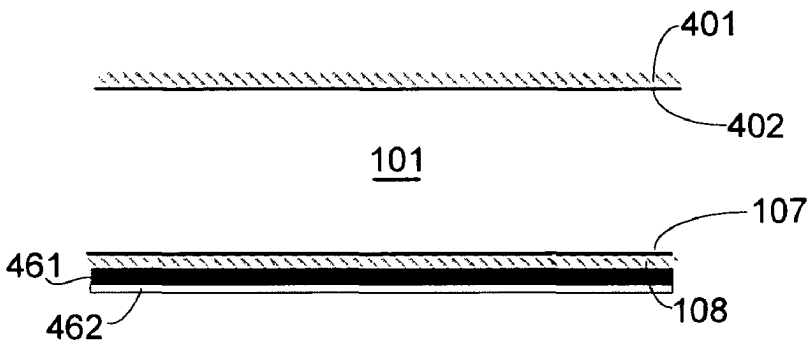

FIG. 4C

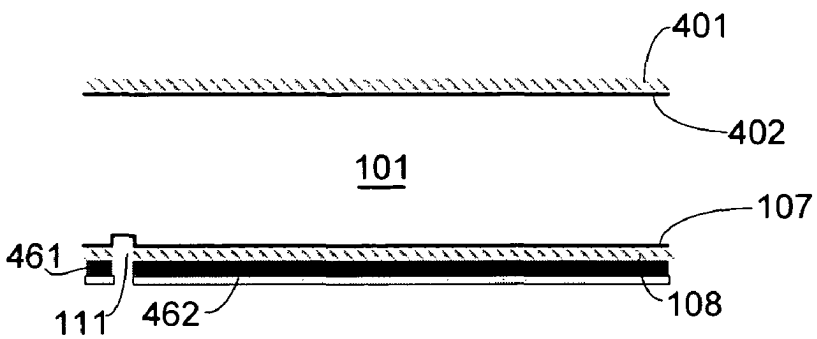

FIG. 4D

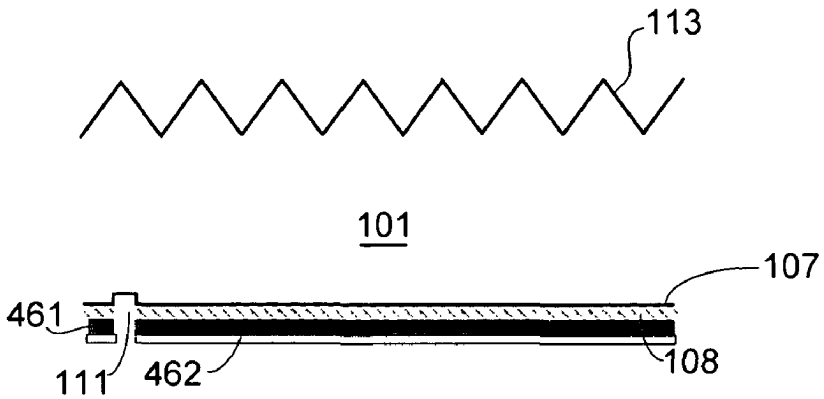

FIG. 4E

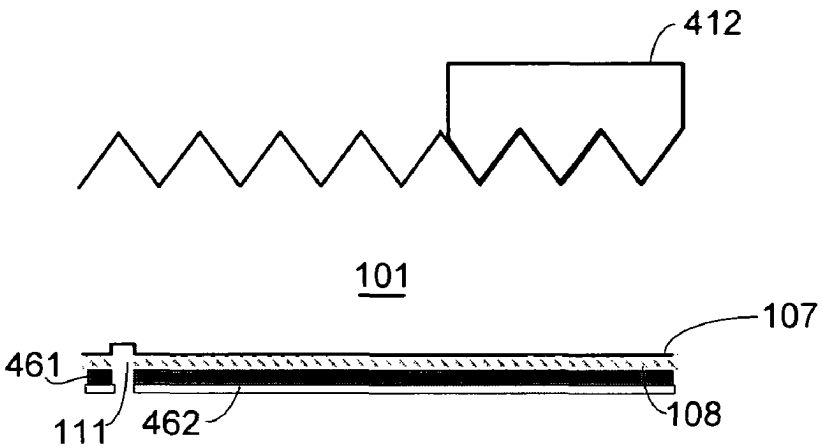

FIG. 4F

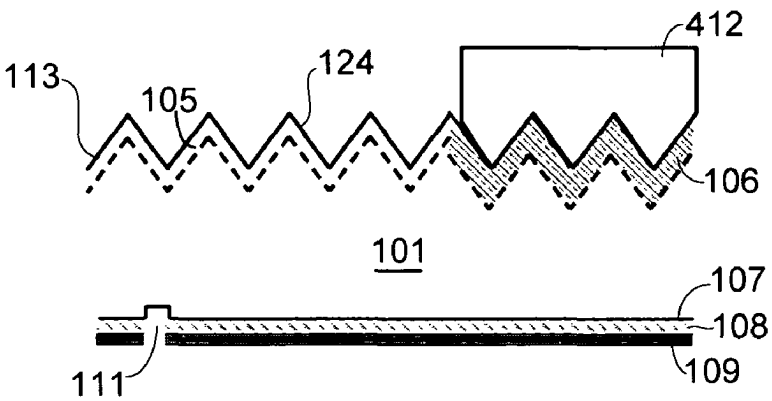

FIG. 4G

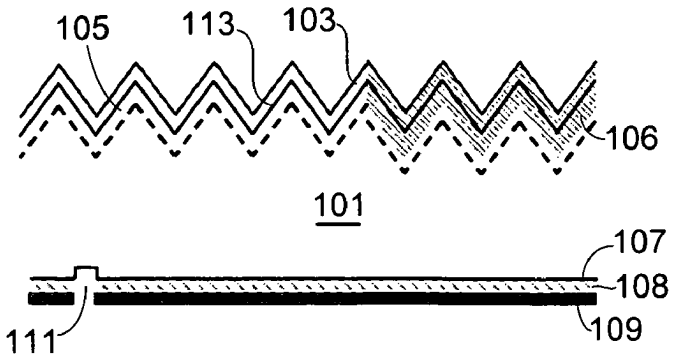

FIG. 4H

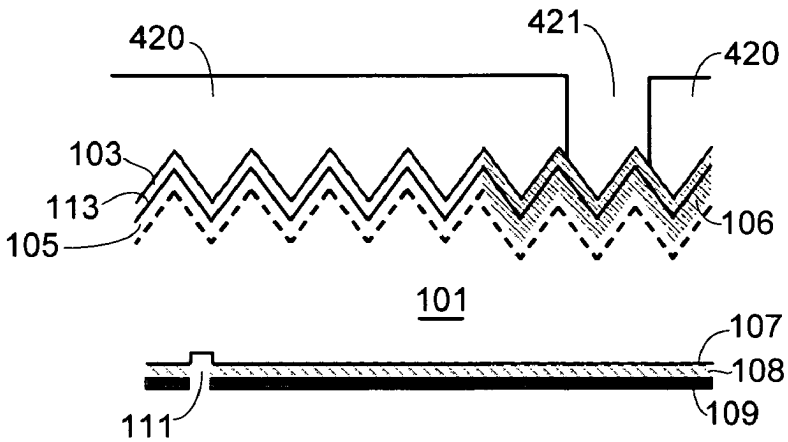

FIG. 4I

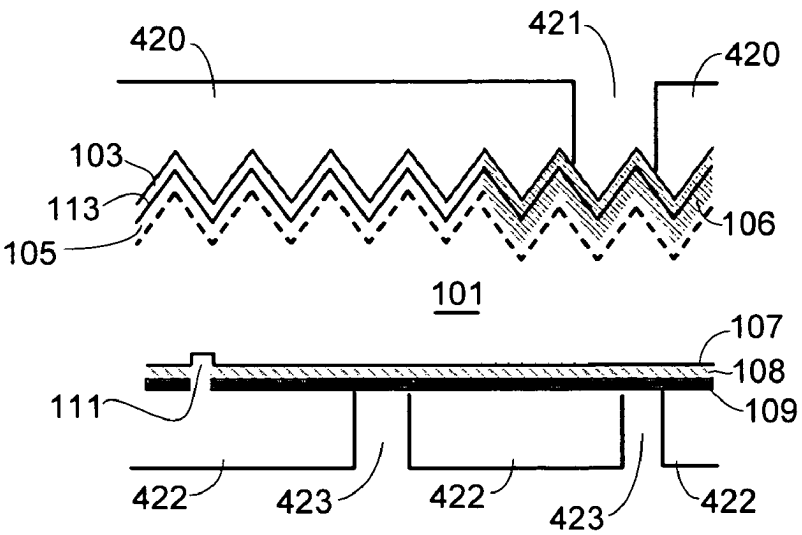

FIG. 4J

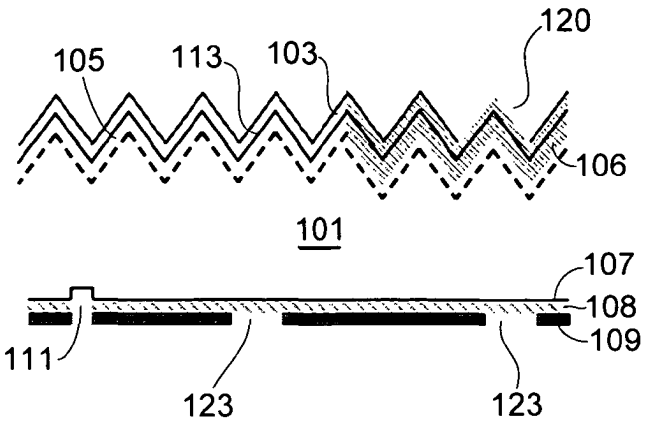

FIG. 4K

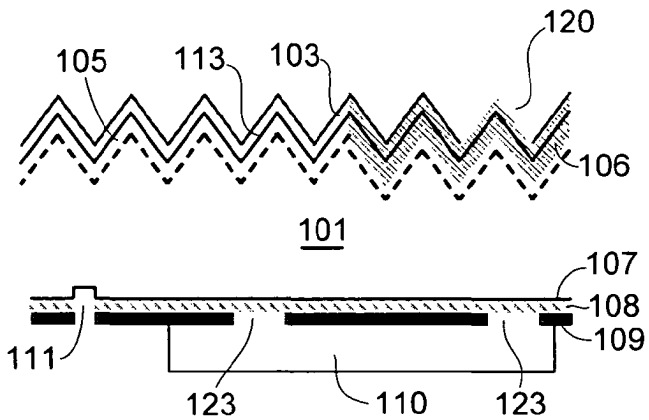

FIG. 4L

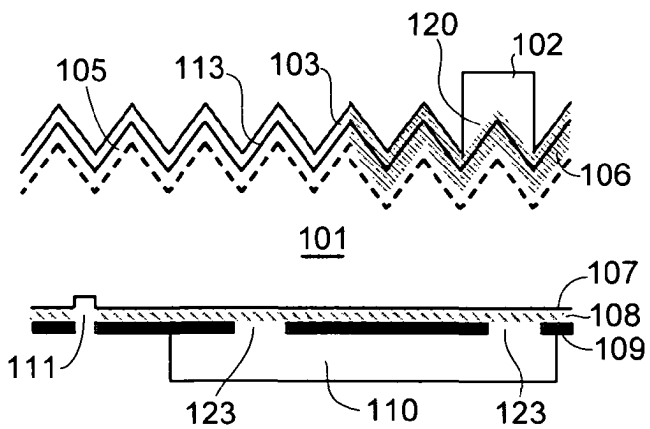

FIG. 4M

FRONT CONTACT SOLAR CELL WITH FORMED EMITTER

STATEMENT REGARDING FEDERALLY SPONSORED RESEARCH OR DEVELOPMENT

The invention described herein was made with Governmental support under contract number DE-FC36-07GO17043 awarded by the United States Department of Energy. The Government may have certain rights in the invention.

BACKGROUND OF THE INVENTION

1. Field of the Invention

The present invention relates generally to solar cells, and more particularly but not exclusively to solar cell fabrication processes and structures.

2. Description of the Background Art

Solar cells are well known devices for converting solar radiation to electrical energy. They may be fabricated on a semiconductor wafer using semiconductor processing technology. A solar cell includes P-type and N-type diffusion regions that form a junction. Solar radiation impinging on the solar cell creates electrons and holes that migrate to the diffusion regions, thereby creating voltage differentials between the diffusion regions. In a backside contact solar cell, both the diffusion regions and the metal contacts coupled to them are on the backside of the solar cell. The metal contacts allow an external electrical circuit to be coupled to and be powered by the solar cell.

In a front contact solar cell, at least one of the metal contacts making an electrical connection to a diffusion region is on the front side of the solar cell. The front side of the solar cell, which is opposite the backside, faces the sun during normal operation to collect solar radiation. While backside contact solar cells have an aesthetic advantage over front contact solar cells due to the absence of metal contacts on the front side, and are thus preferred for residential applications, aesthetics is not a major requirement for power plants and other applications where power generation is the main concern. Disclosed herein are structures for a relatively efficient and cost-effective front contact solar cell and processes for manufacturing same.

SUMMARY

A bipolar solar cell includes a backside junction formed by an N-type silicon substrate and a P-type polysilicon emitter formed on the backside of the solar cell. An antireflection layer may be formed on a textured front surface of the silicon substrate. A negative polarity metal contact on the front side of the solar cell makes an electrical connection to the substrate, while a positive polarity metal contact on the backside of the solar cell makes an electrical connection to the polysilicon emitter. An external electrical circuit may be connected to the negative and positive metal contacts to be powered by the solar cell. The positive polarity metal contact may form an infrared reflecting layer with an underlying dielectric layer for increased solar radiation collection.

These and other features of the present invention will be readily apparent to persons of ordinary skill in the art upon reading the entirety of this disclosure, which includes the accompanying drawings and claims.

DESCRIPTION OF THE DRAWINGS

FIG. **1** schematically shows a cross-section of a solar cell in accordance with an embodiment of the present invention.

FIG. **2** is a plan view schematically showing the front side of the solar cell of FIG. **1**.

FIG. **3** is a plan view schematically showing the backside of the solar cell of FIG. **1**.

FIG. **4**, which comprises FIGS. **4**A-**4**M, schematically illustrates the fabrication of the solar cell of FIG. **1** in accordance with an embodiment of the present invention.

The use of the same reference label in different figures indicates the same or like components. The figures are not drawn to scale.

DETAILED DESCRIPTION

In the present disclosure, numerous specific details are provided, such as examples of apparatus, process parameters, materials, process steps, and structures, to provide a thorough understanding of embodiments of the invention. Persons of ordinary skill in the art will recognize, however, that the invention can be practiced without one or more of the specific details. In other instances, well-known details are not shown or described to avoid obscuring aspects of the invention.

FIG. **1** schematically shows a cross-section of a solar cell **100** in accordance with an embodiment of the present invention. The solar cell **100** has a front side where a metal contact **102** is located and a backside on a same side as the metal contact **110**. The front side faces the sun during normal operation to collect solar radiation.

In the example of FIG. **1**, the solar cell **100** includes a backside junction formed by a P-type doped polysilicon emitter **108** serving as a P-type diffusion region and an N-type silicon substrate **101** serving as an N-type diffusion region. The N-type silicon substrate **101** may comprise a long lifetime (e.g., 2 to 5 ms) N-type silicon wafer and may have a thickness of about 100 to 250 μm as measured from the backside surface to a tip of the textured front side surface of the substrate. The front side surface of the substrate **101** is randomly textured (labeled as **113**) and includes N-type doped regions **105** and **106** formed in the substrate. The N-type doped region **105** provides low front surface recombination and improves lateral conductivity whilst not compromising the blue response of the solar cell. The region **106**, which may be a phosphorus diffusion, provides low contact resistance and minimizes contact recombination. The region **106** is also referred to as an "N-dot" because, in one embodiment, it forms a dot-shape to minimize the area of heavily diffused regions on the front surface. The N-type doped region **105** may have a sheet resistance of 100 to 500 Ω/sq, whilst the n-type doped region **106** may have a sheet resistance of 10 to 50 Ω/sq.

An antireflective coating (ARC) of silicon nitride layer **103** is formed on the textured front side surface of the substrate **101**. The texture front side surface and the silicon nitride layer **103** help improve solar radiation collection efficiency. A passivating oxide **124** may comprise silicon dioxide thermally grown to a thickness of about 10 to 250 Angstroms on the front side surface of the substrate **101**.

In one embodiment, the polysilicon emitter **108** is formed on a tunnel oxide layer **107**. The polysilicon emitter **108** may be formed by forming a layer of polysilicon using Chemical Vapor Deposition (CVD), such as Low Pressure CVD (LPCVD) or Plasma Enhanced CVD (PECVD), and thermal anneal. The polysilicon emitter **108** may have a sheet resistance of 100 Ω/sq, and a thickness of 1000 to 2000 Angstroms. The tunnel oxide layer **107** may comprise silicon dioxide thermally grown to a thickness of about 10 to 50 Angstroms on the backside surface of the substrate **101**. A metal contact **110** electrically connects to the polysilicon

emitter **108** through contact holes **123** formed through a dielectric comprising a silicon dioxide layer **109**. The metal contact **110** provides a positive polarity terminal to allow an external electrical circuit to be coupled to and be powered by the solar cell **100**. The silicon dioxide layer **109** provides electrical isolation and allows the metal contact **110** to serve as an infrared reflecting layer for increased solar radiation collection. In one embodiment, the metal contact **110** comprises silver having a conductance of about 5-25 mΩ.cm and a thickness of about 15-35 μm.

On the front side of the solar cell **100**, the metal contact **102** electrically connects to the region **106** through a contact hole **120** formed through the silicon nitride layer **103**. The metal contact **102** provides a negative polarity terminal to allow an external electrical circuit to be coupled to and be powered by the solar cell **100**. In one embodiment, the metal contact **102** comprises silver having a sheet resistance of about 5 mΩ.cm and a thickness of about 15 μm. The pitch between adjacent metal contacts **102** may be about 1 to 4 mm. In one embodiment, the metal contacts **102** are spaced at 400 to 1000 μm along each metal contact **102** (see FIG. **2**).

In the example of FIG. **1**, the edge isolation trench **111** is formed through the silicon dioxide layer **109**, the polysilicon emitter **108**, and a portion of the substrate **101** to provide edge electrical isolation.

FIG. **2** is a plan view schematically showing the front side of the solar cell **100**. In the example of FIG. **2**, two bus bars **201** run parallel on the front side of the substrate **101**. The contact holes **120**, in which the metal contacts **102** are formed, may each have a diameter of about 50 to 200 μm. A plurality of metal contacts **102** is formed perpendicular to the bus bars **201**. Each metal contact **102** may have a width of about 60-120 μm.

FIG. **3** is a plan view schematically showing the backside of the solar cell **100**. In the example of FIG. **3**, two bus bars **301**, which are electrically coupled to metal contacts **110**, run parallel on the backside. In practice, the bus bars **201** and **301** will be electrically connected to corresponding bus bars of adjacent solar cells to form an array of solar cells.

Solar cells have gained wide acceptance among energy consumers as a viable renewable energy source. Still, to be competitive with other energy sources, a solar cell manufacturer must be able to fabricate an efficient solar cell at relatively low cost. With this goal in mind, a process for manufacturing the solar cell **100** is now discussed with reference to FIGS. **4**A-**4**M.

FIG. **4**, which comprises FIGS. **4**A-**4**M, schematically illustrates the fabrication of the solar cell **100** in accordance with an embodiment of the present invention.

In FIG. **4**A, an N-type silicon substrate **101** is prepared for processing into a solar cell by undergoing a damage etch step. The substrate **101** is in wafer form in this example, and is thus typically received with damaged surfaces due to the sawing process used by the wafer vendor to slice the substrate **101** from its ingot. The substrate **101** may be about 100 to 200 microns thick as received from the wafer vendor. In one embodiment, the damage etch step involves removal of about 10 to 20 μm from each side of the substrate **101** using a wet etch process comprising potassium hydroxide. The damage etch step may also include cleaning of the substrate **101** to remove metal contamination.

In FIG. **4**B, tunnel oxides **402** and **107** are formed on the front and back surfaces, respectively, of the substrate **101**. The tunnel oxides **402** and **107** may comprise silicon dioxide thermally grown to a thickness of about 10 to 50 Angstroms on the surfaces of the N-type silicon substrate **101**. A layer of polysilicon is then formed on the tunnel oxides **402** and **107** to form the polysilicon layer **401** and the polysilicon emitter **108**, respectively. Each of the polysilicon layer **401** and the polysilicon emitter **108** may be formed to a thickness of about 1000 to 2000 Angstroms by CVD.

In FIG. **4**C, a P-type dopant source **461** is formed on the polysilicon emitter **108**. As its name implies, the P-type dopant source **461** provides a source of P-type dopants for diffusion into the polysilicon emitter **108** in a subsequent dopant drive-in step. A dielectric capping layer **462** is formed on the P-type dopant source **461** to prevent dopants from escaping from the backside of the solar cell during the drive-in step. In one embodiment, the P-type dopant source comprises BSG (borosilicate glass) deposited to a thickness of about 500 to 1000 Angstroms by atmospheric pressure CVD (APCVD) and has a dopant concentration of 5 to 10% by weight, while the capping layer **462** comprises undoped silicon dioxide formed to a thickness of about 2000 to 3000 Angstroms also by APCVD.

In FIG. **4**D, the edge isolation trench **111** is formed near the edge of the substrate **101** on the backside. The trench **111** is relatively shallow (e.g., 10 μm deep into the substrate **101**) and provides edge electrical isolation. In one embodiment, the trench **111** is formed by cutting through the capping layer **462**, the P-type dopant source **461**, the polysilicon emitter **108**, the tunnel oxide **107**, and into a shallow portion of the substrate **101** using a laser.

In FIG. **4**E, exposed regions on the front surface of the substrate **101** are randomly textured to form the textured surface **113**. In one embodiment, the front surface of the substrate **101** is textured with random pyramids using a wet etch process comprising potassium hydroxide and isopropyl alcohol.

In FIG. **4**F, an N-type dopant source **412** is formed on regions of the textured surface **113** where contact holes **120** (see FIG. **1**) will be subsequently formed to allow subsequently formed metal contacts **102** to electrically connect to the substrate **101**. As its name implies, the N-type dopant source **412** provides a source of N-type dopants for diffusion into the front side of the substrate **101**. In one embodiment, the N-type dopant source **412** is formed by inkjet printing the dopant material directly onto the substrate **101**.

In one embodiment, the N-type dopant source **412** comprises silicon dioxide doped with phosphorus. Only one N-type dopant source **412** is shown in FIG. **4**F for clarity of illustration. In practice, there are several dot-shaped N-type dopant sources **412**, one for each region where a contact hole **120** is to be formed (see FIG. **2**). This allows formation of several dot shaped N-type doped regions **106** (see FIG. **1**) after a subsequently performed drive-in step now discussed with reference to FIG. **4**G.

In FIG. **4**G, a dopant drive-in step is performed to diffuse N-type dopants from the N-type dopant source **412** into the substrate **101** to form the N-type dope region **106**, to diffuse P-type dopants from the P-type dopant source **461** to the polysilicon emitter **108**, and to diffuse N-type dopants into the front side of the substrate **101** to form the N-type doped region **105**. Silicon dioxide layer **109** represents layers **461** and **462** after the drive-in step. The polysilicon emitter **108** also becomes a P-type doped layer after the drive-in step. The N-type doped region **105** may be formed by exposing the sample of FIG. **4**G to phosphorus in a diffusion furnace, for example. The use of the N-type dopant source **412** allows for a more controlled and concentrated N-type diffusion to the N-type doped region **106**. The thin thermal silicon dioxide layer **124** may be grown on the textured surface **113** during the drive-in process.

The drive-in step to dope the polysilicon emitter **108** on the backside and to form the N-type doped regions **105** and **106** on the front side may be formed in-situ, which in the context of the present disclosure means a single manual (i.e., by fabrication personnel) loading of the substrate **101** in a furnace or other single chamber or multi-chamber processing tool. In one embodiment, the drive-in step is performed in a diffusion furnace. The preceding sequence of steps leading to the drive-in step allows for in-situ diffusion, which advantageously helps in lowering fabrication cost.

It is to be noted that the step of using an N-type dopant source **412** to diffuse dopants into the N-type doped region **106** may be omitted in some applications. That is, in an alternative process, the formation of the N-type dopant source **412** in FIG. **4**F may be omitted. In that case, the N-type doped regions **105** and **106** will be both doped by introduction of an N-type dopant in the diffusion furnace during the drive-in step. All other process steps disclosed herein remain essentially the same.

In FIG. **4**H, the antireflective coating of silicon nitride layer **103** is formed over the textured surface **113** after removal of the N-type dopant source **412**. Besides being an antireflective coating, the silicon nitride layer **103** also advantageously serves as a dielectric, enabling the selective contacts to be formed on the front surface to reduce front surface recombination. The silicon nitride layer **103** may be formed to a thickness of about 450 Angstroms by PECVD, for example.

In FIG. **4**I, a front contact mask **420** is formed on the silicon nitride layer **103** to create a pattern **421** defining the contact holes **120** (see FIG. **1**). The mask **420** may comprise an acid resistance organic material, such as a resist, and formed using a printing process, such as screen printing or inkjet printing.

In FIG. **4**J, a back contact mask **422** is formed on the silicon dioxide layer **109** to create patterns **423** defining the contact holes **123** (see FIG. **1**). Similar to the mask **420**, the mask **422** may comprise an organic material formed using a printing process.

In FIG. **4**K, contact holes **120** and **123** are formed by removing exposed portions of the silicon nitride layer **103** and the silicon dioxide **109** in a contact etch step. In one embodiment, the contact holes **120** are formed by using a selective etch process that removes exposed portions of the silicon nitride layer **103** and stops on the substrate **101**. The same etch process removes exposed portions of the silicon dioxide **109** and stops on the polysilicon emitter **108**. In one embodiment, the etch process comprises a BOE (buffered oxide etch).

In FIG. **4**L, the metal contact **110** is formed on the silicon dioxide layer **109** to fill the contact holes **123** and make electrical connection to the polysilicon emitter **108**. The metal contact **110** may be formed using a printing process. The metal contact **110** may comprise silver, which, together with the silicon dioxide layer **109**, makes an excellent backside infrared reflector. Other metals may also be used as a metal contact **110**, such as aluminum, for example.

In FIG. **4**M, the metal contact **120** is formed on the silicon nitride layer **103** to fill the contact holes **120** and make electrical connection to the substrate **101**. The metal contact **120** may comprise silver and formed using a printing process.

Formation of the metal contacts **110** and **102** may be followed by a firing step. The firing step is applicable when using screen printed silver paste as metal contacts, but not when using other processes or metals. The solar cell **100** may then be visually inspected and tested.

While specific embodiments of the present invention have been provided, it is to be understood that these embodiments are for illustration purposes and not limiting. Many additional embodiments will be apparent to persons of ordinary skill in the art reading this disclosure.

What is claimed is:

1. A solar cell having a front side facing the sun to collect solar radiation during normal operation and a backside opposite the front side, the solar cell comprising:

an N-type silicon substrate;

a textured surface on the N-type silicon substrate on the front side of the solar cell;

an antireflective layer over the textured surface of the N-type silicon substrate;

a P-type polysilicon emitter formed over the N-type silicon substrate and forming a backside junction with the N-type silicon substrate;

an oxide layer formed between the P-type polysilicon emitter and the N-type silicon substrate;

a negative polarity metal contact making an electrical connection to the N-type silicon substrate from the front side of the solar cell; and

a positive polarity metal contact making an electrical connection to the P-type polysilicon emitter from the backside of the solar cell.

2. The solar cell of claim **1** wherein the antireflective layer comprises a layer of silicon nitride.

3. The solar cell of claim **1** further comprising a dielectric layer over the P-type polysilicon emitter.

4. The solar cell of claim **3** wherein the dielectric layer comprises silicon dioxide.

5. The solar cell of claim **3** further comprising a trench cutting through the dielectric layer and the P-type polysilicon emitter and into a portion of the N-type silicon substrate on the backside of the solar cell.

6. The solar cell of claim **1** wherein the positive polarity metal contact comprises a metal forming an infrared reflecting layer with a dielectric layer.

7. The solar cell of claim **1** wherein the positive polarity metal contact comprises silver forming an infrared reflecting layer with a dielectric layer comprising silicon dioxide.

8. The solar cell of claim **1** wherein the negative polarity metal contact comprises a metal formed in a contact hole to the N-type silicon substrate.

9. A solar cell having a front side facing the sun to collect solar radiation during normal operation and a backside opposite the front side, the solar cell comprising:

a substrate having a textured front surface;

an emitter layer formed over a back surface of the substrate, the emitter layer forming a backside junction with the substrate;

an oxide layer formed between the back surface of the substrate and the emitter layer;

a first metal contact making an electrical connection to the substrate on the front side of the solar cell; and

a second metal contact making an electrical connection to the emitter layer on the backside of the solar cell, the first metal contact and the second metal contact being configured to allow an external electrical circuit to be powered by the solar cell.

10. The solar cell of claim **9** further comprising an antireflective layer over the textured front surface of the substrate.

11. The solar cell of claim **9** wherein the substrate comprises an N-type silicon substrate and the emitter layer comprises a P-type doped polysilicon.

12. The solar cell of claim **9** wherein the second metal contact comprises silver formed over a layer of silicon dioxide.

* * * * *