United States Patent [19]

Spitzer

[11] **Patent Number: 4,667,060**

[45] **Date of Patent: May 19, 1987**

[54] **BACK JUNCTION PHOTOVOLTAIC SOLAR CELL**

[75] Inventor: **Mark B. Spitzer**, Lexington, Mass.

[73] Assignee: **Spire Corporation**, Bedford, Mass.

[21] Appl. No.: **737,711**

[22] Filed: **May 28, 1985**

[51] **Int. Cl.**[4] **H01L 31/06**

[52] **U.S. Cl.** **136/255**; 136/256; 357/30

[58] **Field of Search** 136/255, 256; 357/30

[56] **References Cited**

U.S. PATENT DOCUMENTS

4,106,047	8/1978	Lindmayer	136/255
4,131,486	12/1978	Brandhorst, Jr.	136/255
4,131,488	12/1978	Lesk et al.	148/1.5
4,348,254	9/1982	Lindmayer	156/647
4,355,196	10/1982	Chai	136/259

FOREIGN PATENT DOCUMENTS

57-187974	11/1982	Japan	136/255

OTHER PUBLICATIONS

P. G. Borden et al., "The V-Groove Solar Cell", 16th *IEEE Photovoltaic Specialists Conf.* (1982), pp. 574–577.

C. M. Garner et al., "An Interdigitated Back Contact Solar Cell With High-Current Collection", *IEEE Electron Device Letters,* vol. EDL-1 (1980), pp. 256–258.

R. I. Frank et al., "A Low Series Resistance Silicon Photovoltaic Cell for High Intensity Applications", 14th *IEEE Photovoltaic Specialists Conf.* (1980), pp. 423–430.

Primary Examiner—Aaron Weisstuch

Attorney, Agent, or Firm—Morse, Altman & Dacey

[57] **ABSTRACT**

A solar cell of novel construction is disclosed featuring the formation of a p-n junction at its rear surface. This allows for a reduction in series resistance and optimization of the p-n junction. The solar cell has a metallic front contact and is lightly doped to reduce contact resistance at the interface between the front contact and the front surface of the cell. The solar cell preferably is formed of either n-type or p-type silicon, with the p-n junction preferably formed therein by ion implantation. Preferably, the solar cell is about 50 micrometers thick and, possesses a conversion efficiency of at least 15% over an input intensity range of from about one to about 1,000 suns. The solar cell is particularly useful for concentrator solar cells intended for operation at high intensity (in excess of 500 suns).

7 Claims, 6 Drawing Figures

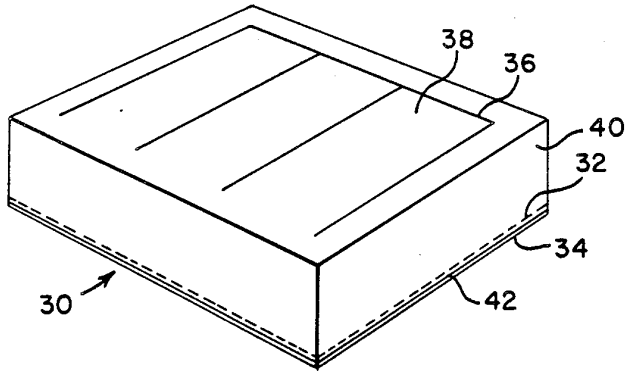

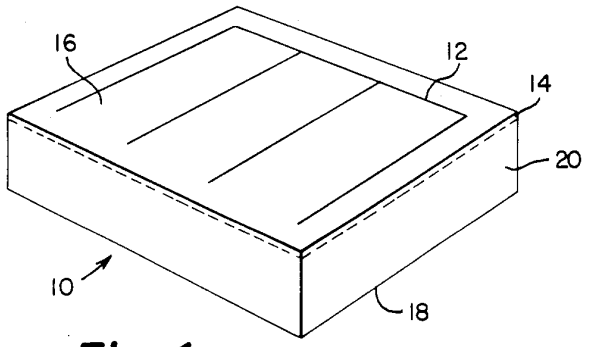

Fig. 1

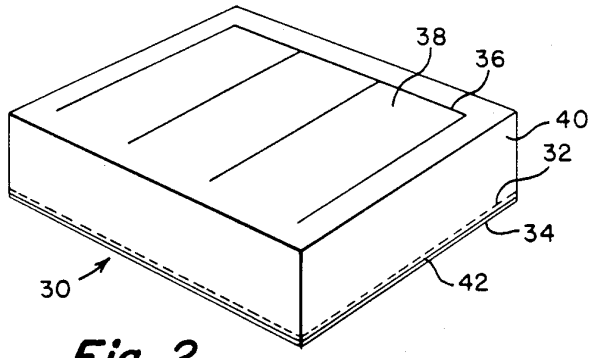

Fig. 2

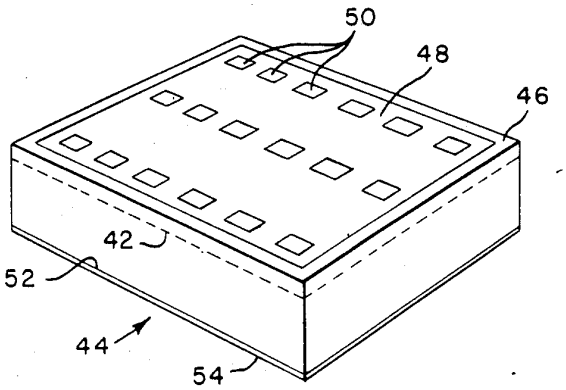

Fig. 3

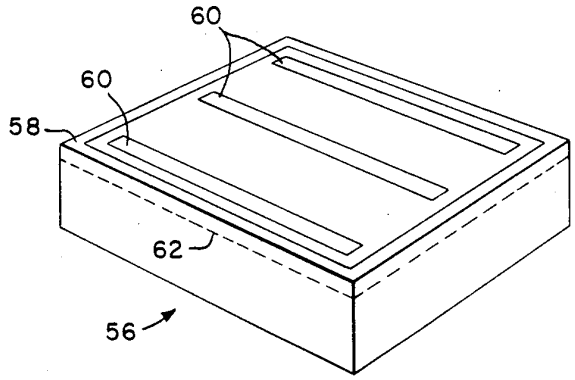

Fig. 4

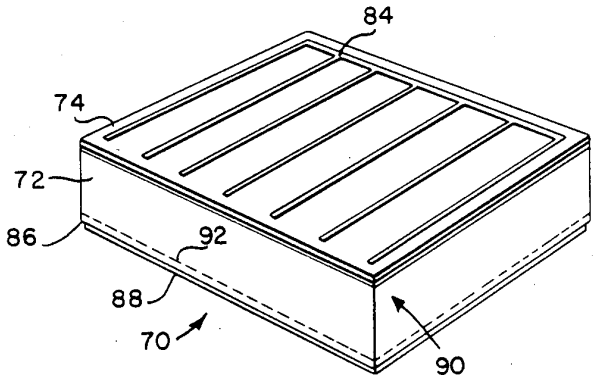

Fig. 5

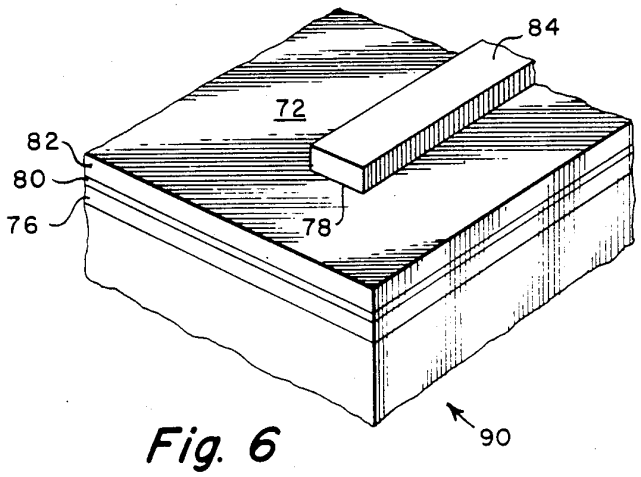

Fig. 6

BACK JUNCTION PHOTOVOLTAIC SOLAR CELL

BACKGROUND OF THE INVENTION

1. Field of the Invention

The present invention relates generally to solar cells and, more particularly, to a back junction photovoltaic solar cell.

2. The Prior Art

Conventional silicon photovoltaic solar cells, intended for operation over an input intensity range of 80 mW/cm^2 to 100 W/cm^2 (approximately 1 sun to 1000 suns), have a conversion efficiency in the range of 15 to 20 percent. Such solar cells, whether they are intended for high or low intensity operation, generally comprise a standard p-n junction formed at the front surface of silicon substrate. A metal grid contact is formed upon the front surface to collect photo-generated current and a full-area contact is applied to the rear surface.

The conventional solar cell has several limitations that are a consequence of the cell design. One important limitation arises at high input intensity because large amounts of current must be conducted from the front surface of the device, through a metal grid contact, to wires or leads that connect the device to an external circuit. Power loss owing to series resistance increases as the square of the current, thus increasing as intensity increases. The metal grid cannot be made arbitrarily large without reducing the photo-generated current, since the grid blocks light from entering the cell. Owing to numerous constraints on grid design that are necessary for both minimizing series resistance and maximizing the amount of light that enters the device, other aspects of cell design, such as junction optimization, cannot also be simultaneously optimized.

An unconventional approach to the reduction of series resistance has been termed the etched multi-vertical-junction (EMVJ) cell. The principal feature of the EMVJ cell is the use of deep channels that extend into the bulk of the substrate. Since the p-n junction and metallization are formed over the front surface of the cell and within these channels, the amount of grid metal is increased without an increase in shadow loss, thus reducing series resistance and resulting in a net gain in efficiency, particularly during operation at very high intensity, during which series resistance is the most important loss mechanism. An alternate approach comprises formation of V-groove across the front surface. Grid metallization placed properly within the grooves has negligible shadow loss, because light blocked by the grid is reflected onto a non-obscured region of the front surface. Neither the V-groove design nor the EMVJ design permit optimization or patterning of the p-n junction. Whereas the conventional cells are limited by series resistance, the foregoing alternatives are limited by low open circuit voltage owing to non-optimal junction design.

A third alternative is the interdigitated back contact (IBC) cell design. The IBC design comprises a back p-n junction cell in which both p and n contacts are in the form of interdigitated grids on the rear surface. The p-n junction is patterned on the rear surface and is in this way similar to the invention disclosed here. However, the IBC design does not separate the grid pattern and the junction pattern and thus the two are constrained in the same way that a front junction grating or pocket cell design is constrained. Thus, the IBC design does not decouple grid and junction designs. The invention disclosed herein overcomes both problems by new device design.

SUMMARY OF THE INVENTION

It is a principal object of the present invention to overcome the above disadvantages by providing a solar cell with a p-n junction formed on its back surface.

More specifically, it is an object of the present invention to provide an improved solar cell comprising a thin semiconductor wafer having front and back surfaces, a p-n junction formed at the back surface, a metallic front contact provided on the front surface, with the front surface lightly doped to reduce contact resistance at the interface of the front contact with the wafer, a layer of silicon dioxide provided on the front surface to reduce the recombination velocity, and an antireflective coating at the front surface. Preferably, the p-n junction formed at the back surface is patterned, formed by ion implantation, and comprises a plurality of pocket junctions. Preferably, the back surface is provided with a grating structure formed of a plurality of parallel lines. Preferably, one or both surfaces of the cell are texture etched, and the back surface is provided with a reflector. Preferably, the solar cell is a concentrator silicon solar cell designed for operation at high intensity input levels exceeding 500 suns.

Other objects of the present invention will in part be obvious and will in part appear hereinafter.

The invention accordingly comprises the solar cell of the present disclosure, its components, parts and their interrelationships, the scope of which will be indicated in the appended claims.

BRIEF DESCRIPTION OF THE DRAWINGS

A fuller understanding of the nature and objects of the present invention will become apparent upon consideration of the following detailed description taken in connection with the accompanying drawings, wherein:

FIG. **1** is a schematic isometric view of a prior art conventional solar cell;

FIG. **2** is a view similar to FIG. **1** but showing a solar cell constructed in accordance with the present invention;

FIG. **3** is a schematic isometric view of a solar cell illustrating a pocket configuration applied to its back surface to form a back junction thereon;

FIG. **4** is a view similar to FIG. **3** but showing an alternate configuration for a back junction:

FIG. **5** is a schematic isometric view of a further embodiment of a solar cell of the invention; and

FIG. **6** is an enlarged corner portion of the cell shown in FIG. **5**.

DETAILED DESCRIPTION OF THE PREFERRED EMBODIMENTS

Conventional solar cells comprise silicon wafers having a p-n junction on the front surface, to which electrical contact is made with a patterned metallic grid. A patterned grid, rather than a full-area contact, is used to permit most of the incident sunlight to enter the silicon. As shown in FIG. **1**, a conventional solar cell **10** has a front grid **12** in contact with a p-n junction **14** (which is sometimes alternately termed an emitter) formed on the front **16** (the front being the face of the solar cell that receives sunlight). Since the front grid **12** must not contact the back surface **18**, patterning of the p-n junction **14** to reduce its area must necessarily be con-

strained by the pattern used to form the front collection grid **12**. A junction design, were it to be patterned to form a grating or pocket structure, would be further constrained by the minority carrier diffusion length, which determines a maximum spacing between junction regions.

The present invention provides a device design that separates the constraints introduced by junction and grid optimization. The invention disclosed herein consists of a new silicon solar cell design wherein the p-n junction is formed on the rear surface of the cell, rather than on the front. The formation of the junction on the rear surface, to which contact is made by full area metallization, decouples the junction design from the front grid pattern design. In this way, the junction and the grid may be independently optimized to achieve both low series resistance and high open circuit voltage.

A solar cell of this type must have high quality surface passivation on the front to preclude surface recombination. The required passivation may be achieved by the combination of a built-in front surface field, formed for example by ion implantation, or diffusion, and a grown silicon dioxide layer. Such a combination can reduce the surface recombination velocity to about 100 cm/sec.

The conversion efficiency of the back junction solar cell is highly dependent upon the silicon used for its fabrication. The ratio of minority carrier diffusion length to cell thickness determines the collection efficiency of the back p-n junction. When this dimensionless ratio is larger than three, most carriers photogenerated at the front of the cell are able to diffuse to the back p-n junction where all photo-generated carriers are collected. Typical but non-limiting values for cells made from 0.3 ohm-cm silicon are: diffusion length of 200 micrometers and cell thickness of 50 micrometers.

The most important attribute of this invention is the absence of grid-related constraints on junction design: the junction may be patterned to form either a grating structure or a pocket structure, or any other configuration. Grating and pocket-type junction patterns are useful for the attainment of high open circuit voltage, since such designs permit reduction of junction area. As noted, in this invention the junction pattern is entirely independent of the front grid pattern.

More often than not, the conventional solar cell **10** is provided with a full surface back contact on its back surface **18**. As is readily apparent from FIG. **1**, the p-n junction **14** must carry photogenerated carriers to the grid **12**. Thus, series resistance of the p-n junction **14** must be minimized, particularly in solar cells intended for high intensity operation. This constraint typically requires heavy doping and a deep junction. Unfortunately, heavy doping limits the open circuit voltage by increasing the device saturation current, and the use of a deep junction reduces the quantum efficiency of the solar cell in the wavelength range of 300 to 600 nm.

A solar cell **30** constructed in accordance with the invention is illustrated in FIG. **2**. In the construction of the solar cell **30**, a p-n junction **32** is formed at the back surface **34** of the cell, with a grid **36** provided at the front surface **38**. Preferably, one or both of the surfaces **34** and **38** are texture etched so as to increase the photon pathlength by refraction. Preferably, the solar cell **30** is formed of a thin semiconductor wafer **40**, which may be formed of an n-type or a p-type silicon.

The use of thin cells **30** (for example, about 50 micrometers thick) reduces the series resistance of the device as well as improves the current collection, since the distance that both majority and minority carries must travel is reduced. Such cells may not absorb all of the available incident photons, particularly if the cells are very thin; thus it is advantageous to utilize a back surface reflector **42** to double the optical pathlength. With the surfaces **34** and/or **38** texture etched, the optical pathlength may be made long, while the distance to the p-n junction **32** that carriers must traverse may be made short.

Thus, the p-n Junction **32** is completely independent of the front grid **36**. Such a design has the following advantages. First, in contrast to the conventional design of cell **10**, current is not made to flow through a thin p-n junction **14** at the cell front **16**; the invention thus reduces series resistance. Second, the p-n junction **32** may be of arbitrary depth or doping, since absorption at the back **34** of the cell **30** is usually not consequential, thus yielding reduction of junction series resistance. Third, the p-n junction **32** may be patterned to form a pocket or a grating structure as hereafter described with reference to FIGS. **3** and **4**, thus reducing p-n saturation current and raising the open circuit voltage of the cell **30**.

FIG. **3** shows a non-limiting example of a solar cell **44** provided with a patterned back junction **50** located in a plane **42**. In this example, the patterned p-n junction **50** is formed by ion implantation on the back surface **46**, which is coated with a silicon dioxide film **48**. The film **48**, which is patterned, acts as an ion implantation mask, allowing only a plurality of exposed portions of the back surface **46** to receive the ion implantation, forming the patterned p-n junction **50**. The oxide film **48** also functions as a separator between the non-implanted back surface **46** and a metal contact, not shown, that is applied later. In the example, the p-n junction pocket array pattern **50** represented by the plurality of exposed portions comprises 10 micrometers$\times$10 micrometers squares on 50 micrometers centers, yielding a factor of **25** reduction of junction area. A metal contact grid **54** is applied to the front surface **52**.

FIG. **4** shows a non-limiting example of a solar cell **56** provided with a patterned back p-n junction in the shape of a grating structure **60** and located in a plane **62** near the back surface **58**. The grating structure **60** comprises a plurality of 2 to 5 micrometers wide lines on 500 micrometers centers, yielding a factor of **100** reduction of junction area. The critical parameter in the design of the junction spacing is the minority carrier diffusion length. The spacing must be much less than one diffusion length in order to achieve high collection efficiency of photons generated in regions far from the p-n junction **62**.

FIGS. **5** and **6** (FIG. **6** being an enlarged corner portion of the device shown within a circle **90** in FIG. **5**) illustrate a non-limiting example of a preferred embodiment of a back junction photovoltaic solar cell **70**, which preferably is a concentrator silicon solar cell constructed in accordance with the invention. The solar cell **70** preferably is formed from a 0.30 ohm-cm phosphorus doped silicon wafer **72**. The front surface **74** is lightly doped with phosphorus, as at **76** just below the surface, to reduce contact resistance at the silicon/metal interface **78**. The front surface **74** is further treated after the phosphorus doping to provide it with a silicon dioxide layer **80**, upon which an antireflection coating **82** is

applied. The silicon dioxide layer **80** reduces the recombination velocity. The front contact **84** comprises successive evaporated layers of Ti and Pd upon which Ag is electroplated. The back surface **86** of the device **70** illustrated in FIG. **5** includes a plurality of ion implanted pocket junctions **92**, as described previously in FIG. **3**. Back surface metallization **88** comprises successive evaporations of Al, Ti, Pd, and Ag. The Al acts as a back surface reflector. The overall thickness of the device **70** is about 50 micrometers.

Thus it has been shown and described preferred embodiments of improved solar cells **30** and **70**, which solar cells **30** and **70** satisfy the objects and advantages set forth above.

Since certain changes may be made in the present disclosure without departing from the scope of the present invention, it is intended that all matter described in the foregoing specification or shown in the accompanying drawings, be interpreted in an illustrative and not in a limiting sence.

What is claimed is:

1. A solar cell comprising:

(a) a semiconductor wafer having a front surface and a back surface; and

(b) a p-n junction provided at said back surface thereof;

(c) said front surface provided with a metallic front contact and being lightly doped to reduce contact resistance at the interface between said metallic front contact and said semiconductor wafer;

(d) said p-n junction at said back surface being patterned;

(e) said solar cell having a conversion efficiency of at least 15% over an input intensity range from about one sun to about 1,000 suns.

2. The solar cell of claim **1** wherein said front surface is further provided with a layer of silicon dioxide to reduce the recombination velocity thereat.

3. The solar cell of claim **2** wherein said front surface is further provided with an antireflective coating and wherein said metallic front contact is formed of successively evaporated layers of titanium and palladium, with a layer of silver being electroplated thereon.

4. The solar cell of claim **1** wherein said light doping at said front surface is effected by phosphorus.

5. The solar cell of claim **1** wherein said p-n junction at said back surface is formed by ion implantation, wherein said ion implanted p-n junction comprises a plurality of ion-implanted pocket junctions, and wherein said ion implanted pocket junctions are formed by a pocket array pattern comprising a plurality of squares, each about ten micrometers square formed on 50 micrometers centers, achieving a reduction in junction area by a factor of 25.

6. The solar cell of claim **1** wherein said back surface is provided with a patterned back p-n junction in the shape of a grating structure comprising a plurality of lines, each from about two micrometers to about five micrometers wide and centered on 500 micrometers, achieving a reduction in junction area by a factor of 100.

7. The solar cell of claim **1** which is a concentrator silicon solar cell designed for operation at high intensity input levels exceeding 500 suns.

* * * * *

UNITED STATES PATENT AND TRADEMARK OFFICE

CERTIFICATE OF CORRECTION

PATENT NO. : 4,667,060

DATED : May 19, 1987

INVENTOR(S) : Mark B. Spitzer

It is certified that error appears in the above-identified patent and that said Letters Patent is hereby corrected as shown below:

In column 1, line 3, before

"Background of the Invention" insert

--The United States Government has rights in this invention pursuant to Contract No. DE-AC04-76DP00789 (Subcontract No. 58-1430) between the United States Department of Energy and Spire Corporation. --

Signed and Sealed this

Thirteenth Day of March, 1990

Attest:

Attesting Officer

JEFFREY M. SAMUELS

Acting Commissioner of Patents and Trademarks