UNITED STATES PATENT AND TRADEMARK OFFICE

UNITED STATES DEPARTMENT OF COMMERCE
United States Patent and Trademark Office
Address: COMMISSIONER FOR PATENTS
P.O. Box 1450
Alexandria, Virginia 22313-1450
www.uspto.gov

APPLICATION NO.	ISSUE DATE	PATENT NO.	ATTORNEY DOCKET NO.	CONFIRMATION NO.
16/789,722	04/19/2022	11306667	CET1090.075	9989

26629 7590 03/30/2022

ZIOLKOWSKI PATENT SOLUTIONS GROUP, SC (ZPS)
136 S WISCONSIN ST
PORT WASHINGTON, WI 53074

ISSUE NOTIFICATION

The projected patent number and issue date are specified above.

Determination of Patent Term Adjustment under 35 U.S.C. 154 (b)
(application filed on or after May 29, 2000)

The Patent Term Adjustment is 0 day(s). Any patent to issue from the above-identified application will include an indication of the adjustment on the front page.

If a Continued Prosecution Application (CPA) was filed in the above-identified application, the filing date that determines Patent Term Adjustment is the filing date of the most recent CPA.

Applicant will be able to obtain more detailed information by accessing the Patent Application Information Retrieval (PAIR) WEB site (http://pair.uspto.gov).

Any questions regarding the Patent Term Extension or Adjustment determination should be directed to the Office of Patent Legal Administration at (571)-272-7702. Questions relating to issue and publication fee payments should be directed to the Application Assistance Unit (AAU) of the Office of Patents Stakeholder Experience (OPSE), Stakeholder Support Division (SSD) at (571)-272-4200.

INVENTOR(s) (Please see PAIR WEB site http://pair.uspto.gov for additional inventors):

Mark J. Sarder, Waukesha, WI;
Leigh Jenison, Hartland, WI;
Ian Schmit, Cedarburg, WI;

APPLICANT(s) (Please see PAIR WEB site http://pair.uspto.gov for additional applicants):

Champion Power Equipment, Inc., Santa Fe Springs, CA;

The United States represents the largest, most dynamic marketplace in the world and is an unparalleled location for business investment, innovation, and commercialization of new technologies. The USA offers tremendous resources and advantages for those who invest and manufacture goods here. Through SelectUSA, our nation works to encourage and facilitate business investment. To learn more about why the USA is the best country in the world to develop technology, manufacture products, and grow your business, visit SelectUSA.gov.

Customer No. 26629
Confirmation No. 9989

Patent
Attorney Docket No. CET1090.075

IN THE UNITED STATES PATENT AND TRADEMARK OFFICE

In re Application of	:	Sarder et al.
Serial No.	:	16/789,722
Filed	:	2/13/2020
For	:	DUAL FUEL SELECTOR SWITCH
Group Art No.	:	3747
Examiner	:	Syed O. Hasan

CERTIFICATION UNDER 37 CFR 1.8(a) and 1.10

I hereby certify that, on the date shown below, this correspondence is being:

Mailing

□ deposited with the US Postal Service in an envelope addressed to Commissioner for Patents, P.O. Box 1450, Alexandria, VA 22313-1450

37 CFR 1.8(a) **37 CFR 1.10**

□ with sufficient postage as first class mail □ As "Express Mail Post Office to Addressee" Mailing Label No.

Transmission

□ transmitted by facsimile to Fax No.: 571-273-8300 addressed to **Examiner Syed O. Hasan** at the Patent and Trademark Office.

■ transmitted by EFS-WEB addressed to **Examiner Syed O. Hasan** at the Patent and Trademark Office.

Date: March 10, 2022 /Robyn L. Templin/
Signature

Commissioner for Patents
P.O. Box 1450
Alexandria, VA 22313-1450

COMMENTS ON STATEMENT OF REASONS FOR ALLOWANCE

Dear Sir or Madame:

Responsive to the Notice of Allowability mailed February 15, 2022, Applicant submits the following remarks responsive to the Examiner's Statement of Reasons for Allowance.

REMARKS

In response to the Examiner's Reasons for Allowance, Applicant believes that a separate Statement of Reasons for Allowance is unnecessary in the present case as the file history sufficiently sets forth the patentable distinctions of claims 1-11 and 13-19.

The patentability of claims 1-11 and 13-19 lies in each claim as a whole. That is, a single particular element or feature of a claim does not define the claim's patentability, but rather, it is the combination of elements and the interconnection therebetween that define the invention. The claims cannot be considered to be limited in scope based on this brief statement by the Examiner. Applicant stands by its position previously set forth in the file history.

Applicant does not acquiesce to the accuracy of the Examiner's statements in the Reasons for Allowance nor the Examiner's partial paraphrasing of the claim elements.

Entry of these remarks is appreciated and Applicant cordially invites the Examiner to respond, should the Examiner disagree.

Respectfully submitted,

/Timothy J. Ziolkowski/

Timothy J. Ziolkowski
Registration No. 38,368
Direct Dial 262-268-8181
tjz@zpspatents.com

Dated: March 10, 2022
Attorney Docket No.: CET1090.075

P.O. ADDRESS:
Ziolkowski Patent Solutions Group, SC
136 South Wisconsin Street
Port Washington, WI 53074
262-268-8100

Champion - EX2109, Page 3 of 403
Generac Power Systems, Inc. et al v. Champion Power Equip., Inc.
IPR2025-01438

UNITED STATES
PATENT AND TRADEMARK OFFICE

P.O. Box 1450
Alexandria, VA 22313 - 1450
www.uspto.gov

ELECTRONIC PAYMENT RECEIPT

APPLICATION #	RECEIPT DATE / TIME	ATTORNEY DOCKET #
16/789,722	03/10/2022 02:35:38 PM ET	CET1090.075

Title of Invention

DUAL FUEL SELECTOR SWITCH

Application Information

APPLICATION TYPE	Utility - Nonprovisional Application under 35 USC 111(a)	PATENT #	-
CONFIRMATION #	9989	FILED BY	Robyn Templin
PATENT CENTER #	60567334	AUTHORIZED BY	Timothy Ziolkowski
CUSTOMER #	26629	FILING DATE	02/13/2020
CORRESPONDENCE ADDRESS	-	FIRST NAMED INVENTOR	Mark J. Sarder

Payment Information

PAYMENT METHOD	PAYMENT TRANSACTION ID	PAYMENT AUTHORIZED BY
CARD / 4529	E202230E36313148	Robyn Templin

FEE CODE	DESCRIPTION	ITEM PRICE($)	QUANTITY	ITEM TOTAL($)
2501	UTILITY ISSUE FEE	600.00	1	600.00
			TOTAL AMOUNT:	$600.00

This Acknowledgement Receipt evidences receipt on the noted date by the USPTO of the indicated documents, characterized by the applicant, and including page counts, where applicable. It serves as evidence of receipt similar to a Post Card, as described in MPEP 503.

New Applications Under 35 U.S.C. 111

If a new application is being filed and the application includes the necessary components for filing date (see 37 CFR 1.53(b)-(d) and MPEP 506), a Filing Receipt (37 CFR 1.54) will be issued in due course and the date shown on this Acknowledgement Receipt will establish the filing date of the application

National Stage of an International Application under 35 U.S.C. 371

If a timely submission to enter the national stage of an international application is compliant with the conditions of 35 U.S.C. 371 and other applicable requirements a Form PCT/DO/EO/903 indicating acceptance of the application as a national stage

submission under 35 U.S.C. 371 will be issued in addition to the Filing Receipt, in due course.

New International Application Filed with the USPTO as a Receiving Office

If a new international application is being filed and the international application includes the necessary components for an international filing date (see PCT Article 11 and MPEP 1810), a Notification of the International Application Number and of the International Filing Date (Form PCT/RO/105) will be issued in due course, subject to prescriptions concerning national security, and the date shown on this Acknowledgement Receipt will establish the international filing date of the application.

UNITED STATES
PATENT AND TRADEMARK OFFICE

P.O. Box 1450
Alexandria, VA 22313 - 1450
www.uspto.gov

ELECTRONIC ACKNOWLEDGEMENT RECEIPT

APPLICATION #	RECEIPT DATE / TIME	ATTORNEY DOCKET #
16/789,722	**03/10/2022 02:35:38 PM ET**	**CET1090.075**

Title of Invention

DUAL FUEL SELECTOR SWITCH

Application Information

APPLICATION TYPE	Utility - Nonprovisional Application under 35 USC 111(a)	PATENT #	-
CONFIRMATION #	9989	FILED BY	Robyn Templin
PATENT CENTER #	60567334	FILING DATE	02/13/2020
CUSTOMER #	26629	FIRST NAMED INVENTOR	Mark J. Sarder
CORRESPONDENCE ADDRESS	-	AUTHORIZED BY	Timothy Ziolkowski

Documents

TOTAL DOCUMENTS: 2

DOCUMENT	PAGES	DESCRIPTION	SIZE (KB)
2022.03.10 Issue Fee.pdf	1	Issue Fee Payment (PTO-85B)	197 KB
2022.03.10 Comments on Reasons.pdf	2	Miscellaneous Incoming Letter	126 KB

Digest

DOCUMENT	MESSAGE DIGEST(SHA-512)
2022.03.10 Issue Fee.pdf	CA5BCADA6923433508265D78ABB32ACD57D1F2AB849A53ACED79DFB2427C30B857309ADC0FC05728619E867CDADD6EED9BD8FA55B4F6BC5BF48BCE141F6CA47D

2022.03.10 Comments on Reasons.pdf	BBEF97C179DBEC12DE2296EBB07F5C302CE04A0CB381C5F10531A0A1D114E6EC273FECF52819D6DBE10E77B63DD08A777BCC10EB7A7F9716B06CDFB7C95D1371

This Acknowledgement Receipt evidences receipt on the noted date by the USPTO of the indicated documents, characterized by the applicant, and including page counts, where applicable. It serves as evidence of receipt similar to a Post Card, as described in MPEP 503.

New Applications Under 35 U.S.C. 111

If a new application is being filed and the application includes the necessary components for filing date (see 37 CFR 1.53(b)-(d) and MPEP 506), a Filing Receipt (37 CFR 1.54) will be issued in due course and the date shown on this Acknowledgement Receipt will establish the filing date of the application

National Stage of an International Application under 35 U.S.C. 371

If a timely submission to enter the national stage of an international application is compliant with the conditions of 35 U.S.C. 371 and other applicable requirements a Form PCT/DO/EO/903 indicating acceptance of the application as a national stage submission under 35 U.S.C. 371 will be issued in addition to the Filing Receipt, in due course.

New International Application Filed with the USPTO as a Receiving Office

If a new international application is being filed and the international application includes the necessary components for an international filing date (see PCT Article 11 and MPEP 1810), a Notification of the International Application Number and of the International Filing Date (Form PCT/RO/105) will be issued in due course, subject to prescriptions concerning national security, and the date shown on this Acknowledgement Receipt will establish the international filing date of the application.

PART B - FEE(S) TRANSMITTAL

Complete and send this form, together with applicable fee(s), by mail or fax, or via EFS-Web.

By mail, send to: Mail Stop ISSUE FEE
Commissioner for Patents
P.O. Box 1450
Alexandria, Virginia 22313-1450

By fax, send to: (571)-273-2885

INSTRUCTIONS: This form should be used for transmitting the ISSUE FEE and PUBLICATION FEE (if required). Blocks 1 through 5 should be completed where appropriate. All further correspondence including the Patent, advance orders and notification of maintenance fees will be mailed to the current correspondence address as indicated unless corrected below or directed otherwise in Block 1, by (a) specifying a new correspondence address; and/or (b) indicating a separate "FEE ADDRESS" for maintenance fee notifications.

CURRENT CORRESPONDENCE ADDRESS (Note: Use Block 1 for any change of address)

26629 7590 02/15/2022
ZIOLKOWSKI PATENT SOLUTIONS GROUP, SC (ZPS)
136 S WISCONSIN ST
PORT WASHINGTON, WI 53074

Note: A certificate of mailing can only be used for domestic mailings of the Fee(s) Transmittal. This certificate cannot be used for any other accompanying papers. Each additional paper, such as an assignment or formal drawing, must have its own certificate of mailing or transmission.

Certificate of Mailing or Transmission

I hereby certify that this Fee(s) Transmittal is being deposited with the United States Postal Service with sufficient postage for first class mail in an envelope addressed to the Mail Stop ISSUE FEE address above, or being transmitted to the USPTO via EFS-Web or by facsimile to (571) 273-2885, on the date below.

Robyn L. Templin	(Typed or printed name)
/Robyn L. Templin/	(Signature)
March 10, 2022	(Date)

APPLICATION NO.	FILING DATE	FIRST NAMED INVENTOR	ATTORNEY DOCKET NO.	CONFIRMATION NO.
16/789,722	02/13/2020	Mark J. Sarder	CET1090.075	9989

TITLE OF INVENTION: DUAL FUEL SELECTOR SWITCH

APPLN. TYPE	ENTITY STATUS	ISSUE FEE DUE	PUBLICATION FEE DUE	PREV. PAID ISSUE FEE	TOTAL FEE(S) DUE	DATE DUE
nonprovisional	SMALL	$600	$0.00	$0.00	$600	05/16/2022

EXAMINER	ART UNIT	CLASS-SUBCLASS
HASAN, SYED O	3747	137-637000

1. Change of correspondence address or indication of "Fee Address" (37 CFR 1.363).

❑ Change of correspondence address (or Change of Correspondence Address form PTO/AIA/122 or PTO/SB/122) attached.

❑ "Fee Address" indication (or "Fee Address" Indication form PTO/AIA/47 or PTO/SB/47; Rev 03-02 or more recent) attached. **Use of a Customer Number is required.**

2. For printing on the patent front page, list
(1) The names of up to 3 registered patent attorneys or agents OR, alternatively,
(2) The name of a single firm (having as a member a registered attorney or agent) and the names of up to 2 registered patent attorneys or agents. If no name is listed, no name will be printed.

1 Ziolkowski Patent Solutions Group, SC
2
3

3. ASSIGNEE NAME AND RESIDENCE DATA TO BE PRINTED ON THE PATENT (print or type)

PLEASE NOTE: Unless an assignee is identified below, no assignee data will appear on the patent. If an assignee is identified below, the document must have been previously recorded, or filed for recordation, as set forth in 37 CFR 3.11 and 37 CFR 3.81(a). Completion of this form is NOT a substitute for filing an assignment.

(A) NAME OF ASSIGNEE: Champion Power Equipment, Inc.

(B) RESIDENCE: (CITY and STATE OR COUNTRY): Sante Fe Springs, CA

Please check the appropriate assignee category or categories (will not be printed on the patent) : ❑ Individual ☒ Corporation or other private group entity ❑ Government

4a. Fees submitted: ☒ Issue Fee ❑ Publication Fee (if required) ❑ Advance Order - # of Copies _____

4b. Method of Payment: *(Please first reapply any previously paid fee shown above)*

☒ Electronic Payment via EFS-Web ❑ Enclosed check ❑ Non-electronic payment by credit card (Attach form PTO-2038)

❑ The Director is hereby authorized to charge the required fee(s), any deficiency, or credit any overpayment to Deposit Account No. _____

5. **Change in Entity Status** (from status indicated above)

❑ Applicant certifying micro entity status. See 37 CFR 1.29

❑ Applicant asserting small entity status. See 37 CFR 1.27

❑ Applicant changing to regular undiscounted fee status.

NOTE: Absent a valid certification of Micro Entity Status (see forms PTO/SB/15A and 15B), issue fee payment in the micro entity amount will not be accepted at the risk of application abandonment.
NOTE: If the application was previously under micro entity status, checking this box will be taken to be a notification of loss of entitlement to micro entity status.
NOTE: Checking this box will be taken to be a notification of loss of entitlement to small or micro entity status, as applicable.

NOTE: This form must be signed in accordance with 37 CFR 1.31 and 1.33. See 37 CFR 1.4 for signature requirements and certifications.

Authorized Signature /Timothy J. Ziolkowski/ Date March 10, 2022

Typed or printed name Timothy J. Ziolkowski Registration No. 38,368

Champion - EX2109, Page 8 of 403
Generac Power Systems, Inc. et al. v. Champion Power Equip. Inc.
IPR2025-01438

UNITED STATES PATENT AND TRADEMARK OFFICE
COMMISSIONER FOR PATENTS
P.O.BOX 1450
ALEXANDRIA VA 22313-1451

PRESORTED
FIRST-CLASS MAIL
U.S. POSTAGE PAID
POSTEDIGITAL
NNNNN

ZIOLKOWSKI PATENT SOLUTIONS GROUP, SC (ZPS)
136 S WISCONSIN ST
PORT WASHINGTON, WI 53074

Courtesy Reminder for
Application Serial No: 16/789,722

Attorney Docket No: CET1090.075
Customer Number: 26629
Date of Electronic Notification: 02/15/2022

This is a courtesy reminder that new correspondence is available for this application. If you have not done so already, please review the correspondence. The official date of notification of the outgoing correspondence will be indicated on the form PTOL-90 accompanying the correspondence.

An email notification regarding the correspondence was sent to the following email address(es) associated with your customer number:
jmf@zpspatents.com
lje@zpspatents.com
info@zpspatents.com

To view your correspondence online or update your email addresses, please visit us anytime at **https://ppair-my.uspto.gov/pair/PrivatePair.**
If you have any questions, please email the Electronic Business Center (EBC) at EBC@uspto.gov or call 1-866-217-9197.

UNITED STATES PATENT AND TRADEMARK OFFICE

UNITED STATES DEPARTMENT OF COMMERCE
United States Patent and Trademark Office
Address: COMMISSIONER FOR PATENTS
P.O. Box 1450
Alexandria, Virginia 22313-1450
www.uspto.gov

NOTICE OF ALLOWANCE AND FEE(S) DUE

26629 7590 02/15/2022
ZIOLKOWSKI PATENT SOLUTIONS GROUP, SC (ZPS)
136 S WISCONSIN ST
PORT WASHINGTON, WI 53074

EXAMINER
HASAN, SYED O

ART UNIT	PAPER NUMBER
3747	

DATE MAILED: 02/15/2022

APPLICATION NO.	FILING DATE	FIRST NAMED INVENTOR	ATTORNEY DOCKET NO.	CONFIRMATION NO.
16/789,722	02/13/2020	Mark J. Sarder	CET1090.075	9989

TITLE OF INVENTION: DUAL FUEL SELECTOR SWITCH

APPLN. TYPE	ENTITY STATUS	ISSUE FEE DUE	PUBLICATION FEE DUE	PREV. PAID ISSUE FEE	TOTAL FEE(S) DUE	DATE DUE
nonprovisional	SMALL	$600	$0.00	$0.00	$600	05/16/2022

THE APPLICATION IDENTIFIED ABOVE HAS BEEN EXAMINED AND IS ALLOWED FOR ISSUANCE AS A PATENT. PROSECUTION ON THE MERITS IS CLOSED. THIS NOTICE OF ALLOWANCE IS NOT A GRANT OF PATENT RIGHTS. THIS APPLICATION IS SUBJECT TO WITHDRAWAL FROM ISSUE AT THE INITIATIVE OF THE OFFICE OR UPON PETITION BY THE APPLICANT. SEE 37 CFR 1.313 AND MPEP 1308.

THE ISSUE FEE AND PUBLICATION FEE (IF REQUIRED) MUST BE PAID WITHIN THREE MONTHS FROM THE MAILING DATE OF THIS NOTICE OR THIS APPLICATION SHALL BE REGARDED AS ABANDONED. THIS STATUTORY PERIOD CANNOT BE EXTENDED. SEE 35 U.S.C. 151. THE ISSUE FEE DUE INDICATED ABOVE DOES NOT REFLECT A CREDIT FOR ANY PREVIOUSLY PAID ISSUE FEE IN THIS APPLICATION. IF AN ISSUE FEE HAS PREVIOUSLY BEEN PAID IN THIS APPLICATION (AS SHOWN ABOVE), THE RETURN OF PART B OF THIS FORM WILL BE CONSIDERED A REQUEST TO REAPPLY THE PREVIOUSLY PAID ISSUE FEE TOWARD THE ISSUE FEE NOW DUE.

HOW TO REPLY TO THIS NOTICE:

I. Review the ENTITY STATUS shown above. If the ENTITY STATUS is shown as SMALL or MICRO, verify whether entitlement to that entity status still applies.

If the ENTITY STATUS is the same as shown above, pay the TOTAL FEE(S) DUE shown above.

If the ENTITY STATUS is changed from that shown above, on PART B - FEE(S) TRANSMITTAL, complete section number 5 titled "Change in Entity Status (from status indicated above)".

For purposes of this notice, small entity fees are 1/2 the amount of undiscounted fees, and micro entity fees are 1/2 the amount of small entity fees.

II. PART B - FEE(S) TRANSMITTAL, or its equivalent, must be completed and returned to the United States Patent and Trademark Office (USPTO) with your ISSUE FEE and PUBLICATION FEE (if required). If you are charging the fee(s) to your deposit account, section "4b" of Part B - Fee(s) Transmittal should be completed. If an equivalent of Part B is filed, a request to reapply a previously paid issue fee must be clearly made, and delays in processing may occur due to the difficulty in recognizing the paper as an equivalent of Part B.

III. All communications regarding this application must give the application number. Please direct all communications prior to issuance to Mail Stop ISSUE FEE unless advised to the contrary.

IMPORTANT REMINDER: Maintenance fees are due in utility patents issuing on applications filed on or after Dec. 12, 1980. It is patentee's responsibility to ensure timely payment of maintenance fees when due. More information is available at www.uspto.gov/PatentMaintenanceFees.

Champion - EX2109, Page 10 of 403
Generac Power Systems, Inc. et al v. Champion Power Equip., Inc.
IPR2025-01438

PART B - FEE(S) TRANSMITTAL

Complete and send this form, together with applicable fee(s), by mail or fax, or via EFS-Web.

By mail, send to: Mail Stop ISSUE FEE
Commissioner for Patents
P.O. Box 1450
Alexandria, Virginia 22313-1450

By fax, send to: (571)-273-2885

INSTRUCTIONS: This form should be used for transmitting the ISSUE FEE and PUBLICATION FEE (if required). Blocks 1 through 5 should be completed where appropriate. All further correspondence including the Patent, advance orders and notification of maintenance fees will be mailed to the current correspondence address as indicated unless corrected below or directed otherwise in Block 1, by (a) specifying a new correspondence address; and/or (b) indicating a separate "FEE ADDRESS" for maintenance fee notifications.

CURRENT CORRESPONDENCE ADDRESS (Note: Use Block 1 for any change of address)

26629 7590 02/15/2022
ZIOLKOWSKI PATENT SOLUTIONS GROUP, SC (ZPS)
136 S WISCONSIN ST
PORT WASHINGTON, WI 53074

Note: A certificate of mailing can only be used for domestic mailings of the Fee(s) Transmittal. This certificate cannot be used for any other accompanying papers. Each additional paper, such as an assignment or formal drawing, must have its own certificate of mailing or transmission.

Certificate of Mailing or Transmission

I hereby certify that this Fee(s) Transmittal is being deposited with the United States Postal Service with sufficient postage for first class mail in an envelope addressed to the Mail Stop ISSUE FEE address above, or being transmitted to the USPTO via EFS-Web or by facsimile to (571) 273-2885, on the date below.

(Typed or printed name)

(Signature)

(Date)

APPLICATION NO.	FILING DATE	FIRST NAMED INVENTOR	ATTORNEY DOCKET NO.	CONFIRMATION NO.
16/789,722	02/13/2020	Mark J. Sarder	CET1090.075	9989

TITLE OF INVENTION: DUAL FUEL SELECTOR SWITCH

APPLN. TYPE	ENTITY STATUS	ISSUE FEE DUE	PUBLICATION FEE DUE	PREV. PAID ISSUE FEE	TOTAL FEE(S) DUE	DATE DUE
nonprovisional	SMALL	$600	$0.00	$0.00	$600	05/16/2022

EXAMINER	ART UNIT	CLASS-SUBCLASS
HASAN, SYED O	3747	137-637000

1. Change of correspondence address or indication of "Fee Address" (37 CFR 1.363).

❑ Change of correspondence address (or Change of Correspondence Address form PTO/AIA/122 or PTO/SB/122) attached.

❑ "Fee Address" indication (or "Fee Address" Indication form PTO/AIA/47 or PTO/SB/47; Rev 03-02 or more recent) attached. **Use of a Customer Number is required.**

2. For printing on the patent front page, list
(1) The names of up to 3 registered patent attorneys or agents OR, alternatively,
(2) The name of a single firm (having as a member a registered attorney or agent) and the names of up to 2 registered patent attorneys or agents. If no name is listed, no name will be printed.

1_____
2_____
3_____

3. ASSIGNEE NAME AND RESIDENCE DATA TO BE PRINTED ON THE PATENT (print or type)

PLEASE NOTE: Unless an assignee is identified below, no assignee data will appear on the patent. If an assignee is identified below, the document must have been previously recorded, or filed for recordation, as set forth in 37 CFR 3.11 and 37 CFR 3.81(a). Completion of this form is NOT a substitute for filing an assignment.

(A) NAME OF ASSIGNEE (B) RESIDENCE: (CITY and STATE OR COUNTRY)

Please check the appropriate assignee category or categories (will not be printed on the patent) : ❑ Individual ❑ Corporation or other private group entity ❑ Government

4a. Fees submitted: ❑Issue Fee ❑Publication Fee (if required) ❑Advance Order - # of Copies _____

4b. Method of Payment: *(Please first reapply any previously paid fee shown above)*

❑ Electronic Payment via EFS-Web ❑ Enclosed check ❑ Non-electronic payment by credit card (Attach form PTO-2038)

❑ The Director is hereby authorized to charge the required fee(s), any deficiency, or credit any overpayment to Deposit Account No. _____

5. **Change in Entity Status** (from status indicated above)

❑ Applicant certifying micro entity status. See 37 CFR 1.29

❑ Applicant asserting small entity status. See 37 CFR 1.27

❑ Applicant changing to regular undiscounted fee status.

NOTE: Absent a valid certification of Micro Entity Status (see forms PTO/SB/15A and 15B), issue fee payment in the micro entity amount will not be accepted at the risk of application abandonment.
NOTE: If the application was previously under micro entity status, checking this box will be taken to be a notification of loss of entitlement to micro entity status.
NOTE: Checking this box will be taken to be a notification of loss of entitlement to small or micro entity status, as applicable.

NOTE: This form must be signed in accordance with 37 CFR 1.31 and 1.33. See 37 CFR 1.4 for signature requirements and certifications.

Authorized Signature _____ Date _____

Typed or printed name _____ Registration No. _____

Champion - EX2109, Page 11 of 403
Generac Power Systems, Inc. et al. v. Champion Power Equip. Inc.
IPR2025-01438

UNITED STATES DEPARTMENT OF COMMERCE
United States Patent and Trademark Office
Address: COMMISSIONER FOR PATENTS
P.O. Box 1450
Alexandria, Virginia 22313-1450
www.uspto.gov

APPLICATION NO.	FILING DATE	FIRST NAMED INVENTOR	ATTORNEY DOCKET NO.	CONFIRMATION NO.
16/789,722	02/13/2020	Mark J. Sarder	CET1090.075	9989

26629 7590 02/15/2022
ZIOLKOWSKI PATENT SOLUTIONS GROUP, SC (ZPS)
136 S WISCONSIN ST
PORT WASHINGTON, WI 53074

EXAMINER
HASAN, SYED O

ART UNIT	PAPER NUMBER
3747	

DATE MAILED: 02/15/2022

Determination of Patent Term Adjustment under 35 U.S.C. 154 (b)
(Applications filed on or after May 29, 2000)

The Office has discontinued providing a Patent Term Adjustment (PTA) calculation with the Notice of Allowance.

Section 1(h)(2) of the AIA Technical Corrections Act amended 35 U.S.C. 154(b)(3)(B)(i) to eliminate the requirement that the Office provide a patent term adjustment determination with the notice of allowance. See Revisions to Patent Term Adjustment, 78 Fed. Reg. 19416, 19417 (Apr. 1, 2013). Therefore, the Office is no longer providing an initial patent term adjustment determination with the notice of allowance. The Office will continue to provide a patent term adjustment determination with the Issue Notification Letter that is mailed to applicant approximately three weeks prior to the issue date of the patent, and will include the patent term adjustment on the patent. Any request for reconsideration of the patent term adjustment determination (or reinstatement of patent term adjustment) should follow the process outlined in 37 CFR 1.705.

Any questions regarding the Patent Term Extension or Adjustment determination should be directed to the Office of Patent Legal Administration at (571)-272-7702. Questions relating to issue and publication fee payments should be directed to the Customer Service Center of the Office of Patent Publication at 1-(888)-786-0101 or (571)-272-4200.

OMB Clearance and PRA Burden Statement for PTOL-85 Part B

The Paperwork Reduction Act (PRA) of 1995 requires Federal agencies to obtain Office of Management and Budget approval before requesting most types of information from the public. When OMB approves an agency request to collect information from the public, OMB (i) provides a valid OMB Control Number and expiration date for the agency to display on the instrument that will be used to collect the information and (ii) requires the agency to inform the public about the OMB Control Number's legal significance in accordance with 5 CFR 1320.5(b).

The information collected by PTOL-85 Part B is required by 37 CFR 1.311. The information is required to obtain or retain a benefit by the public which is to file (and by the USPTO to process) an application. Confidentiality is governed by 35 U.S.C. 122 and 37 CFR 1.14. This collection is estimated to take 30 minutes to complete, including gathering, preparing, and submitting the completed application form to the USPTO. Time will vary depending upon the individual case. Any comments on the amount of time you require to complete this form and/or suggestions for reducing this burden, should be sent to the Chief Information Officer, U.S. Patent and Trademark Office, U.S. Department of Commerce, P.O. Box 1450, Alexandria, Virginia 22313-1450. DO NOT SEND FEES OR COMPLETED FORMS TO THIS ADDRESS. SEND TO: Commissioner for Patents, P.O. Box 1450, Alexandria, Virginia 22313-1450. Under the Paperwork Reduction Act of 1995, no persons are required to respond to a collection of information unless it displays a valid OMB control number.

Privacy Act Statement

The Privacy Act of 1974 (P.L. 93-579) requires that you be given certain information in connection with your submission of the attached form related to a patent application or patent. Accordingly, pursuant to the requirements of the Act, please be advised that: (1) the general authority for the collection of this information is 35 U.S.C. 2(b)(2); (2) furnishing of the information solicited is voluntary; and (3) the principal purpose for which the information is used by the U.S. Patent and Trademark Office is to process and/or examine your submission related to a patent application or patent. If you do not furnish the requested information, the U.S. Patent and Trademark Office may not be able to process and/or examine your submission, which may result in termination of proceedings or abandonment of the application or expiration of the patent.

The information provided by you in this form will be subject to the following routine uses:

1. The information on this form will be treated confidentially to the extent allowed under the Freedom of Information Act (5 U.S.C. 552) and the Privacy Act (5 U.S.C 552a). Records from this system of records may be disclosed to the Department of Justice to determine whether disclosure of these records is required by the Freedom of Information Act.
2. A record from this system of records may be disclosed, as a routine use, in the course of presenting evidence to a court, magistrate, or administrative tribunal, including disclosures to opposing counsel in the course of settlement negotiations.
3. A record in this system of records may be disclosed, as a routine use, to a Member of Congress submitting a request involving an individual, to whom the record pertains, when the individual has requested assistance from the Member with respect to the subject matter of the record.
4. A record in this system of records may be disclosed, as a routine use, to a contractor of the Agency having need for the information in order to perform a contract. Recipients of information shall be required to comply with the requirements of the Privacy Act of 1974, as amended, pursuant to 5 U.S.C. 552a(m).
5. A record related to an International Application filed under the Patent Cooperation Treaty in this system of records may be disclosed, as a routine use, to the International Bureau of the World Intellectual Property Organization, pursuant to the Patent Cooperation Treaty.
6. A record in this system of records may be disclosed, as a routine use, to another federal agency for purposes of National Security review (35 U.S.C. 181) and for review pursuant to the Atomic Energy Act (42 U.S.C. 218(c)).
7. A record from this system of records may be disclosed, as a routine use, to the Administrator, General Services, or his/her designee, during an inspection of records conducted by GSA as part of that agency's responsibility to recommend improvements in records management practices and programs, under authority of 44 U.S.C. 2904 and 2906. Such disclosure shall be made in accordance with the GSA regulations governing inspection of records for this purpose, and any other relevant (i.e., GSA or Commerce) directive. Such disclosure shall not be used to make determinations about individuals.
8. A record from this system of records may be disclosed, as a routine use, to the public after either publication of the application pursuant to 35 U.S.C. 122(b) or issuance of a patent pursuant to 35 U.S.C. 151. Further, a record may be disclosed, subject to the limitations of 37 CFR 1.14, as a routine use, to the public if the record was filed in an application which became abandoned or in which the proceedings were terminated and which application is referenced by either a published application, an application open to public inspection or an issued patent.
9. A record from this system of records may be disclosed, as a routine use, to a Federal, State or local law enforcement agency, if the USPTO becomes aware of a violation or potential violation of law or regulation.

Notice of Allowability	Application No. 16/789,722	Applicant(s) Sarder et al.	
	Examiner SYED O HASAN	Art Unit 3747	AIA (FITF) Status Yes

-- The MAILING DATE of this communication appears on the cover sheet with the correspondence address--

All claims being allowable, PROSECUTION ON THE MERITS IS (OR REMAINS) CLOSED in this application. If not included herewith (or previously mailed), a Notice of Allowance (PTOL-85) or other appropriate communication will be mailed in due course. **THIS NOTICE OF ALLOWABILITY IS NOT A GRANT OF PATENT RIGHTS.** This application is subject to withdrawal from issue at the initiative of the Office or upon petition by the applicant. See 37 CFR 1.313 and MPEP 1308.

1. ☑ This communication is responsive to 2/4/2022.
   ☐ A declaration(s)/affidavit(s) under **37 CFR 1.130(b)** was/were filed on _____.

2. ☐ An election was made by the applicant in response to a restriction requirement set forth during the interview on _____; the restriction requirement and election have been incorporated into this action.

3. ☑ The allowed claim(s) is/are 1-11 and 13-19 . As a result of the allowed claim(s), you may be eligible to benefit from the **Patent Prosecution Highway** program at a participating intellectual property office for the corresponding application. For more information , please see **http://www.uspto.gov/patents/init_events/pph/index.jsp** or send an inquiry to **PPHfeedback@uspto.gov.**

4. ☐ Acknowledgment is made of a claim for foreign priority under 35 U.S.C. § 119(a)-(d) or (f).

   Certified copies:

   a) ☐ All b) ☐ Some* c) ☐ None of the:

   1. ☐ Certified copies of the priority documents have been received.
   2. ☐ Certified copies of the priority documents have been received in Application No. _____ .
   3. ☐ Copies of the certified copies of the priority documents have been received in this national stage application from the International Bureau (PCT Rule 17.2(a)).

   * Certified copies not received: _____ .

Applicant has THREE MONTHS FROM THE "MAILING DATE" of this communication to file a reply complying with the requirements noted below. Failure to timely comply will result in ABANDONMENT of this application.
THIS THREE-MONTH PERIOD IS NOT EXTENDABLE.

5. ☐ CORRECTED DRAWINGS (as "replacement sheets") must be submitted.
   ☐ including changes required by the attached Examiner's Amendment / Comment or in the Office action of Paper No./Mail Date _____ .

   Identifying indicia such as the application number (see 37 CFR 1.84(c)) should be written on the drawings in the front (not the back) of each sheet. Replacement sheet(s) should be labeled as such in the header according to 37 CFR 1.121(d).

6. ☐ DEPOSIT OF and/or INFORMATION about the deposit of BIOLOGICAL MATERIAL must be submitted. Note the attached Examiner's comment regarding REQUIREMENT FOR THE DEPOSIT OF BIOLOGICAL MATERIAL.

Attachment(s)

1. ☑ Notice of References Cited (PTO-892)
2. ☐ Information Disclosure Statements (PTO/SB/08), Paper No./Mail Date _____.
3. ☐ Examiner's Comment Regarding Requirement for Deposit of Biological Material _____.
4. ☑ Interview Summary (PTO-413), Paper No./Mail Date. 2/4/2022.
5. ☑ Examiner's Amendment/Comment
6. ☑ Examiner's Statement of Reasons for Allowance
7. ☐ Other _____.

/SYED O HASAN/
Primary Examiner, Art Unit 3747

DETAILED ACTION

1. This action is in response to applicant's phone call received on 2/4/2022. Amended claim 10 is acknowledged and the following notice of allowability is formulated. Claim 12 is cancelled.

Notice of Pre-AIA or AIA Status

2. The present application, filed on or after March 16, 2013, is being examined under the first inventor to file provisions of the AIA.

EXAMINER'S AMENDMENT

3. An examiner's amendment to the record appears below. Should the changes and/or additions be unacceptable to applicant, an amendment may be filed as provided by 37 CFR 1.312. To ensure consideration of such an amendment, it MUST be submitted no later than the payment of the issue fee.

Authorization for this examiner's amendment was given in an interview with Andrew Stark on 2/4/2022.

The application has been amended as follows:

Claim 10 now recites: A fuel selector of a dual fuel generator comprising: a selector switch having a first fuel mode and a second fuel mode; a fuel solenoid having open and closed positions; and a solenoid switch having open and closed positions to activate and deactivate the fuel solenoid; wherein, when the selector switch is in the first fuel mode, the solenoid switch and the fuel solenoid are in the closed positions and, when the selector switch is in the second fuel mode, the solenoid switch and the fuel

solenoid are in the open positions; and further comprising: a valve assembly fluidly connected to each of a first fuel source and a second fuel source, the valve assembly being operable to selectively control a first fuel flow and a second fuel flow from the first fuel source and the second fuel source, respectively, to an engine of the dual fuel generator; and wherein positioning of the selector switch in the first fuel mode and the second fuel mode enables a selection of one of the first fuel flow and the second fuel flow.

Claim 12 is now cancelled.

Claim 13 now recites: The fuel selector of claim [[12]] 10 wherein the valve assembly is positioned on or adjacent the selector switch.

Claim 14 now recites: The fuel selector of claim [[12]] 10 wherein the valve assembly comprises: two fuel inputs, with a first fuel input connected to the first fuel source and a second fuel input connected to the second fuel source; and two fuel outputs for selectively supplying fuel to the engine from the first fuel source or the second fuel source.

Claim 17 now recites: The fuel selector of claim [[12]] 10 wherein the first fuel source is a liquefied petroleum gas (LPG) fuel source and wherein the second fuel source is a gasoline source.

Claim 19 now recites: The fuel selector of claim 10 wherein positioning the selector switch in the first fuel mode enables the selection of [[a]] the first fuel source to

the generator, and positioning the selector switch in the second fuel mode enables the selection of [[a]] the second fuel source to the generator.

Allowable Subject Matter

4. Claims 1-11 and 13-19 are allowed.

5. The following is an examiner's statement of reasons for allowance: There is no prior art that teaches all the limitations of claims 1 and 10, but more specifically, a fuel selector switch for a dual fuel generator having valve assembly fluidly coupled to a first fuel source and a second fuel source, a used can manually select one of a first fuel or a second fuel depending on the position of the selector switch, the valve assembly having two fuel inputs and two fuel outputs. All depending claims are allowable.

The closest pieces of prior art are mentioned in the previous rejections.

Any comments considered necessary by applicant must be submitted no later than the payment of the issue fee and, to avoid processing delays, should preferably accompany the issue fee. Such submissions should be clearly labeled "Comments on Statement of Reasons for Allowance."

Conclusion

6. The prior art made of record and not relied upon is considered pertinent to applicant's disclosure. Refer to PTO-892.

7. Any inquiry concerning this communication or earlier communications from the examiner should be directed to SYED O HASAN whose telephone number is (571)272-0990. The examiner can normally be reached Monday-Friday; 11AM-7PM.

Examiner interviews are available via telephone, in-person, and video conferencing using a USPTO supplied web-based collaboration tool. To schedule an

interview, applicant is encouraged to use the USPTO Automated Interview Request (AIR) at http://www.uspto.gov/interviewpractice.

If attempts to reach the examiner by telephone are unsuccessful, the examiner's supervisor, Lindsay Low can be reached on (571) 272-1196. The fax phone number for the organization where this application or proceeding is assigned is 571-273-8300.

Information regarding the status of published or unpublished applications may be obtained from Patent Center. Unpublished application information in Patent Center is available to registered users. To file and manage patent submissions in Patent Center, visit: https://patentcenter.uspto.gov. Visit https://www.uspto.gov/patents/apply/patent-center for more information about Patent Center and https://www.uspto.gov/patents/docx for information about filing in DOCX format. For additional questions, contact the Electronic Business Center (EBC) at 866-217-9197 (toll-free). If you would like assistance from a USPTO Customer Service Representative, call 800-786-9199 (IN USA OR CANADA) or 571-272-1000.

/SYED O HASAN/
Primary Examiner, Art Unit 3747
2/4/2022

Applicant-Initiated Interview Summary	Application No. 16/789,722	Applicant(s) Sarder et al.		
	Examiner SYED O HASAN	Art Unit 3747	AIA (First Inventor to File) Status Yes	Page 1 of 1

All Participants (applicant, applicants representative, PTO personnel)	Title	Type
SYED O HASAN	Primary Examiner	Telephonic
Andrew Stark	Attorney	

Date of Interview: 04 February 2022

Issues Discussed:

35 U.S.C. 103

Agreement was reached as to what amendments would overcome the prior art of record. A notice of allowance will be filed along with the examiner's amendments.

/SYED O HASAN/ Primary Examiner, Art Unit 3747	

Applicant is reminded that a complete written statement as to the substance of the interview must be made of record in the application file. It is the applicants responsibility to provide the written statement, unless the interview was initiated by the Examiner and the Examiner has indicated that a written summary will be provided. See MPEP 713.04
Please further see:
MPEP 713.04
Title 37 Code of Federal Regulations (CFR) § 1.133 Interviews, paragraph (b)
37 CFR § 1.2 Business to be transacted in writing

Applicant recordation instructions: The formal written reply to the last Office action must include the substance of the interview. (See MPEP section 713.04). If a reply to the last Office action has already been filed, applicant is given a non-extendable period of the longer of one month or thirty days from this interview date, or the mailing date of this interview summary form, whichever is later, to file a statement of the substance of the interview.

Examiner recordation instructions: Examiners must summarize the substance of any interview of record. A complete and proper recordation of the substance of an interview should include the items listed in MPEP 713.04 for complete and proper recordation including the identification of the general thrust of each argument or issue discussed, a general indication of any other pertinent matters discussed regarding patentability and the general results or outcome of the interview, to include an indication as to whether or not agreement was reached on the issues raised.

Notice of References Cited	Application/Control No. 16/789,722	Applicant(s)/Patent Under Reexamination Sarder et al.	
	Examiner SYED O HASAN	Art Unit 3747	Page 1 of 1

U.S. PATENT DOCUMENTS

*		Document Number Country Code-Number-Kind Code	Date MM-YYYY	Name	CPC Classification	US Classification
*	A	US-20040246118-A1	12-2004	Tharman, Paul A.	F01M11/12	340/450
*	B	US-4489699-A	12-1984	Poehlman; Arthur G.	F02B69/04	48/180.1
*	C	US-20060169238-A1	08-2006	Mazuka; Naoto	F02B63/04	290/1A
*	D	US-20040240141-A1	12-2004	Stolt, Peter E.	H01H47/18	361/160
*	E	US-20020125115-A1	09-2002	Burkholder, Robert F.	H01R13/465	200/51.11
*	F	US-20070137591-A1	06-2007	Sugimoto; Yasuhiro	F02M21/06	123/527
*	G	US-3696333-A	10-1972	Mott; Willard	F02N11/0803	340/425.5
	H					
	I					
	J					
	K					
	L					
	M					

FOREIGN PATENT DOCUMENTS

*		Document Number Country Code-Number-Kind Code	Date MM-YYYY	Country	Name	CPC Classification
	N					
	O					
	P					
	Q					
	R					
	S					
	T					

NON-PATENT DOCUMENTS

*		Include as applicable: Author, Title Date, Publisher, Edition or Volume, Pertinent Pages)
	U	
	V	
	W	
	X	

*A copy of this reference is not being furnished with this Office action. (See MPEP § 707.05(a).)
Dates in MM-YYYY format are publication dates. Classifications may be US or foreign.

Issue Classification	Application/Control No.	Applicant(s)/Patent Under Reexamination
	16/789,722	Sarder et al.
	Examiner	**Art Unit**
	SYED O HASAN	3747

CPC						
Symbol					**Type**	**Version**
F02D	/	19	/	0676	F	2013-01-01
F02M	/	13	/	08	I	2013-01-01
F02D	/	19	/	0647	I	2013-01-01
F02D	/	29	/	06	I	2013-01-01
F02D	/	19	/	0613	I	2013-01-01
Y10T	/	137	/	0318	A	2015-04-01
Y10T	/	137	/	0491	A	2015-04-01
Y10T	/	137	/	87684	A	2015-04-01
Y02T	/	10	/	30	A	2013-01-01

CPC Combination Sets								
Symbol					**Type**	**Set**	**Ranking**	**Version**
	/		/					

NONE (Assistant Examiner) (Date)		**Total Claims Allowed:** 18	
/SYED O HASAN/ Primary Examiner, Art Unit 3747 (Primary Examiner) (Date)	04 February 2022	O.G. Print Claim(s) 1	O.G. Print Figure 1

U.S. Patent and Trademark Office Part of Paper No.: 20220204

Issue Classification	Application/Control No.	Applicant(s)/Patent Under Reexamination
	16/789,722	Sarder et al.
	Examiner	**Art Unit**
	SYED O HASAN	3747

INTERNATIONAL CLASSIFICATION				
CLAIMED				
F02D	/	19	/	06

NON-CLAIMED				
	/		/	

US ORIGINAL CLASSIFICATION	
CLASS	**SUBCLASS**

CROSS REFERENCES(S)						
CLASS	**SUBCLASS (ONE SUBCLASS PER BLOCK)**					

NONE (Assistant Examiner) (Date)		**Total Claims Allowed:** 18	
/SYED O HASAN/ Primary Examiner, Art Unit 3747 (Primary Examiner) (Date)	04 February 2022	O.G. Print Claim(s) 1	O.G. Print Figure 1

U.S. Patent and Trademark Office Part of Paper No.: 20220204

Champion - EX2109, Page 22 of 403
Generac Power Systems, Inc. et al v. Champion Power Equip., Inc.
IPR2025-01438

Issue Classification	Application/Control No.	Applicant(s)/Patent Under Reexamination
	16/789,722	Sarder et al.
	Examiner	**Art Unit**
	SYED O HASAN	3747

☐ Claims renumbered in the same order as presented by applicant ☐ CPA ☐ T.D. ☐ R.1.47

CLAIMS

Final	Original	Final	Original	Final	Original	Final	Original	Final	Original	Final	Original	Final	Original	Final	Original
1	1	10	10	18	19										
2	2	11	11												
3	3		12												
4	4	12	13												
5	5	13	14												
6	6	14	15												
7	7	15	16												
8	8	16	17												
9	9	17	18												

NONE (Assistant Examiner)	(Date)	**Total Claims Allowed:** 18	
/SYED O HASAN/ Primary Examiner, Art Unit 3747 (Primary Examiner)	04 February 2022 (Date)	O.G. Print Claim(s) 1	O.G. Print Figure 1

U.S. Patent and Trademark Office

Part of Paper No.: 20220204

Champion - EX2109, Page 23 of 403
Generac Power Systems, Inc. et al v. Champion Power Equip., Inc.
IPR2025-01438

Search Notes	Application/Control No.	Applicant(s)/Patent Under Reexamination
	16/789,722	Sarder et al.
	Examiner	**Art Unit**
	SYED O HASAN	3747

CPC - Searched*		
Symbol	**Date**	**Examiner**
F02D19/0676, 19/0613, 19/0647, 29/06, 19/0681, F02M21/0293, 21/0236, 13/08, F02B53/00, 63/00, H02K1/22	03/08/2021	/S.O.H/
Updated Search	06/17/2021	/S.O.H/
Updated Search	12/14/2021	/S.O.H/
Updated Search	02/04/2022	/S.O.H/

CPC Combination Sets - Searched*		
Symbol	**Date**	**Examiner**

US Classification - Searched*			
Class	**Subclass**	**Date**	**Examiner**

* See search history printout included with this form or the SEARCH NOTES box below to determine the scope of the search.

Search Notes		
Search Notes	**Date**	**Examiner**
Searched in subclasses above with keywords.	03/08/2021	/S.O.H/
EAST search strategy attached. Inventor name searches performed.	03/08/2021	/S.O.H/

Interference Search			
US Class/CPC Symbol	**US Subclass/CPC Group**	**Date**	**Examiner**
	(dual near3 fuel near3 (engine or generator)) same (fuel near3 (valve or supply) near3 (lever or switch or handle)).clm.	02/04/2022	/S.O.H/

	/SYED O HASAN/ Primary Examiner, Art Unit 3747

Champion - EX2109, Page 24 of 403
Generac Power Systems, Inc. et al v. Champion Power Equip., Inc.
IPR2025-01438

Search Notes	Application/Control No.	Applicant(s)/Patent Under Reexamination
	16/789,722	Sarder et al.
	Examiner	**Art Unit**
	SYED O HASAN	3747

	/SYED O HASAN/ Primary Examiner, Art Unit 3747

Champion - EX2109, Page 25 of 403
Generac Power Systems, Inc. et al v. Champion Power Equip., Inc.
IPR2025-01438

Index of Claims	Application/Control No.	Applicant(s)/Patent Under Reexamination
	16/789,722	Sarder et al.
	Examiner	**Art Unit**
	SYED O HASAN	3747

✓	Rejected	-	Cancelled	N	Non-Elected	A	Appeal
=	Allowed	÷	Restricted	I	Interference	O	Objected

CLAIMS

☐ Claims renumbered in the same order as presented by applicant ☐ CPA ☐ T.D. ☐ R.1.47

CLAIM		DATE								
Final	Original	03/08/2021	06/18/2021	12/14/2021	02/04/2022					
1	1	✓	O	=	=					
2	2	✓	O	=	=					
3	3	✓	O	=	=					
4	4	O	O	=	=					
5	5	✓	O	=	=					
6	6	✓	O	=	=					
7	7	O	O	=	=					
8	8	O	O	=	=					
9	9	✓	O	=	=					
10	10	✓	✓	✓	=					
11	11	✓	✓	✓	=					
	12	✓	O	=	-					
12	13	✓	O	=	=					
13	14	✓	O	=	=					
14	15	✓	O	=	=					
15	16	✓	O	=	=					
16	17	✓	O	=	=					
17	18			✓	=					
18	19			O	=					

Bibliographic Data

Application No: 16/789,722

Foreign Priority claimed: ○ Yes ◉ No

35 USC 119 (a-d) conditions met: ☐ Yes ☑ No ☐ Met After Allowance

Verified and Acknowledged: /SYED O HASAN/ (Examiner's Signature) [ ] (Initials)

Title: DUAL FUEL SELECTOR SWITCH

FILING or 371(c) DATE	CLASS	GROUP ART UNIT	ATTORNEY DOCKET NO.
02/13/2020	137	3747	
RULE			

APPLICANTS

Champion Power Equipment, Inc., Santa Fe Springs, CA,

INVENTORS

Mark J. Sarder, Waukesha, WI, UNITED STATES

Leigh Jenison, Hartland, WI, UNITED STATES

Ian Schmit, Cedarburg, WI, UNITED STATES

CONTINUING DATA

This application is a CON of 15015205 02/04/2016 PAT 10598101

15015205 is a CON of 14069747 11/01/2013 PAT 9435273

FOREIGN APPLICATIONS

IF REQUIRED, FOREIGN LICENSE GRANTED**

02/28/2020

**** SMALL ENTITY ****

STATE OR COUNTRY

UNITED STATES

ADDRESS

FILING FEE RECEIVED

$785

EAST Search History

EAST Search History (Prior Art)

Ref #	Hits	Search Query	DBs	Default Operator	Plurals	Time Stamp
L1	32	(generator) and (engine) and ((dual or second$4) near3 fuel) and ((fuel near3 solenoid near3 switch))	US-PGPUB; USPAT; USOCR; FPRS; EPO; JPO; DERWENT	OR	ON	2022/02/04 16:19
L4	57	dyson and (hair near3 dryer)	USPAT	OR	ON	2022/02/04 16:22
S1	11	((Mark) near2 (Sarder)).INV.	US-PGPUB; USPAT; USOCR	OR	OFF	2015/06/23 14:16
S2	2	((Leigh) near2 (Jenison)).INV.	US-PGPUB; USPAT; USOCR	OR	OFF	2015/06/23 14:17
S3	2	((Ian) near2 (Schmit)).INV.	US-PGPUB; USPAT; USOCR	OR	OFF	2015/06/23 14:18
S4	834	123/525.ccls.	US-PGPUB; USPAT; USOCR; FPRS; EPO; JPO; DERWENT	OR	OFF	2015/06/23 14:20
S5	3	123/525.ccls. and (dual near3 fuel near3 generator)	US-PGPUB; USPAT; USOCR; FPRS; EPO; JPO; DERWENT	OR	OFF	2015/06/23 14:20
S6	2	123/525.ccls. and (((multiple near3 fuel) or bi-fuel) near3 generator)	US-PGPUB; USPAT; USOCR; FPRS; EPO; JPO; DERWENT	OR	OFF	2015/06/23 14:21
S7	3	123/525.ccls. and (((multiple near3 fuel) or bi-fuel or (LPG near5 gasoline)) near10 generator)	US-PGPUB; USPAT; USOCR; FPRS; EPO; JPO; DERWENT	OR	OFF	2015/06/23 14:22

S8	236	(((multiple near3 fuel) or bi-fuel or (LPG near5 gasoline)) near10 generator)	US-PGPUB; USPAT; USOCR; FPRS; EPO; JPO; DERWENT	OR	OFF	2015/06/23 14:22
S9	10	(((multiple near3 fuel) or bi-fuel or (LPG near5 gasoline)) near10 generator) same (switch)	US-PGPUB; USPAT; USOCR; FPRS; EPO; JPO; DERWENT	OR	OFF	2015/06/23 14:23
S10	458	f02D19/0676.cpc.	US-PGPUB; USPAT; USOCR; FPRS; EPO; JPO; DERWENT	OR	OFF	2015/06/23 14:23
S11	17	F02D19/0676.cpc. and (generator)	US-PGPUB; USPAT; USOCR; FPRS; EPO; JPO; DERWENT	OR	OFF	2015/06/23 14:24
S12	6	F02M21/0293.cpc. and (generator)	US-PGPUB; USPAT; USOCR; FPRS; EPO; JPO; DERWENT	OR	OFF	2015/06/23 14:24
S13	14	F02M21/0236.cpc. and (generator)	US-PGPUB; USPAT; USOCR; FPRS; EPO; JPO; DERWENT	OR	OFF	2015/06/23 14:25
S14	18	F02M21/0233.cpc. and (generator)	US-PGPUB; USPAT; USOCR; FPRS; EPO; JPO; DERWENT	OR	OFF	2015/06/23 14:27
S15	21	F02M13/08.cpc. and (generator)	US-PGPUB; USPAT; USOCR; FPRS; EPO; JPO; DERWENT	OR	OFF	2015/06/23 14:29

S16	0	(generator) and (dual near3 fuel) and (selectro near3 switch)	US-PGPUB; USPAT; USOCR; FPRS; EPO; JPO; DERWENT	OR	OFF	2015/06/23 14:32
S17	16	(generator) and (dual near3 fuel) and (selector near3 switch)	US-PGPUB; USPAT; USOCR; FPRS; EPO; JPO; DERWENT	OR	OFF	2015/06/23 14:32
S18	42	(generator) and ((dual near3 fuel) or (bi-fuel) or (multiple near3 fuel)) and (selector near3 switch)	US-PGPUB; USPAT; USOCR; FPRS; EPO; JPO; DERWENT	OR	OFF	2015/06/23 14:33
S19	46	(generator) and ((dual near3 fuel) or (bi-fuel) or (multiple near3 fuel)) and (fuel near5 select$4 near5 switch)	US-PGPUB; USPAT; USOCR; FPRS; EPO; JPO; DERWENT	OR	OFF	2015/06/23 14:39
S20	46	(generator or genset) and ((dual near3 fuel) or (bi-fuel) or (multiple near3 fuel)) and (fuel near5 select$4 near5 switch)	US-PGPUB; USPAT; USOCR; FPRS; EPO; JPO; DERWENT	OR	OFF	2015/06/23 14:40
S21	728	137/383.ccls.	US-PGPUB; USPAT; USOCR; FPRS; EPO; JPO; DERWENT	OR	OFF	2015/06/23 14:58
S22	96	137/384.8.ccls.	US-PGPUB; USPAT; USOCR; FPRS; EPO; JPO; DERWENT	OR	OFF	2015/06/23 14:58
S23	0	317/317.5.ccls.	US-PGPUB; USPAT; USOCR; FPRS; EPO; JPO; DERWENT	OR	OFF	2015/06/23 15:04

S24	133	273/317.5.ccls.	US-PGPUB; USPAT; USOCR; FPRS; EPO; JPO; DERWENT	OR	OFF	2015/06/23 15:04
S25	161	292/4.ccls.	US-PGPUB; USPAT; USOCR; FPRS; EPO; JPO; DERWENT	OR	OFF	2015/06/23 15:06
S26	106	292/290.ccls.	US-PGPUB; USPAT; USOCR; FPRS; EPO; JPO; DERWENT	OR	OFF	2015/06/23 15:07
S27	578	49/503.ccls.	US-PGPUB; USPAT; USOCR; FPRS; EPO; JPO; DERWENT	OR	OFF	2015/06/23 15:15
S28	92	123/2-3.ccls. and (fuel near5 switch)	US-PGPUB; USPAT; USOCR; FPRS; EPO; JPO; DERWENT	OR	OFF	2015/06/23 15:16
S29	163	(generator) same (LPG near20 gasoline)	US-PGPUB; USPAT; USOCR; FPRS; EPO; JPO; DERWENT	OR	OFF	2015/06/23 15:35
S30	163	(generator) same (LPG near20 gasoline)	US-PGPUB; USPAT; USOCR; FPRS; EPO; JPO; DERWENT	OR	OFF	2015/06/23 15:35
S31	19	(fuel near3 select$4 near3 switch) and (LPG near20 gasoline)	US-PGPUB; USPAT; USOCR; FPRS; EPO; JPO; DERWENT	OR	OFF	2015/06/23 15:53

S32	321,499	(select$4 near3 switch)	US-PGPUB; USPAT; USOCR; FPRS; EPO; JPO; DERWENT	OR	OFF	2015/06/23 15:55
S33	1,395	(select$4 near3 switch) same (enclosure)	US-PGPUB; USPAT; USOCR; FPRS; EPO; JPO; DERWENT	OR	OFF	2015/06/23 15:55
S34	123	(switch) same (enclosure) same (first near3 valve) same (second near3 valve)	US-PGPUB; USPAT; USOCR; FPRS; EPO; JPO; DERWENT	OR	OFF	2015/06/23 15:56
S35	0	(switch) same (genset) same (first near3 valve) same (second near3 valve)	US-PGPUB; USPAT; USOCR; FPRS; EPO; JPO; DERWENT	OR	OFF	2015/06/23 15:58
S36	11	(genset) and ((switch) same (first near3 valve) same (second near3 valve))	US-PGPUB; USPAT; USOCR; FPRS; EPO; JPO; DERWENT	OR	OFF	2015/06/23 15:58
S37	550	(slider near3 switch).ti.	US-PGPUB; USPAT; USOCR; FPRS; EPO; JPO; DERWENT	OR	OFF	2015/06/23 16:17
S38	28	(slider near3 switch).ti.	US-PGPUB; USPAT	OR	OFF	2015/06/23 16:19
S39	2	("7135651" | "7223931").PN. OR ("7772508").URPN.	US-PGPUB; USPAT; USOCR	OR	OFF	2015/06/23 16:20
S40	209	200/241.ccls.	US-PGPUB; USPAT	OR	OFF	2015/06/23 16:23
S41	45	200/241.ccls. and (groove or slot)	US-PGPUB; USPAT	OR	OFF	2015/06/23 16:23
S42	151	290/1A.ccls. and (groove or slot)	US-PGPUB; USPAT; USOCR;	OR	OFF	2015/06/23 16:24

			FPRS; EPO; JPO; DERWENT			
S43	414	290/1A.ccls. and (switch)	US-PGPUB; USPAT; USOCR; FPRS; EPO; JPO; DERWENT	OR	OFF	2015/06/23 16:25
S44	45	290/1A.ccls. and (select$4 near3 switch)	US-PGPUB; USPAT; USOCR; FPRS; EPO; JPO; DERWENT	OR	OFF	2015/06/23 16:25
S45	16,208	(select$4 near3 switch).ti.	US-PGPUB; USPAT; USOCR; FPRS; EPO; JPO; DERWENT	OR	OFF	2015/06/23 16:30
S46	42	(fuel near3 select$4 near3 switch).ti.	US-PGPUB; USPAT; USOCR; FPRS; EPO; JPO; DERWENT	OR	OFF	2015/06/23 16:30
S47	1	("2004/0240141").URPN.	USPAT	OR	OFF	2015/06/23 16:31
S48	436	261/16.ccls.	USPAT	OR	OFF	2015/06/23 16:38
S49	18	261/16.ccls. and switch	USPAT	OR	OFF	2015/06/23 16:38
S50	0	48/180R.ccls.	USPAT	OR	OFF	2015/06/23 16:38
S51	0	48/180C.ccls.	USPAT	OR	OFF	2015/06/23 16:38
S52	0	48/180C.ccls.	US-PGPUB; USPAT; USOCR; FPRS; EPO; JPO; DERWENT	OR	OFF	2015/06/23 16:39
S53	834	123/525.ccls.	US-PGPUB; USPAT; USOCR; FPRS; EPO;	OR	OFF	2015/06/23 16:39

			JPO; DERWENT			
S54	215	123/525.ccls. and (switch)	US-PGPUB; USPAT; USOCR; FPRS; EPO; JPO; DERWENT	OR	OFF	2015/06/23 16:39
S55	76	123/525.ccls. and (switch) and (dual near3 fuel)	US-PGPUB; USPAT; USOCR; FPRS; EPO; JPO; DERWENT	OR	OFF	2015/06/23 16:39
S56	15	("20130122439" | "20130098349" | "20060169238" | "20040240141" | "4489699").PN.	US-PGPUB; USPAT; USOCR; FPRS; EPO; JPO; DERWENT	OR	OFF	2015/06/29 14:24
S57	2	(dual near3 fuel near3 engine) same (fuel near3 handle)	US-PGPUB; USPAT; USOCR	OR	OFF	2015/12/17 18:15
S58	3	(dual near3 fuel near3 engine) same (fuel near3 handle)	US-PGPUB; USPAT; USOCR; FPRS; EPO; JPO; DERWENT	OR	OFF	2015/12/17 18:16
S59	16	(dual near3 fuel near3 engine) same (fuel near3 lever)	US-PGPUB; USPAT; USOCR; FPRS; EPO; JPO; DERWENT	OR	OFF	2015/12/17 18:17
S60	5	(dual near3 fuel near3 engine) same (fuel near3 valve near3 (lever or switch or handle))	US-PGPUB; USPAT; USOCR; FPRS; EPO; JPO; DERWENT	OR	OFF	2015/12/17 18:23
S61	6	(dual near3 fuel near3 (engine or generator)) same (fuel near3 valve near3 (lever or switch or handle))	US-PGPUB; USPAT; USOCR; FPRS; EPO; JPO; DERWENT	OR	OFF	2015/12/17 18:45
S62	24	(dual near3 fuel near3 (engine or generator)) same (fuel near3 (valve or	US-PGPUB; USPAT;	OR	OFF	2015/12/17 18:45

		supply) near3 (lever or switch or handle))	USOCR; FPRS; EPO; JPO; DERWENT			
S63	4,939	(gas near3 station).ti.	US-PGPUB; USPAT; USOCR; FPRS; EPO; JPO; DERWENT	OR	OFF	2015/12/17 18:55
S64	39	(gas near3 station).ti. and lever	US-PGPUB; USPAT; USOCR; FPRS; EPO; JPO; DERWENT	OR	OFF	2015/12/17 18:55
S65	292	(generator).ti. and ((dual or multiple) near3 (fuel))	US-PGPUB; USPAT; USOCR; FPRS; EPO; JPO; DERWENT	OR	OFF	2015/12/17 18:56
S66	98	(generator).ti. and ((dual or multiple) near3 (fuel)) and (engine)	US-PGPUB; USPAT; USOCR; FPRS; EPO; JPO; DERWENT	OR	OFF	2015/12/17 18:56
S67	13	(generator).ti. and (((dual or multiple) near3 (fuel)) same (switch or handle or lever)) and (engine)	US-PGPUB; USPAT; USOCR; FPRS; EPO; JPO; DERWENT	OR	OFF	2015/12/17 18:56
S69	39	"4489699"	US-PGPUB; USPAT; USOCR	OR	OFF	2017/12/28 20:09
S70	14	F02D19/0613.cpc. and ((dual near3 fuel) same (switch))	US-PGPUB; USPAT; USOCR	OR	OFF	2018/01/02 20:38
S71	25	F02D19/0613.cpc. and ((dual near3 fuel) same (switch))	US-PGPUB; USPAT; USOCR; FPRS; EPO; JPO; DERWENT	OR	OFF	2018/01/02 20:38
S72	72	F02D19/0647.cpc. and ((dual near3 fuel) same (switch))	US-PGPUB; USPAT; USOCR;	OR	OFF	2018/01/02 20:39

			FPRS; EPO; JPO; DERWENT			
S73	77	F02D19/0647.cpc. and ((dual near3 fuel) same (switch))	US-PGPUB; USPAT; USOCR; FPRS; EPO; JPO; DERWENT	OR	ON	2018/01/02 20:39
S74	11	F02D19/06.cpc. and ((dual near3 fuel) same (switch))	US-PGPUB; USPAT; USOCR; FPRS; EPO; JPO; DERWENT	OR	ON	2018/01/02 20:40
S75	32	F02M13/08.cpc. and ((dual near3 fuel) same (switch))	US-PGPUB; USPAT; USOCR; FPRS; EPO; JPO; DERWENT	OR	ON	2018/01/02 20:41
S76	9	(fuel near3 select$4 near3 switch) same (valve near3 assembly)	US-PGPUB; USPAT; USOCR; FPRS; EPO; JPO; DERWENT	OR	OFF	2018/08/01 21:24
S77	0	(geneartor) same (fuel near3 switch) same (valve near3 assembly)	US-PGPUB; USPAT; USOCR; FPRS; EPO; JPO; DERWENT	OR	OFF	2018/08/01 21:25
S78	9	(generator) same (fuel near3 switch) same (valve near3 assembly)	US-PGPUB; USPAT; USOCR; FPRS; EPO; JPO; DERWENT	OR	OFF	2018/08/01 21:25
S79	6,704	(generator) same (fuel near3 valve)	US-PGPUB; USPAT; USOCR; FPRS; EPO; JPO; DERWENT	OR	OFF	2018/08/01 21:26
S80	10	(generator) same (dual near2 fuel near3 valve)	US-PGPUB; USPAT; USOCR; FPRS; EPO;	OR	OFF	2018/08/01 21:26

			JPO; DERWENT			
S81	13	(generator) same (dual near2 fuel near3 switch)	US-PGPUB; USPAT; USOCR; FPRS; EPO; JPO; DERWENT	OR	OFF	2018/08/01 21:27
S82	13	(generator) same (dual near3 fuel near3 switch)	US-PGPUB; USPAT; USOCR; FPRS; EPO; JPO; DERWENT	OR	OFF	2018/08/01 21:28
S83	19	(gaseous near3 fuel) same (dual near3 fuel near3 switch)	US-PGPUB; USPAT; USOCR; FPRS; EPO; JPO; DERWENT	OR	OFF	2018/08/01 21:54
S84	52	(gaseous near3 fuel) same (fuel near3 select$4 near3 switch)	US-PGPUB; USPAT; USOCR; FPRS; EPO; JPO; DERWENT	OR	OFF	2018/08/01 21:56
S85	85	F02D19/0613.cpc. and (switch same valve)	US-PGPUB; USPAT; USOCR; FPRS; EPO; JPO; DERWENT	OR	OFF	2018/08/01 22:03
S86	31	F02D19/0613.cpc. and (switch same valve same (user or operator))	US-PGPUB; USPAT; USOCR; FPRS; EPO; JPO; DERWENT	OR	OFF	2018/08/01 22:04
S87	25	F02D19/081.cpc. and (switch same valve same (user or operator))	US-PGPUB; USPAT; USOCR; FPRS; EPO; JPO; DERWENT	OR	OFF	2018/08/01 22:08
S88	16	F02D19/0642.cpc. and (switch same valve same (user or operator))	US-PGPUB; USPAT; USOCR; FPRS; EPO;	OR	OFF	2018/08/01 22:10

			JPO; DERWENT			
S89	39	"4489699"	USPAT	OR	OFF	2018/08/02 14:52
S90	1	"20040240141"	USPAT	OR	OFF	2018/08/02 14:53
S91	3	"20040240141"	US-PGPUB; USPAT; USOCR; FPRS; EPO; JPO; DERWENT	OR	OFF	2018/08/02 14:53
S92	3	"20060169238"	US-PGPUB; USPAT; USOCR; FPRS; EPO; JPO; DERWENT	OR	OFF	2018/08/02 14:53
S93	4	"20130098349"	US-PGPUB; USPAT; USOCR; FPRS; EPO; JPO; DERWENT	OR	OFF	2018/08/02 14:55
S94	5	"20130122439"	US-PGPUB; USPAT; USOCR; FPRS; EPO; JPO; DERWENT	OR	OFF	2018/08/02 14:58
S95	1	"20060169238"	USPAT	OR	OFF	2018/08/02 14:58
S96	0	123/198E.ccls. and (duel near3 fuel)	USPAT	OR	OFF	2018/08/02 15:01
S97	1	123/198E.ccls. and (dual near3 fuel)	USPAT	OR	OFF	2018/08/02 15:01
S98	1	123/198E.ccls. and (dual near3 fuel)	US-PGPUB; USPAT; USOCR; FPRS; EPO; JPO; DERWENT	OR	OFF	2018/08/02 15:02
S99	10	123/2.ccls. and (dual near3 fuel)	US-PGPUB; USPAT; USOCR; FPRS; EPO; JPO; DERWENT	OR	OFF	2018/08/02 16:27

S100	0	60/39.463. and (dual near3 fuel)	US-PGPUB; USPAT; USOCR; FPRS; EPO; JPO; DERWENT	OR	OFF	2018/08/02 16:31
S101	121	60/39.463.ccls. and (dual near3 fuel)	US-PGPUB; USPAT; USOCR; FPRS; EPO; JPO; DERWENT	OR	OFF	2018/08/02 16:31
S102	34	60/39.463.ccls. and ((dual near3 fuel) same (valve))	US-PGPUB; USPAT; USOCR; FPRS; EPO; JPO; DERWENT	OR	OFF	2018/08/02 16:32
S103	50	"4489699"	US-PGPUB; USPAT; USOCR; FPRS; EPO; JPO; DERWENT	OR	OFF	2018/08/02 17:42
S104	5	generator and (((dual or multiple or second$4) near3 (fuel)) same (valve near2 handle) same (user or operator or manual or manually))	US-PGPUB; USPAT; USOCR; FPRS; EPO; JPO; DERWENT	OR	ON	2019/06/16 23:09
S105	16	generator and (((dual or multiple or second$4) near3 (fuel)) same (valve near2 handle))	US-PGPUB; USPAT; USOCR; FPRS; EPO; JPO; DERWENT	OR	ON	2019/06/16 23:10
S106	20	generator and (((dual or multiple or second$4) near3 (fuel)) same (valve near3 handle))	US-PGPUB; USPAT; USOCR; FPRS; EPO; JPO; DERWENT	OR	ON	2019/06/16 23:10
S107	540	generator and (((dual or multiple or second$4) near3 (fuel)) same (valve) same (user or operator or manual or manually))	US-PGPUB; USPAT; USOCR; FPRS; EPO; JPO; DERWENT	OR	ON	2019/06/16 23:12

S108	124	generator and (((dual or multiple or second$4) near3 (fuel)) same (valve) same (user or operator or manual or manually) same switch)	US-PGPUB; USPAT; USOCR; FPRS; EPO; JPO; DERWENT	OR	ON	2019/06/16 23:13
S109	4	("2681694").URPN.	USPAT	OR	OFF	2019/06/16 23:23
S110	37	F02D19/0676.cpc. and ((valve) same (user or operator or manual or manually) same switch)	US-PGPUB; USPAT; USOCR; FPRS; EPO; JPO; DERWENT	OR	ON	2019/06/17 17:17
S111	19	F02D19/0681.cpc. and ((valve) same (user or operator or manual or manually) same switch)	US-PGPUB; USPAT; USOCR; FPRS; EPO; JPO; DERWENT	OR	ON	2019/06/17 17:21
S112	3	("2008/0022983").URPN.	USPAT	OR	OFF	2019/06/17 17:25
S113	0	F02B2063/046.cpc. and ((valve) same (user or operator or manual or manually) same switch)	US-PGPUB; USPAT; USOCR; FPRS; EPO; JPO; DERWENT	OR	ON	2019/06/17 17:29
S114	23	F02B2063/046.cpc. and ((valve) same (user or operator or manual or manually))	US-PGPUB; USPAT; USOCR; FPRS; EPO; JPO; DERWENT	OR	ON	2019/06/17 17:29
S115	23	F02B2063/046.cpc. and ((valve) same (user or operator or manual or manually or mechanically or mechanical))	US-PGPUB; USPAT; USOCR; FPRS; EPO; JPO; DERWENT	OR	ON	2019/06/17 17:54
S116	33	F02B63/048.cpc. and ((valve) same (user or operator or manual or manually or mechanically or mechanical))	US-PGPUB; USPAT; USOCR; FPRS; EPO; JPO; DERWENT	OR	ON	2019/06/17 17:54
S117	1,201	(((dual or multiple or second$4 or bi) near3 (fuel)) same generator) and ((valve) same (user or operator or	US-PGPUB; USPAT; USOCR;	OR	ON	2019/06/17 18:00

		manual or manually or mechanically or mechanical))	FPRS; EPO; JPO; DERWENT			
S118	72	(((dual or multiple or second$4 or bi) near3 (fuel)) same generator) and ((valve) same (user or operator or manual or manually or mechanically or mechanical) same handle)	US-PGPUB; USPAT; USOCR; FPRS; EPO; JPO; DERWENT	OR	ON	2019/06/17 18:01
S119	14	(((dual or multiple or second$4 or bi) near3 (fuel)) same generator).ti. and ((valve) same (user or operator or manual or manually or mechanically or mechanical))	US-PGPUB; USPAT; USOCR; FPRS; EPO; JPO; DERWENT	OR	ON	2019/06/17 18:05
S120	5	(((dual or multiple or second$4 or bi) near3 (fuel)) same generator).ti. and ((valve) same handle)	US-PGPUB; USPAT; USOCR; FPRS; EPO; JPO; DERWENT	OR	ON	2019/06/17 18:12
S121	139	(((dual or multiple or second$4 or bi) near3 (fuel)) same generator) and ((valve) same handle)	US-PGPUB; USPAT; USOCR; FPRS; EPO; JPO; DERWENT	OR	ON	2019/06/17 18:12
S122	34	(((dual or multiple or second$4 or bi) near3 (fuel)) same generator) and ((valve) near3 handle)	US-PGPUB; USPAT; USOCR; FPRS; EPO; JPO; DERWENT	OR	ON	2019/06/17 18:12
S123	555	generator and (((dual or multiple or second$4 or bi) near3 (fuel)) same (valve) same (user or operator or manual or manually))	US-PGPUB; USPAT; USOCR; FPRS; EPO; JPO; DERWENT	OR	ON	2019/06/17 18:23
S124	310	(((dual or multiple or second$4 or bi) near3 (fuel)) same generator) and ((valve) near3 (switch or lever or selector))	US-PGPUB; USPAT; USOCR; FPRS; EPO; JPO; DERWENT	OR	ON	2019/06/17 18:23
S125	275	(generator same (case or casing or housing or enclosure)) and (((dual or multiple or second$4 or bi) near3	US-PGPUB; USPAT; USOCR; FPRS; EPO;	OR	ON	2019/06/17 18:36

		(fuel))) and ((valve) same (fuel near3 (switch or lever or selector or handle)))	JPO; DERWENT			
S126	9	("2007/0137591").URPN.	USPAT	OR	OFF	2019/06/17 18:40
S127	725,165	(generator).ti. engine and (((dual or multiple or second$4 or bi) near3 (fuel))) and ((valve) same (fuel near3 (switch or lever or selector or handle)))	US-PGPUB; USPAT; USOCR; FPRS; EPO; JPO; DERWENT	OR	ON	2019/06/17 18:48
S128	23	(generator).ti. and engine and (((dual or multiple or second$4 or bi) near3 (fuel))) and ((valve) same (fuel near3 (switch or lever or selector or handle)))	US-PGPUB; USPAT; USOCR; FPRS; EPO; JPO; DERWENT	OR	ON	2019/06/17 18:49
S129	47	(generator).ti. and engine and (((dual or multiple or second$4 or bi) near3 (fuel))) and ((fuel near3 (switch or lever or selector or handle)))	US-PGPUB; USPAT; USOCR; FPRS; EPO; JPO; DERWENT	OR	ON	2019/06/17 18:49
S130	0	(((dual or multiple or second$4 or bi) near3 (fuel) near3 gnerator)) and (second$4 near3 (fuel near3 (switch or lever or selector or handle)))	US-PGPUB; USPAT; USOCR; FPRS; EPO; JPO; DERWENT	OR	ON	2019/06/17 18:56
S131	18	(((dual or multiple or second$4 or bi) near3 (fuel) near3 generator)) and (second$4 near3 (fuel near3 (switch or lever or selector or handle)))	US-PGPUB; USPAT; USOCR; FPRS; EPO; JPO; DERWENT	OR	ON	2019/06/17 18:57
S132	34	(((dual or multiple or second$4 or bi) near3 (fuel) near3 generator)) and ((user or manual or manually or operator or mechanically) same (fuel near3 (switch or lever or selector or handle)))	US-PGPUB; USPAT; USOCR; FPRS; EPO; JPO; DERWENT	OR	ON	2019/06/17 19:00
S133	393	(generator or genset) and (((dual or multiple or second$4 or bi) near3 (fuel))) and ((user or manual or manually or operator or mechanically) same (fuel near3 (switch or lever or selector or handle)))	US-PGPUB; USPAT; USOCR; FPRS; EPO; JPO; DERWENT	OR	ON	2019/06/17 19:03
S134	433	123/525.ccls.	USPAT	OR	OFF	2019/06/17 19:31

S135	186	123/525.ccls. and (fuel same valve same (handle or switch or lever or selector))	US-PGPUB; USPAT; USOCR; FPRS; EPO; JPO; DERWENT	OR	OFF	2019/06/17 19:31
S136	22	123/525.ccls. and (generator or genset) and (fuel same valve same (handle or switch or lever or selector))	US-PGPUB; USPAT; USOCR; FPRS; EPO; JPO; DERWENT	OR	OFF	2019/06/17 19:32
S137	5	"20070137591"	US-PGPUB; USPAT; USOCR; FPRS; EPO; JPO; DERWENT	OR	OFF	2019/06/17 19:37
S138	1	"20070137591"	USPAT	OR	OFF	2019/09/25 13:50
S139	2	"20070137591"	US-PGPUB; USPAT	OR	OFF	2019/09/25 13:50
S140	46	"4489699"	US-PGPUB; USPAT	OR	OFF	2019/09/25 13:50
S141	63	("20020134362" | "20040139943" | "20100258099" | "20110168133" | "20110253102" | "20130047964" | "20130220274" | "20140202430" | "20140238340" | "20140373531" | "20150122230" | "2722208" | "3384059" | "3412258" | "3659574" | "3718000" | "3783849" | "3888223" | "4335697" | "4372276" | "4373493" | "4393848" | "4450821" | "4463735" | "4480595" | "4502453" | "4619240" | "4628871" | "4708094" | "4895124" | "4979480" | "5092305" | "5161496" | "5171487" | "5228423" | "5287839" | "5320078" | "5325835" | "5379740" | "5419291" | "5438968" | "5450832" | "5611312" | "5673670" | "5809979" | "5816224" | "6082323" | "6213083" | "6223730" | "6276345" | "6401685" | "6453877" | "6591817" | "6914342" | "7905469" | "8342158" | "8590510" | "9435273" | "20040240141" | "20060169238" | "20130098349" | "20130122439" | "4489699").PN.	US-PGPUB; USPAT	OR	OFF	2019/12/19 20:00
S143	1	"10598101"	USPAT	OR	OFF	2021/02/23 08:07

S144	1	"20070137591"	USPAT	OR	OFF	2021/03/08 19:48
S145	2	"20070137591"	US-PGPUB; USPAT	OR	OFF	2021/03/08 19:48
S146	5	"10598101"	US-PGPUB; USPAT	OR	OFF	2021/03/08 20:36
S147	49	"4489699"	US-PGPUB; USPAT	OR	OFF	2021/03/08 21:16
S148	0	carburettor near3 solenoid near3 switch	US-PGPUB; USPAT	OR	OFF	2021/03/08 21:21
S149	0	carburettor near3 solenoid near3 switch	US-PGPUB; USPAT; USOCR; FPRS; EPO; JPO	OR	OFF	2021/03/08 21:22
S150	43	carbur$8 near3 solenoid near3 switch	US-PGPUB; USPAT; USOCR; FPRS; EPO; JPO	OR	OFF	2021/03/08 21:22
S151	38	engine and (carbur$8 near3 solenoid near3 switch)	US-PGPUB; USPAT; USOCR; FPRS; EPO; JPO	OR	OFF	2021/03/08 21:22
S152	0	engine and geneartor and (carbur$8 near3 solenoid near3 switch)	US-PGPUB; USPAT; USOCR; FPRS; EPO; JPO	OR	OFF	2021/03/08 21:22
S153	26	engine and generator and (carbur$8 near3 solenoid near3 switch)	US-PGPUB; USPAT; USOCR; FPRS; EPO; JPO	OR	OFF	2021/03/08 21:22
S154	19	("20070137591" | "2398437" | "3911956" | "4323046" | "4375795" | "4471805" | "4492207" | "4750514" | "4788960" | "5934320" | "6543395" | "6591817" | "7591257" | "7802562" | "7905469" | "8042569" | "8757139" | "8944027" | "9175601").PN.	US-PGPUB; USPAT	OR	OFF	2021/03/08 22:09
S155	10	(generator) and (engine) and ((fuel near3 selector) same (second$4 near3 (outlet or output)))	US-PGPUB; USPAT; USOCR; FPRS; EPO; JPO; DERWENT	OR	ON	2021/06/15 12:17

S156	6,020	(generator) and (engine) and ((dual enar3 fuel) same (second$4 near3 (outlet or output)))	US-PGPUB; USPAT; USOCR; FPRS; EPO; JPO; DERWENT	OR	ON	2021/06/15 12:19
S157	31	(generator) and (engine) and ((dual near3 fuel) same (second$4 near3 (outlet or output)))	US-PGPUB; USPAT; USOCR; FPRS; EPO; JPO; DERWENT	OR	ON	2021/06/15 12:19
S158	5	(generator) and (engine) and ((dual or second$4) near3 fuel) and ((solenoid near3 switch) same (fuel adj solenoid))	US-PGPUB; USPAT; USOCR; FPRS; EPO; JPO; DERWENT	OR	ON	2021/06/15 13:33
S159	27	(generator) and (engine) and ((dual or second$4) near3 fuel) and (fuel near3 solenoid near3 switch)	US-PGPUB; USPAT; USOCR; FPRS; EPO; JPO; DERWENT	OR	ON	2021/06/15 13:37
S160	21	(generator) and (engine) and ((dual or second$4) near3 fuel) and (fuel near3 (cut or cut-off) near3 switch)	US-PGPUB; USPAT; USOCR; FPRS; EPO; JPO; DERWENT	OR	ON	2021/06/15 14:08
S161	958	(generator) and (engine) and ((dual or second$4) near3 fuel) and (fuel near3 switch)	US-PGPUB; USPAT; USOCR; FPRS; EPO; JPO; DERWENT	OR	ON	2021/06/15 14:09
S162	348	(generator) and (engine) and (((dual or second$4) near3 fuel) same (fuel near3 switch))	US-PGPUB; USPAT; USOCR; FPRS; EPO; JPO; DERWENT	OR	ON	2021/06/15 14:10
S163	83	(engine) and (((dual or second$4) near3 fuel) same (selector near3 switch) same (fuel near3 switch))	US-PGPUB; USPAT; USOCR; FPRS; EPO; JPO; DERWENT	OR	ON	2021/06/15 14:13

S164	1,492	(engine) and (((dual or second$4) near3 fuel) same (fuel near3 switch))	US-PGPUB; USPAT; USOCR; FPRS; EPO; JPO; DERWENT	OR	ON	2021/06/15 14:41
S165	0	gneerator and (engine) and (((dual or second$4) near3 fuel) same (fuel near3 switch))	US-PGPUB; USPAT; USOCR; FPRS; EPO; JPO; DERWENT	OR	ON	2021/06/15 14:41
S166	348	generator and (engine) and (((dual or second$4) near3 fuel) same (fuel near3 switch))	US-PGPUB; USPAT; USOCR; FPRS; EPO; JPO; DERWENT	OR	ON	2021/06/15 14:41
S167	14	("2006/0065216").URPN.	USPAT	OR	OFF	2021/06/15 14:59
S168	100	engine and ((fuel near3 selector) same (fuel near3 switch))	USPAT	OR	OFF	2021/06/15 17:11
S169	2	engine and ((fuel near3 selector) same (kill near3 switch))	USPAT	OR	OFF	2021/06/15 17:11
S170	4	engine and ((fuel near3 selector) same (kill near3 switch))	US-PGPUB; USPAT; USOCR; FPRS; EPO; JPO; DERWENT	OR	OFF	2021/06/15 17:11
S171	0	engine and ((dual near3 duel) same (kill near3 switch))	US-PGPUB; USPAT; USOCR; FPRS; EPO; JPO; DERWENT	OR	OFF	2021/06/15 17:12
S172	0	engine and ((dual near3 fuel) same (kill near3 switch))	US-PGPUB; USPAT; USOCR; FPRS; EPO; JPO; DERWENT	OR	OFF	2021/06/15 17:12
S173	5	engine and ((dual near3 fuel) same ((cut or cut-off) near3 switch))	US-PGPUB; USPAT; USOCR; FPRS; EPO; JPO; DERWENT	OR	OFF	2021/06/15 17:12

S174	7	("20070215223" | "4287908" | "4364370" | "4416244" | "5555873" | "7954479" | "9523497").PN.	US-PGPUB; USPAT	OR	OFF	2021/06/15 17:17
S175	10	"4306579"	US-PGPUB; USPAT	OR	OFF	2021/06/15 17:27
S176	8,655	generator and (solenoid near3 switch)	US-PGPUB; USPAT; USOCR; FPRS; EPO; JPO; DERWENT	OR	ON	2021/06/17 16:52
S177	1,022	generator and ((solenoid near3 switch) near5 (closed))	US-PGPUB; USPAT; USOCR; FPRS; EPO; JPO; DERWENT	OR	ON	2021/06/17 16:53
S178	238	generator and ((solenoid near3 switch) near5 (closed) near5 open)	US-PGPUB; USPAT; USOCR; FPRS; EPO; JPO; DERWENT	OR	ON	2021/06/17 16:53
S179	9	generator and ((solenoid near3 switch) near5 (closed) near5 (fuel))	US-PGPUB; USPAT; USOCR; FPRS; EPO; JPO; DERWENT	OR	ON	2021/06/17 16:54
S180	2	generator and ((solenoid near3 switch) same (fuel near3 mode))	US-PGPUB; USPAT; USOCR; FPRS; EPO; JPO; DERWENT	OR	ON	2021/06/17 17:09
S181	721	generator and ((solenoid near3 switch) same (fuel))	US-PGPUB; USPAT; USOCR; FPRS; EPO; JPO; DERWENT	OR	ON	2021/06/17 17:09
S182	132	generator and ((solenoid near3 switch) same (fuel near3 solenoid))	US-PGPUB; USPAT; USOCR; FPRS; EPO; JPO; DERWENT	OR	ON	2021/06/17 17:10

S183	58	generator and ((solenoid near3 switch) same (fuel near3 solenoid) same closed)	US-PGPUB; USPAT; USOCR; FPRS; EPO; JPO; DERWENT	OR	ON	2021/06/17 17:23
S184	2	engine and ((solenoid near3 switch) same (fuel near3 solenoid) same closed same (first near3 mode))	US-PGPUB; USPAT; USOCR; FPRS; EPO; JPO; DERWENT	OR	ON	2021/06/17 17:27
S185	2	engine and (((fuel near3 solenoid near3 switch) near5 closed) same (first near3 mode))	US-PGPUB; USPAT; USOCR; FPRS; EPO; JPO; DERWENT	OR	ON	2021/06/17 17:28
S186	2	engine and (((fuel near3 solenoid near3 switch) near5 closed) same (selector near3 switch))	US-PGPUB; USPAT; USOCR; FPRS; EPO; JPO; DERWENT	OR	ON	2021/06/17 17:29
S187	2	engine and (((fuel near3 solenoid near3 switch) near5 closed) same (mode))	US-PGPUB; USPAT; USOCR; FPRS; EPO; JPO; DERWENT	OR	ON	2021/06/17 17:29
S188	24	engine and (((fuel near3 solenoid near3 switch) near5 closed))	US-PGPUB; USPAT; USOCR; FPRS; EPO; JPO; DERWENT	OR	ON	2021/06/17 17:29
S189	9	engine and (((solenoid near3 switch) near5 closed) same (fuel near3 solenoid) same (operator or manual))	US-PGPUB; USPAT; USOCR; FPRS; EPO; JPO; DERWENT	OR	ON	2021/06/17 18:16
S190	9	engine and (((solenoid near3 switch) near5 closed) same (fuel near3 solenoid) same (operator or manual or user))	US-PGPUB; USPAT; USOCR; FPRS; EPO; JPO; DERWENT	OR	ON	2021/06/17 18:16

S191	9	engine and (((solenoid near3 switch) near5 closed) same (fuel near3 solenoid) same (operator or manual or user))	US-PGPUB; USPAT; USOCR; FPRS; EPO; JPO; DERWENT	OR	ON	2021/06/17 18:23
S192	147	(engine or generator) and ((solenoid near3 switch) same ((second$4 or dual) near3 fuel))	US-PGPUB; USPAT; USOCR; FPRS; EPO; JPO; DERWENT	OR	ON	2021/06/17 18:26
S193	23	(engine or generator) and ((solenoid adj switch) same ((second$4 or dual) near3 fuel))	US-PGPUB; USPAT; USOCR; FPRS; EPO; JPO; DERWENT	OR	ON	2021/06/17 18:27
S194	26	(engine or generator) and ((fuel near3 solenoid near3 switch) same ((second$4 or dual) near3 fuel))	US-PGPUB; USPAT; USOCR; FPRS; EPO; JPO; DERWENT	OR	ON	2021/06/17 18:33
S195	0	((fuel near3 solenoid near3 switch) same operator same ((second$4 or dual) near3 fuel))	US-PGPUB; USPAT; USOCR; FPRS; EPO; JPO; DERWENT	OR	ON	2021/06/17 18:36
S196	0	((fuel near3 solenoid near3 switch) same user same ((second$4 or dual) near3 fuel))	US-PGPUB; USPAT; USOCR; FPRS; EPO; JPO; DERWENT	OR	ON	2021/06/17 18:37
S197	48	(engine or generator) and ((fuel near3 (cut$4 or cut-off or stop) near3 switch) same ((second$4 or dual) near3 fuel))	US-PGPUB; USPAT; USOCR; FPRS; EPO; JPO; DERWENT	OR	ON	2021/06/17 18:37
S198	612	generator and ((fuel near3 solenoid) same (switch))	US-PGPUB; USPAT; USOCR; FPRS; EPO; JPO; DERWENT	OR	ON	2021/12/14 14:44

S199	164	generator and ((fuel near3 solenoid) near5 (switch))	US-PGPUB; USPAT; USOCR; FPRS; EPO; JPO; DERWENT	OR	ON	2021/12/14 14:44
S200	31	generator and ((fuel adj solenoid) near5 (switch))	US-PGPUB; USPAT; USOCR; FPRS; EPO; JPO; DERWENT	OR	ON	2021/12/14 14:44

EAST Search History (Interference)

Ref #	Hits	Search Query	DBs	Default Operator	Plurals	Time Stamp
L2	3	(dual near3 fuel near3 (engine or generator)) same (fuel near3 (valve or supply) near3 (lever or switch or handle)).clm.	USPAT	OR	ON	2022/02/04 16:20
L3	57	dyson and (hair near3 dryer)	USPAT	OR	ON	2022/02/04 16:22
S68	0	(dual near3 fuel near3 (engine or generator)) same (fuel near3 (valve or supply) near3 (lever or switch or handle)).clm.	USPAT	OR	OFF	2016/04/21 19:37
S142	2	(dual near3 fuel near3 (engine or generator)) same (fuel near3 (valve or supply) near3 (lever or switch or handle)).clm.	USPAT	OR	ON	2019/12/19 19:59

2/4/2022 4:40:10 PM
C:\Users\shasan2\Documents\EAST\Custom Office Templates\EAST\Workspaces\Dual Fuel Selector Switch 14069747.wsp

UNITED STATES PATENT AND TRADEMARK OFFICE
COMMISSIONER FOR PATENTS
P.O.BOX 1450
ALEXANDRIA VA 22313-1451

PRESORTED
FIRST-CLASS MAIL
U.S. POSTAGE PAID
POSTEDIGITAL
NNNNN

ZIOLKOWSKI PATENT SOLUTIONS GROUP, SC (ZPS)
136 S WISCONSIN ST
PORT WASHINGTON, WI 53074

Courtesy Reminder for
Application Serial No: 16/789,722

Attorney Docket No: CET1090.075
Customer Number: 26629
Date of Electronic Notification: 12/17/2021

This is a courtesy reminder that new correspondence is available for this application. If you have not done so already, please review the correspondence. The official date of notification of the outgoing correspondence will be indicated on the form PTOL-90 accompanying the correspondence.

An email notification regarding the correspondence was sent to the following email address(es) associated with your customer number:
jmf@zpspatents.com
lje@zpspatents.com
info@zpspatents.com

To view your correspondence online or update your email addresses, please visit us anytime at **https://ppair-my.uspto.gov/pair/PrivatePair.**
If you have any questions, please email the Electronic Business Center (EBC) at EBC@uspto.gov or call 1-866-217-9197.

UNITED STATES PATENT AND TRADEMARK OFFICE

UNITED STATES DEPARTMENT OF COMMERCE
United States Patent and Trademark Office
Address: COMMISSIONER FOR PATENTS
P.O. Box 1450
Alexandria, Virginia 22313-1450
www.uspto.gov

APPLICATION NO.	FILING DATE	FIRST NAMED INVENTOR	ATTORNEY DOCKET NO.	CONFIRMATION NO.
16/789,722	02/13/2020	Mark J. Sarder	CET1090.075	9989

26629 7590 12/17/2021
ZIOLKOWSKI PATENT SOLUTIONS GROUP, SC (ZPS)
136 S WISCONSIN ST
PORT WASHINGTON, WI 53074

EXAMINER
HASAN, SYED O

ART UNIT	PAPER NUMBER
3747	

NOTIFICATION DATE	DELIVERY MODE
12/17/2021	ELECTRONIC

Please find below and/or attached an Office communication concerning this application or proceeding.

The time period for reply, if any, is set in the attached communication.

Notice of the Office communication was sent electronically on above-indicated "Notification Date" to the following e-mail address(es):

info@zpspatents.com
jmf@zpspatents.com
lje@zpspatents.com

Office Action Summary	Application No. 16/789,722	Applicant(s) Sarder et al.	
	Examiner SYED O HASAN	Art Unit 3747	AIA (FITF) Status Yes

-- The MAILING DATE of this communication appears on the cover sheet with the correspondence address --

Period for Reply

A SHORTENED STATUTORY PERIOD FOR REPLY IS SET TO EXPIRE 3 MONTHS FROM THE MAILING DATE OF THIS COMMUNICATION.

- Extensions of time may be available under the provisions of 37 CFR 1.136(a). In no event, however, may a reply be timely filed after SIX (6) MONTHS from the mailing date of this communication.
- If NO period for reply is specified above, the maximum statutory period will apply and will expire SIX (6) MONTHS from the mailing date of this communication.
- Failure to reply within the set or extended period for reply will, by statute, cause the application to become ABANDONED (35 U.S.C. § 133). Any reply received by the Office later than three months after the mailing date of this communication, even if timely filed, may reduce any earned patent term adjustment. See 37 CFR 1.704(b).

Status

1)☑ Responsive to communication(s) filed on 9/24/2021.

☐ A declaration(s)/affidavit(s) under **37 CFR 1.130(b)** was/were filed on _____.

2a)☑ This action is **FINAL.** 2b) ☐ This action is non-final.

3)☐ An election was made by the applicant in response to a restriction requirement set forth during the interview on _____; the restriction requirement and election have been incorporated into this action.

4)☐ Since this application is in condition for allowance except for formal matters, prosecution as to the merits is closed in accordance with the practice under *Ex parte Quayle*, 1935 C.D. 11, 453 O.G. 213.

Disposition of Claims*

5) ☑ Claim(s) 1-19 is/are pending in the application.

5a) Of the above claim(s) _____ is/are withdrawn from consideration.

6) ☑ Claim(s) 1-9 and 12-17 is/are allowed.

7) ☑ Claim(s) 10-11 and 18 is/are rejected.

8) ☑ Claim(s) 19 is/are objected to.

9) ☐ Claim(s) _____ are subject to restriction and/or election requirement

* If any claims have been determined allowable, you may be eligible to benefit from the **Patent Prosecution Highway** program at a participating intellectual property office for the corresponding application. For more information, please see http://www.uspto.gov/patents/init_events/pph/index.jsp or send an inquiry to **PPHfeedback@uspto.gov.**

Application Papers

10)☐ The specification is objected to by the Examiner.

11)☑ The drawing(s) filed on 12/13/2020 is/are: a)☑ accepted or b)☐ objected to by the Examiner.

Applicant may not request that any objection to the drawing(s) be held in abeyance. See 37 CFR 1.85(a).

Replacement drawing sheet(s) including the correction is required if the drawing(s) is objected to. See 37 CFR 1.121(d).

Priority under 35 U.S.C. § 119

12)☐ Acknowledgment is made of a claim for foreign priority under 35 U.S.C. § 119(a)-(d) or (f).

Certified copies:

a)☐ All b)☐ Some** c)☐ None of the:

1.☐ Certified copies of the priority documents have been received.

2.☐ Certified copies of the priority documents have been received in Application No. _____.

3.☐ Copies of the certified copies of the priority documents have been received in this National Stage application from the International Bureau (PCT Rule 17.2(a)).

** See the attached detailed Office action for a list of the certified copies not received.

Attachment(s)

1) ☑ Notice of References Cited (PTO-892)

2) ☐ Information Disclosure Statement(s) (PTO/SB/08a and/or PTO/SB/08b) Paper No(s)/Mail Date _____.

3) ☐ Interview Summary (PTO-413) Paper No(s)/Mail Date _____.

4) ☐ Other: _____.

DETAILED ACTION

1. This action is in response to applicant's amendment received on 9/24/2021. Amended claims 10 and new claims 18-19 are acknowledged and the following new grounds of rejection below are formulated.

Notice of Pre-AIA or AIA Status

2. The present application, filed on or after March 16, 2013, is being examined under the first inventor to file provisions of the AIA.

Terminal Disclaimer

3. The terminal disclaimer filed on 9/24/2021 disclaiming the terminal portion of any patent granted on this application which would extend beyond the expiration date of **Patent 10,598,101** has been reviewed and is accepted. The terminal disclaimer has been recorded.

Claim Rejections - 35 USC § 103

4. In the event the determination of the status of the application as subject to AIA 35 U.S.C. 102 and 103 (or as subject to pre-AIA 35 U.S.C. 102 and 103) is incorrect, any correction of the statutory basis for the rejection will not be considered a new ground of rejection if the prior art relied upon, and the rationale supporting the rejection, would be the same under either status.

5. The following is a quotation of 35 U.S.C. 103 which forms the basis for all obviousness rejections set forth in this Office action:

> A patent for a claimed invention may not be obtained, notwithstanding that the claimed invention is not identically disclosed as set forth in section 102, if the differences between the claimed invention and the prior art are such that the claimed invention as a whole would have been obvious before the effective filing date of the claimed invention to a person having ordinary skill in the art to which the claimed invention pertains. Patentability shall not be negated by the manner in which the invention was made.

6. Claims 10, 11, and 18 is/are rejected under 35 U.S.C. 103 as being unpatentable over Sugimoto (U.S. Publication 2007/0137591), hereinafter "Sugimoto" in view of Tharman et al. (U.S. Publication 2004/0246118), hereinafter "Tharman".

Regarding claim 10, Sugimoto discloses the same invention substantially as claimed such as a fuel selector of a dual fuel generator comprising: a selector switch (12) having a first fuel mode (cutoff mode shown in figure 7) and a second fuel mode (first position fuel bottle mode shown in figure 7); a solenoid switch (kill switch 74) having open and closed positions; and a fuel solenoid having open and closed positions (kill switch associated with fuel so 74 controls a fuel solenoid); wherein, when the selector switch (12) is in the first fuel mode (cutoff position shown in figure 7), the solenoid switch and the fuel solenoid are in the closed positions (shown in figure 7 that kill switch is closed) and, when the selector switch is in the second fuel mode (first position shown in figure 7), the solenoid switch (74) and the fuel solenoid are in the open positions (shown in figure 7), but does not disclose a solenoid switch activating and deactivating the fuel solenoid. However, Tharman teaches the use of a key switch (53) that activates and deactivates the fuel solenoid (paragraph 27) for the purpose of allowing fuel flow into the combustion chamber during engine operation and cutting off fuel flow into combustion chamber when the key is switched off (paragraph 27). Therefore, it would have been obvious to one of ordinary skill in the art before the effective filing date of the invention to modify Sugimoto by incorporating an additional key switch that controls the fuel solenoid to activate or deactivate as taught by Tharman for the purpose of allowing the engine or generator to operate or turning off the engine/generator when an operator desires. Furthermore, it is known in the art that

generators have a key to allow for operation to prevent theft and undesired use. Examiner notes that claim 10 is very broad and does not mention the two different fuels. Therefore the first fuel mode can be the fuel cut off mode and the second fuel mode can be regarded as the fuel bottle supply mode (first position).

Regarding claim 11, Sugimoto and Tharman disclose the fuel selector of claim 10 wherein the selector switch (Sugimoto, 12) triggers the solenoid switch (Sugimoto, 74) when changed from the second fuel mode to the first fuel mode, so as to cause the solenoid switch and the fuel solenoid to operate in the closed positions (Sugimoto, shown in figure 7). Examiner notes that when the switch (12) is changed from a fuel bottle mode to the off mode, the kill switch (74) is triggered to be closed.

Regarding claim 18, Sugimoto and Tharman disclose the same invention substantially as claimed, but is silent to disclose that the fuel solenoid is for a carburetor. However, the examiner takes Official Notice that it is well known in the art that carburetors are used in engines for the purpose of supplying a mixture of fuel/air into the combustion chamber of an engine. Therefore, it would have been obvious to one of ordinary skill in the art before the effective filing date of when the invention was made to have the fuel solenoid be used for a carburetor in carburetor type engines/generators for the purpose of supplying or cutting off fuel when operator desires.

Allowable Subject Matter

7. Claims 1-7, 9, 12-17, and 19 are objected to as being dependent upon a rejected base claim, but would be allowable if rewritten in independent form including all of the limitations of the base claim and any intervening claims.

8. The following is a statement of reasons for the indication of allowable subject matter: There is no prior art that teaches all the limitations that teaches all the limitations of claim 1, but more specifically, a fuel selector switch for a dual fuel generator having valve assembly fluidly coupled to a first fuel source and a second fuel source, a used can manually select one of a first fuel or a second fuel depending on the position of the selector switch, the valve assembly having two fuel inputs and two fuel outputs. All depending claims are allowable.

Response to Arguments

9. Applicant's arguments with respect to claim(s) 10 have been considered but are moot because the new ground of rejection does not rely on the Tharman reference applied in the rejection of record above for any teaching or matter specifically challenged in the argument.

Conclusion

10. The prior art made of record and not relied upon is considered pertinent to applicant's disclosure. Refer to PTO-892.

11. **THIS ACTION IS MADE FINAL.** Applicant is reminded of the extension of time policy as set forth in 37 CFR 1.136(a).

A shortened statutory period for reply to this final action is set to expire THREE MONTHS from the mailing date of this action. In the event a first reply is filed within TWO MONTHS of the mailing date of this final action and the advisory action is not mailed until after the end of the THREE-MONTH shortened statutory period, then the shortened statutory period will expire on the date the advisory action is mailed, and any extension fee pursuant to 37 CFR 1.136(a) will be calculated from the mailing date of

the advisory action. In no event, however, will the statutory period for reply expire later than SIX MONTHS from the mailing date of this final action.

12. Any inquiry concerning this communication or earlier communications from the examiner should be directed to SYED O HASAN whose telephone number is (571)272-0990. The examiner can normally be reached Monday-Friday; 11AM-7PM.

Examiner interviews are available via telephone, in-person, and video conferencing using a USPTO supplied web-based collaboration tool. To schedule an interview, applicant is encouraged to use the USPTO Automated Interview Request (AIR) at http://www.uspto.gov/interviewpractice.

If attempts to reach the examiner by telephone are unsuccessful, the examiner's supervisor, Lindsay Low can be reached on (571) 272-1196. The fax phone number for the organization where this application or proceeding is assigned is 571-273-8300.

Information regarding the status of published or unpublished applications may be obtained from Patent Center. Unpublished application information in Patent Center is available to registered users. To file and manage patent submissions in Patent Center, visit: https://patentcenter.uspto.gov. Visit https://www.uspto.gov/patents/apply/patent-center for more information about Patent Center and https://www.uspto.gov/patents/docx for information about filing in DOCX format. For additional questions, contact the Electronic Business Center (EBC) at 866-217-9197 (toll-free). If you would like assistance from a USPTO Customer Service Representative, call 800-786-9199 (IN USA OR CANADA) or 571-272-1000.

/SYED O HASAN/
Primary Examiner, Art Unit 3747
12/14/2021

Notice of References Cited	Application/Control No. 16/789,722	Applicant(s)/Patent Under Reexamination Sarder et al.	
	Examiner SYED O HASAN	Art Unit 3747	Page 1 of 1

U.S. PATENT DOCUMENTS

*		Document Number Country Code-Number-Kind Code	Date MM-YYYY	Name	CPC Classification	US Classification
*	A	US-20040246118-A1	12-2004	Tharman, Paul A.	F01M11/12	340/450
*	B	US-4489699-A	12-1984	Poehlman; Arthur G.	F02B69/04	123/525
*	C	US-20060169238-A1	08-2006	Mazuka; Naoto	F02B63/04	123/179.18
*	D	US-20040240141-A1	12-2004	Stolt, Peter E.	H01H47/18	361/160
*	E	US-20020125115-A1	09-2002	Burkholder, Robert F.	H01R13/465	200/51.11
*	F	US-20070137591-A1	06-2007	Sugimoto; Yasuhiro	F02D29/06	123/41.7
*	G	US-3696333-A	10-1972	Mott; Willard	F02N11/0803	290/38D
	H					
	I					
	J					
	K					
	L					
	M					

FOREIGN PATENT DOCUMENTS

*		Document Number Country Code-Number-Kind Code	Date MM-YYYY	Country	Name	CPC Classification
	N					
	O					
	P					
	Q					
	R					
	S					
	T					

NON-PATENT DOCUMENTS

*		Include as applicable: Author, Title Date, Publisher, Edition or Volume, Pertinent Pages)
	U	
	V	
	W	
	X	

*A copy of this reference is not being furnished with this Office action. (See MPEP § 707.05(a).)
Dates in MM-YYYY format are publication dates. Classifications may be US or foreign.

Index of Claims	Application/Control No.	Applicant(s)/Patent Under Reexamination
	16/789,722	Sarder et al.
	Examiner	**Art Unit**
	SYED O HASAN	3747

✓	Rejected	-	Cancelled	N	Non-Elected	A	Appeal
=	Allowed	÷	Restricted	I	Interference	O	Objected

CLAIMS

☐ Claims renumbered in the same order as presented by applicant ☐ CPA ☐ T.D. ☐ R.1.47

CLAIM		DATE								
Final	Original	03/08/2021	06/18/2021	12/14/2021						
	1	✓	O	=						
	2	✓	O	=						
	3	✓	O	=						
	4	O	O	=						
	5	✓	O	=						
	6	✓	O	=						
	7	O	O	=						
	8	O	O	=						
	9	✓	O	=						
	10	✓	✓	✓						
	11	✓	✓	✓						
	12	✓	O	=						
	13	✓	O	=						
	14	✓	O	=						
	15	✓	O	=						
	16	✓	O	=						
	17	✓	O	=						
	18			✓						
	19			O						

Search Notes	Application/Control No.	Applicant(s)/Patent Under Reexamination
	16/789,722	Sarder et al.
	Examiner	**Art Unit**
	SYED O HASAN	3747

CPC - Searched*		
Symbol	**Date**	**Examiner**
F02D19/0676, 19/0613, 19/0647, 29/06, 19/0681, F02M21/0293, 21/0236, 13/08, F02B53/00, 63/00, H02K1/22	03/08/2021	/S.O.H/
Updated Search	06/17/2021	/S.O.H/
Updated Search	12/14/2021	/S.O.H/

CPC Combination Sets - Searched*		
Symbol	**Date**	**Examiner**

US Classification - Searched*			
Class	**Subclass**	**Date**	**Examiner**

* See search history printout included with this form or the SEARCH NOTES box below to determine the scope of the search.

Search Notes		
Search Notes	**Date**	**Examiner**
Searched in subclasses above with keywords.	03/08/2021	/S.O.H/
EAST search strategy attached. Inventor name searches performed.	03/08/2021	/S.O.H/

Interference Search			
US Class/CPC Symbol	**US Subclass/CPC Group**	**Date**	**Examiner**

	/SYED O HASAN/ Primary Examiner, Art Unit 3747

Champion - EX2109, Page 62 of 403
Generac Power Systems, Inc. et al v. Champion Power Equip., Inc.
IPR2025-01438

EAST Search History

EAST Search History (Prior Art)

Ref #	Hits	Search Query	DBs	Default Operator	Plurals	Time Stamp
S1	11	((Mark) near2 (Sarder)).INV.	US-PGPUB; USPAT; USOCR	OR	OFF	2015/06/23 14:16
S2	2	((Leigh) near2 (Jenison)).INV.	US-PGPUB; USPAT; USOCR	OR	OFF	2015/06/23 14:17
S3	2	((Ian) near2 (Schmit)).INV.	US-PGPUB; USPAT; USOCR	OR	OFF	2015/06/23 14:18
S4	834	123/525.ccls.	US-PGPUB; USPAT; USOCR; FPRS; EPO; JPO; DERWENT	OR	OFF	2015/06/23 14:20
S5	3	123/525.ccls. and (dual near3 fuel near3 generator)	US-PGPUB; USPAT; USOCR; FPRS; EPO; JPO; DERWENT	OR	OFF	2015/06/23 14:20
S6	2	123/525.ccls. and (((multiple near3 fuel) or bi-fuel) near3 generator)	US-PGPUB; USPAT; USOCR; FPRS; EPO; JPO; DERWENT	OR	OFF	2015/06/23 14:21
S7	3	123/525.ccls. and (((multiple near3 fuel) or bi-fuel or (LPG near5 gasoline)) near10 generator)	US-PGPUB; USPAT; USOCR; FPRS; EPO; JPO; DERWENT	OR	OFF	2015/06/23 14:22
S8	236	(((multiple near3 fuel) or bi-fuel or (LPG near5 gasoline)) near10 generator)	US-PGPUB; USPAT; USOCR; FPRS; EPO; JPO; DERWENT	OR	OFF	2015/06/23 14:22
S9	10	(((multiple near3 fuel) or bi-fuel or (LPG near5 gasoline)) near10 generator) same (switch)	US-PGPUB; USPAT; USOCR;	OR	OFF	2015/06/23 14:23

			FPRS; EPO; JPO; DERWENT			
S10	458	f02D19/0676.cpc.	US-PGPUB; USPAT; USOCR; FPRS; EPO; JPO; DERWENT	OR	OFF	2015/06/23 14:23
S11	17	F02D19/0676.cpc. and (generator)	US-PGPUB; USPAT; USOCR; FPRS; EPO; JPO; DERWENT	OR	OFF	2015/06/23 14:24
S12	6	F02M21/0293.cpc. and (generator)	US-PGPUB; USPAT; USOCR; FPRS; EPO; JPO; DERWENT	OR	OFF	2015/06/23 14:24
S13	14	F02M21/0236.cpc. and (generator)	US-PGPUB; USPAT; USOCR; FPRS; EPO; JPO; DERWENT	OR	OFF	2015/06/23 14:25
S14	18	F02M21/0233.cpc. and (generator)	US-PGPUB; USPAT; USOCR; FPRS; EPO; JPO; DERWENT	OR	OFF	2015/06/23 14:27
S15	21	F02M13/08.cpc. and (generator)	US-PGPUB; USPAT; USOCR; FPRS; EPO; JPO; DERWENT	OR	OFF	2015/06/23 14:29
S16	0	(generator) and (dual near3 fuel) and (selectro near3 switch)	US-PGPUB; USPAT; USOCR; FPRS; EPO; JPO; DERWENT	OR	OFF	2015/06/23 14:32
S17	16	(generator) and (dual near3 fuel) and (selector near3 switch)	US-PGPUB; USPAT; USOCR; FPRS; EPO;	OR	OFF	2015/06/23 14:32

			JPO; DERWENT			
S18	42	(generator) and ((dual near3 fuel) or (bi-fuel) or (multiple near3 fuel)) and (selector near3 switch)	US-PGPUB; USPAT; USOCR; FPRS; EPO; JPO; DERWENT	OR	OFF	2015/06/23 14:33
S19	46	(generator) and ((dual near3 fuel) or (bi-fuel) or (multiple near3 fuel)) and (fuel near5 select$4 near5 switch)	US-PGPUB; USPAT; USOCR; FPRS; EPO; JPO; DERWENT	OR	OFF	2015/06/23 14:39
S20	46	(generator or genset) and ((dual near3 fuel) or (bi-fuel) or (multiple near3 fuel)) and (fuel near5 select$4 near5 switch)	US-PGPUB; USPAT; USOCR; FPRS; EPO; JPO; DERWENT	OR	OFF	2015/06/23 14:40
S21	728	137/383.ccls.	US-PGPUB; USPAT; USOCR; FPRS; EPO; JPO; DERWENT	OR	OFF	2015/06/23 14:58
S22	96	137/384.8.ccls.	US-PGPUB; USPAT; USOCR; FPRS; EPO; JPO; DERWENT	OR	OFF	2015/06/23 14:58
S23	0	317/317.5.ccls.	US-PGPUB; USPAT; USOCR; FPRS; EPO; JPO; DERWENT	OR	OFF	2015/06/23 15:04
S24	133	273/317.5.ccls.	US-PGPUB; USPAT; USOCR; FPRS; EPO; JPO; DERWENT	OR	OFF	2015/06/23 15:04
S25	161	292/4.ccls.	US-PGPUB; USPAT; USOCR; FPRS; EPO;	OR	OFF	2015/06/23 15:06

			JPO; DERWENT			
S26	106	292/290.ccls.	US-PGPUB; USPAT; USOCR; FPRS; EPO; JPO; DERWENT	OR	OFF	2015/06/23 15:07
S27	578	49/503.ccls.	US-PGPUB; USPAT; USOCR; FPRS; EPO; JPO; DERWENT	OR	OFF	2015/06/23 15:15
S28	92	123/2-3.ccls. and (fuel near5 switch)	US-PGPUB; USPAT; USOCR; FPRS; EPO; JPO; DERWENT	OR	OFF	2015/06/23 15:16
S29	163	(generator) same (LPG near20 gasoline)	US-PGPUB; USPAT; USOCR; FPRS; EPO; JPO; DERWENT	OR	OFF	2015/06/23 15:35
S30	163	(generator) same (LPG near20 gasoline)	US-PGPUB; USPAT; USOCR; FPRS; EPO; JPO; DERWENT	OR	OFF	2015/06/23 15:35
S31	19	(fuel near3 select$4 near3 switch) and (LPG near20 gasoline)	US-PGPUB; USPAT; USOCR; FPRS; EPO; JPO; DERWENT	OR	OFF	2015/06/23 15:53
S32	321,499	(select$4 near3 switch)	US-PGPUB; USPAT; USOCR; FPRS; EPO; JPO; DERWENT	OR	OFF	2015/06/23 15:55
S33	1,395	(select$4 near3 switch) same (enclosure)	US-PGPUB; USPAT; USOCR; FPRS; EPO;	OR	OFF	2015/06/23 15:55

			JPO; DERWENT			
S34	123	(switch) same (enclosure) same (first near3 valve) same (second near3 valve)	US-PGPUB; USPAT; USOCR; FPRS; EPO; JPO; DERWENT	OR	OFF	2015/06/23 15:56
S35	0	(switch) same (genset) same (first near3 valve) same (second near3 valve)	US-PGPUB; USPAT; USOCR; FPRS; EPO; JPO; DERWENT	OR	OFF	2015/06/23 15:58
S36	11	(genset) and ((switch) same (first near3 valve) same (second near3 valve))	US-PGPUB; USPAT; USOCR; FPRS; EPO; JPO; DERWENT	OR	OFF	2015/06/23 15:58
S37	550	(slider near3 switch).ti.	US-PGPUB; USPAT; USOCR; FPRS; EPO; JPO; DERWENT	OR	OFF	2015/06/23 16:17
S38	28	(slider near3 switch).ti.	US-PGPUB; USPAT	OR	OFF	2015/06/23 16:19
S39	2	("7135651" | "7223931").PN. OR ("7772508").URPN.	US-PGPUB; USPAT; USOCR	OR	OFF	2015/06/23 16:20
S40	209	200/241.ccls.	US-PGPUB; USPAT	OR	OFF	2015/06/23 16:23
S41	45	200/241.ccls. and (groove or slot)	US-PGPUB; USPAT	OR	OFF	2015/06/23 16:23
S42	151	290/1A.ccls. and (groove or slot)	US-PGPUB; USPAT; USOCR; FPRS; EPO; JPO; DERWENT	OR	OFF	2015/06/23 16:24
S43	414	290/1A.ccls. and (switch)	US-PGPUB; USPAT; USOCR; FPRS; EPO; JPO; DERWENT	OR	OFF	2015/06/23 16:25

S44	45	290/1A.ccls. and (select$4 near3 switch)	US-PGPUB; USPAT; USOCR; FPRS; EPO; JPO; DERWENT	OR	OFF	2015/06/23 16:25
S45	16,208	(select$4 near3 switch).ti.	US-PGPUB; USPAT; USOCR; FPRS; EPO; JPO; DERWENT	OR	OFF	2015/06/23 16:30
S46	42	(fuel near3 select$4 near3 switch).ti.	US-PGPUB; USPAT; USOCR; FPRS; EPO; JPO; DERWENT	OR	OFF	2015/06/23 16:30
S47	1	("2004/0240141").URPN.	USPAT	OR	OFF	2015/06/23 16:31
S48	436	261/16.ccls.	USPAT	OR	OFF	2015/06/23 16:38
S49	18	261/16.ccls. and switch	USPAT	OR	OFF	2015/06/23 16:38
S50	0	48/180R.ccls.	USPAT	OR	OFF	2015/06/23 16:38
S51	0	48/180C.ccls.	USPAT	OR	OFF	2015/06/23 16:38
S52	0	48/180C.ccls.	US-PGPUB; USPAT; USOCR; FPRS; EPO; JPO; DERWENT	OR	OFF	2015/06/23 16:39
S53	834	123/525.ccls.	US-PGPUB; USPAT; USOCR; FPRS; EPO; JPO; DERWENT	OR	OFF	2015/06/23 16:39
S54	215	123/525.ccls. and (switch)	US-PGPUB; USPAT; USOCR; FPRS; EPO; JPO; DERWENT	OR	OFF	2015/06/23 16:39
S55	76	123/525.ccls. and (switch) and (dual near3 fuel)	US-PGPUB; USPAT;	OR	OFF	2015/06/23 16:39

			USOCR; FPRS; EPO; JPO; DERWENT			
S56	15	("20130122439" | "20130098349" | "20060169238" | "20040240141" | "4489699").PN.	US-PGPUB; USPAT; USOCR; FPRS; EPO; JPO; DERWENT	OR	OFF	2015/06/29 14:24
S57	2	(dual near3 fuel near3 engine) same (fuel near3 handle)	US-PGPUB; USPAT; USOCR	OR	OFF	2015/12/17 18:15
S58	3	(dual near3 fuel near3 engine) same (fuel near3 handle)	US-PGPUB; USPAT; USOCR; FPRS; EPO; JPO; DERWENT	OR	OFF	2015/12/17 18:16
S59	16	(dual near3 fuel near3 engine) same (fuel near3 lever)	US-PGPUB; USPAT; USOCR; FPRS; EPO; JPO; DERWENT	OR	OFF	2015/12/17 18:17
S60	5	(dual near3 fuel near3 engine) same (fuel near3 valve near3 (lever or switch or handle))	US-PGPUB; USPAT; USOCR; FPRS; EPO; JPO; DERWENT	OR	OFF	2015/12/17 18:23
S61	6	(dual near3 fuel near3 (engine or generator)) same (fuel near3 valve near3 (lever or switch or handle))	US-PGPUB; USPAT; USOCR; FPRS; EPO; JPO; DERWENT	OR	OFF	2015/12/17 18:45
S62	24	(dual near3 fuel near3 (engine or generator)) same (fuel near3 (valve or supply) near3 (lever or switch or handle))	US-PGPUB; USPAT; USOCR; FPRS; EPO; JPO; DERWENT	OR	OFF	2015/12/17 18:45
S63	4,939	(gas near3 station).ti.	US-PGPUB; USPAT; USOCR; FPRS; EPO; JPO; DERWENT	OR	OFF	2015/12/17 18:55

S64	39	(gas near3 station).ti. and lever	US-PGPUB; USPAT; USOCR; FPRS; EPO; JPO; DERWENT	OR	OFF	2015/12/17 18:55
S65	292	(generator).ti. and ((dual or multiple) near3 (fuel))	US-PGPUB; USPAT; USOCR; FPRS; EPO; JPO; DERWENT	OR	OFF	2015/12/17 18:56
S66	98	(generator).ti. and ((dual or multiple) near3 (fuel)) and (engine)	US-PGPUB; USPAT; USOCR; FPRS; EPO; JPO; DERWENT	OR	OFF	2015/12/17 18:56
S67	13	(generator).ti. and (((dual or multiple) near3 (fuel)) same (switch or handle or lever)) and (engine)	US-PGPUB; USPAT; USOCR; FPRS; EPO; JPO; DERWENT	OR	OFF	2015/12/17 18:56
S69	39	"4489699"	US-PGPUB; USPAT; USOCR	OR	OFF	2017/12/28 20:09
S70	14	F02D19/0613.cpc. and ((dual near3 fuel) same (switch))	US-PGPUB; USPAT; USOCR	OR	OFF	2018/01/02 20:38
S71	25	F02D19/0613.cpc. and ((dual near3 fuel) same (switch))	US-PGPUB; USPAT; USOCR; FPRS; EPO; JPO; DERWENT	OR	OFF	2018/01/02 20:38
S72	72	F02D19/0647.cpc. and ((dual near3 fuel) same (switch))	US-PGPUB; USPAT; USOCR; FPRS; EPO; JPO; DERWENT	OR	OFF	2018/01/02 20:39
S73	77	F02D19/0647.cpc. and ((dual near3 fuel) same (switch))	US-PGPUB; USPAT; USOCR; FPRS; EPO; JPO; DERWENT	OR	ON	2018/01/02 20:39

S74	11	F02D19/06.cpc. and ((dual near3 fuel) same (switch))	US-PGPUB; USPAT; USOCR; FPRS; EPO; JPO; DERWENT	OR	ON	2018/01/02 20:40
S75	32	F02M13/08.cpc. and ((dual near3 fuel) same (switch))	US-PGPUB; USPAT; USOCR; FPRS; EPO; JPO; DERWENT	OR	ON	2018/01/02 20:41
S76	9	(fuel near3 select$4 near3 switch) same (valve near3 assembly)	US-PGPUB; USPAT; USOCR; FPRS; EPO; JPO; DERWENT	OR	OFF	2018/08/01 21:24
S77	0	(geneartor) same (fuel near3 switch) same (valve near3 assembly)	US-PGPUB; USPAT; USOCR; FPRS; EPO; JPO; DERWENT	OR	OFF	2018/08/01 21:25
S78	9	(generator) same (fuel near3 switch) same (valve near3 assembly)	US-PGPUB; USPAT; USOCR; FPRS; EPO; JPO; DERWENT	OR	OFF	2018/08/01 21:25
S79	6,704	(generator) same (fuel near3 valve)	US-PGPUB; USPAT; USOCR; FPRS; EPO; JPO; DERWENT	OR	OFF	2018/08/01 21:26
S80	10	(generator) same (dual near2 fuel near3 valve)	US-PGPUB; USPAT; USOCR; FPRS; EPO; JPO; DERWENT	OR	OFF	2018/08/01 21:26
S81	13	(generator) same (dual near2 fuel near3 switch)	US-PGPUB; USPAT; USOCR; FPRS; EPO; JPO; DERWENT	OR	OFF	2018/08/01 21:27

S82	13	(generator) same (dual near3 fuel near3 switch)	US-PGPUB; USPAT; USOCR; FPRS; EPO; JPO; DERWENT	OR	OFF	2018/08/01 21:28
S83	19	(gaseous near3 fuel) same (dual near3 fuel near3 switch)	US-PGPUB; USPAT; USOCR; FPRS; EPO; JPO; DERWENT	OR	OFF	2018/08/01 21:54
S84	52	(gaseous near3 fuel) same (fuel near3 select$4 near3 switch)	US-PGPUB; USPAT; USOCR; FPRS; EPO; JPO; DERWENT	OR	OFF	2018/08/01 21:56
S85	85	F02D19/0613.cpc. and (switch same valve)	US-PGPUB; USPAT; USOCR; FPRS; EPO; JPO; DERWENT	OR	OFF	2018/08/01 22:03
S86	31	F02D19/0613.cpc. and (switch same valve same (user or operator))	US-PGPUB; USPAT; USOCR; FPRS; EPO; JPO; DERWENT	OR	OFF	2018/08/01 22:04
S87	25	F02D19/081.cpc. and (switch same valve same (user or operator))	US-PGPUB; USPAT; USOCR; FPRS; EPO; JPO; DERWENT	OR	OFF	2018/08/01 22:08
S88	16	F02D19/0642.cpc. and (switch same valve same (user or operator))	US-PGPUB; USPAT; USOCR; FPRS; EPO; JPO; DERWENT	OR	OFF	2018/08/01 22:10
S89	39	"4489699"	USPAT	OR	OFF	2018/08/02 14:52
S90	1	"20040240141"	USPAT	OR	OFF	2018/08/02 14:53
S91	3	"20040240141"	US-PGPUB; USPAT; USOCR;	OR	OFF	2018/08/02 14:53

			FPRS; EPO; JPO; DERWENT			
S92	3	"20060169238"	US-PGPUB; USPAT; USOCR; FPRS; EPO; JPO; DERWENT	OR	OFF	2018/08/02 14:53
S93	4	"20130098349"	US-PGPUB; USPAT; USOCR; FPRS; EPO; JPO; DERWENT	OR	OFF	2018/08/02 14:55
S94	5	"20130122439"	US-PGPUB; USPAT; USOCR; FPRS; EPO; JPO; DERWENT	OR	OFF	2018/08/02 14:58
S95	1	"20060169238"	USPAT	OR	OFF	2018/08/02 14:58
S96	0	123/198E.ccls. and (duel near3 fuel)	USPAT	OR	OFF	2018/08/02 15:01
S97	1	123/198E.ccls. and (dual near3 fuel)	USPAT	OR	OFF	2018/08/02 15:01
S98	1	123/198E.ccls. and (dual near3 fuel)	US-PGPUB; USPAT; USOCR; FPRS; EPO; JPO; DERWENT	OR	OFF	2018/08/02 15:02
S99	10	123/2.ccls. and (dual near3 fuel)	US-PGPUB; USPAT; USOCR; FPRS; EPO; JPO; DERWENT	OR	OFF	2018/08/02 16:27
S100	0	60/39.463. and (dual near3 fuel)	US-PGPUB; USPAT; USOCR; FPRS; EPO; JPO; DERWENT	OR	OFF	2018/08/02 16:31
S101	121	60/39.463.ccls. and (dual near3 fuel)	US-PGPUB; USPAT; USOCR;	OR	OFF	2018/08/02 16:31

			FPRS; EPO; JPO; DERWENT			
S102	34	60/39.463.ccls. and ((dual near3 fuel) same (valve))	US-PGPUB; USPAT; USOCR; FPRS; EPO; JPO; DERWENT	OR	OFF	2018/08/02 16:32
S103	50	"4489699"	US-PGPUB; USPAT; USOCR; FPRS; EPO; JPO; DERWENT	OR	OFF	2018/08/02 17:42
S104	5	generator and (((dual or multiple or second$4) near3 (fuel)) same (valve near2 handle) same (user or operator or manual or manually))	US-PGPUB; USPAT; USOCR; FPRS; EPO; JPO; DERWENT	OR	ON	2019/06/16 23:09
S105	16	generator and (((dual or multiple or second$4) near3 (fuel)) same (valve near2 handle))	US-PGPUB; USPAT; USOCR; FPRS; EPO; JPO; DERWENT	OR	ON	2019/06/16 23:10
S106	20	generator and (((dual or multiple or second$4) near3 (fuel)) same (valve near3 handle))	US-PGPUB; USPAT; USOCR; FPRS; EPO; JPO; DERWENT	OR	ON	2019/06/16 23:10
S107	540	generator and (((dual or multiple or second$4) near3 (fuel)) same (valve) same (user or operator or manual or manually))	US-PGPUB; USPAT; USOCR; FPRS; EPO; JPO; DERWENT	OR	ON	2019/06/16 23:12
S108	124	generator and (((dual or multiple or second$4) near3 (fuel)) same (valve) same (user or operator or manual or manually) same switch)	US-PGPUB; USPAT; USOCR; FPRS; EPO; JPO; DERWENT	OR	ON	2019/06/16 23:13
S109	4	("2681694").URPN.	USPAT	OR	OFF	2019/06/16 23:23

S110	37	F02D19/0676.cpc. and ((valve) same (user or operator or manual or manually) same switch)	US-PGPUB; USPAT; USOCR; FPRS; EPO; JPO; DERWENT	OR	ON	2019/06/17 17:17
S111	19	F02D19/0681.cpc. and ((valve) same (user or operator or manual or manually) same switch)	US-PGPUB; USPAT; USOCR; FPRS; EPO; JPO; DERWENT	OR	ON	2019/06/17 17:21
S112	3	("2008/0022983").URPN.	USPAT	OR	OFF	2019/06/17 17:25
S113	0	F02B2063/046.cpc. and ((valve) same (user or operator or manual or manually) same switch)	US-PGPUB; USPAT; USOCR; FPRS; EPO; JPO; DERWENT	OR	ON	2019/06/17 17:29
S114	23	F02B2063/046.cpc. and ((valve) same (user or operator or manual or manually))	US-PGPUB; USPAT; USOCR; FPRS; EPO; JPO; DERWENT	OR	ON	2019/06/17 17:29
S115	23	F02B2063/046.cpc. and ((valve) same (user or operator or manual or manually or mechanically or mechanical))	US-PGPUB; USPAT; USOCR; FPRS; EPO; JPO; DERWENT	OR	ON	2019/06/17 17:54
S116	33	F02B63/048.cpc. and ((valve) same (user or operator or manual or manually or mechanically or mechanical))	US-PGPUB; USPAT; USOCR; FPRS; EPO; JPO; DERWENT	OR	ON	2019/06/17 17:54
S117	1,201	(((dual or multiple or second$4 or bi) near3 (fuel)) same generator) and ((valve) same (user or operator or manual or manually or mechanically or mechanical))	US-PGPUB; USPAT; USOCR; FPRS; EPO; JPO; DERWENT	OR	ON	2019/06/17 18:00
S118	72	(((dual or multiple or second$4 or bi) near3 (fuel)) same generator) and ((valve) same (user or operator or manual or manually or mechanically or mechanical) same handle)	US-PGPUB; USPAT; USOCR; FPRS; EPO;	OR	ON	2019/06/17 18:01

			JPO; DERWENT			
S119	14	(((dual or multiple or second$4 or bi) near3 (fuel)) same generator).ti. and ((valve) same (user or operator or manual or manually or mechanically or mechanical))	US-PGPUB; USPAT; USOCR; FPRS; EPO; JPO; DERWENT	OR	ON	2019/06/17 18:05
S120	5	(((dual or multiple or second$4 or bi) near3 (fuel)) same generator).ti. and ((valve) same handle)	US-PGPUB; USPAT; USOCR; FPRS; EPO; JPO; DERWENT	OR	ON	2019/06/17 18:12
S121	139	(((dual or multiple or second$4 or bi) near3 (fuel)) same generator) and ((valve) same handle)	US-PGPUB; USPAT; USOCR; FPRS; EPO; JPO; DERWENT	OR	ON	2019/06/17 18:12
S122	34	(((dual or multiple or second$4 or bi) near3 (fuel)) same generator) and ((valve) near3 handle)	US-PGPUB; USPAT; USOCR; FPRS; EPO; JPO; DERWENT	OR	ON	2019/06/17 18:12
S123	555	generator and (((dual or multiple or second$4 or bi) near3 (fuel)) same (valve) same (user or operator or manual or manually))	US-PGPUB; USPAT; USOCR; FPRS; EPO; JPO; DERWENT	OR	ON	2019/06/17 18:23
S124	310	(((dual or multiple or second$4 or bi) near3 (fuel)) same generator) and ((valve) near3 (switch or lever or selector))	US-PGPUB; USPAT; USOCR; FPRS; EPO; JPO; DERWENT	OR	ON	2019/06/17 18:23
S125	275	(generator same (case or casing or housing or enclosure)) and (((dual or multiple or second$4 or bi) near3 (fuel))) and ((valve) same (fuel near3 (switch or lever or selector or handle)))	US-PGPUB; USPAT; USOCR; FPRS; EPO; JPO; DERWENT	OR	ON	2019/06/17 18:36
S126	9	("2007/0137591").URPN.	USPAT	OR	OFF	2019/06/17 18:40
S127	725,165	(generator).ti. engine and (((dual or multiple or second$4 or bi) near3	US-PGPUB; USPAT; USOCR;	OR	ON	2019/06/17 18:48

		(fuel))) and ((valve) same (fuel near3 (switch or lever or selector or handle)))	FPRS; EPO; JPO; DERWENT			
S128	23	(generator).ti. and engine and (((dual or multiple or second$4 or bi) near3 (fuel))) and ((valve) same (fuel near3 (switch or lever or selector or handle)))	US-PGPUB; USPAT; USOCR; FPRS; EPO; JPO; DERWENT	OR	ON	2019/06/17 18:49
S129	47	(generator).ti. and engine and (((dual or multiple or second$4 or bi) near3 (fuel))) and ((fuel near3 (switch or lever or selector or handle)))	US-PGPUB; USPAT; USOCR; FPRS; EPO; JPO; DERWENT	OR	ON	2019/06/17 18:49
S130	0	(((dual or multiple or second$4 or bi) near3 (fuel) near3 gnerator)) and (second$4 near3 (fuel near3 (switch or lever or selector or handle)))	US-PGPUB; USPAT; USOCR; FPRS; EPO; JPO; DERWENT	OR	ON	2019/06/17 18:56
S131	18	(((dual or multiple or second$4 or bi) near3 (fuel) near3 generator)) and (second$4 near3 (fuel near3 (switch or lever or selector or handle)))	US-PGPUB; USPAT; USOCR; FPRS; EPO; JPO; DERWENT	OR	ON	2019/06/17 18:57
S132	34	(((dual or multiple or second$4 or bi) near3 (fuel) near3 generator)) and ((user or manual or manually or operator or mechanically) same (fuel near3 (switch or lever or selector or handle)))	US-PGPUB; USPAT; USOCR; FPRS; EPO; JPO; DERWENT	OR	ON	2019/06/17 19:00
S133	393	(generator or genset) and (((dual or multiple or second$4 or bi) near3 (fuel))) and ((user or manual or manually or operator or mechanically) same (fuel near3 (switch or lever or selector or handle)))	US-PGPUB; USPAT; USOCR; FPRS; EPO; JPO; DERWENT	OR	ON	2019/06/17 19:03
S134	433	123/525.ccls.	USPAT	OR	OFF	2019/06/17 19:31
S135	186	123/525.ccls. and (fuel same valve same (handle or switch or lever or selector))	US-PGPUB; USPAT; USOCR; FPRS; EPO; JPO; DERWENT	OR	OFF	2019/06/17 19:31

S136	22	123/525.ccls. and (generator or genset) and (fuel same valve same (handle or switch or lever or selector))	US-PGPUB; USPAT; USOCR; FPRS; EPO; JPO; DERWENT	OR	OFF	2019/06/17 19:32
S137	5	"20070137591"	US-PGPUB; USPAT; USOCR; FPRS; EPO; JPO; DERWENT	OR	OFF	2019/06/17 19:37
S138	1	"20070137591"	USPAT	OR	OFF	2019/09/25 13:50
S139	2	"20070137591"	US-PGPUB; USPAT	OR	OFF	2019/09/25 13:50
S140	46	"4489699"	US-PGPUB; USPAT	OR	OFF	2019/09/25 13:50
S141	63	("20020134362" | "20040139943" | "20100258099" | "20110168133" | "20110253102" | "20130047964" | "20130220274" | "20140202430" | "20140238340" | "20140373531" | "20150122230" | "2722208" | "3384059" | "3412258" | "3659574" | "3718000" | "3783849" | "3888223" | "4335697" | "4372276" | "4373493" | "4393848" | "4450821" | "4463735" | "4480595" | "4502453" | "4619240" | "4628871" | "4708094" | "4895124" | "4979480" | "5092305" | "5161496" | "5171487" | "5228423" | "5287839" | "5320078" | "5325835" | "5379740" | "5419291" | "5438968" | "5450832" | "5611312" | "5673670" | "5809979" | "5816224" | "6082323" | "6213083" | "6223730" | "6276345" | "6401685" | "6453877" | "6591817" | "6914342" | "7905469" | "8342158" | "8590510" | "9435273" | "20040240141" | "20060169238" | "20130098349" | "20130122439" | "4489699").PN.	US-PGPUB; USPAT	OR	OFF	2019/12/19 20:00
S143	1	"10598101"	USPAT	OR	OFF	2021/02/23 08:07
S144	1	"20070137591"	USPAT	OR	OFF	2021/03/08 19:48
S145	2	"20070137591"	US-PGPUB; USPAT	OR	OFF	2021/03/08 19:48

S146	5	"10598101"	US-PGPUB; USPAT	OR	OFF	2021/03/08 20:36
S147	49	"4489699"	US-PGPUB; USPAT	OR	OFF	2021/03/08 21:16
S148	0	carburettor near3 solenoid near3 switch	US-PGPUB; USPAT	OR	OFF	2021/03/08 21:21
S149	0	carburettor near3 solenoid near3 switch	US-PGPUB; USPAT; USOCR; FPRS; EPO; JPO	OR	OFF	2021/03/08 21:22
S150	43	carbur$8 near3 solenoid near3 switch	US-PGPUB; USPAT; USOCR; FPRS; EPO; JPO	OR	OFF	2021/03/08 21:22
S151	38	engine and (carbur$8 near3 solenoid near3 switch)	US-PGPUB; USPAT; USOCR; FPRS; EPO; JPO	OR	OFF	2021/03/08 21:22
S152	0	engine and geneartor and (carbur$8 near3 solenoid near3 switch)	US-PGPUB; USPAT; USOCR; FPRS; EPO; JPO	OR	OFF	2021/03/08 21:22
S153	26	engine and generator and (carbur$8 near3 solenoid near3 switch)	US-PGPUB; USPAT; USOCR; FPRS; EPO; JPO	OR	OFF	2021/03/08 21:22
S154	19	("20070137591" | "2398437" | "3911956" | "4323046" | "4375795" | "4471805" | "4492207" | "4750514" | "4788960" | "5934320" | "6543395" | "6591817" | "7591257" | "7802562" | "7905469" | "8042569" | "8757139" | "8944027" | "9175601").PN.	US-PGPUB; USPAT	OR	OFF	2021/03/08 22:09
S155	10	(generator) and (engine) and ((fuel near3 selector) same (second$4 near3 (outlet or output)))	US-PGPUB; USPAT; USOCR; FPRS; EPO; JPO; DERWENT	OR	ON	2021/06/15 12:17
S156	6,020	(generator) and (engine) and ((dual enar3 fuel) same (second$4 near3 (outlet or output)))	US-PGPUB; USPAT; USOCR; FPRS; EPO;	OR	ON	2021/06/15 12:19

			JPO; DERWENT			
S157	31	(generator) and (engine) and ((dual near3 fuel) same (second$4 near3 (outlet or output)))	US-PGPUB; USPAT; USOCR; FPRS; EPO; JPO; DERWENT	OR	ON	2021/06/15 12:19
S158	5	(generator) and (engine) and ((dual or second$4) near3 fuel) and ((solenoid near3 switch) same (fuel adj solenoid))	US-PGPUB; USPAT; USOCR; FPRS; EPO; JPO; DERWENT	OR	ON	2021/06/15 13:33
S159	27	(generator) and (engine) and ((dual or second$4) near3 fuel) and (fuel near3 solenoid near3 switch)	US-PGPUB; USPAT; USOCR; FPRS; EPO; JPO; DERWENT	OR	ON	2021/06/15 13:37
S160	21	(generator) and (engine) and ((dual or second$4) near3 fuel) and (fuel near3 (cut or cut-off) near3 switch)	US-PGPUB; USPAT; USOCR; FPRS; EPO; JPO; DERWENT	OR	ON	2021/06/15 14:08
S161	958	(generator) and (engine) and ((dual or second$4) near3 fuel) and (fuel near3 switch)	US-PGPUB; USPAT; USOCR; FPRS; EPO; JPO; DERWENT	OR	ON	2021/06/15 14:09
S162	348	(generator) and (engine) and (((dual or second$4) near3 fuel) same (fuel near3 switch))	US-PGPUB; USPAT; USOCR; FPRS; EPO; JPO; DERWENT	OR	ON	2021/06/15 14:10
S163	83	(engine) and (((dual or second$4) near3 fuel) same (selector near3 switch) same (fuel near3 switch))	US-PGPUB; USPAT; USOCR; FPRS; EPO; JPO; DERWENT	OR	ON	2021/06/15 14:13
S164	1,492	(engine) and (((dual or second$4) near3 fuel) same (fuel near3 switch))	US-PGPUB; USPAT; USOCR; FPRS; EPO;	OR	ON	2021/06/15 14:41

			JPO; DERWENT			
S165	0	gneerator and (engine) and (((dual or second$4) near3 fuel) same (fuel near3 switch))	US-PGPUB; USPAT; USOCR; FPRS; EPO; JPO; DERWENT	OR	ON	2021/06/15 14:41
S166	348	generator and (engine) and (((dual or second$4) near3 fuel) same (fuel near3 switch))	US-PGPUB; USPAT; USOCR; FPRS; EPO; JPO; DERWENT	OR	ON	2021/06/15 14:41
S167	14	("2006/0065216").URPN.	USPAT	OR	OFF	2021/06/15 14:59
S168	100	engine and ((fuel near3 selector) same (fuel near3 switch))	USPAT	OR	OFF	2021/06/15 17:11
S169	2	engine and ((fuel near3 selector) same (kill near3 switch))	USPAT	OR	OFF	2021/06/15 17:11
S170	4	engine and ((fuel near3 selector) same (kill near3 switch))	US-PGPUB; USPAT; USOCR; FPRS; EPO; JPO; DERWENT	OR	OFF	2021/06/15 17:11
S171	0	engine and ((dual near3 duel) same (kill near3 switch))	US-PGPUB; USPAT; USOCR; FPRS; EPO; JPO; DERWENT	OR	OFF	2021/06/15 17:12
S172	0	engine and ((dual near3 fuel) same (kill near3 switch))	US-PGPUB; USPAT; USOCR; FPRS; EPO; JPO; DERWENT	OR	OFF	2021/06/15 17:12
S173	5	engine and ((dual near3 fuel) same ((cut or cut-off) near3 switch))	US-PGPUB; USPAT; USOCR; FPRS; EPO; JPO; DERWENT	OR	OFF	2021/06/15 17:12
S174	7	("20070215223" | "4287908" | "4364370" | "4416244" | "5555873" | "7954479" | "9523497").PN.	US-PGPUB; USPAT	OR	OFF	2021/06/15 17:17

S175	10	"4306579"	US-PGPUB; USPAT	OR	OFF	2021/06/15 17:27
S176	8,655	generator and (solenoid near3 switch)	US-PGPUB; USPAT; USOCR; FPRS; EPO; JPO; DERWENT	OR	ON	2021/06/17 16:52
S177	1,022	generator and ((solenoid near3 switch) near5 (closed))	US-PGPUB; USPAT; USOCR; FPRS; EPO; JPO; DERWENT	OR	ON	2021/06/17 16:53
S178	238	generator and ((solenoid near3 switch) near5 (closed) near5 open)	US-PGPUB; USPAT; USOCR; FPRS; EPO; JPO; DERWENT	OR	ON	2021/06/17 16:53
S179	9	generator and ((solenoid near3 switch) near5 (closed) near5 (fuel))	US-PGPUB; USPAT; USOCR; FPRS; EPO; JPO; DERWENT	OR	ON	2021/06/17 16:54
S180	2	generator and ((solenoid near3 switch) same (fuel near3 mode))	US-PGPUB; USPAT; USOCR; FPRS; EPO; JPO; DERWENT	OR	ON	2021/06/17 17:09
S181	721	generator and ((solenoid near3 switch) same (fuel))	US-PGPUB; USPAT; USOCR; FPRS; EPO; JPO; DERWENT	OR	ON	2021/06/17 17:09
S182	132	generator and ((solenoid near3 switch) same (fuel near3 solenoid))	US-PGPUB; USPAT; USOCR; FPRS; EPO; JPO; DERWENT	OR	ON	2021/06/17 17:10
S183	58	generator and ((solenoid near3 switch) same (fuel near3 solenoid) same closed)	US-PGPUB; USPAT; USOCR; FPRS; EPO;	OR	ON	2021/06/17 17:23

			JPO; DERWENT			
S184	2	engine and ((solenoid near3 switch) same (fuel near3 solenoid) same closed same (first near3 mode))	US-PGPUB; USPAT; USOCR; FPRS; EPO; JPO; DERWENT	OR	ON	2021/06/17 17:27
S185	2	engine and (((fuel near3 solenoid near3 switch) near5 closed) same (first near3 mode))	US-PGPUB; USPAT; USOCR; FPRS; EPO; JPO; DERWENT	OR	ON	2021/06/17 17:28
S186	2	engine and (((fuel near3 solenoid near3 switch) near5 closed) same (selector near3 switch))	US-PGPUB; USPAT; USOCR; FPRS; EPO; JPO; DERWENT	OR	ON	2021/06/17 17:29
S187	2	engine and (((fuel near3 solenoid near3 switch) near5 closed) same (mode))	US-PGPUB; USPAT; USOCR; FPRS; EPO; JPO; DERWENT	OR	ON	2021/06/17 17:29
S188	24	engine and (((fuel near3 solenoid near3 switch) near5 closed))	US-PGPUB; USPAT; USOCR; FPRS; EPO; JPO; DERWENT	OR	ON	2021/06/17 17:29
S189	9	engine and (((solenoid near3 switch) near5 closed) same (fuel near3 solenoid) same (operator or manual))	US-PGPUB; USPAT; USOCR; FPRS; EPO; JPO; DERWENT	OR	ON	2021/06/17 18:16
S190	9	engine and (((solenoid near3 switch) near5 closed) same (fuel near3 solenoid) same (operator or manual or user))	US-PGPUB; USPAT; USOCR; FPRS; EPO; JPO; DERWENT	OR	ON	2021/06/17 18:16
S191	9	engine and (((solenoid near3 switch) near5 closed) same (fuel near3 solenoid) same (operator or manual or user))	US-PGPUB; USPAT; USOCR; FPRS; EPO;	OR	ON	2021/06/17 18:23

			JPO; DERWENT			
S192	147	(engine or generator) and ((solenoid near3 switch) same ((second$4 or dual) near3 fuel))	US-PGPUB; USPAT; USOCR; FPRS; EPO; JPO; DERWENT	OR	ON	2021/06/17 18:26
S193	23	(engine or generator) and ((solenoid adj switch) same ((second$4 or dual) near3 fuel))	US-PGPUB; USPAT; USOCR; FPRS; EPO; JPO; DERWENT	OR	ON	2021/06/17 18:27
S194	26	(engine or generator) and ((fuel near3 solenoid near3 switch) same ((second$4 or dual) near3 fuel))	US-PGPUB; USPAT; USOCR; FPRS; EPO; JPO; DERWENT	OR	ON	2021/06/17 18:33
S195	0	((fuel near3 solenoid near3 switch) same operator same ((second$4 or dual) near3 fuel))	US-PGPUB; USPAT; USOCR; FPRS; EPO; JPO; DERWENT	OR	ON	2021/06/17 18:36
S196	0	((fuel near3 solenoid near3 switch) same user same ((second$4 or dual) near3 fuel))	US-PGPUB; USPAT; USOCR; FPRS; EPO; JPO; DERWENT	OR	ON	2021/06/17 18:37
S197	48	(engine or generator) and ((fuel near3 (cut$4 or cut-off or stop) near3 switch) same ((second$4 or dual) near3 fuel))	US-PGPUB; USPAT; USOCR; FPRS; EPO; JPO; DERWENT	OR	ON	2021/06/17 18:37
S198	612	generator and ((fuel near3 solenoid) same (switch))	US-PGPUB; USPAT; USOCR; FPRS; EPO; JPO; DERWENT	OR	ON	2021/12/14 14:44
S199	164	generator and ((fuel near3 solenoid) near5 (switch))	US-PGPUB; USPAT; USOCR; FPRS; EPO;	OR	ON	2021/12/14 14:44

			JPO; DERWENT			
S200	31	generator and ((fuel adj solenoid) near5 (switch))	US-PGPUB; USPAT; USOCR; FPRS; EPO; JPO; DERWENT	OR	ON	2021/12/14 14:44

12/14/2021 7:14:57 PM
C:\Users\shasan2\Documents\EAST\Custom Office Templates\EAST\Workspaces\Dual Fuel Selector Switch 14069747.wsp

Application Number	Application/Control No.	Applicant(s)/Patent under Reexamination	
* 16/789,722 *	16/789,722	Sarder et al.	
	Examiner	Art Unit	
	HASAN, SYED O	3747	

Document Code - DISQ	Internal Document - DO NOT MAIL

TERMINAL DISCLAIMER	☑ APPROVED	☐ DISAPPROVED
Date Filed: 24 September 2021	This patent is subject to a Terminal Disclaimer	

Approved/Disapproved by:

/PAMELA A YOUNG/

Technology Center: OPLC

Telephone: (571)272-3622

_____

PTO/SB/06 (09-11)
Approved for use through 1/31/2014. OMB 0651-0032
U.S. Patent and Trademark Office; U.S. DEPARTMENT OF COMMERCE
Under the Paperwork Reduction Act of 1995, no persons are required to respond to a collection of information unless it displays a valid OMB control number.

PATENT APPLICATION FEE DETERMINATION RECORD Substitute for Form PTO-875	Application or Docket Number 16/789,722	Filing Date 02/13/2020	☐ To be Mailed

ENTITY: ☐ LARGE ☑ SMALL ☐ MICRO

APPLICATION AS FILED - PART I

FOR	(Column 1) NUMBER FILED	(Column 2) NUMBER EXTRA		RATE ($)	FEE ($)
☐ BASIC FEE (37 CFR 1.16(a), (b), or (c))	N/A	N/A		N/A	
☐ SEARCH FEE (37 CFR 1.16(k), (i), or (m))	N/A	N/A		N/A	
☐ EXAMINATION FEE (37 CFR 1.16(o), (p), or (q))	N/A	N/A		N/A	
TOTAL CLAIMS (37 CFR 1.16(i))	minus 20 =	*		x $50 =	
INDEPENDENT CLAIMS (37 CFR 1.16(h))	minus 3 =	*		x $230 =	
☐ APPLICATION SIZE FEE (37 CFR 1.16(s))	If the specification and drawings exceed 100 sheets of paper, the application size fee due is $310 ($155 for small entity) for each additional 50 sheets or fraction thereof. See 35 U.S.C. 41(a)(1)(G) and 37 CFR 1.16(s).				
☐ MULTIPLE DEPENDENT CLAIM PRESENT (37 CFR 1.16(j))					
* If the difference in column 1 is less than zero, enter "0" in column 2.				TOTAL	

APPLICATION AS AMENDED - PART II

AMENDMENT	09/24/2021	(Column 1) CLAIMS REMAINING AFTER AMENDMENT		(Column 2) HIGHEST NUMBER PREVIOUSLY PAID FOR	(Column 3) PRESENT EXTRA		RATE ($)	ADDITIONAL FEE ($)
	Total (37 CFR 1.16(i))	* 19	Minus	** 20	= 0		x $50 =	0
	Independent (37 CFR 1.16(h))	* 2	Minus	*** 3	= 0		x $240 =	0
	☐ Application Size Fee (37 CFR 1.16(s))							
	☐ FIRST PRESENTATION OF MULTIPLE DEPENDENT CLAIM (37 CFR 1.16(j))							
							TOTAL ADD'L FEE	0

AMENDMENT		(Column 1) CLAIMS REMAINING AFTER AMENDMENT		(Column 2) HIGHEST NUMBER PREVIOUSLY PAID FOR	(Column 3) PRESENT EXTRA		RATE ($)	ADDITIONAL FEE ($)
	Total (37 CFR 1.16(i))	*	Minus	**	=		x $0 =	
	Independent (37 CFR 1.16(h))	*	Minus	***	=		x $0 =	
	☐ Application Size Fee (37 CFR 1.16(s))							
	☐ FIRST PRESENTATION OF MULTIPLE DEPENDENT CLAIM (37 CFR 1.16(j))							
							TOTAL ADD'L FEE	

* If the entry in column 1 is less than the entry in column 2, write "0" in column 3.	LIE
** If the "Highest Number Previously Paid For" IN THIS SPACE is less than 20, enter "20".	/TAMARA D HARRELL/
*** If the "Highest Number Previously Paid For" IN THIS SPACE is less than 3, enter "3".	
The "Highest Number Previously Paid For" (Total or Independent) is the highest number found in the appropriate box in column 1.	

This collection of information is required by 37 CFR 1.16. The information is required to obtain or retain a benefit by the public which is to file (and by the USPTO to process) an application. Confidentiality is governed by 35 U.S.C. 122 and 37 CFR 1.14. This collection is estimated to take 12 minutes to complete, including gathering, preparing, and submitting the completed application form to the USPTO. Time will vary depending upon the individual case. Any comments on the amount of time you require to complete this form and/or suggestions for reducing this burden, should be sent to the Chief Information Officer, U.S. Patent and Trademark Office, U.S. Department of Commerce, P.O. Box 1450, Alexandria, VA 22313-1450. DO NOT SEND FEES OR COMPLETED FORMS TO THIS ADDRESS. **SEND TO: Commissioner for Patents, P.O. Box 1450, Alexandria, VA 22313-1450.**

If you need assistance in completing the form, call 1-800-PTO-9199 and select option 2.

PTO/AIA/26 (04-14)
Approved for use through 11/30/2020. OMB 0651-0031
U.S. Patent and Trademark Office; U.S. DEPARTMENT OF COMMERCE
Under the Paperwork Reduction Act of 1995, no persons are required to respond to a collection of information unless it displays a valid OMB control number.

TERMINAL DISCLAIMER TO OBVIATE A DOUBLE PATENTING REJECTION OVER A "PRIOR" PATENT

Docket Number (Optional)
CET1090.075

In re Application of: Sarder et al.

Application No.: 16/789,722

Filed: 2/13/2020

For: DUAL FUEL SELECTOR SWITCH

The applicant, Champion Power Equipment, Inc., owner of 100 percent interest in the instant application hereby disclaims, except as provided below, the terminal part of the statutory term of any patent granted on the instant application which would extend beyond the expiration date of the full statutory term of **prior patent** No. 10,598,101 as the term of said **prior patent** is presently shortened by any terminal disclaimer. The applicant hereby agrees that any patent so granted on the instant application shall be enforceable only for and during such period that it and the **prior patent** are commonly owned. This agreement runs with any patent granted on the instant application and is binding upon the grantee, its successors or assigns.

In making the above disclaimer, the applicant does not disclaim the terminal part of the term of any patent granted on the instant application that would extend to the expiration date of the full statutory term of the **prior patent**, "as the term of said **prior patent** is presently shortened by any terminal disclaimer," in the event that said **prior patent** later:

expires for failure to pay a maintenance fee;
is held unenforceable;
is found invalid by a court of competent jurisdiction;
is statutorily disclaimed in whole or terminally disclaimed under 37 CFR 1.321;
has all claims canceled by a reexamination certificate;
is reissued; or
is in any manner terminated prior to the expiration of its full statutory term as presently shortened by any terminal disclaimer.

Check either box 1 or 2 below, if appropriate.

1. ☐ The undersigned is the applicant. If the applicant is an assignee, the undersigned is authorized to act on behalf of the assignee.

I hereby acknowledge that any willful false statements made are punishable under 18 U.S.C. 1001 by fine or imprisonment of not more than five (5) years, or both.

2. ☑ The undersigned is an attorney or agent of record. Reg. No. 65742

/Andrew C. Stark/	September 24, 2021
Signature	Date
Andrew C. Stark	
Typed or printed name	
Patent Attorney	(262) 268-8100
Title	Telephone Number

☑ Terminal disclaimer fee under 37 CFR 1.20(d) included.

WARNING: Information on this form may become public. Credit card information should not be included on this form. Provide credit card information and authorization on PTO-2038.

This collection of information is required by 37 CFR 1.321. The information is required to obtain or retain a benefit by the public which is to file (and by the USPTO to process) an application. Confidentiality is governed by 35 U.S.C. 122 and 37 CFR 1.11 and 1.14. This collection is estimated to take 12 minutes to complete, including gathering, preparing, and submitting the completed application form to the USPTO. Time will vary depending upon the individual case. Any comments on the amount of time you require to complete this form and/or suggestions for reducing this burden, should be sent to the Chief Information Officer, U.S. Patent and Trademark Office, U.S. Department of Commerce, P.O. Box 1450, Alexandria, VA 22313-1450. DO NOT SEND FEES OR COMPLETED FORMS TO THIS ADDRESS. **SEND TO: Commissioner for Patents, P.O. Box 1450, Alexandria, VA 22313-1450.**

If you need assistance in completing the form, call 1-800-PTO-9199 and select option 2.

Privacy Act Statement

The **Privacy Act of 1974 (P.L. 93-579)** requires that you be given certain information in connection with your submission of the attached form related to a patent application or patent. Accordingly, pursuant to the requirements of the Act, please be advised that: (1) the general authority for the collection of this information is 35 U.S.C. 2(b)(2); (2) furnishing of the information solicited is voluntary; and (3) the principal purpose for which the information is used by the U.S. Patent and Trademark Office is to process and/or examine your submission related to a patent application or patent. If you do not furnish the requested information, the U.S. Patent and Trademark Office may not be able to process and/or examine your submission, which may result in termination of proceedings or abandonment of the application or expiration of the patent.

The information provided by you in this form will be subject to the following routine uses:

1. The information on this form will be treated confidentially to the extent allowed under the Freedom of Information Act (5 U.S.C. 552) and the Privacy Act (5 U.S.C 552a). Records from this system of records may be disclosed to the Department of Justice to determine whether disclosure of these records is required by the Freedom of Information Act.
2. A record from this system of records may be disclosed, as a routine use, in the course of presenting evidence to a court, magistrate, or administrative tribunal, including disclosures to opposing counsel in the course of settlement negotiations.
3. A record in this system of records may be disclosed, as a routine use, to a Member of Congress submitting a request involving an individual, to whom the record pertains, when the individual has requested assistance from the Member with respect to the subject matter of the record.
4. A record in this system of records may be disclosed, as a routine use, to a contractor of the Agency having need for the information in order to perform a contract. Recipients of information shall be required to comply with the requirements of the Privacy Act of 1974, as amended, pursuant to 5 U.S.C. 552a(m).
5. A record related to an International Application filed under the Patent Cooperation Treaty in this system of records may be disclosed, as a routine use, to the International Bureau of the World Intellectual Property Organization, pursuant to the Patent Cooperation Treaty.
6. A record in this system of records may be disclosed, as a routine use, to another federal agency for purposes of National Security review (35 U.S.C. 181) and for review pursuant to the Atomic Energy Act (42 U.S.C. 218(c)).
7. A record from this system of records may be disclosed, as a routine use, to the Administrator, General Services, or his/her designee, during an inspection of records conducted by GSA as part of that agency's responsibility to recommend improvements in records management practices and programs, under authority of 44 U.S.C. 2904 and 2906. Such disclosure shall be made in accordance with the GSA regulations governing inspection of records for this purpose, and any other relevant (*i.e.*, GSA or Commerce) directive. Such disclosure shall not be used to make determinations about individuals.
8. A record from this system of records may be disclosed, as a routine use, to the public after either publication of the application pursuant to 35 U.S.C. 122(b) or issuance of a patent pursuant to 35 U.S.C. 151. Further, a record may be disclosed, subject to the limitations of 37 CFR 1.14, as a routine use, to the public if the record was filed in an application which became abandoned or in which the proceedings were terminated and which application is referenced by either a published application, an application open to public inspection or an issued patent.
9. A record from this system of records may be disclosed, as a routine use, to a Federal, State, or local law enforcement agency, if the USPTO becomes aware of a violation or potential violation of law or regulation.

UNITED STATES
PATENT AND TRADEMARK OFFICE

P.O. Box 1450
Alexandria, VA 22313 - 1450
www.uspto.gov

ELECTRONIC ACKNOWLEDGEMENT RECEIPT

APPLICATION #	RECEIPT DATE / TIME	ATTORNEY DOCKET #
16/789,722	**09/24/2021 11:05:39 AM ET**	**CET1090.075**

Title of Invention

DUAL FUEL SELECTOR SWITCH

Application Information

APPLICATION TYPE	Utility - Nonprovisional Application under 35 USC 111(a)	PATENT #	-
CONFIRMATION #	9989	FILED BY	Robyn Templin
PATENT CENTER #	60326708	FILING DATE	02/13/2020
CUSTOMER #	26629	FIRST NAMED INVENTOR	Mark J. Sarder
CORRESPONDENCE ADDRESS	-	AUTHORIZED BY	Andrew Stark

Documents

TOTAL DOCUMENTS: 4

DOCUMENT		PAGES	DESCRIPTION	SIZE (KB)
2021.09.24 Response.pdf		10	-	164 KB
2021.09.24 Response-A....pdf	(1-1)	1	Amendment/Req. Reconsideration-After Non-Final Reject	115 KB
2021.09.24 Response-CLM.pdf	(2-4)	3	Claims	88 KB
2021.09.24 Response-REM.pdf	(5-10)	6	Applicant Arguments/Remarks Made in an Amendment	124 KB
2021.09.24 Terminal Disclaimer.pdf		2	Terminal Disclaimer Filed	150 KB

Digest

DOCUMENT	MESSAGE DIGEST(SHA-512)
2021.09.24 Response.pdf	3934313EF396EC5B8D43F19176DFDB11C67975D3B7AA6A0B7358C9F73021DDD3EC56BD4535C4D7BB983250A296ED1BC967D7752D071F5CD88DB2AC58C1D21820
2021.09.24 Response-A....pdf	01BDB358E5F0216DC2927A6DE133D644DFDC8B7607EA27771B5BC96E86A9A5338FF964C2DCBCF4333720DBCD9D1AFB6448A206DC4A85881D7E499A26ACD0EE05
2021.09.24 Response-CLM.pdf	E39AB8E786709B44CA9F6A4532264553B7462EB9B5351E4095EE330DD3AB4C27BF4C03A9FCE9C6E2F9A3739D0A73DF3916293475D345D79EF2DB0E6E3332D5E8
2021.09.24 Response-REM.pdf	749180317C6FCB51A18289703D30D7367D10B3F0854DB22714C233D138955CD34AD6CB3AD2D234403C3B2E078ADB97A9A75B0CBF8DA4F4B82B4C8F34EC20D45E
2021.09.24 Terminal Disclaimer.pdf	B37F8D1FB2987081C0C8554348FE8DD598D1896F330F98EAFE12FADAE47973202B802A0CCFFCDF2835B99B97DF810FAD17B844044A83E8FC872A1FEE48774C97

This Acknowledgement Receipt evidences receipt on the noted date by the USPTO of the indicated documents, characterized by the applicant, and including page counts, where applicable. It serves as evidence of receipt similar to a Post Card, as described in MPEP 503.

New Applications Under 35 U.S.C. 111

If a new application is being filed and the application includes the necessary components for filing date (see 37 CFR 1.53(b)-(d) and MPEP 506), a Filing Receipt (37 CFR 1.54) will be issued in due course and the date shown on this Acknowledgement Receipt will establish the filing date of the application

National Stage of an International Application under 35 U.S.C. 371

If a timely submission to enter the national stage of an international application is compliant with the conditions of 35 U.S.C. 371 and other applicable requirements a Form PCT/DO/EO/903 indicating acceptance of the application as a national stage submission under 35 U.S.C. 371 will be issued in addition to the Filing Receipt, in due course.

New International Application Filed with the USPTO as a Receiving Office

If a new international application is being filed and the international application includes the necessary components for an international filing date (see PCT Article 11 and MPEP 1810), a Notification of the International Application Number and of the International Filing Date (Form PCT/RO/105) will be issued in due course, subject to prescriptions concerning national security, and the date shown on this Acknowledgement Receipt will establish the international filing date of the application.

UNITED STATES
PATENT AND TRADEMARK OFFICE

P.O. Box 1450
Alexandria, VA 22313 - 1450
www.uspto.gov

ELECTRONIC PAYMENT RECEIPT

APPLICATION #	RECEIPT DATE / TIME	ATTORNEY DOCKET #
16/789,722	09/24/2021 11:05:39 AM ET	CET1090.075

Title of Invention

DUAL FUEL SELECTOR SWITCH

Application Information

APPLICATION TYPE	Utility - Nonprovisional Application under 35 USC 111(a)	PATENT #	-
CONFIRMATION #	9989	FILED BY	Robyn Templin
PATENT CENTER #	60326708	AUTHORIZED BY	Andrew Stark
CUSTOMER #	26629	FILING DATE	02/13/2020
CORRESPONDENCE ADDRESS	-	FIRST NAMED INVENTOR	Mark J. Sarder

Payment Information

PAYMENT METHOD	PAYMENT TRANSACTION ID	PAYMENT AUTHORIZED BY
CARD / 4529	E20219NB06461952	Robyn Templin

FEE CODE	DESCRIPTION	ITEM PRICE($)	QUANTITY	ITEM TOTAL($)
2814	STATUTORY DISCLAIMER, INCLUDING TERMINAL DISCLAIMER	170.00	1	170.00
			TOTAL AMOUNT:	$170.00

This Acknowledgement Receipt evidences receipt on the noted date by the USPTO of the indicated documents, characterized by the applicant, and including page counts, where applicable. It serves as evidence of receipt similar to a Post Card, as described in MPEP 503.

New Applications Under 35 U.S.C. 111

If a new application is being filed and the application includes the necessary components for filing date (see 37 CFR 1.53(b)-(d) and MPEP 506), a Filing Receipt (37 CFR 1.54) will be issued in due course and the date shown on this Acknowledgement Receipt will establish the filing date of the application

National Stage of an International Application under 35 U.S.C. 371

If a timely submission to enter the national stage of an international application is compliant with the conditions of 35 U.S.C. 371 and other applicable requirements a Form PCT/DO/EO/903 indicating acceptance of the application as a national stage submission under 35 U.S.C. 371 will be issued in addition to the Filing Receipt, in due course.

New International Application Filed with the USPTO as a Receiving Office

If a new international application is being filed and the international application includes the necessary components for an international filing date (see PCT Article 11 and MPEP 1810), a Notification of the International Application Number and of the International Filing Date (Form PCT/RO/105) will be issued in due course, subject to prescriptions concerning national security, and the date shown on this Acknowledgement Receipt will establish the international filing date of the application.

Customer No. 26629
Confirmation No. 9989

Patent
Attorney Docket No. CET1090.075

IN THE UNITED STATES PATENT AND TRADEMARK OFFICE

In re Application of	:	Sarder et al.
Serial No.	:	16/789,722
Filed	:	February 13, 2020
For	:	DUAL FUEL SELECTOR SWITCH
Group Art No.	:	3747
Examiner	:	Syed O. Hasan

CERTIFICATION UNDER 37 CFR 1.8(a) and 1.10

I hereby certify that, on the date shown below, this correspondence is being:

Mailing

□ deposited with the US Postal Service in an envelope addressed to Commissioner for Patents, P.O. Box 1450, Alexandria, VA 22313-1450

37 CFR 1.8(a) **37 CFR 1.10**

□ with sufficient postage as first class mail □ As "Express Mail Post Office to Addressee" Mailing Label No.

Transmission

□ transmitted by facsimile to Fax No.: 571-273-8300 addressed to **Examiner Syed O. Hasan** at the Patent and Trademark Office.

■ transmitted by EFS-WEB addressed to **Examiner Syed O. Hasan** at the Patent and Trademark Office.

Date: September 24, 2021 /Robyn L. Templin/
Signature

Commissioner for Patents
P.O. Box 1450
Alexandria, VA 22313-1450

AMENDMENT/RESPONSE TO OFFICE ACTION
MAILED JUNE 24, 2021

Dear Sir:

Responsive to the Office Action mailed June 24, 2021, please amend the Application as follows and consider the following remarks:

In the Claims

1. (Original) A fuel selector for use with a dual fuel generator, the fuel selector comprising:

a valve assembly fluidly connected to each of a first fuel source and a second fuel source, the valve assembly being operable to selectively control a first fuel flow and a second fuel flow from the first fuel source and the second fuel source, respectively, to an engine of the dual fuel generator; and

a selector switch positioned on the valve assembly to allow a user to manually select one of the first fuel flow and the second fuel flow;

wherein the valve assembly comprises:

two fuel inputs, with a first fuel input connected to the first fuel source and a second fuel input connected to the second fuel source; and

two fuel outputs for selectively supplying fuel to the engine from the first fuel source or the second fuel source.

2. (Original) The fuel selector of claim 1 wherein the two fuel outputs selectively supply fuel to the engine from only one of the first fuel source or the second fuel source, responsive to selection of the first fuel flow or the second fuel flow via the selector switch, and a corresponding operation of the valve assembly.

3. (Original) The fuel selector of claim 1 wherein the valve assembly comprises:

a first fuel valve having open and closed positions to selectively control the first fuel flow to the engine; and

a second fuel valve having open and closed positions to selectively control the second fuel flow to the engine.

4. (Original) The fuel selector of claim 3 wherein the first fuel valve and the second fuel valve are non-solenoid, mechanical valves.

5. (Previously Presented) The fuel selector of claim 3 wherein the selector switch provides for manual actuation of the first fuel valve and the second fuel valve between the open and closed positions.

Champion - EX2109, Page 95 of 403
Generac Power Systems, Inc. et al v. Champion Power Equip., Inc.
IPR2025-01438

6. (Original) The fuel selector of claim 1 further comprising a carburetor solenoid switch configured to activate an associated carburetor solenoid when actuated.

7. (Original) The fuel selector of claim 6 wherein, when the selector switch is in a first position, the selector switch actuates the carburetor solenoid switch, so as to activate the carburetor solenoid and stop the second fuel flow to the engine.

8. (Previously Presented) The fuel selector of claim 7 wherein, when the selector switch is in a second position, the carburetor solenoid allows the second fuel flow to the engine.

9. (Original) The fuel selector of claim 1 wherein the first fuel source is a liquefied petroleum gas (LPG) fuel source and wherein the second fuel source is a gasoline source.

10. (Currently Amended) A fuel selector of a dual fuel generator comprising:

a selector switch having a first fuel mode and a second fuel mode;

a fuel solenoid having open and closed positions; and

a solenoid switch having open and closed positions to activate and deactivate the fuel solenoid; ~~and~~

~~a fuel solenoid having open and closed positions;~~

wherein, when the selector switch is in the first fuel mode, the solenoid switch and the fuel solenoid are in the closed positions and, when the selector switch is in the second fuel mode, the solenoid switch and the fuel solenoid are in the open positions.

11. (Original) The fuel selector of claim 10 wherein the selector switch triggers the solenoid switch when changed from the second fuel mode to the first fuel mode, so as to cause the solenoid switch and the fuel solenoid to operate in the closed positions.

12. (Original) The fuel selector of claim 10 further comprising:

a valve assembly fluidly connected to each of a first fuel source and a second fuel source, the valve assembly being operable to selectively control a first fuel flow and a second fuel flow from the first fuel source and the second fuel source, respectively, to an engine of the dual fuel generator; and

wherein positioning of the selector switch in the first fuel mode and the second fuel mode enables a selection of one of the first fuel flow and the second fuel flow.

13. (Original) The fuel selector of claim 12 wherein the valve assembly is positioned on or adjacent the selector switch.

14. (Original) The fuel selector of claim 12 wherein the valve assembly comprises:

two fuel inputs, with a first fuel input connected to the first fuel source and a second fuel input connected to the second fuel source; and

two fuel outputs for selectively supplying fuel to the engine from the first fuel source or the second fuel source.

15. (Original) The fuel selector of claim 14 wherein the two fuel outputs selectively supply fuel to the engine from only one of the first fuel source or the second fuel source, responsive to selection of the first fuel flow or the second fuel flow via the selector switch and a corresponding operation of the valve assembly.

16. (Original) The fuel selector of claim 14 wherein the valve assembly comprises:

a first fuel valve having open and closed positions to selectively control the first fuel flow to the engine; and

a second fuel valve having open and closed positions to selectively control the second fuel flow to the engine.

17. (Original) The fuel selector of claim 12 wherein the first fuel source is a liquefied petroleum gas (LPG) fuel source and wherein the second fuel source is a gasoline source.

18. (New) The fuel selector of claim 10 wherein the fuel solenoid is a carburetor shutoff solenoid.

19. (New) The fuel selector of claim 10 wherein positioning the selector switch in the first fuel mode enables the selection of a first fuel source to the generator, and positioning the selector switch in the second fuel mode enables the selection of a second fuel source to the generator.

REMARKS

Claims 1-17 are pending in the present application. In the Office Action mailed June 24, 2021, the Examiner rejected claims 1-17 on the ground of nonstatutory double patenting as being unpatentable over claims 1, 2, 8, 17, 18, and 19 of U.S. Patent No. 10,598,101. The Examiner next rejected claims 10 and 11 under 35 U.S.C. §102(a)(1) as being anticipated by Sugimoto et al. (US Pub. 2007/0137591).

Claims 1-9 and 12-17 were indicated as containing allowable subject matter. Such indication is appreciated.

Non-Statutory Double Patenting Rejection

The Examiner rejected claims 1-17 on the ground of non-statutory double patenting as being unpatentable over claims 1-2, 8, 17, 18, and 19 of U.S. Patent 10,598,101.

Responsive to the rejection, a properly executed Terminal Disclaimer is being filed concurrently herewith to obviate the non-statutory double patenting rejection(s). The $170 Terminal Disclaimer fee under 37 CFR 120(d) is also being concurrently paid via EFS-WEB. As such, Applicant respectfully requests withdrawal of the double patenting rejection of claims 1-17 on the ground of non-statutory double patenting as being unpatentable over claims 1-2, 8, 17, 18, and 19 of U.S. Patent 10,598,101.

Rejection under 35 U.S.C. §102(a)(1) as being anticipated by Sugimoto et al.

Claim 10

The Examiner rejected claim 10 under 35 U.S.C. §102(a)(1) as being anticipated by Sugimoto et al. (US Pub. 2007/0137591) – hereinafter "Sugimoto". In rejecting the claim, the Examiner asserted (in part) that Sugimoto discloses "a selector switch (12) having a first fuel mode (cutoff mode shown in figure 7) and a second fuel mode (first position fuel bottle mode shown in figure 7)," a "solenoid switch (kill switch 74)," and a "fuel solenoid having open and closed positions (kill switch associated with fuel so 74 controls a fuel solenoid)." *Office Action*, 06/24/2021, p. 5. Without acquiescing to the rejection, Applicant has elected to amend claim 10 to further clarify the invention.

As amended, claim 10 calls for, a fuel selector of a dual fuel generator including a selector switch having a first fuel mode and a second fuel mode; a fuel solenoid having open and closed positions; and a solenoid switch having open and closed positions to activate and deactivate the fuel solenoid; wherein, when the selector switch is in the first fuel mode, the solenoid switch and

the fuel solenoid are in the closed positions and, when the selector switch is in the second fuel mode, the solenoid switch and the fuel solenoid are in the open positions.

Applicant believes claim 10 to be patentably distinct from that which is disclosed in Sugimoto. That is, Sugimoto does not anticipate that which is called for in claim 10, as anticipation under 35 U.S.C. §102(a)(1) requires that "[t]he identical invention must be shown [in the reference] in as complete detail as is contained in the ... claim." *MPEP §2131* (citing *Richardson v. Suzuki Motor Co.,* 868 F.2d 1226, 1236 (Fed. Cir. 1989)). As will be set forth in detail here below, Sugimoto does not disclose each and every element of claim 10 and thus does not anticipate the claim as "[a] claim is anticipated only if each and every element as set forth in the claim is found, either expressly or inherently described, in a single prior art reference." *MPEP §2131* (citing *Verdegaal Bros. v. Union Oil Co. of California*, 814 F.2d 628, 631 (Fed. Cir. 1987)).

Sugimoto discloses an engine generator 1 that includes a combustion engine 30, a fuel supply system Fa for supplying a fuel gas to the engine 30, an electric generator 40 to be driven for operation by the engine 30, a power control unit 41 for controlling power generated by the generator 40, and an electronic control unit (ECU) 89 for controlling the engine 30 and the fuel supply system Fa. *Sugimoto*, ¶[0042]. The fuel supply system Fa is provided with one or a plurality of fuel bottles 61, namely, first fuel or internal fuel sources. *Id.* at ¶[0071]. An external fuel system Fb includes an external fuel bottle 71, namely, a second fuel or an external fuel source. *Id.* at ¶[0073]. A fuel system selector valve 12 connects either a first fuel system that supplies the first fuel gas to the engine 30 or a second fuel system that supplies the second gas to the engine 30. *Id.* at ¶[0082]. The fuel system selector valve 12 can be set in a first position, where the knob of the fuel system selector valve 12 is at a first position marked with "Internal fuel" to connect the first fuel system to the engine 30 to supply the first fuel gas to the engine 30, in a second position, where the knob of the fuel system selector valve 12 is at a second position marked with "External fuel" to connect the second fuel system to the engine 30 to supply the second fuel gas to the engine 30, and in a cutoff position, where the knob of the fuel system selector valve 12 is at a cutoff position, where the knob of the fuel system selector valve 12 is at a neutral position marked with "Off" to stop supplying fuel gas to the engine 30 by disconnecting both the first and the second fuel system from the engine 30. *Id.* at ¶[0082]. The fuel system selector valve 12 is changed from the first to the second position and from the second to the first position via the neutral position. *Id.* at ¶[0082]. Sugimoto additionally discloses that the fuel system selector valve 12 functions as switches for starting and stopping the engine 30 and controlling the ignition system – with a kill switch 74 for controlling

the operation of the ignition system being opened and closed according to the operating position of the fuel system selector valve 12. *Id*. at ¶[0083].

However, there is no disclosure in Sugimoto of a fuel solenoid having open and closed positions, and a solenoid switch having open and closed positions to activate and deactivate the fuel solenoid, along with the additional elements of claim 10. Contrary to the Examiner's assertion on page 5 of the Office Action, Sugimoto does not disclose a fuel solenoid controlled by kill switch 74. Sugimoto actually discloses a kill switch 74 that is opened and closed to control operation of an ignition system of the engine 30. *Sugimoto*, ¶[0083]. That is, FIG. 6 shows the kill switch 74 wired to operate an ignition coil 44 of the ignition system. *Id*. at ¶[0065]; FIG. 6. In contrast, a skilled artisan would readily recognize that a "solenoid" is "a coil of wire usually in cylindrical form that when carrying a current acts like a magnet so that a movable core is drawn into the coil when a current flows and that is used especially as a switch or control for a mechanical device (such as a valve)."[1] This definition is consistent with the use of the term "solenoid" a disclosed in the specification, with the specification disclosing that "[w]hen solenoid switch 32 is triggered, a carburetor shutoff solenoid operatively connected to the solenoid switch 32 is activated and shuts off the flow of gasoline to the carburetor 16." *Specification*, ¶[0032]. However, Sugimoto's ignition coil 44 does not have a movable core of a solenoid as instead Sugimoto discloses that the "ignition coil 44 (FIG. 6) provided with a primary winding" and that the "ignition coil 44 raises an input voltage up to a high voltage and applies a high-voltage pulse to the ignition plug 42 in response to an ignition signal provided at a specific crankshaft position." *Sugimoto*, ¶ [0065]. Thus, one skilled in the art would readily recognize that an ignition coil, like ignition coil 44, is a transformer having two wire windings or coils used to generate high-voltage spark pulses and that such an ignition coil would not have a movable core like a solenoid. Since the ignition coil 44 is not a solenoid, therefore, the kill switch 74 does not control a solenoid and is not a solenoid switch. As a result, Sugimoto cannot be said to teach or suggest a solenoid switch having open and closed positions to activate and deactivate a fuel solenoid; wherein, when a selector switch is in a first fuel mode, the solenoid switch and the fuel solenoid are in closed positions and, when the selector switch is in a second fuel mode, the solenoid switch and the fuel solenoid are in open positions; as called for in claim 10.

[1] *See Merriam-Webster Online Dictionary*, https://www.merriam-webster.com/dictionary/solenoid

For at least these reasons, Sugimoto fails to teach each and every element of claim 10 and thus fails to anticipate the claim, as "[a] claim is anticipated only if each and every element as set forth in the claim is found, either expressly or inherently described, in a single prior art reference." *MPEP §2131* (citing *Verdegaal Bros. v. Union Oil Co. of California*, 814 F.2d 628, 631 (Fed. Cir. 1987)). Applicant therefore believes that claim 10 is patentably distinct from Sugimoto and respectfully requests withdrawal of the rejection of claim 10 and the claims dependent therefrom.

Newly Added Claims

In addition to the above remarks, Applicant has newly presented claims 18 and 19 in the present response. No new matter is included by way of the newly presented claims. Support for new claim 18 can be found at least in paragraph [0032] of the Specification and in FIGS. 2 and 6 of the Drawings. Support for new claim 19 can be found at least in paragraphs [0020]-[0021], [0028], and [0030] of the Specification and in FIGS. 2, and 5-6.

Claim 18 is believed to be patentably distinct over the applied art as Sugimoto cannot be said to teach or suggest wherein a fuel solenoid is a carburetor shutoff solenoid along with the additional elements of claim 18 by dependency on claim 10.

Claim 19 is believed to be patentably distinct over the applied art as Sugimoto cannot be said to teach or suggest wherein positioning a selector switch in a first fuel mode enables the selection of a first fuel source to a generator, and positioning the selector switch in a second fuel mode enables the selection of a second fuel source to the generator along with the additional elements of claim 19 by dependency on claim 10.

Conclusion

Therefore, in light of at least the foregoing, Applicant respectfully believes that the present application is in condition for allowance. As a result, Applicant respectfully requests timely issuance of a Notice of Allowance for claims 1-19.

No fees are deemed necessary for the claims newly presented herein, as the total number of independent claims is less than 3 and the total number of claims is less than 20.

Champion - EX2109, Page 101 of 403
Generac Power Systems, Inc. et al v. Champion Power Equip., Inc.
IPR2025-01438

Applicant appreciates the Examiner's consideration of these Amendments and Remarks and cordially invites the Examiner to call the undersigned, should the Examiner consider any matters unresolved.

Respectfully submitted,

/Andrew C. Stark/

Andrew C. Stark
Registration No. 65,742
Phone 262-268-8100
acs@zpspatents.com

Dated: September 24, 2021
Attorney Docket No.: CET1090.075

P.O. ADDRESS:
Ziolkowski Patent Solutions Group, SC
136 South Wisconsin Street
Port Washington, WI 53074
262-268-8100

Champion - EX2109, Page 102 of 403
Generac Power Systems, Inc. et al v. Champion Power Equip., Inc.
IPR2025-01438

General Authorization and Extension of Time

The Commissioner is hereby authorized to charge any additional fees which may be required regarding this application under 37 C.F.R. §§1.16-1.17, or credit any overpayment, to Deposit Account No. 50-2623. Should no proper payment be enclosed herewith, as by credit card authorization being in the wrong amount, unsigned, post-dated, otherwise improper or informal or even entirely missing, the Commissioner is authorized to charge the unpaid amount to Deposit Account No. 50-2623. If any extensions of time are needed for timely acceptance of papers submitted herewith, Applicant hereby petitions for such extensions under 37 C.F.R. §1.136 and authorizes payment of any such extensions fees to Deposit Account No. 50-2623. Please consider this a general authorization to charge any fee that is due in this case, if not otherwise timely paid, to Deposit Account No. 50-2623.

/Andrew C. Stark/
Andrew C. Stark
Registration No. 65,742
Phone 262-268-8100
acs@zpspatents.com

Dated: September 24, 2021
Attorney Docket No.: CET1090.075

P.O. ADDRESS:
Ziolkowski Patent Solutions Group, SC
136 South Wisconsin Street
Port Washington, WI 53074
262-268-8100

Champion - EX2109, Page 103 of 403
Generac Power Systems, Inc. et al v. Champion Power Equip., Inc.
IPR2025-01438

UNITED STATES PATENT AND TRADEMARK OFFICE

UNITED STATES DEPARTMENT OF COMMERCE
United States Patent and Trademark Office
Address: COMMISSIONER FOR PATENTS
P.O. Box 1450
Alexandria, Virginia 22313-1450
www.uspto.gov

APPLICATION NO.	FILING DATE	FIRST NAMED INVENTOR	ATTORNEY DOCKET NO.	CONFIRMATION NO.
16/789,722	02/13/2020	Mark J. Sarder	CET1090.075	9989

26629 7590 06/24/2021
ZIOLKOWSKI PATENT SOLUTIONS GROUP, SC (ZPS)
136 S WISCONSIN ST
PORT WASHINGTON, WI 53074

EXAMINER
HASAN, SYED O

ART UNIT	PAPER NUMBER
3747	

NOTIFICATION DATE	DELIVERY MODE
06/24/2021	ELECTRONIC

Please find below and/or attached an Office communication concerning this application or proceeding.

The time period for reply, if any, is set in the attached communication.

Notice of the Office communication was sent electronically on above-indicated "Notification Date" to the following e-mail address(es):

info@zpspatents.com
jmf@zpspatents.com

Office Action Summary	Application No. 16/789,722	Applicant(s) Sarder et al.	
	Examiner SYED O HASAN	Art Unit 3747	AIA (FITF) Status Yes

-- The MAILING DATE of this communication appears on the cover sheet with the correspondence address --

Period for Reply

A SHORTENED STATUTORY PERIOD FOR REPLY IS SET TO EXPIRE 3 MONTHS FROM THE MAILING DATE OF THIS COMMUNICATION.

- Extensions of time may be available under the provisions of 37 CFR 1.136(a). In no event, however, may a reply be timely filed after SIX (6) MONTHS from the mailing date of this communication.
- If NO period for reply is specified above, the maximum statutory period will apply and will expire SIX (6) MONTHS from the mailing date of this communication.
- Failure to reply within the set or extended period for reply will, by statute, cause the application to become ABANDONED (35 U.S.C. § 133). Any reply received by the Office later than three months after the mailing date of this communication, even if timely filed, may reduce any earned patent term adjustment. See 37 CFR 1.704(b).

Status

1)☑ Responsive to communication(s) filed on 6/11/2021.

☐ A declaration(s)/affidavit(s) under **37 CFR 1.130(b)** was/were filed on _____.

2a)☐ This action is **FINAL.** 2b) ☑ This action is non-final.

3)☐ An election was made by the applicant in response to a restriction requirement set forth during the interview on _____; the restriction requirement and election have been incorporated into this action.

4)☐ Since this application is in condition for allowance except for formal matters, prosecution as to the merits is closed in accordance with the practice under *Ex parte Quayle*, 1935 C.D. 11, 453 O.G. 213.

Disposition of Claims*

5) ☑ Claim(s) 1-17 is/are pending in the application.

5a) Of the above claim(s) _____ is/are withdrawn from consideration.

6) ☐ Claim(s) _____ is/are allowed.

7) ☑ Claim(s) 10-11 is/are rejected.

8) ☑ Claim(s) 1-9 and 12-17 is/are objected to.

9) ☐ Claim(s) _____ are subject to restriction and/or election requirement

* If any claims have been determined allowable, you may be eligible to benefit from the **Patent Prosecution Highway** program at a participating intellectual property office for the corresponding application. For more information, please see http://www.uspto.gov/patents/init_events/pph/index.jsp or send an inquiry to **PPHfeedback@uspto.gov.**

Application Papers

10)☐ The specification is objected to by the Examiner.

11)☑ The drawing(s) filed on 2/13/2020 is/are: a)☑ accepted or b)☐ objected to by the Examiner.

Applicant may not request that any objection to the drawing(s) be held in abeyance. See 37 CFR 1.85(a).

Replacement drawing sheet(s) including the correction is required if the drawing(s) is objected to. See 37 CFR 1.121(d).

Priority under 35 U.S.C. § 119

12)☐ Acknowledgment is made of a claim for foreign priority under 35 U.S.C. § 119(a)-(d) or (f).

Certified copies:

a)☐ All b)☐ Some** c)☐ None of the:

1.☐ Certified copies of the priority documents have been received.

2.☐ Certified copies of the priority documents have been received in Application No. _____.

3.☐ Copies of the certified copies of the priority documents have been received in this National Stage application from the International Bureau (PCT Rule 17.2(a)).

** See the attached detailed Office action for a list of the certified copies not received.

Attachment(s)

1) ☑ Notice of References Cited (PTO-892)

2) ☑ Information Disclosure Statement(s) (PTO/SB/08a and/or PTO/SB/08b) Paper No(s)/Mail Date _____.

3) ☐ Interview Summary (PTO-413) Paper No(s)/Mail Date _____.

4) ☐ Other: _____.

DETAILED ACTION

1. This action is in response to applicant's amendment received on 6/11/2021. Amended claims 8 is acknowledged and the following new grounds of rejection below are formulated.

Notice of Pre-AIA or AIA Status

2. The present application, filed on or after March 16, 2013, is being examined under the first inventor to file provisions of the AIA.

Double Patenting

3. Claims 1-17 of this application is patentably indistinct from claims 1-2, 8, 17, 18, and 19 of Application No. 15/015205. Pursuant to 37 CFR 1.78(f), when two or more applications filed by the same applicant or assignee contain patentably indistinct claims, elimination of such claims from all but one application may be required in the absence of good and sufficient reason for their retention during pendency in more than one application. Applicant is required to either cancel the patentably indistinct claims from all but one application or maintain a clear line of demarcation between the applications. See MPEP § 822.

4. The nonstatutory double patenting rejection is based on a judicially created doctrine grounded in public policy (a policy reflected in the statute) so as to prevent the unjustified or improper timewise extension of the “right to exclude” granted by a patent and to prevent possible harassment by multiple assignees. A nonstatutory double patenting rejection is appropriate where the conflicting claims are not identical, but at least one examined application claim is not patentably distinct from the reference claim(s) because the examined application claim is either anticipated by, or would have

been obvious over, the reference claim(s). See, e.g., *In re Berg*, 140 F.3d 1428, 46 USPQ2d 1226 (Fed. Cir. 1998); *In re Goodman*, 11 F.3d 1046, 29 USPQ2d 2010 (Fed. Cir. 1993); *In re Longi*, 759 F.2d 887, 225 USPQ 645 (Fed. Cir. 1985); *In re Van Ornum*, 686 F.2d 937, 214 USPQ 761 (CCPA 1982); *In re Vogel*, 422 F.2d 438, 164 USPQ 619 (CCPA 1970); *In re Thorington*, 418 F.2d 528, 163 USPQ 644 (CCPA 1969).

A timely filed terminal disclaimer in compliance with 37 CFR 1.321(c) or 1.321(d) may be used to overcome an actual or provisional rejection based on nonstatutory double patenting provided the reference application or patent either is shown to be commonly owned with the examined application, or claims an invention made as a result of activities undertaken within the scope of a joint research agreement. See MPEP § 717.02 for applications subject to examination under the first inventor to file provisions of the AIA as explained in MPEP § 2159. See MPEP § 2146 *et seq.* for applications not subject to examination under the first inventor to file provisions of the AIA. A terminal disclaimer must be signed in compliance with 37 CFR 1.321(b).

The USPTO Internet website contains terminal disclaimer forms which may be used. Please visit www.uspto.gov/patent/patents-forms. The filing date of the application in which the form is filed determines what form (e.g., PTO/SB/25, PTO/SB/26, PTO/AIA/25, or PTO/AIA/26) should be used. A web-based eTerminal Disclaimer may be filled out completely online using web-screens. An eTerminal Disclaimer that meets all requirements is auto-processed and approved immediately upon submission. For more information about eTerminal Disclaimers, refer to www.uspto.gov/patents/process/file/efs/guidance/eTD-info-I.jsp.

5. Claims 1-17 are rejected on the ground of nonstatutory double patenting as being unpatentable over claims 1-2, 8, 17, 18, and 19 of U.S. Patent No. 10,598,101. Although the claims at issue are not identical, they are not patentably distinct from each other because the limitations are similar.

6. Claims 1-17 rejected on the ground of nonstatutory double patenting over claims 1-2, 8, 17, 18, and 19 of U.S. Patent No. 10,598,101 since the claims, if allowed, would improperly extend the "right to exclude" already granted in the patent.

The subject matter claimed in the instant application is fully disclosed in the patent and is covered by the patent since the patent and the application are claiming common subject matter.

Furthermore, there is no apparent reason why applicant was prevented from presenting claims corresponding to those of the instant application during prosecution of the application which matured into a patent. See *In re Schneller*, 397 F.2d 350, 158 USPQ 210 (CCPA 1968). See also MPEP § 804.

Claim Rejections - 35 USC § 102

7. In the event the determination of the status of the application as subject to AIA 35 U.S.C. 102 and 103 (or as subject to pre-AIA 35 U.S.C. 102 and 103) is incorrect, any correction of the statutory basis for the rejection will not be considered a new ground of rejection if the prior art relied upon, and the rationale supporting the rejection, would be the same under either status.

8. The following is a quotation of the appropriate paragraphs of 35 U.S.C. 102 that form the basis for the rejections under this section made in this Office action:

> A person shall be entitled to a patent unless –

(a)(1) the claimed invention was patented, described in a printed publication, or in public use, on sale, or otherwise available to the public before the effective filing date of the claimed invention.

9. Claim(s) 10-11 is/are rejected under 35 U.S.C. 102(a)(1) as being anticipated by Sugimoto (U.S. Publication 2007/0137591), hereinafter "Sugimoto".

Regarding claim 10, Sugimoto discloses a fuel selector of a dual fuel generator comprising: a selector switch (12) having a first fuel mode (cutoff mode shown in figure 7) and a second fuel mode (first position fuel bottle mode shown in figure 7); a solenoid switch (kill switch 74) having open and closed positions; and a fuel solenoid having open and closed positions (kill switch associated with fuel so 74 controls a fuel solenoid); wherein, when the selector switch (12) is in the first fuel mode (cutoff position shown in figure 7), the solenoid switch and the fuel solenoid are in the closed positions (shown in figure 7 that kill switch is closed) and, when the selector switch is in the second fuel mode (first position shown in figure 7), the solenoid switch (74) and the fuel solenoid are in the open positions (shown in figure 7). Examiner notes that claim 10 is very broad and does not mention the two different fuels. Therefore the first fuel mode can be the fuel cut off mode and the second fuel mode can be regarded as the fuel bottle supply mode (first position).

Regarding claim 11, Sugimoto discloses the fuel selector of claim 10 wherein the selector switch (12) triggers the solenoid switch (74) when changed from the second fuel mode to the first fuel mode, so as to cause the solenoid switch and the fuel solenoid to operate in the closed positions (shown in figure 7). Examiner notes that when the switch (12) is changed from a fuel bottle mode to the off mode, the kill switch (74) is triggered to be closed.

Allowable Subject Matter

10. Claims 1-7, 9, 12-17 are objected to as being dependent upon a rejected base claim, but would be allowable if rewritten in independent form including all of the limitations of the base claim and any intervening claims.

11. The following is a statement of reasons for the indication of allowable subject matter: There is no prior art that teaches all the limitations that teaches all the limitations of claim 1, but more specifically, a fuel selector switch for a dual fuel generator having valve assembly fluidly coupled to a first fuel source and a second fuel source, a used can manually select one of a first fuel or a second fuel depending on the position of the selector switch, the valve assembly having two fuel inputs and two fuel outputs. All depending claims are allowable.

Response to Arguments

12. Applicant's arguments, filed on 6/11/2021, with respect to claim 1 have been fully considered and are persuasive. The rejections of claims 1-8 have been withdrawn.

13. Applicant's arguments with respect to claim(s) 10 and 11 have been considered but are moot because the examiner refers to other portions of Sugimoto to form a new ground of rejection.

Conclusion

14. The prior art made of record and not relied upon is considered pertinent to applicant's disclosure. Refer to PTO-892.

15. Any inquiry concerning this communication or earlier communications from the examiner should be directed to SYED O HASAN whose telephone number is (571)272-0990. The examiner can normally be reached on Monday-Friday; 11AM-7PM.

Examiner interviews are available via telephone, in-person, and video conferencing using a USPTO supplied web-based collaboration tool. To schedule an interview, applicant is encouraged to use the USPTO Automated Interview Request (AIR) at http://www.uspto.gov/interviewpractice.

If attempts to reach the examiner by telephone are unsuccessful, the examiner's supervisor, Lindsay Low can be reached on (571) 272-1196. The fax phone number for the organization where this application or proceeding is assigned is 571-273-8300.

Information regarding the status of an application may be obtained from the Patent Application Information Retrieval (PAIR) system. Status information for published applications may be obtained from either Private PAIR or Public PAIR. Status information for unpublished applications is available through Private PAIR only. For more information about the PAIR system, see https://ppair-my.uspto.gov/pair/PrivatePair. Should you have questions on access to the Private PAIR system, contact the Electronic Business Center (EBC) at 866-217-9197 (toll-free). If you would like assistance from a USPTO Customer Service Representative or access to the automated information system, call 800-786-9199 (IN USA OR CANADA) or 571-272-1000.

/SYED O HASAN/
Primary Examiner, Art Unit 3747
6/18/2021

Notice of References Cited	Application/Control No. 16/789,722	Applicant(s)/Patent Under Reexamination Sarder et al.	
	Examiner SYED O HASAN	Art Unit 3747	Page 1 of 1

U.S. PATENT DOCUMENTS

*		Document Number Country Code-Number-Kind Code	Date MM-YYYY	Name	CPC Classification	US Classification
*	A	US-4489699-A	12-1984	Poehlman; Arthur G.	F02B69/04	123/525
*	B	US-20060169238-A1	08-2006	Mazuka; Naoto	F02B63/04	123/179.18
*	C	US-20040240141-A1	12-2004	Stolt, Peter E.	H01H47/18	361/160
*	D	US-20020125115-A1	09-2002	Burkholder, Robert F.	H01R13/465	200/51.11
*	E	US-20070137591-A1	06-2007	Sugimoto; Yasuhiro	F02D29/06	123/41.7
*	F	US-3696333-A	10-1972	Mott; Willard	F02N11/0803	290/38D
	G					
	H					
	I					
	J					
	K					
	L					
	M					

FOREIGN PATENT DOCUMENTS

*		Document Number Country Code-Number-Kind Code	Date MM-YYYY	Country	Name	CPC Classification
	N					
	O					
	P					
	Q					
	R					
	S					
	T					

NON-PATENT DOCUMENTS

*		Include as applicable: Author, Title Date, Publisher, Edition or Volume, Pertinent Pages)
	U	
	V	
	W	
	X	

*A copy of this reference is not being furnished with this Office action. (See MPEP § 707.05(a).)
Dates in MM-YYYY format are publication dates. Classifications may be US or foreign.

Search Notes	Application/Control No.	Applicant(s)/Patent Under Reexamination
	16/789,722	Sarder et al.
	Examiner	**Art Unit**
	SYED O HASAN	3747

CPC - Searched*		
Symbol	**Date**	**Examiner**
F02D19/0676, 19/0613, 19/0647, 29/06, 19/0681, F02M21/0293, 21/0236, 13/08, F02B53/00, 63/00, H02K1/22	03/08/2021	/S.O.H/
Updated Search	06/17/2021	/S.O.H/

CPC Combination Sets - Searched*		
Symbol	**Date**	**Examiner**

US Classification - Searched*			
Class	**Subclass**	**Date**	**Examiner**

* See search history printout included with this form or the SEARCH NOTES box below to determine the scope of the search.

Search Notes		
Search Notes	**Date**	**Examiner**
Searched in subclasses above with keywords.	03/08/2021	/S.O.H/
EAST search strategy attached. Inventor name searches performed.	03/08/2021	/S.O.H/

Interference Search			
US Class/CPC Symbol	**US Subclass/CPC Group**	**Date**	**Examiner**

	/SYED O HASAN/ Primary Examiner, Art Unit 3747

Champion - EX2109, Page 114 of 403
Generac Power Systems, Inc. et al v. Champion Power Equip., Inc.
IPR2025-01438

Index of Claims	Application/Control No.	Applicant(s)/Patent Under Reexamination
	16/789,722	Sarder et al.
	Examiner	**Art Unit**
	SYED O HASAN	3747

✓	Rejected	-	Cancelled	N	Non-Elected	A	Appeal
=	Allowed	÷	Restricted	I	Interference	O	Objected

CLAIMS

☐ Claims renumbered in the same order as presented by applicant ☐ CPA ☐ T.D. ☐ R.1.47

CLAIM		DATE								
Final	Original	03/08/2021	06/18/2021							
	1	✓	O							
	2	✓	O							
	3	✓	O							
	4	O	O							
	5	✓	O							
	6	✓	O							
	7	O	O							
	8	O	O							
	9	✓	O							
	10	✓	✓							
	11	✓	✓							
	12	✓	O							
	13	✓	O							
	14	✓	O							
	15	✓	O							
	16	✓	O							
	17	✓	O							

EAST Search History

EAST Search History (Prior Art)

Ref #	Hits	Search Query	DBs	Default Operator	Plurals	Time Stamp
S1	11	((Mark) near2 (Sarder)).INV.	US-PGPUB; USPAT; USOCR	OR	OFF	2015/06/23 14:16
S2	2	((Leigh) near2 (Jenison)).INV.	US-PGPUB; USPAT; USOCR	OR	OFF	2015/06/23 14:17
S3	2	((Ian) near2 (Schmit)).INV.	US-PGPUB; USPAT; USOCR	OR	OFF	2015/06/23 14:18
S4	834	123/525.ccls.	US-PGPUB; USPAT; USOCR; FPRS; EPO; JPO; DERWENT	OR	OFF	2015/06/23 14:20
S5	3	123/525.ccls. and (dual near3 fuel near3 generator)	US-PGPUB; USPAT; USOCR; FPRS; EPO; JPO; DERWENT	OR	OFF	2015/06/23 14:20
S6	2	123/525.ccls. and (((multiple near3 fuel) or bi-fuel) near3 generator)	US-PGPUB; USPAT; USOCR; FPRS; EPO; JPO; DERWENT	OR	OFF	2015/06/23 14:21
S7	3	123/525.ccls. and (((multiple near3 fuel) or bi-fuel or (LPG near5 gasoline)) near10 generator)	US-PGPUB; USPAT; USOCR; FPRS; EPO; JPO; DERWENT	OR	OFF	2015/06/23 14:22
S8	236	(((multiple near3 fuel) or bi-fuel or (LPG near5 gasoline)) near10 generator)	US-PGPUB; USPAT; USOCR; FPRS; EPO; JPO; DERWENT	OR	OFF	2015/06/23 14:22
S9	10	(((multiple near3 fuel) or bi-fuel or (LPG near5 gasoline)) near10 generator) same (switch)	US-PGPUB; USPAT; USOCR;	OR	OFF	2015/06/23 14:23

			FPRS; EPO; JPO; DERWENT			
S10	458	f02D19/0676.cpc.	US-PGPUB; USPAT; USOCR; FPRS; EPO; JPO; DERWENT	OR	OFF	2015/06/23 14:23
S11	17	F02D19/0676.cpc. and (generator)	US-PGPUB; USPAT; USOCR; FPRS; EPO; JPO; DERWENT	OR	OFF	2015/06/23 14:24
S12	6	F02M21/0293.cpc. and (generator)	US-PGPUB; USPAT; USOCR; FPRS; EPO; JPO; DERWENT	OR	OFF	2015/06/23 14:24
S13	14	F02M21/0236.cpc. and (generator)	US-PGPUB; USPAT; USOCR; FPRS; EPO; JPO; DERWENT	OR	OFF	2015/06/23 14:25
S14	18	F02M21/0233.cpc. and (generator)	US-PGPUB; USPAT; USOCR; FPRS; EPO; JPO; DERWENT	OR	OFF	2015/06/23 14:27
S15	21	F02M13/08.cpc. and (generator)	US-PGPUB; USPAT; USOCR; FPRS; EPO; JPO; DERWENT	OR	OFF	2015/06/23 14:29
S16	0	(generator) and (dual near3 fuel) and (selectro near3 switch)	US-PGPUB; USPAT; USOCR; FPRS; EPO; JPO; DERWENT	OR	OFF	2015/06/23 14:32
S17	16	(generator) and (dual near3 fuel) and (selector near3 switch)	US-PGPUB; USPAT; USOCR; FPRS; EPO;	OR	OFF	2015/06/23 14:32

			JPO; DERWENT			
S18	42	(generator) and ((dual near3 fuel) or (bi-fuel) or (multiple near3 fuel)) and (selector near3 switch)	US-PGPUB; USPAT; USOCR; FPRS; EPO; JPO; DERWENT	OR	OFF	2015/06/23 14:33
S19	46	(generator) and ((dual near3 fuel) or (bi-fuel) or (multiple near3 fuel)) and (fuel near5 select$4 near5 switch)	US-PGPUB; USPAT; USOCR; FPRS; EPO; JPO; DERWENT	OR	OFF	2015/06/23 14:39
S20	46	(generator or genset) and ((dual near3 fuel) or (bi-fuel) or (multiple near3 fuel)) and (fuel near5 select$4 near5 switch)	US-PGPUB; USPAT; USOCR; FPRS; EPO; JPO; DERWENT	OR	OFF	2015/06/23 14:40
S21	728	137/383.ccls.	US-PGPUB; USPAT; USOCR; FPRS; EPO; JPO; DERWENT	OR	OFF	2015/06/23 14:58
S22	96	137/384.8.ccls.	US-PGPUB; USPAT; USOCR; FPRS; EPO; JPO; DERWENT	OR	OFF	2015/06/23 14:58
S23	0	317/317.5.ccls.	US-PGPUB; USPAT; USOCR; FPRS; EPO; JPO; DERWENT	OR	OFF	2015/06/23 15:04
S24	133	273/317.5.ccls.	US-PGPUB; USPAT; USOCR; FPRS; EPO; JPO; DERWENT	OR	OFF	2015/06/23 15:04
S25	161	292/4.ccls.	US-PGPUB; USPAT; USOCR; FPRS; EPO;	OR	OFF	2015/06/23 15:06

			JPO; DERWENT			
S26	106	292/290.ccls.	US-PGPUB; USPAT; USOCR; FPRS; EPO; JPO; DERWENT	OR	OFF	2015/06/23 15:07
S27	578	49/503.ccls.	US-PGPUB; USPAT; USOCR; FPRS; EPO; JPO; DERWENT	OR	OFF	2015/06/23 15:15
S28	92	123/2-3.ccls. and (fuel near5 switch)	US-PGPUB; USPAT; USOCR; FPRS; EPO; JPO; DERWENT	OR	OFF	2015/06/23 15:16
S29	163	(generator) same (LPG near20 gasoline)	US-PGPUB; USPAT; USOCR; FPRS; EPO; JPO; DERWENT	OR	OFF	2015/06/23 15:35
S30	163	(generator) same (LPG near20 gasoline)	US-PGPUB; USPAT; USOCR; FPRS; EPO; JPO; DERWENT	OR	OFF	2015/06/23 15:35
S31	19	(fuel near3 select$4 near3 switch) and (LPG near20 gasoline)	US-PGPUB; USPAT; USOCR; FPRS; EPO; JPO; DERWENT	OR	OFF	2015/06/23 15:53
S32	321,499	(select$4 near3 switch)	US-PGPUB; USPAT; USOCR; FPRS; EPO; JPO; DERWENT	OR	OFF	2015/06/23 15:55
S33	1,395	(select$4 near3 switch) same (enclosure)	US-PGPUB; USPAT; USOCR; FPRS; EPO;	OR	OFF	2015/06/23 15:55

			JPO; DERWENT			
S34	123	(switch) same (enclosure) same (first near3 valve) same (second near3 valve)	US-PGPUB; USPAT; USOCR; FPRS; EPO; JPO; DERWENT	OR	OFF	2015/06/23 15:56
S35	0	(switch) same (genset) same (first near3 valve) same (second near3 valve)	US-PGPUB; USPAT; USOCR; FPRS; EPO; JPO; DERWENT	OR	OFF	2015/06/23 15:58
S36	11	(genset) and ((switch) same (first near3 valve) same (second near3 valve))	US-PGPUB; USPAT; USOCR; FPRS; EPO; JPO; DERWENT	OR	OFF	2015/06/23 15:58
S37	550	(slider near3 switch).ti.	US-PGPUB; USPAT; USOCR; FPRS; EPO; JPO; DERWENT	OR	OFF	2015/06/23 16:17
S38	28	(slider near3 switch).ti.	US-PGPUB; USPAT	OR	OFF	2015/06/23 16:19
S39	2	("7135651" | "7223931").PN. OR ("7772508").URPN.	US-PGPUB; USPAT; USOCR	OR	OFF	2015/06/23 16:20
S40	209	200/241.ccls.	US-PGPUB; USPAT	OR	OFF	2015/06/23 16:23
S41	45	200/241.ccls. and (groove or slot)	US-PGPUB; USPAT	OR	OFF	2015/06/23 16:23
S42	151	290/1A.ccls. and (groove or slot)	US-PGPUB; USPAT; USOCR; FPRS; EPO; JPO; DERWENT	OR	OFF	2015/06/23 16:24
S43	414	290/1A.ccls. and (switch)	US-PGPUB; USPAT; USOCR; FPRS; EPO; JPO; DERWENT	OR	OFF	2015/06/23 16:25

S44	45	290/1A.ccls. and (select$4 near3 switch)	US-PGPUB; USPAT; USOCR; FPRS; EPO; JPO; DERWENT	OR	OFF	2015/06/23 16:25
S45	16,208	(select$4 near3 switch).ti.	US-PGPUB; USPAT; USOCR; FPRS; EPO; JPO; DERWENT	OR	OFF	2015/06/23 16:30
S46	42	(fuel near3 select$4 near3 switch).ti.	US-PGPUB; USPAT; USOCR; FPRS; EPO; JPO; DERWENT	OR	OFF	2015/06/23 16:30
S47	1	("2004/0240141").URPN.	USPAT	OR	OFF	2015/06/23 16:31
S48	436	261/16.ccls.	USPAT	OR	OFF	2015/06/23 16:38
S49	18	261/16.ccls. and switch	USPAT	OR	OFF	2015/06/23 16:38
S50	0	48/180R.ccls.	USPAT	OR	OFF	2015/06/23 16:38
S51	0	48/180C.ccls.	USPAT	OR	OFF	2015/06/23 16:38
S52	0	48/180C.ccls.	US-PGPUB; USPAT; USOCR; FPRS; EPO; JPO; DERWENT	OR	OFF	2015/06/23 16:39
S53	834	123/525.ccls.	US-PGPUB; USPAT; USOCR; FPRS; EPO; JPO; DERWENT	OR	OFF	2015/06/23 16:39
S54	215	123/525.ccls. and (switch)	US-PGPUB; USPAT; USOCR; FPRS; EPO; JPO; DERWENT	OR	OFF	2015/06/23 16:39
S55	76	123/525.ccls. and (switch) and (dual near3 fuel)	US-PGPUB; USPAT;	OR	OFF	2015/06/23 16:39

			USOCR; FPRS; EPO; JPO; DERWENT			
S56	15	("20130122439" | "20130098349" | "20060169238" | "20040240141" | "4489699").PN.	US-PGPUB; USPAT; USOCR; FPRS; EPO; JPO; DERWENT	OR	OFF	2015/06/29 14:24
S57	2	(dual near3 fuel near3 engine) same (fuel near3 handle)	US-PGPUB; USPAT; USOCR	OR	OFF	2015/12/17 18:15
S58	3	(dual near3 fuel near3 engine) same (fuel near3 handle)	US-PGPUB; USPAT; USOCR; FPRS; EPO; JPO; DERWENT	OR	OFF	2015/12/17 18:16
S59	16	(dual near3 fuel near3 engine) same (fuel near3 lever)	US-PGPUB; USPAT; USOCR; FPRS; EPO; JPO; DERWENT	OR	OFF	2015/12/17 18:17
S60	5	(dual near3 fuel near3 engine) same (fuel near3 valve near3 (lever or switch or handle))	US-PGPUB; USPAT; USOCR; FPRS; EPO; JPO; DERWENT	OR	OFF	2015/12/17 18:23
S61	6	(dual near3 fuel near3 (engine or generator)) same (fuel near3 valve near3 (lever or switch or handle))	US-PGPUB; USPAT; USOCR; FPRS; EPO; JPO; DERWENT	OR	OFF	2015/12/17 18:45
S62	24	(dual near3 fuel near3 (engine or generator)) same (fuel near3 (valve or supply) near3 (lever or switch or handle))	US-PGPUB; USPAT; USOCR; FPRS; EPO; JPO; DERWENT	OR	OFF	2015/12/17 18:45
S63	4,939	(gas near3 station).ti.	US-PGPUB; USPAT; USOCR; FPRS; EPO; JPO; DERWENT	OR	OFF	2015/12/17 18:55

S64	39	(gas near3 station).ti. and lever	US-PGPUB; USPAT; USOCR; FPRS; EPO; JPO; DERWENT	OR	OFF	2015/12/17 18:55
S65	292	(generator).ti. and ((dual or multiple) near3 (fuel))	US-PGPUB; USPAT; USOCR; FPRS; EPO; JPO; DERWENT	OR	OFF	2015/12/17 18:56
S66	98	(generator).ti. and ((dual or multiple) near3 (fuel)) and (engine)	US-PGPUB; USPAT; USOCR; FPRS; EPO; JPO; DERWENT	OR	OFF	2015/12/17 18:56
S67	13	(generator).ti. and (((dual or multiple) near3 (fuel)) same (switch or handle or lever)) and (engine)	US-PGPUB; USPAT; USOCR; FPRS; EPO; JPO; DERWENT	OR	OFF	2015/12/17 18:56
S69	39	"4489699"	US-PGPUB; USPAT; USOCR	OR	OFF	2017/12/28 20:09
S70	14	F02D19/0613.cpc. and ((dual near3 fuel) same (switch))	US-PGPUB; USPAT; USOCR	OR	OFF	2018/01/02 20:38
S71	25	F02D19/0613.cpc. and ((dual near3 fuel) same (switch))	US-PGPUB; USPAT; USOCR; FPRS; EPO; JPO; DERWENT	OR	OFF	2018/01/02 20:38
S72	72	F02D19/0647.cpc. and ((dual near3 fuel) same (switch))	US-PGPUB; USPAT; USOCR; FPRS; EPO; JPO; DERWENT	OR	OFF	2018/01/02 20:39
S73	77	F02D19/0647.cpc. and ((dual near3 fuel) same (switch))	US-PGPUB; USPAT; USOCR; FPRS; EPO; JPO; DERWENT	OR	ON	2018/01/02 20:39

S74	11	F02D19/06.cpc. and ((dual near3 fuel) same (switch))	US-PGPUB; USPAT; USOCR; FPRS; EPO; JPO; DERWENT	OR	ON	2018/01/02 20:40
S75	32	F02M13/08.cpc. and ((dual near3 fuel) same (switch))	US-PGPUB; USPAT; USOCR; FPRS; EPO; JPO; DERWENT	OR	ON	2018/01/02 20:41
S76	9	(fuel near3 select$4 near3 switch) same (valve near3 assembly)	US-PGPUB; USPAT; USOCR; FPRS; EPO; JPO; DERWENT	OR	OFF	2018/08/01 21:24
S77	0	(geneartor) same (fuel near3 switch) same (valve near3 assembly)	US-PGPUB; USPAT; USOCR; FPRS; EPO; JPO; DERWENT	OR	OFF	2018/08/01 21:25
S78	9	(generator) same (fuel near3 switch) same (valve near3 assembly)	US-PGPUB; USPAT; USOCR; FPRS; EPO; JPO; DERWENT	OR	OFF	2018/08/01 21:25
S79	6,704	(generator) same (fuel near3 valve)	US-PGPUB; USPAT; USOCR; FPRS; EPO; JPO; DERWENT	OR	OFF	2018/08/01 21:26
S80	10	(generator) same (dual near2 fuel near3 valve)	US-PGPUB; USPAT; USOCR; FPRS; EPO; JPO; DERWENT	OR	OFF	2018/08/01 21:26
S81	13	(generator) same (dual near2 fuel near3 switch)	US-PGPUB; USPAT; USOCR; FPRS; EPO; JPO; DERWENT	OR	OFF	2018/08/01 21:27

S82	13	(generator) same (dual near3 fuel near3 switch)	US-PGPUB; USPAT; USOCR; FPRS; EPO; JPO; DERWENT	OR	OFF	2018/08/01 21:28
S83	19	(gaseous near3 fuel) same (dual near3 fuel near3 switch)	US-PGPUB; USPAT; USOCR; FPRS; EPO; JPO; DERWENT	OR	OFF	2018/08/01 21:54
S84	52	(gaseous near3 fuel) same (fuel near3 select$4 near3 switch)	US-PGPUB; USPAT; USOCR; FPRS; EPO; JPO; DERWENT	OR	OFF	2018/08/01 21:56
S85	85	F02D19/0613.cpc. and (switch same valve)	US-PGPUB; USPAT; USOCR; FPRS; EPO; JPO; DERWENT	OR	OFF	2018/08/01 22:03
S86	31	F02D19/0613.cpc. and (switch same valve same (user or operator))	US-PGPUB; USPAT; USOCR; FPRS; EPO; JPO; DERWENT	OR	OFF	2018/08/01 22:04
S87	25	F02D19/081.cpc. and (switch same valve same (user or operator))	US-PGPUB; USPAT; USOCR; FPRS; EPO; JPO; DERWENT	OR	OFF	2018/08/01 22:08
S88	16	F02D19/0642.cpc. and (switch same valve same (user or operator))	US-PGPUB; USPAT; USOCR; FPRS; EPO; JPO; DERWENT	OR	OFF	2018/08/01 22:10
S89	39	"4489699"	USPAT	OR	OFF	2018/08/02 14:52
S90	1	"20040240141"	USPAT	OR	OFF	2018/08/02 14:53
S91	3	"20040240141"	US-PGPUB; USPAT; USOCR;	OR	OFF	2018/08/02 14:53

			FPRS; EPO; JPO; DERWENT			
S92	3	"20060169238"	US-PGPUB; USPAT; USOCR; FPRS; EPO; JPO; DERWENT	OR	OFF	2018/08/02 14:53
S93	4	"20130098349"	US-PGPUB; USPAT; USOCR; FPRS; EPO; JPO; DERWENT	OR	OFF	2018/08/02 14:55
S94	5	"20130122439"	US-PGPUB; USPAT; USOCR; FPRS; EPO; JPO; DERWENT	OR	OFF	2018/08/02 14:58
S95	1	"20060169238"	USPAT	OR	OFF	2018/08/02 14:58
S96	0	123/198E.ccls. and (duel near3 fuel)	USPAT	OR	OFF	2018/08/02 15:01
S97	1	123/198E.ccls. and (dual near3 fuel)	USPAT	OR	OFF	2018/08/02 15:01
S98	1	123/198E.ccls. and (dual near3 fuel)	US-PGPUB; USPAT; USOCR; FPRS; EPO; JPO; DERWENT	OR	OFF	2018/08/02 15:02
S99	10	123/2.ccls. and (dual near3 fuel)	US-PGPUB; USPAT; USOCR; FPRS; EPO; JPO; DERWENT	OR	OFF	2018/08/02 16:27
S100	0	60/39.463. and (dual near3 fuel)	US-PGPUB; USPAT; USOCR; FPRS; EPO; JPO; DERWENT	OR	OFF	2018/08/02 16:31
S101	121	60/39.463.ccls. and (dual near3 fuel)	US-PGPUB; USPAT; USOCR;	OR	OFF	2018/08/02 16:31

			FPRS; EPO; JPO; DERWENT			
S102	34	60/39.463.ccls. and ((dual near3 fuel) same (valve))	US-PGPUB; USPAT; USOCR; FPRS; EPO; JPO; DERWENT	OR	OFF	2018/08/02 16:32
S103	50	"4489699"	US-PGPUB; USPAT; USOCR; FPRS; EPO; JPO; DERWENT	OR	OFF	2018/08/02 17:42
S104	5	generator and (((dual or multiple or second$4) near3 (fuel)) same (valve near2 handle) same (user or operator or manual or manually))	US-PGPUB; USPAT; USOCR; FPRS; EPO; JPO; DERWENT	OR	ON	2019/06/16 23:09
S105	16	generator and (((dual or multiple or second$4) near3 (fuel)) same (valve near2 handle))	US-PGPUB; USPAT; USOCR; FPRS; EPO; JPO; DERWENT	OR	ON	2019/06/16 23:10
S106	20	generator and (((dual or multiple or second$4) near3 (fuel)) same (valve near3 handle))	US-PGPUB; USPAT; USOCR; FPRS; EPO; JPO; DERWENT	OR	ON	2019/06/16 23:10
S107	540	generator and (((dual or multiple or second$4) near3 (fuel)) same (valve) same (user or operator or manual or manually))	US-PGPUB; USPAT; USOCR; FPRS; EPO; JPO; DERWENT	OR	ON	2019/06/16 23:12
S108	124	generator and (((dual or multiple or second$4) near3 (fuel)) same (valve) same (user or operator or manual or manually) same switch)	US-PGPUB; USPAT; USOCR; FPRS; EPO; JPO; DERWENT	OR	ON	2019/06/16 23:13
S109	4	("2681694").URPN.	USPAT	OR	OFF	2019/06/16 23:23

S110	37	F02D19/0676.cpc. and ((valve) same (user or operator or manual or manually) same switch)	US-PGPUB; USPAT; USOCR; FPRS; EPO; JPO; DERWENT	OR	ON	2019/06/17 17:17
S111	19	F02D19/0681.cpc. and ((valve) same (user or operator or manual or manually) same switch)	US-PGPUB; USPAT; USOCR; FPRS; EPO; JPO; DERWENT	OR	ON	2019/06/17 17:21
S112	3	("2008/0022983").URPN.	USPAT	OR	OFF	2019/06/17 17:25
S113	0	F02B2063/046.cpc. and ((valve) same (user or operator or manual or manually) same switch)	US-PGPUB; USPAT; USOCR; FPRS; EPO; JPO; DERWENT	OR	ON	2019/06/17 17:29
S114	23	F02B2063/046.cpc. and ((valve) same (user or operator or manual or manually))	US-PGPUB; USPAT; USOCR; FPRS; EPO; JPO; DERWENT	OR	ON	2019/06/17 17:29
S115	23	F02B2063/046.cpc. and ((valve) same (user or operator or manual or manually or mechanically or mechanical))	US-PGPUB; USPAT; USOCR; FPRS; EPO; JPO; DERWENT	OR	ON	2019/06/17 17:54
S116	33	F02B63/048.cpc. and ((valve) same (user or operator or manual or manually or mechanically or mechanical))	US-PGPUB; USPAT; USOCR; FPRS; EPO; JPO; DERWENT	OR	ON	2019/06/17 17:54
S117	1,201	(((dual or multiple or second$4 or bi) near3 (fuel)) same generator) and ((valve) same (user or operator or manual or manually or mechanically or mechanical))	US-PGPUB; USPAT; USOCR; FPRS; EPO; JPO; DERWENT	OR	ON	2019/06/17 18:00
S118	72	(((dual or multiple or second$4 or bi) near3 (fuel)) same generator) and ((valve) same (user or operator or manual or manually or mechanically or mechanical) same handle)	US-PGPUB; USPAT; USOCR; FPRS; EPO;	OR	ON	2019/06/17 18:01

			JPO; DERWENT			
S119	14	(((dual or multiple or second$4 or bi) near3 (fuel)) same generator).ti. and ((valve) same (user or operator or manual or manually or mechanically or mechanical))	US-PGPUB; USPAT; USOCR; FPRS; EPO; JPO; DERWENT	OR	ON	2019/06/17 18:05
S120	5	(((dual or multiple or second$4 or bi) near3 (fuel)) same generator).ti. and ((valve) same handle)	US-PGPUB; USPAT; USOCR; FPRS; EPO; JPO; DERWENT	OR	ON	2019/06/17 18:12
S121	139	(((dual or multiple or second$4 or bi) near3 (fuel)) same generator) and ((valve) same handle)	US-PGPUB; USPAT; USOCR; FPRS; EPO; JPO; DERWENT	OR	ON	2019/06/17 18:12
S122	34	(((dual or multiple or second$4 or bi) near3 (fuel)) same generator) and ((valve) near3 handle)	US-PGPUB; USPAT; USOCR; FPRS; EPO; JPO; DERWENT	OR	ON	2019/06/17 18:12
S123	555	generator and (((dual or multiple or second$4 or bi) near3 (fuel)) same (valve) same (user or operator or manual or manually))	US-PGPUB; USPAT; USOCR; FPRS; EPO; JPO; DERWENT	OR	ON	2019/06/17 18:23
S124	310	(((dual or multiple or second$4 or bi) near3 (fuel)) same generator) and ((valve) near3 (switch or lever or selector))	US-PGPUB; USPAT; USOCR; FPRS; EPO; JPO; DERWENT	OR	ON	2019/06/17 18:23
S125	275	(generator same (case or casing or housing or enclosure)) and (((dual or multiple or second$4 or bi) near3 (fuel))) and ((valve) same (fuel near3 (switch or lever or selector or handle)))	US-PGPUB; USPAT; USOCR; FPRS; EPO; JPO; DERWENT	OR	ON	2019/06/17 18:36
S126	9	("2007/0137591").URPN.	USPAT	OR	OFF	2019/06/17 18:40
S127	725,165	(generator).ti. engine and (((dual or multiple or second$4 or bi) near3	US-PGPUB; USPAT; USOCR;	OR	ON	2019/06/17 18:48

		(fuel))) and ((valve) same (fuel near3 (switch or lever or selector or handle)))	FPRS; EPO; JPO; DERWENT			
S128	23	(generator).ti. and engine and (((dual or multiple or second$4 or bi) near3 (fuel))) and ((valve) same (fuel near3 (switch or lever or selector or handle)))	US-PGPUB; USPAT; USOCR; FPRS; EPO; JPO; DERWENT	OR	ON	2019/06/17 18:49
S129	47	(generator).ti. and engine and (((dual or multiple or second$4 or bi) near3 (fuel))) and ((fuel near3 (switch or lever or selector or handle)))	US-PGPUB; USPAT; USOCR; FPRS; EPO; JPO; DERWENT	OR	ON	2019/06/17 18:49
S130	0	(((dual or multiple or second$4 or bi) near3 (fuel) near3 gnerator)) and (second$4 near3 (fuel near3 (switch or lever or selector or handle)))	US-PGPUB; USPAT; USOCR; FPRS; EPO; JPO; DERWENT	OR	ON	2019/06/17 18:56
S131	18	(((dual or multiple or second$4 or bi) near3 (fuel) near3 generator)) and (second$4 near3 (fuel near3 (switch or lever or selector or handle)))	US-PGPUB; USPAT; USOCR; FPRS; EPO; JPO; DERWENT	OR	ON	2019/06/17 18:57
S132	34	(((dual or multiple or second$4 or bi) near3 (fuel) near3 generator)) and ((user or manual or manually or operator or mechanically) same (fuel near3 (switch or lever or selector or handle)))	US-PGPUB; USPAT; USOCR; FPRS; EPO; JPO; DERWENT	OR	ON	2019/06/17 19:00
S133	393	(generator or genset) and (((dual or multiple or second$4 or bi) near3 (fuel))) and ((user or manual or manually or operator or mechanically) same (fuel near3 (switch or lever or selector or handle)))	US-PGPUB; USPAT; USOCR; FPRS; EPO; JPO; DERWENT	OR	ON	2019/06/17 19:03
S134	433	123/525.ccls.	USPAT	OR	OFF	2019/06/17 19:31
S135	186	123/525.ccls. and (fuel same valve same (handle or switch or lever or selector))	US-PGPUB; USPAT; USOCR; FPRS; EPO; JPO; DERWENT	OR	OFF	2019/06/17 19:31

S136	22	123/525.ccls. and (generator or genset) and (fuel same valve same (handle or switch or lever or selector))	US-PGPUB; USPAT; USOCR; FPRS; EPO; JPO; DERWENT	OR	OFF	2019/06/17 19:32
S137	5	"20070137591"	US-PGPUB; USPAT; USOCR; FPRS; EPO; JPO; DERWENT	OR	OFF	2019/06/17 19:37
S138	1	"20070137591"	USPAT	OR	OFF	2019/09/25 13:50
S139	2	"20070137591"	US-PGPUB; USPAT	OR	OFF	2019/09/25 13:50
S140	46	"4489699"	US-PGPUB; USPAT	OR	OFF	2019/09/25 13:50
S141	63	("20020134362" | "20040139943" | "20100258099" | "20110168133" | "20110253102" | "20130047964" | "20130220274" | "20140202430" | "20140238340" | "20140373531" | "20150122230" | "2722208" | "3384059" | "3412258" | "3659574" | "3718000" | "3783849" | "3888223" | "4335697" | "4372276" | "4373493" | "4393848" | "4450821" | "4463735" | "4480595" | "4502453" | "4619240" | "4628871" | "4708094" | "4895124" | "4979480" | "5092305" | "5161496" | "5171487" | "5228423" | "5287839" | "5320078" | "5325835" | "5379740" | "5419291" | "5438968" | "5450832" | "5611312" | "5673670" | "5809979" | "5816224" | "6082323" | "6213083" | "6223730" | "6276345" | "6401685" | "6453877" | "6591817" | "6914342" | "7905469" | "8342158" | "8590510" | "9435273" | "20040240141" | "20060169238" | "20130098349" | "20130122439" | "4489699").PN.	US-PGPUB; USPAT	OR	OFF	2019/12/19 20:00
S143	1	"10598101"	USPAT	OR	OFF	2021/02/23 08:07
S144	1	"20070137591"	USPAT	OR	OFF	2021/03/08 19:48
S145	2	"20070137591"	US-PGPUB; USPAT	OR	OFF	2021/03/08 19:48

S146	5	"10598101"	US-PGPUB; USPAT	OR	OFF	2021/03/08 20:36
S147	49	"4489699"	US-PGPUB; USPAT	OR	OFF	2021/03/08 21:16
S148	0	carburettor near3 solenoid near3 switch	US-PGPUB; USPAT	OR	OFF	2021/03/08 21:21
S149	0	carburettor near3 solenoid near3 switch	US-PGPUB; USPAT; USOCR; FPRS; EPO; JPO	OR	OFF	2021/03/08 21:22
S150	43	carbur$8 near3 solenoid near3 switch	US-PGPUB; USPAT; USOCR; FPRS; EPO; JPO	OR	OFF	2021/03/08 21:22
S151	38	engine and (carbur$8 near3 solenoid near3 switch)	US-PGPUB; USPAT; USOCR; FPRS; EPO; JPO	OR	OFF	2021/03/08 21:22
S152	0	engine and geneartor and (carbur$8 near3 solenoid near3 switch)	US-PGPUB; USPAT; USOCR; FPRS; EPO; JPO	OR	OFF	2021/03/08 21:22
S153	26	engine and generator and (carbur$8 near3 solenoid near3 switch)	US-PGPUB; USPAT; USOCR; FPRS; EPO; JPO	OR	OFF	2021/03/08 21:22
S154	19	("20070137591" | "2398437" | "3911956" | "4323046" | "4375795" | "4471805" | "4492207" | "4750514" | "4788960" | "5934320" | "6543395" | "6591817" | "7591257" | "7802562" | "7905469" | "8042569" | "8757139" | "8944027" | "9175601").PN.	US-PGPUB; USPAT	OR	OFF	2021/03/08 22:09
S155	10	(generator) and (engine) and ((fuel near3 selector) same (second$4 near3 (outlet or output)))	US-PGPUB; USPAT; USOCR; FPRS; EPO; JPO; DERWENT	OR	ON	2021/06/15 12:17
S156	6,020	(generator) and (engine) and ((dual enar3 fuel) same (second$4 near3 (outlet or output)))	US-PGPUB; USPAT; USOCR; FPRS; EPO;	OR	ON	2021/06/15 12:19

			JPO; DERWENT			
S157	31	(generator) and (engine) and ((dual near3 fuel) same (second$4 near3 (outlet or output)))	US-PGPUB; USPAT; USOCR; FPRS; EPO; JPO; DERWENT	OR	ON	2021/06/15 12:19
S158	5	(generator) and (engine) and ((dual or second$4) near3 fuel) and ((solenoid near3 switch) same (fuel adj solenoid))	US-PGPUB; USPAT; USOCR; FPRS; EPO; JPO; DERWENT	OR	ON	2021/06/15 13:33
S159	27	(generator) and (engine) and ((dual or second$4) near3 fuel) and (fuel near3 solenoid near3 switch)	US-PGPUB; USPAT; USOCR; FPRS; EPO; JPO; DERWENT	OR	ON	2021/06/15 13:37
S160	21	(generator) and (engine) and ((dual or second$4) near3 fuel) and (fuel near3 (cut or cut-off) near3 switch)	US-PGPUB; USPAT; USOCR; FPRS; EPO; JPO; DERWENT	OR	ON	2021/06/15 14:08
S161	958	(generator) and (engine) and ((dual or second$4) near3 fuel) and (fuel near3 switch)	US-PGPUB; USPAT; USOCR; FPRS; EPO; JPO; DERWENT	OR	ON	2021/06/15 14:09
S162	348	(generator) and (engine) and (((dual or second$4) near3 fuel) same (fuel near3 switch))	US-PGPUB; USPAT; USOCR; FPRS; EPO; JPO; DERWENT	OR	ON	2021/06/15 14:10
S163	83	(engine) and (((dual or second$4) near3 fuel) same (selector near3 switch) same (fuel near3 switch))	US-PGPUB; USPAT; USOCR; FPRS; EPO; JPO; DERWENT	OR	ON	2021/06/15 14:13
S164	1,492	(engine) and (((dual or second$4) near3 fuel) same (fuel near3 switch))	US-PGPUB; USPAT; USOCR; FPRS; EPO;	OR	ON	2021/06/15 14:41

			JPO; DERWENT			
S165	0	gneerator and (engine) and (((dual or second$4) near3 fuel) same (fuel near3 switch))	US-PGPUB; USPAT; USOCR; FPRS; EPO; JPO; DERWENT	OR	ON	2021/06/15 14:41
S166	348	generator and (engine) and (((dual or second$4) near3 fuel) same (fuel near3 switch))	US-PGPUB; USPAT; USOCR; FPRS; EPO; JPO; DERWENT	OR	ON	2021/06/15 14:41
S167	14	("2006/0065216").URPN.	USPAT	OR	OFF	2021/06/15 14:59
S168	100	engine and ((fuel near3 selector) same (fuel near3 switch))	USPAT	OR	OFF	2021/06/15 17:11
S169	2	engine and ((fuel near3 selector) same (kill near3 switch))	USPAT	OR	OFF	2021/06/15 17:11
S170	4	engine and ((fuel near3 selector) same (kill near3 switch))	US-PGPUB; USPAT; USOCR; FPRS; EPO; JPO; DERWENT	OR	OFF	2021/06/15 17:11
S171	0	engine and ((dual near3 duel) same (kill near3 switch))	US-PGPUB; USPAT; USOCR; FPRS; EPO; JPO; DERWENT	OR	OFF	2021/06/15 17:12
S172	0	engine and ((dual near3 fuel) same (kill near3 switch))	US-PGPUB; USPAT; USOCR; FPRS; EPO; JPO; DERWENT	OR	OFF	2021/06/15 17:12
S173	5	engine and ((dual near3 fuel) same ((cut or cut-off) near3 switch))	US-PGPUB; USPAT; USOCR; FPRS; EPO; JPO; DERWENT	OR	OFF	2021/06/15 17:12
S174	7	("20070215223" | "4287908" | "4364370" | "4416244" | "5555873" | "7954479" | "9523497").PN.	US-PGPUB; USPAT	OR	OFF	2021/06/15 17:17

S175	10	"4306579"	US-PGPUB; USPAT	OR	OFF	2021/06/15 17:27
S176	8,655	generator and (solenoid near3 switch)	US-PGPUB; USPAT; USOCR; FPRS; EPO; JPO; DERWENT	OR	ON	2021/06/17 16:52
S177	1,022	generator and ((solenoid near3 switch) near5 (closed))	US-PGPUB; USPAT; USOCR; FPRS; EPO; JPO; DERWENT	OR	ON	2021/06/17 16:53
S178	238	generator and ((solenoid near3 switch) near5 (closed) near5 open)	US-PGPUB; USPAT; USOCR; FPRS; EPO; JPO; DERWENT	OR	ON	2021/06/17 16:53
S179	9	generator and ((solenoid near3 switch) near5 (closed) near5 (fuel))	US-PGPUB; USPAT; USOCR; FPRS; EPO; JPO; DERWENT	OR	ON	2021/06/17 16:54
S180	2	generator and ((solenoid near3 switch) same (fuel near3 mode))	US-PGPUB; USPAT; USOCR; FPRS; EPO; JPO; DERWENT	OR	ON	2021/06/17 17:09
S181	721	generator and ((solenoid near3 switch) same (fuel))	US-PGPUB; USPAT; USOCR; FPRS; EPO; JPO; DERWENT	OR	ON	2021/06/17 17:09
S182	132	generator and ((solenoid near3 switch) same (fuel near3 solenoid))	US-PGPUB; USPAT; USOCR; FPRS; EPO; JPO; DERWENT	OR	ON	2021/06/17 17:10
S183	58	generator and ((solenoid near3 switch) same (fuel near3 solenoid) same closed)	US-PGPUB; USPAT; USOCR; FPRS; EPO;	OR	ON	2021/06/17 17:23

			JPO; DERWENT			
S184	2	engine and ((solenoid near3 switch) same (fuel near3 solenoid) same closed same (first near3 mode))	US-PGPUB; USPAT; USOCR; FPRS; EPO; JPO; DERWENT	OR	ON	2021/06/17 17:27
S185	2	engine and (((fuel near3 solenoid near3 switch) near5 closed) same (first near3 mode))	US-PGPUB; USPAT; USOCR; FPRS; EPO; JPO; DERWENT	OR	ON	2021/06/17 17:28
S186	2	engine and (((fuel near3 solenoid near3 switch) near5 closed) same (selector near3 switch))	US-PGPUB; USPAT; USOCR; FPRS; EPO; JPO; DERWENT	OR	ON	2021/06/17 17:29
S187	2	engine and (((fuel near3 solenoid near3 switch) near5 closed) same (mode))	US-PGPUB; USPAT; USOCR; FPRS; EPO; JPO; DERWENT	OR	ON	2021/06/17 17:29
S188	24	engine and (((fuel near3 solenoid near3 switch) near5 closed))	US-PGPUB; USPAT; USOCR; FPRS; EPO; JPO; DERWENT	OR	ON	2021/06/17 17:29
S189	9	engine and (((solenoid near3 switch) near5 closed) same (fuel near3 solenoid) same (operator or manual))	US-PGPUB; USPAT; USOCR; FPRS; EPO; JPO; DERWENT	OR	ON	2021/06/17 18:16
S190	9	engine and (((solenoid near3 switch) near5 closed) same (fuel near3 solenoid) same (operator or manual or user))	US-PGPUB; USPAT; USOCR; FPRS; EPO; JPO; DERWENT	OR	ON	2021/06/17 18:16
S191	9	engine and (((solenoid near3 switch) near5 closed) same (fuel near3 solenoid) same (operator or manual or user))	US-PGPUB; USPAT; USOCR; FPRS; EPO;	OR	ON	2021/06/17 18:23

			JPO; DERWENT			
S192	147	(engine or generator) and ((solenoid near3 switch) same ((second$4 or dual) near3 fuel))	US-PGPUB; USPAT; USOCR; FPRS; EPO; JPO; DERWENT	OR	ON	2021/06/17 18:26
S193	23	(engine or generator) and ((solenoid adj switch) same ((second$4 or dual) near3 fuel))	US-PGPUB; USPAT; USOCR; FPRS; EPO; JPO; DERWENT	OR	ON	2021/06/17 18:27
S194	26	(engine or generator) and ((fuel near3 solenoid near3 switch) same ((second$4 or dual) near3 fuel))	US-PGPUB; USPAT; USOCR; FPRS; EPO; JPO; DERWENT	OR	ON	2021/06/17 18:33
S195	0	((fuel near3 solenoid near3 switch) same operator same ((second$4 or dual) near3 fuel))	US-PGPUB; USPAT; USOCR; FPRS; EPO; JPO; DERWENT	OR	ON	2021/06/17 18:36
S196	0	((fuel near3 solenoid near3 switch) same user same ((second$4 or dual) near3 fuel))	US-PGPUB; USPAT; USOCR; FPRS; EPO; JPO; DERWENT	OR	ON	2021/06/17 18:37
S197	48	(engine or generator) and ((fuel near3 (cut$4 or cut-off or stop) near3 switch) same ((second$4 or dual) near3 fuel))	US-PGPUB; USPAT; USOCR; FPRS; EPO; JPO; DERWENT	OR	ON	2021/06/17 18:37

6/18/2021 4:03:38 PM
C:\Users\shasan2\Documents\EAST\Custom Office Templates\EAST\Workspaces\Dual Fuel Selector Switch 14069747.wsp

Doc code: IDS
Doc description: Information Disclosure Statement (IDS) Filed

PTO/SB/08a (02-18)
Approved for use through 11/30/2020. OMB 0651-0031
U.S. Patent and Trademark Office; U.S. DEPARTMENT OF COMMERCE
Under the Paperwork Reduction Act of 1995, no persons are required to respond to a collection of information unless it contains a valid OMB control number.

INFORMATION DISCLOSURE STATEMENT BY APPLICANT

(Not for submission under 37 CFR 1.99)

Application Number	16789722
Filing Date	2020-02-13
First Named Inventor	Mark J. Sarder et al.
Art Unit	3747
Examiner Name	Syed O. Hasan
Attorney Docket Number	CET1090.075

U.S.PATENTS Remove

Examiner Initial*	Cite No	Patent Number	Kind Code[1]	Issue Date	Name of Patentee or Applicant of cited Document	Pages,Columns,Lines where Relevant Passages or Relevant Figures Appear
	1	4287908		1981-09-08	Storgard	
	2	4364370		1982-12-21	Smith et al.	
	3	4416244		1983-11-22	McDonald	
	4	5555873		1996-09-17	Nolen	
	5	7954479	B2	2011-06-07	Kojima et al.	
	6	9523497	B2	2016-12-20	Deng	

If you wish to add additional U.S. Patent citation information please click the Add button. Add

U.S.PATENT APPLICATION PUBLICATIONS Remove

Examiner Initial*	Cite No	Publication Number	Kind Code[1]	Publication Date	Name of Patentee or Applicant of cited Document	Pages,Columns,Lines where Relevant Passages or Relevant Figures Appear

INFORMATION DISCLOSURE STATEMENT BY APPLICANT (Not for submission under 37 CFR 1.99)		
	Application Number	16789722
	Filing Date	2020-02-13
	First Named Inventor	Mark J. Sarder et al.
	Art Unit	3747
	Examiner Name	Syed O. Hasan
	Attorney Docket Number	CET1090.075

	1	20070215223	A1	2007-09-20	Morris

If you wish to add additional U.S. Published Application citation information please click the Add button. Add

FOREIGN PATENT DOCUMENTS Remove

Examiner Initial*	Cite No	Foreign Document Number[3]	Country Code[2] i	Kind Code[4]	Publication Date	Name of Patentee or Applicant of cited Document	Pages,Columns,Lines where Relevant Passages or Relevant Figures Appear	T[5]
	1	1826377	EP	A2	2007-08-29	Rotarex Star		
	2	2510660	FR	A1	1983-02-04	Stetter SA		
	3	H0466743	JP	A	1992-03-03	Suzuki Motor Co		
	4	1999001659	WO	A1	1999-01-14	Bailey		
	5	2007048633	WO	A1	2007-05-03	Dirnhofer		
	6	2220679	FR	A1	1974-10-04	Servequip		

If you wish to add additional Foreign Patent Document citation information please click the Add button Add

NON-PATENT LITERATURE DOCUMENTS Remove

Examiner Initials*	Cite No	Include name of the author (in CAPITAL LETTERS), title of the article (when appropriate), title of the item (book, magazine, journal, serial, symposium, catalog, etc), date, pages(s), volume-issue number(s), publisher, city and/or country where published.	T[5]

ALL REFERENCES CONSIDERED EXCEPT WHERE LINED THROUGH. /S.O.H/

INFORMATION DISCLOSURE STATEMENT BY APPLICANT (Not for submission under 37 CFR 1.99)		
	Application Number	16789722
	Filing Date	2020-02-13
	First Named Inventor	Mark J. Sarder et al.
	Art Unit	3747
	Examiner Name	Syed O. Hasan
	Attorney Docket Number	CET1090.075

	1	

If you wish to add additional non-patent literature document citation information please click the Add button Add

EXAMINER SIGNATURE

Examiner Signature	/SYED O HASAN/	Date Considered	06/18/2021

*EXAMINER: Initial if reference considered, whether or not citation is in conformance with MPEP 609. Draw line through a citation if not in conformance and not considered. Include copy of this form with next communication to applicant.

[1] See Kind Codes of USPTO Patent Documents at www.USPTO.GOV or MPEP 901.04. [2] Enter office that issued the document, by the two-letter code (WIPO Standard ST.3). [3] For Japanese patent documents, the indication of the year of the reign of the Emperor must precede the serial number of the patent document. [4] Kind of document by the appropriate symbols as indicated on the document under WIPO Standard ST.16 if possible. [5] Applicant is to place a check mark here if English language translation is attached.

INFORMATION DISCLOSURE STATEMENT BY APPLICANT (Not for submission under 37 CFR 1.99)		
	Application Number	16789722
	Filing Date	2020-02-13
	First Named Inventor	Mark J. Sarder et al.
	Art Unit	3747
	Examiner Name	Syed O. Hasan
	Attorney Docket Number	CET1090.075

CERTIFICATION STATEMENT

Please see 37 CFR 1.97 and 1.98 to make the appropriate selection(s):

That each item of information contained in the information disclosure statement was first cited in any communication from a foreign patent office in a counterpart foreign application not more than three months prior to the filing of the information disclosure statement. See 37 CFR 1.97(e)(1).

OR

☐ That no item of information contained in the information disclosure statement was cited in a communication from a foreign patent office in a counterpart foreign application, and, to the knowledge of the person signing the certification after making reasonable inquiry, no item of information contained in the information disclosure statement was known to any individual designated in 37 CFR 1.56(c) more than three months prior to the filing of the information disclosure statement. See 37 CFR 1.97(e)(2).

See attached certification statement.

☒ The fee set forth in 37 CFR 1.17 (p) has been submitted herewith.

A certification statement is not submitted herewith.

SIGNATURE

A signature of the applicant or representative is required in accordance with CFR 1.33, 10.18. Please see CFR 1.4(d) for the form of the signature.

Signature	/Andrew C. Stark/	Date (YYYY-MM-DD)	2021-06-02
Name/Print	Andrew C. Stark	Registration Number	65742

This collection of information is required by 37 CFR 1.97 and 1.98. The information is required to obtain or retain a benefit by the public which is to file (and by the USPTO to process) an application. Confidentiality is governed by 35 U.S.C. 122 and 37 CFR 1.14. This collection is estimated to take 1 hour to complete, including gathering, preparing and submitting the completed application form to the USPTO. Time will vary depending upon the individual case. Any comments on the amount of time you require to complete this form and/or suggestions for reducing this burden, should be sent to the Chief Information Officer, U.S. Patent and Trademark Office, U.S. Department of Commerce, P.O. Box 1450, Alexandria, VA 22313-1450. DO NOT SEND FEES OR COMPLETED FORMS TO THIS ADDRESS. **SEND TO: Commissioner for Patents, P.O. Box 1450, Alexandria, VA 22313-1450.**

Privacy Act Statement

The Privacy Act of 1974 (P.L. 93-579) requires that you be given certain information in connection with your submission of the attached form related to a patent application or patent. Accordingly, pursuant to the requirements of the Act, please be advised that: (1) the general authority for the collection of this information is 35 U.S.C. 2(b)(2); (2) furnishing of the information solicited is voluntary; and (3) the principal purpose for which the information is used by the U.S. Patent and Trademark Office is to process and/or examine your submission related to a patent application or patent. If you do not furnish the requested information, the U.S. Patent and Trademark Office may not be able to process and/or examine your submission, which may result in termination of proceedings or abandonment of the application or expiration of the patent.

The information provided by you in this form will be subject to the following routine uses:

1. The information on this form will be treated confidentially to the extent allowed under the Freedom of Information Act (5 U.S.C. 552) and the Privacy Act (5 U.S.C. 552a). Records from this system of records may be disclosed to the Department of Justice to determine whether the Freedom of Information Act requires disclosure of these record s.

2. A record from this system of records may be disclosed, as a routine use, in the course of presenting evidence to a court, magistrate, or administrative tribunal, including disclosures to opposing counsel in the course of settlement negotiations.

3. A record in this system of records may be disclosed, as a routine use, to a Member of Congress submitting a request involving an individual, to whom the record pertains, when the individual has requested assistance from the Member with respect to the subject matter of the record.

4. A record in this system of records may be disclosed, as a routine use, to a contractor of the Agency having need for the information in order to perform a contract. Recipients of information shall be required to comply with the requirements of the Privacy Act of 1974, as amended, pursuant to 5 U.S.C. 552a(m).

5. A record related to an International Application filed under the Patent Cooperation Treaty in this system of records may be disclosed, as a routine use, to the International Bureau of the World Intellectual Property Organization, pursuant to the Patent Cooperation Treaty.

6. A record in this system of records may be disclosed, as a routine use, to another federal agency for purposes of National Security review (35 U.S.C. 181) and for review pursuant to the Atomic Energy Act (42 U.S.C. 218(c)).

7. A record from this system of records may be disclosed, as a routine use, to the Administrator, General Services, or his/her designee, during an inspection of records conducted by GSA as part of that agency's responsibility to recommend improvements in records management practices and programs, under authority of 44 U.S.C. 2904 and 2906. Such disclosure shall be made in accordance with the GSA regulations governing inspection of records for this purpose, and any other relevant (i.e., GSA or Commerce) directive. Such disclosure shall not be used to make determinations about individuals.

8. A record from this system of records may be disclosed, as a routine use, to the public after either publication of the application pursuant to 35 U.S.C. 122(b) or issuance of a patent pursuant to 35 U.S.C. 151. Further, a record may be disclosed, subject to the limitations of 37 CFR 1.14, as a routine use, to the public if the record was filed in an application which became abandoned or in which the proceedings were terminated and which application is referenced by either a published application, an application open to public inspections or an issued patent.

9. A record from this system of records may be disclosed, as a routine use, to a Federal, State, or local law enforcement agency, if the USPTO becomes aware of a violation or potential violation of law or regulation.

PTO/SB/06 (09-11)
Approved for use through 1/31/2014. OMB 0651-0032
U.S. Patent and Trademark Office; U.S. DEPARTMENT OF COMMERCE
Under the Paperwork Reduction Act of 1995, no persons are required to respond to a collection of information unless it displays a valid OMB control number.

PATENT APPLICATION FEE DETERMINATION RECORD

Substitute for Form PTO-875

Application or Docket Number	Filing Date	
16/789,722	02/13/2020	☐ To be Mailed

ENTITY: ☐ LARGE ☑ SMALL ☐ MICRO

APPLICATION AS FILED - PART I

FOR	(Column 1) NUMBER FILED	(Column 2) NUMBER EXTRA		RATE ($)	FEE ($)
☐ BASIC FEE (37 CFR 1.16(a), (b), or (c))	N/A	N/A		N/A	
☐ SEARCH FEE (37 CFR 1.16(k), (i), or (m))	N/A	N/A		N/A	
☐ EXAMINATION FEE (37 CFR 1.16(o), (p), or (q))	N/A	N/A		N/A	
TOTAL CLAIMS (37 CFR 1.16(i))	minus 20 =	*		x $50 =	
INDEPENDENT CLAIMS (37 CFR 1.16(h))	minus 3 =	*		x $230 =	
☐ APPLICATION SIZE FEE (37 CFR 1.16(s))	If the specification and drawings exceed 100 sheets of paper, the application size fee due is $310 ($155 for small entity) for each additional 50 sheets or fraction thereof. See 35 U.S.C. 41(a)(1)(G) and 37 CFR 1.16(s).				
☐ MULTIPLE DEPENDENT CLAIM PRESENT (37 CFR 1.16(j))					
* If the difference in column 1 is less than zero, enter "0" in column 2.				TOTAL	

APPLICATION AS AMENDED - PART II

AMENDMENT	06/11/2021	(Column 1) CLAIMS REMAINING AFTER AMENDMENT		(Column 2) HIGHEST NUMBER PREVIOUSLY PAID FOR	(Column 3) PRESENT EXTRA		RATE ($)	ADDITIONAL FEE ($)
	Total (37 CFR 1.16(i))	* 17	Minus	** 20	= 0		x $50 =	0
	Independent (37 CFR 1.16(h))	* 2	Minus	*** 3	= 0		x $240 =	0
	☐ Application Size Fee (37 CFR 1.16(s))							
	☐ FIRST PRESENTATION OF MULTIPLE DEPENDENT CLAIM (37 CFR 1.16(j))							
							TOTAL ADD'L FEE	0

AMENDMENT		(Column 1) CLAIMS REMAINING AFTER AMENDMENT		(Column 2) HIGHEST NUMBER PREVIOUSLY PAID FOR	(Column 3) PRESENT EXTRA		RATE ($)	ADDITIONAL FEE ($)
	Total (37 CFR 1.16(i))	*	Minus	**	=		x $0 =	
	Independent (37 CFR 1.16(h))	*	Minus	***	=		x $0 =	
	☐ Application Size Fee (37 CFR 1.16(s))							
	☐ FIRST PRESENTATION OF MULTIPLE DEPENDENT CLAIM (37 CFR 1.16(j))							
							TOTAL ADD'L FEE	

* If the entry in column 1 is less than the entry in column 2, write "0" in column 3.	LIE
** If the "Highest Number Previously Paid For" IN THIS SPACE is less than 20, enter "20".	/DENISE HOPKINS/
*** If the "Highest Number Previously Paid For" IN THIS SPACE is less than 3, enter "3".	
The "Highest Number Previously Paid For" (Total or Independent) is the highest number found in the appropriate box in column 1.	

This collection of information is required by 37 CFR 1.16. The information is required to obtain or retain a benefit by the public which is to file (and by the USPTO to process) an application. Confidentiality is governed by 35 U.S.C. 122 and 37 CFR 1.14. This collection is estimated to take 12 minutes to complete, including gathering, preparing, and submitting the completed application form to the USPTO. Time will vary depending upon the individual case. Any comments on the amount of time you require to complete this form and/or suggestions for reducing this burden, should be sent to the Chief Information Officer, U.S. Patent and Trademark Office, U.S. Department of Commerce, P.O. Box 1450, Alexandria, VA 22313-1450. DO NOT SEND FEES OR COMPLETED FORMS TO THIS ADDRESS. **SEND TO: Commissioner for Patents, P.O. Box 1450, Alexandria, VA 22313-1450.**

If you need assistance in completing the form, call 1-800-PTO-9199 and select option 2.

Customer No. 26629
Confirmation No. 9989

Patent
Attorney Docket No. CET1090.075

IN THE UNITED STATES PATENT AND TRADEMARK OFFICE

In re Application of	:	Sarder et al.
Serial No.	:	16/789,722
Filed	:	February 13, 2020
For	:	DUAL FUEL SELECTOR SWITCH
Group Art No.	:	3747
Examiner	:	Syedo Hasan

CERTIFICATION UNDER 37 CFR 1.8(a) and 1.10

I hereby certify that, on the date shown below, this correspondence is being:

Mailing

□ deposited with the US Postal Service in an envelope addressed to Commissioner for Patents, P.O. Box 1450, Alexandria, VA 22313-1450

37 CFR 1.8(a) **37 CFR 1.10**

□ with sufficient postage as first class mail □ As "Express Mail Post Office to Addressee" Mailing Label No.

Transmission

□ transmitted by facsimile to Fax No.: 571-273-8300 addressed to **Examiner Syed O. Hasan** at the Patent and Trademark Office.

■ transmitted by EFS-WEB addressed to **Examiner Syed O. Hasan** at the Patent and Trademark Office.

Date: June 11, 2021 /Robyn L. Templin/
Signature

Commissioner for Patents
P.O. Box 1450
Alexandria, VA 22313-1450

AMENDMENT/RESPONSE TO OFFICE ACTION
MAILED MARCH 11, 2021

Dear Sir:

Responsive to the Office Action mailed March 11, 2021, please amend the Application as follows and consider the following remarks:

In the Claims

1. (Original) A fuel selector for use with a dual fuel generator, the fuel selector comprising:

a valve assembly fluidly connected to each of a first fuel source and a second fuel source, the valve assembly being operable to selectively control a first fuel flow and a second fuel flow from the first fuel source and the second fuel source, respectively, to an engine of the dual fuel generator; and

a selector switch positioned on the valve assembly to allow a user to manually select one of the first fuel flow and the second fuel flow;

wherein the valve assembly comprises:

two fuel inputs, with a first fuel input connected to the first fuel source and a second fuel input connected to the second fuel source; and

two fuel outputs for selectively supplying fuel to the engine from the first fuel source or the second fuel source.

2. (Original) The fuel selector of claim 1 wherein the two fuel outputs selectively supply fuel to the engine from only one of the first fuel source or the second fuel source, responsive to selection of the first fuel flow or the second fuel flow via the selector switch, and a corresponding operation of the valve assembly.

3. (Original) The fuel selector of claim 1 wherein the valve assembly comprises:

a first fuel valve having open and closed positions to selectively control the first fuel flow to the engine; and

a second fuel valve having open and closed positions to selectively control the second fuel flow to the engine.

4. (Original) The fuel selector of claim 3 wherein the first fuel valve and the second fuel valve are non-solenoid, mechanical valves.

5. (Currently Amended) The fuel selector of claim 3~~2~~ wherein the selector switch provides for manual actuation of the first fuel valve and the second fuel valve between the open and closed positions.

Champion - EX2109, Page 145 of 403
Generac Power Systems, Inc. et al v. Champion Power Equip., Inc.
IPR2025-01438

6. (Original) The fuel selector of claim 1 further comprising a carburetor solenoid switch configured to activate an associated carburetor solenoid when actuated.

7. (Original) The fuel selector of claim 6 wherein, when the selector switch is in a first position, the selector switch actuates the carburetor solenoid switch, so as to activate the carburetor solenoid and stop the second fuel flow to the engine.

8. (Currently Amended) The fuel selector of claim 7~~6~~ wherein, when the selector switch is in a second position, the carburetor solenoid allows the second fuel flow to the engine.

9. (Original) The fuel selector of claim 1 wherein the first fuel source is a liquefied petroleum gas (LPG) fuel source and wherein the second fuel source is a gasoline source.

10. (Original) A fuel selector of a dual fuel generator comprising:

a selector switch having a first fuel mode and a second fuel mode;

a solenoid switch having open and closed positions; and

a fuel solenoid having open and closed positions;

wherein, when the selector switch is in the first fuel mode, the solenoid switch and the fuel solenoid are in the closed positions and, when the selector switch is in the second fuel mode, the solenoid switch and the fuel solenoid are in the open positions.

11. (Original) The fuel selector of claim 10 wherein the selector switch triggers the solenoid switch when changed from the second fuel mode to the first fuel mode, so as to cause the solenoid switch and the fuel solenoid to operate in the closed positions.

12. (Original) The fuel selector of claim 10 further comprising:

a valve assembly fluidly connected to each of a first fuel source and a second fuel source, the valve assembly being operable to selectively control a first fuel flow and a second fuel flow from the first fuel source and the second fuel source, respectively, to an engine of the dual fuel generator; and

wherein positioning of the selector switch in the first fuel mode and the second fuel mode enables a selection of one of the first fuel flow and the second fuel flow.

13. (Original) The fuel selector of claim 12 wherein the valve assembly is positioned on or adjacent the selector switch.

14. (Original) The fuel selector of claim 12 wherein the valve assembly comprises:

two fuel inputs, with a first fuel input connected to the first fuel source and a second fuel input connected to the second fuel source; and

two fuel outputs for selectively supplying fuel to the engine from the first fuel source or the second fuel source.

15. (Original) The fuel selector of claim 14 wherein the two fuel outputs selectively supply fuel to the engine from only one of the first fuel source or the second fuel source, responsive to selection of the first fuel flow or the second fuel flow via the selector switch and a corresponding operation of the valve assembly.

16. (Original) The fuel selector of claim 14 wherein the valve assembly comprises:

a first fuel valve having open and closed positions to selectively control the first fuel flow to the engine; and

a second fuel valve having open and closed positions to selectively control the second fuel flow to the engine.

17. (Original) The fuel selector of claim 12 wherein the first fuel source is a liquefied petroleum gas (LPG) fuel source and wherein the second fuel source is a gasoline source.

Champion - EX2109, Page 147 of 403
Generac Power Systems, Inc. et al v. Champion Power Equip., Inc.
IPR2025-01438

REMARKS

Claims 1-17 are pending in the present application. In the Office Action mailed March 11, 2021, the Examiner rejected claims 1-17 on the ground of nonstatutory double patenting as being unpatentable over claims 1, 2, 8, 17, 18, and 19 of U.S. Patent No. 10,598,101. The Examiner next rejected claims 1, 2, and 10-15 under 35 U.S.C. §102(a)(1) as being anticipated by Sugimoto et al. (US Pub. 2007/0137591). Claims 3, 5, 9, 16, and 17 were rejected under 35 U.S.C. §103 as being unpatentable over Sugimoto et al. in view of Poehlman (USP 4,489,699). Claim 6 was rejected under 35 U.S.C. §103 as being unpatentable over Sugimoto et al. in view of Mott (USP 3,696,333).

Claims 5 and 8 were objected to by the Examiner.

Claims 4, 7, and 8 were indicated as containing allowable subject matter. Such indication is appreciated.

Claim Objections

Claim 5

The Examiner objected to claim 5 due to an informality therein. According to the Examiner, "[c]laim[] 5 depends on claim 2 when it should depend on claim 3 since the valves are first recited within claim 3 and not claim 2." *Office Action*, 03/11/2021, p. 4. Without acquiescing to the objection, Applicant has amended claim 5 to change its dependency from claim 2 to claim 3. Accordingly, Applicant believes claim 5 is in condition for allowance and respectfully requests withdrawal of the objection of claim 5.

Claim 8

The Examiner objected to claim 8 due to an informality therein. According to the Examiner, "[c]laim 8 should depend on claim 7 since claim 8 mentions a second position when a first position is only mentioned before in claim 7." *Office Action*, p. 4. Without acquiescing to the objection, Applicant has amended claim 8 to change its dependency from claim 6 to claim 7. Accordingly, Applicant believes claim 8 is in condition for allowance and respectfully requests withdrawal of the objection of claim 8.

Double Patenting Rejection

The Examiner rejected claims 1-17 on the ground of nonstatutory double patenting as being unpatentable over claims 1-2, 8, 17, 18, and 19 of U.S. Patent No. 10,598,101. *Office Action*, p. 3. With respect to the pending nonstatutory double patenting rejection, Applicant notes that the double

Champion - EX2109, Page 148 of 403
Generac Power Systems, Inc. et al v. Champion Power Equip., Inc.
IPR2025-01438

patenting rejection is not the only remaining rejection in the present application. The Examiner has also applied rejections under 35 U.S.C. §102(a)(1) and §103 in the current Office Action. Applicant, therefore, requests that the double patenting rejection be held in abeyance pending resolution of the other rejections.

Rejection under 35 U.S.C. §102(a)(1) as being anticipated by Sugimoto et al.

Claim 1

The Examiner rejected claim 1 under 35 U.S.C. §102(a)(1) as being anticipated by Sugimoto et al. (US Pub. 2007/0137591) – hereinafter "Sugimoto". In rejecting the claim, the Examiner asserted (in part) that Sugimoto discloses a "fuel selector comprising: a valve assembly (assembly for valve 12, paragraph 83) fluidly connected to each of a first fuel source (Fa, 61, paragraph 71) and a second fuel source (Fb, 71, paragraph 73)" with "a selector switch (12)." *Office Action*, p. 5. The Examiner further asserted that "the valve assembly comprises: two fuel inputs (inputs from 61 and 71)…and two fuel outputs (outputs for 61 and 71) for selectively supplying fuel to the engine from the first fuel source or the second fuel source." *Id.* According to the Examiner, "the fuel sources inherently have inputs and outputs to allow the fuel to flow to the engine." *Id.* Applicant respectfully disagrees with the rejection.

Sugimoto discloses an engine generator 1 that includes a combustion engine 30, a fuel supply system Fa for supplying a fuel gas to the engine 30, an electric generator 40 to be driven for operation by the engine 30, a power control unit 41 for controlling power generated by the generator 40, and an electronic control unit (ECU) 89 for controlling the engine 30 and the fuel supply system Fa. *Sugimoto*, ¶[0042]. The fuel supply system Fa is provided with one or a plurality of fuel bottles 61, a fuel pressure regulator 62, a heating device 80, a fuel system selector valve 12, and a fuel cutoff valve 63. *Id.* at ¶[0071]. The fuel pressure regulator 62 reduces the pressure of the fuel gas supplied from the two fuel bottles 61 and from an external fuel bottle 71 and regulates the pressure of the fuel gas so that the fuel gas may be supplied to the engine 30. *Id.* at ¶[0071]. The fuel bottle 61 supplies the first fuel gas in liquid phase to the fuel pressure regulator 62. The external fuel bottle 71 supplies the second fuel gas in gas phase to the fuel gas pressure regulator 62. *Id.* at ¶[0078].

The fuel system selector valve 12 connects either the first fuel system that supplies the first fuel gas to the engine 30 or the second fuel system that supplies the second gas to the engine 30 selectively to the fuel pressure regulator 62. *Id.* at ¶[0082]. The fuel system selector valve 12 can be set in a first position, where the knob of the fuel system selector valve 12 is at a first position

marked with "Internal fuel" to connect the first fuel system to the engine 30 to supply the first fuel gas to the engine 30, in a second position, where the knob of the fuel system selector valve 12 is at a second position marked with "External fuel" to connect the second fuel system to the engine 30 to supply the second fuel gas to the engine 30, and in a cutoff position, where the knob of the fuel system selector valve 12 is at a cutoff position, where the knob of the fuel system selector valve 12 is at a neutral position marked with "Off" to stop supplying fuel gas to the engine 30 by disconnecting both the first and the second fuel system from the engine 30. *Id.* at ¶[0082]. The fuel system selector valve 12 is changed from the first to the second position and from the second to the first position via the neutral position. *Id.* at ¶[0082].

Claim 1 calls for, in part, a fuel selector for use with a dual fuel generator, the fuel selector including a valve assembly being operable to selectively control a first fuel flow and a second fuel flow from a first fuel source and a second fuel source, respectively, to an engine of the dual fuel generator. The valve assembly includes two fuel inputs, with a first fuel input connected to the first fuel source and a second fuel input connected to the second fuel source; and two fuel outputs for selectively supplying fuel to the engine from the first fuel source or the second fuel source.

Contrary to the Examiner's position, Sugimoto does not disclose that fuel system selector valve 12 is a valve assembly comprising "two fuel inputs (inputs from 61 and 71)…and two fuel outputs (outputs for 61 and 71) for selectively supplying fuel to the engine from the first fuel source or the second fuel source." *Quoting Office Action*, p. 5. Instead, Sugimoto discloses that the fuel system selector valve 12 comprises a single fuel output for supplying fuel from the first fuel system and the second fuel system to the fuel pressure regulator 62. *Sugimoto*, ¶[0082]; FIG. 1. More specifically, Sugimoto discloses that "a first fuel system for supplying the first fuel gas from the fuel bottles 61 to the engine 30 is constituted by the fuel bottles 61, a pipe A1 connecting the fuel bottles 61 to the fuel system selector valve 12, a pipe A2 connecting the fuel system selector valve 12 to the fuel pressure regulator 62," and that a "second fuel system for supplying the second fuel gas from the external fuel bottle 71 to the engine 30 is constituted by a pipe A4 connecting the connector 14 to the fuel cutoff valve 12, the pipe A2 connecting the fuel system selector valve 12 to the fuel pressure regulator 62." *Id.* at ¶[0079]; FIG. 1. Thus, the fuel system selector valve 12 comprises a single outlet coupled to pipe A2 that provides fuel from both the first fuel system and the second fuel system to the fuel pressure regulator 62. As a result, the fuel system selector valve 12 does not comprise two fuel outputs for selectively supplying fuel to the engine 30.

While the Examiners stated that "the fuel sources inherently have inputs and outputs to allow the fuel to flow to the engine" (*Office Action*, p. 5), the outputs of fuel bottles 61 and the

external fuel bottle 71 are connected to the inputs to the fuel system selector valve 12. *Sugimoto*, FIG. 1. Since the fuel system selector valve 12 selects the fuel system, the outputs of the fuel bottles 61 and the external fuel bottle 71 cannot be considered outputs of a valve assembly that selectively controls fuel to an engine. Thus, the Examiner has not shown that Sugimoto discloses a valve assembly including two fuel inputs, with a first fuel input connected to a first fuel source and a second fuel input connected to a second fuel source; and two fuel outputs for selectively supplying fuel to a generator engine from the first fuel source or the second fuel source, as called for in claim 1.

In light of at least the above, Sugimoto does not anticipate that which is called for in claim 1, as anticipation under 35 U.S.C. §102(a)(1) requires that "[t]he identical invention must be shown [in the reference] in as complete detail as is contained in the ... claim." *MPEP §2131*. Applicant therefore believes that claim 1 is patentably distinct from Sugimoto and respectfully requests withdrawal of the rejection of claim 1, along with the rejection of all claims dependent therefrom.

Claim 10

The Examiner rejected claim 10 under 35 U.S.C. §102(a)(1) as being anticipated by Sugimoto. In rejecting the claim, the Examiner asserted (in part) that Sugimoto discloses "a selector switch (12)," "a solenoid switch (74)," and "a fuel solenoid (solenoid associated with 63)," "wherein, when the selector switch is in the first fuel mode (internal fuel mode), the solenoid switch and the fuel solenoid are in the closed positions and, when the selector switch is in the second fuel mode (external fuel mode), the solenoid switch and the fuel solenoid are in the open positions." *Office Action*, p. 6. Applicant respectfully disagrees with the rejection.

Sugimoto discloses an engine generator 1 that includes a combustion engine 30, a fuel supply system Fa for supplying a fuel gas to the engine 30, an electric generator 40 to be driven for operation by the engine 30, a power control unit 41 for controlling power generated by the generator 40, and an electronic control unit (ECU) 89 for controlling the engine 30 and the fuel supply system Fa. *Sugimoto*, ¶[0042]. The fuel supply system Fa is provided with one or a plurality of fuel bottles 61 (and an external fuel bottle 71 in fuel supply system Fb), a fuel pressure regulator 62, a heating device 80, a fuel system selector valve 12, and a fuel cutoff valve 63. *Id.* at ¶[0071]. The fuel cutoff valve 63 is a normally-open solenoid valve which closes when energized, with ECU 89 controlling the fuel cutoff valve 63 on the basis of the pressure of the first fuel gas. More specifically, the fuel pressure regulator 62 is provided with a pressure sensor 73 for measuring the pressure of the first fuel gas flowing from the fuel bottle 61 to the fuel pressure regulator 62. *Id.* at

¶[0081]. When the pressure of the first fuel gas measured by the pressure sensor 73 is higher than an upper limit pressure P1, the ECU 89 closes the fuel cutoff valve 63 to disconnect the common fuel system from the fuel bottle 61. *Id.* at ¶[0081]. The upper limit pressure P1 is determined beforehand to ensure the safe operation of the engine generator 1 by avoiding the operation of the engine 30 while the pressure of the first fuel gas in the fuel bottles 61 is excessively high due to the excessive heating of the fuel bottles 61. *Id.* at ¶[0081]. Sugimoto additionally discloses that the fuel system selector valve 12 functions as switches for starting and stopping the engine 30 and controlling the ignition system and the heating device 80 – with a kill switch 74 for controlling the operation of the ignition system being opened and closed and a main switch 75 for controlling the operation of the heating device 80 being opened and closed according to the operating position of the fuel system selector valve 12. *Id.* at ¶[0083].

Claim 10 calls for a fuel selector of a dual fuel generator including a selector switch having a first fuel mode and a second fuel mode; a solenoid switch having open and closed positions; and a fuel solenoid having open and closed positions; wherein, when the selector switch is in the first fuel mode, the solenoid switch and the fuel solenoid are in the closed positions and, when the selector switch is in the second fuel mode, the solenoid switch and the fuel solenoid are in the open positions.

Sugimoto, however, does not teach or suggest that fuel cutoff valve 63 (i.e., "fuel solenoid") is in a closed position when the selector switch is in the first fuel mode and that the fuel cutoff valve 63 is in an open position when the selector switch is in the second fuel mode, as called for in claim 10. That is, Sugimoto explicitly discloses that the opening/closing of fuel cutoff valve 63 is *not* controlled by the positioning of the fuel system selector valve 12, but that instead the "fuel cutoff valve 63 is a normally-open solenoid valve which closes when energized, with ECU 89 controlling the fuel cutoff valve 63 on the basis of the pressure of the first fuel gas," that "[m]ore specifically, the fuel pressure regulator 62 is provided with a pressure sensor 73 for measuring the pressure of the first fuel gas flowing from the fuel bottle 61 to the fuel pressure regulator 62," and that "[w]hen the pressure of the first fuel gas measured by the pressure sensor 73 is higher than an upper limit pressure P1, the ECU 89 closes the fuel cutoff valve 63 to disconnect the common fuel system from the fuel bottle 61." *Sugimoto*, ¶[0081]. Thus, the fuel cutoff valve 63 in Sugimoto is moved to open/closed positions *based on a reading from the pressure sensor 73*, **not** based on the fuel system selector valve 12 being in a first/second mode, as called for in claim 10.

Further, Sugimoto has not been shown to teach or suggest a solenoid switch that is in a closed position when the selector switch is in the first fuel mode and that is in an open position

when the selector switch is in the second fuel mode, as called for in claim 10. While the Examiner stated that Sugimoto discloses a "solenoid switch (74)" (*Office Action*, p. 6), Sugimoto actually discloses a kill switch 74 that is opened and closed to control operation of an ignition system of the engine 30. *Sugimoto*, ¶[0083]. More specifically, Sugimoto discloses that "[w]hen the first fuel gas is consumed by the engine 30 and only a very small quantity of the first fuel gas is left in the fuel bottles 61, the first fuel gas needs to be cutoff and the second fuel gas needs to be supplied." *Id.* at ¶[0091]. Thus, "the fuel system selector valve 12 is set in the cutoff position to stop the engine 30. At the same time, the kill switch 74 is closed and the engine 30 can be immediately stopped." *Id.* at ¶[0091]. Considering the engine 30 is stopped when the kill switch 74 is closed, however, the Examiner has not cited to any disclosure of Sugimoto as disclosing that the kill switch 74 had different open/closed positions based upon the fuel system selector valve 12 being in a first position for internal fuel (e.g. fuel bottles 61) or a second position for external fuel (e.g. external fuel bottle 71). *Office Action*, p. 6; *Sugimoto*, FIG. 1. Accordingly, the Examiner has not shown that Sugimoto discloses a solenoid switch that is in the closed position when a selector switch is in a first fuel mode, as called for in claim 10.

In light of at least the above, Sugimoto does not anticipate that which is called for in claim 10, as anticipation under 35 U.S.C. §102(a)(1) requires that "[t]he identical invention must be shown [in the reference] in as complete detail as is contained in the ... claim." *MPEP §2131*. Applicant therefore believes that claim 10 is patentably distinct from Sugimoto and respectfully requests withdrawal of the rejection of claim 10, along with the rejection of all claims dependent therefrom.

Claim 11

The Examiner rejected dependent claim 11 under 35 U.S.C. §102(a)(1) as being anticipated by Sugimoto. In rejecting the claim, the Examiner stated that "Sugimoto discloses the fuel selector of claim 10 wherein the selector switch (12) triggers the solenoid switch (74) when changed from the second fuel mode to the first fuel mode, so as to cause the solenoid switch and the fuel solenoid to operate in the closed positions (paragraph 86)." *Office Action*, pp. 6-7. Applicant respectfully disagrees with the rejection.

Claim 11 calls for, in part, a selector switch that triggers a solenoid switch when changed from a second fuel mode to a first fuel mode, so as to cause the solenoid switch and a fuel solenoid to operate in the closed positions. With respect to claim 10, from which claim 11 depends, the Examiner referred to Sugimoto's fuel cutoff valve 63 as a "fuel Solenoid." *Office Action*, p. 6.

However, Sugimoto's fuel cutoff valve 63 is not operated by switch 74. Instead, Sugimoto discloses that switch 74 is a kill switch that operates the ignition system. *Sugimoto*, ¶[0083]. Thus, Sugimoto cannot be said to disclose triggering switch 74 so as to cause the fuel solenoid to operate in the closed position. Accordingly, the Examiner has not shown that Sugimoto discloses that fuel system selector valve 12 comprises a selector switch that triggers a solenoid switch when changed from a second fuel mode to a first fuel mode, so as to cause the solenoid switch and a fuel solenoid to operate in the closed positions, as called for in claim 11.

In light of the above, Sugimoto does not teach or suggest each and every element of claim 11. Therefore, Applicant believes claim 11 is patentably distinct from Sugimoto and respectfully requests withdrawal of the rejection of claim 11.

Rejections under 35 U.S.C. §103 over Sugimoto in view of Poehlman

Claim 3

The Examiner rejected claim 3 under 35 U.S.C. §103 as being unpatentable over Sugimoto in view of Poehlman. In rejecting claim 3, the Examiner stated that Sugimoto "is silent to disclose a first fuel valve having open and close positions to selectively control fuel flow and a second fuel valve having open and closed positions to selectively control fuel flow." *Office Action*, p. 8. The Examiner relied upon Poehlman as teaching "the use of a first solenoid fuel valve (45) with open and close positions and a second solenoid fuel valve (43) with open and closed positions (column 4, lines 21-30)." *Id.* The Examiner asserted that it would have been obvious "to modify Sugimoto by incorporating solenoid valves to provide the different fuel flows of the different fuel sources as taught by Poehlman when and [sic] operator makes a fuel source selection through valve 12 of Sugimoto." *Id.* Applicant respectfully disagrees with the rejection.

As set forth above with respect to claim 1, Sugimoto discloses a single fuel system selector valve 12 that connects either a first fuel system that supplies a first fuel gas to the engine 30 or a second fuel system that supplies a second gas to the engine 30 selectively to the fuel pressure regulator 62. *Sugimoto*, ¶[0082]; FIG. 1.

Poehlman discloses a control apparatus 11 for selectively operating an internal combustion engine 13 on a first or gaseous fuel and on a second or liquid fuel where a liquid fuel control valve 43 and gaseous fuel control valve 45 are "energized" and "deenergized" via actuation/operation of a fuel selector switch 51 between a first or gaseous fuel position and a second or liquid fuel position. *Poehlman*, col. 3, lns. 25-27; col. 4, lns. 16-30; FIG. 1.

Claim 3 calls for, in part, a valve assembly comprising a first fuel valve having open and closed positions to selectively control a first fuel flow to an engine, and a second fuel valve having open and closed positions to selectively control a second fuel flow to the engine. By dependency on claim 1, claim 3 further calls for a selector switch positioned on the valve assembly to allow a user to manually select one of the first fuel flow and the second fuel flow.

Contrary to the Examiner's assertion, it would not be obvious to modify Sugimoto by incorporating liquid fuel control valve 43 and gaseous fuel control valve 45 of Poehlman. *See Office Action*, p. 9. Initially, the single fuel system selector valve 12 of Sugimoto does not teach separate first and second fuel valves having open and closed positions, as called for in claim 3. Further, Sugimoto discloses that the single fuel system selector valve 12 selectively connects either the first fuel system or the second fuel system to the fuel pressure regulator 62. *See Sugimoto*, ¶[0082]; FIGS. 1 and 5. Thus, Sugimoto's selector valve 12 would not work for its intended purpose if the first fuel system and the second fuel system were instead selected by Poehlman's liquid fuel control valve 43 and gaseous fuel control valve 45. According to MPEP § 2143.01(V), "[i]f a proposed modification would render the prior art invention being modified unsatisfactory for its intended purpose, then there is no suggestion or motivation to make the proposed modification." *MPEP* § 2143.01(V) (citing *In re Gordon,* 733 F.2d 900, 221 USPQ 1125 (Fed. Cir. 1984)). Assuming *arguendo*, that Poehlman's liquid fuel control valve 43 and gaseous fuel control valve 45 could be incorporated into the system of Sugimoto, the fuel system selector valve 12 would not be positioned on the liquid fuel control valve 43 and gaseous fuel control valve 45 but instead would be coupled to Poehlman's primary electrical switch member 57 separate from the control valves. *See Poehlman*, FIG. 1. Thus, the combination of Sugimoto and Poehlman does not teach or suggest a selector switch positioned on a valve assembly to allow a user to manually select one of a first fuel flow and a second fuel flow; where the valve assembly comprises a first fuel valve having open and closed positions to selectively control the first fuel flow to an engine, and a second fuel valve having open and closed positions to selectively control the second fuel flow to the engine, as called for in claim 3.

Accordingly, neither Sugimoto, Poehlman, nor a combination thereof can be shown to teach, suggest, or disclose that which is called for in claim 3. Therefore, Applicant respectfully requests that the rejection of claim 3 be withdrawn, along with the rejection of all claims dependent therefrom.

Conclusion

Therefore, in light of at least the foregoing, Applicant respectfully believes that the present application is in condition for allowance. As a result, Applicant respectfully requests timely issuance of a Notice of Allowance for claims 1-17.

Applicant appreciates the Examiner's consideration of these Amendments and Remarks and cordially invites the Examiner to call the undersigned, should the Examiner consider any matters unresolved.

Respectfully submitted,

/Andrew C. Stark/

Andrew C. Stark
Registration No. 65,742
Phone 262-268-8100 ext. 15
acs@zpspatents.com

Dated: June 11, 2021
Attorney Docket No.: CET1090.075

P.O. ADDRESS:
Ziolkowski Patent Solutions Group, SC
136 South Wisconsin Street
Port Washington, WI 53074
262-268-8100

Champion - EX2109, Page 156 of 403
Generac Power Systems, Inc. et al v. Champion Power Equip., Inc.
IPR2025-01438

General Authorization and Extension of Time

The Commissioner is hereby authorized to charge any additional fees which may be required regarding this application under 37 C.F.R. §§1.16-1.17, or credit any overpayment, to Deposit Account No. 50-2623. Should no proper payment be enclosed herewith, as by credit card authorization being in the wrong amount, unsigned, post-dated, otherwise improper or informal or even entirely missing, the Commissioner is authorized to charge the unpaid amount to Deposit Account No. 50-2623. If any extensions of time are needed for timely acceptance of papers submitted herewith, Applicant hereby petitions for such extensions under 37 C.F.R. §1.136 and authorizes payment of any such extensions fees to Deposit Account No. 50-2623. Please consider this a general authorization to charge any fee that is due in this case, if not otherwise timely paid, to Deposit Account No. 50-2623.

/Andrew C. Stark/
Andrew C. Stark
Registration No. 65,742
Phone 262-268-8100 ext. 15
acs@zpspatents.com

Dated: June 11, 2021
Attorney Docket No.: CET1090.075

P.O. ADDRESS:
Ziolkowski Patent Solutions Group, SC
136 South Wisconsin Street
Port Washington, WI 53074
262-268-8100

Champion - EX2109, Page 157 of 403
Generac Power Systems, Inc. et al v. Champion Power Equip., Inc.
IPR2025-01438

UNITED STATES
PATENT AND TRADEMARK OFFICE

P.O. Box 1450
Alexandria, VA 22313 - 1450
www.uspto.gov

ELECTRONIC ACKNOWLEDGEMENT RECEIPT

APPLICATION #	RECEIPT DATE / TIME	ATTORNEY DOCKET #
16/789,722	**06/11/2021 10:55:09 AM ET**	**CET1090.075**

Title of Invention

DUAL FUEL SELECTOR SWITCH

Application Information

APPLICATION TYPE	Utility - Nonprovisional Application under 35 USC 111(a)	PATENT #	-
CONFIRMATION #	9989	FILED BY	Robyn Templin
PATENT CENTER #	60213559	FILING DATE	02/13/2020
CUSTOMER #	26629	FIRST NAMED INVENTOR	Mark J. Sarder
CORRESPONDENCE ADDRESS	-	AUTHORIZED BY	Andrew Stark

Documents

TOTAL DOCUMENTS: 3

DOCUMENT		PAGES	DESCRIPTION	SIZE (KB)
2021.06.11 Response.pdf		14	-	174 KB
2021.06.11 Response-A....pdf	(1-1)	1	Amendment/Req. Reconsideration-After Non-Final Reject	115 KB
2021.06.11 Response-CLM.pdf	(2-4)	3	Claims	87 KB
2021.06.11 Response-REM.pdf	(5-14)	10	Applicant Arguments/Remarks Made in an Amendment	134 KB

Digest

DOCUMENT	MESSAGE DIGEST(SHA-512)
2021.06.11 Response.pdf	DF9FBF25C3455676A07941F3D64BC3B3FC52FD178A57C5C32AABE0CD0522AC023194488610F094EF10FE440A56E3B3DBF9E21BF75A178758A87F07FC7ED3438B
2021.06.11 Response-A....pdf	4A80A81B2ECACC83B3F6F89221570A95FC476EC8C97EFCB74DEC1AB76524A6B52856A92D9442DB4D984720A58AF2FB06F8325A30828584FDC60E25F244556883
2021.06.11 Response-CLM.pdf	ED4D83CE43912E51E762871DD8D49D814FA64CF9F827C754515822F7018F187543CFAE702C67544ADE36083D0500978F20DDF6480EC03961EB02E735D0B06A92
2021.06.11 Response-REM.pdf	69C5DE8C1A498169C1288C146E0695E3E924321E2373813D43FFD200277AE5EE9691DB5DB1FA5BC40F49CB36847700689530EF14FCBEAD71AD728CEB0A6288D9

This Acknowledgement Receipt evidences receipt on the noted date by the USPTO of the indicated documents, characterized by the applicant, and including page counts, where applicable. It serves as evidence of receipt similar to a Post Card, as described in MPEP 503.

New Applications Under 35 U.S.C. 111

If a new application is being filed and the application includes the necessary components for filing date (see 37 CFR 1.53(b)-(d) and MPEP 506), a Filing Receipt (37 CFR 1.54) will be issued in due course and the date shown on this Acknowledgement Receipt will establish the filing date of the application

National Stage of an International Application under 35 U.S.C. 371

If a timely submission to enter the national stage of an international application is compliant with the conditions of 35 U.S.C. 371 and other applicable requirements a Form PCT/DO/EO/903 indicating acceptance of the application as a national stage submission under 35 U.S.C. 371 will be issued in addition to the Filing Receipt, in due course.

New International Application Filed with the USPTO as a Receiving Office

If a new international application is being filed and the international application includes the necessary components for an international filing date (see PCT Article 11 and MPEP 1810), a Notification of the International Application Number and of the International Filing Date (Form PCT/RO/105) will be issued in due course, subject to prescriptions concerning national security, and the date shown on this Acknowledgement Receipt will establish the international filing date of the application.

PTO/SB/08a (02-18)
Approved for use through 11/30/2020. OMB 0651-0031
U.S. Patent and Trademark Office; U.S. DEPARTMENT OF COMMERCE
Under the Paperwork Reduction Act of 1995, no persons are required to respond to a collection of information unless it contains a valid OMB control number.

INFORMATION DISCLOSURE STATEMENT BY APPLICANT

(Not for submission under 37 CFR 1.99)

Application Number	16789722
Filing Date	2020-02-13
First Named Inventor	Mark J. Sarder et al.
Art Unit	3747
Examiner Name	Syed O. Hasan
Attorney Docket Number	CET1090.075

U.S.PATENTS Remove

Examiner Initial*	Cite No	Patent Number	Kind Code[1]	Issue Date	Name of Patentee or Applicant of cited Document	Pages,Columns,Lines where Relevant Passages or Relevant Figures Appear
	1	4287908		1981-09-08	Storgard	
	2	4364370		1982-12-21	Smith et al.	
	3	4416244		1983-11-22	McDonald	
	4	5555873		1996-09-17	Nolen	
	5	7954479	B2	2011-06-07	Kojima et al.	
	6	9523497	B2	2016-12-20	Deng	

If you wish to add additional U.S. Patent citation information please click the Add button. Add

U.S.PATENT APPLICATION PUBLICATIONS Remove

Examiner Initial*	Cite No	Publication Number	Kind Code[1]	Publication Date	Name of Patentee or Applicant of cited Document	Pages,Columns,Lines where Relevant Passages or Relevant Figures Appear

INFORMATION DISCLOSURE STATEMENT BY APPLICANT (Not for submission under 37 CFR 1.99)		
	Application Number	16789722
	Filing Date	2020-02-13
	First Named Inventor	Mark J. Sarder et al.
	Art Unit	3747
	Examiner Name	Syed O. Hasan
	Attorney Docket Number	CET1090.075

	1	20070215223	A1	2007-09-20	Morris

If you wish to add additional U.S. Published Application citation information please click the Add button. Add

FOREIGN PATENT DOCUMENTS Remove

Examiner Initial*	Cite No	Foreign Document Number[3]	Country Code[2] i	Kind Code[4]	Publication Date	Name of Patentee or Applicant of cited Document	Pages,Columns,Lines where Relevant Passages or Relevant Figures Appear	T[5]
	1	1826377	EP	A2	2007-08-29	Rotarex Star		
	2	2510660	FR	A1	1983-02-04	Stetter SA		
	3	H0466743	JP	A	1992-03-03	Suzuki Motor Co		
	4	1999001659	WO	A1	1999-01-14	Bailey		
	5	2007048633	WO	A1	2007-05-03	Dirnhofer		
	6	2220679	FR	A1	1974-10-04	Servequip		

If you wish to add additional Foreign Patent Document citation information please click the Add button Add

NON-PATENT LITERATURE DOCUMENTS Remove

Examiner Initials*	Cite No	Include name of the author (in CAPITAL LETTERS), title of the article (when appropriate), title of the item (book, magazine, journal, serial, symposium, catalog, etc), date, pages(s), volume-issue number(s), publisher, city and/or country where published.	T[5]

INFORMATION DISCLOSURE STATEMENT BY APPLICANT (Not for submission under 37 CFR 1.99)	Application Number	16789722
	Filing Date	2020-02-13
	First Named Inventor	Mark J. Sarder et al.
	Art Unit	3747
	Examiner Name	Syed O. Hasan
	Attorney Docket Number	CET1090.075

	1		

If you wish to add additional non-patent literature document citation information please click the Add button Add

EXAMINER SIGNATURE

Examiner Signature		Date Considered	

*EXAMINER: Initial if reference considered, whether or not citation is in conformance with MPEP 609. Draw line through a citation if not in conformance and not considered. Include copy of this form with next communication to applicant.

[1] See Kind Codes of USPTO Patent Documents at www.USPTO.GOV or MPEP 901.04. [2] Enter office that issued the document, by the two-letter code (WIPO Standard ST.3). [3] For Japanese patent documents, the indication of the year of the reign of the Emperor must precede the serial number of the patent document. [4] Kind of document by the appropriate symbols as indicated on the document under WIPO Standard ST.16 if possible. [5] Applicant is to place a check mark here if English language translation is attached.

INFORMATION DISCLOSURE STATEMENT BY APPLICANT (Not for submission under 37 CFR 1.99)		
	Application Number	16789722
	Filing Date	2020-02-13
	First Named Inventor	Mark J. Sarder et al.
	Art Unit	3747
	Examiner Name	Syed O. Hasan
	Attorney Docket Number	CET1090.075

CERTIFICATION STATEMENT

Please see 37 CFR 1.97 and 1.98 to make the appropriate selection(s):

That each item of information contained in the information disclosure statement was first cited in any communication from a foreign patent office in a counterpart foreign application not more than three months prior to the filing of the information disclosure statement. See 37 CFR 1.97(e)(1).

OR

☐ That no item of information contained in the information disclosure statement was cited in a communication from a foreign patent office in a counterpart foreign application, and, to the knowledge of the person signing the certification after making reasonable inquiry, no item of information contained in the information disclosure statement was known to any individual designated in 37 CFR 1.56(c) more than three months prior to the filing of the information disclosure statement. See 37 CFR 1.97(e)(2).

See attached certification statement.

☒ The fee set forth in 37 CFR 1.17 (p) has been submitted herewith.

A certification statement is not submitted herewith.

SIGNATURE

A signature of the applicant or representative is required in accordance with CFR 1.33, 10.18. Please see CFR 1.4(d) for the form of the signature.

Signature	/Andrew C. Stark/	Date (YYYY-MM-DD)	2021-06-02
Name/Print	Andrew C. Stark	Registration Number	65742

This collection of information is required by 37 CFR 1.97 and 1.98. The information is required to obtain or retain a benefit by the public which is to file (and by the USPTO to process) an application. Confidentiality is governed by 35 U.S.C. 122 and 37 CFR 1.14. This collection is estimated to take 1 hour to complete, including gathering, preparing and submitting the completed application form to the USPTO. Time will vary depending upon the individual case. Any comments on the amount of time you require to complete this form and/or suggestions for reducing this burden, should be sent to the Chief Information Officer, U.S. Patent and Trademark Office, U.S. Department of Commerce, P.O. Box 1450, Alexandria, VA 22313-1450. DO NOT SEND FEES OR COMPLETED FORMS TO THIS ADDRESS. **SEND TO: Commissioner for Patents, P.O. Box 1450, Alexandria, VA 22313-1450.**

Privacy Act Statement

The Privacy Act of 1974 (P.L. 93-579) requires that you be given certain information in connection with your submission of the attached form related to a patent application or patent. Accordingly, pursuant to the requirements of the Act, please be advised that: (1) the general authority for the collection of this information is 35 U.S.C. 2(b)(2); (2) furnishing of the information solicited is voluntary; and (3) the principal purpose for which the information is used by the U.S. Patent and Trademark Office is to process and/or examine your submission related to a patent application or patent. If you do not furnish the requested information, the U.S. Patent and Trademark Office may not be able to process and/or examine your submission, which may result in termination of proceedings or abandonment of the application or expiration of the patent.

The information provided by you in this form will be subject to the following routine uses:

1. The information on this form will be treated confidentially to the extent allowed under the Freedom of Information Act (5 U.S.C. 552) and the Privacy Act (5 U.S.C. 552a). Records from this system of records may be disclosed to the Department of Justice to determine whether the Freedom of Information Act requires disclosure of these record s.

2. A record from this system of records may be disclosed, as a routine use, in the course of presenting evidence to a court, magistrate, or administrative tribunal, including disclosures to opposing counsel in the course of settlement negotiations.

3. A record in this system of records may be disclosed, as a routine use, to a Member of Congress submitting a request involving an individual, to whom the record pertains, when the individual has requested assistance from the Member with respect to the subject matter of the record.

4. A record in this system of records may be disclosed, as a routine use, to a contractor of the Agency having need for the information in order to perform a contract. Recipients of information shall be required to comply with the requirements of the Privacy Act of 1974, as amended, pursuant to 5 U.S.C. 552a(m).

5. A record related to an International Application filed under the Patent Cooperation Treaty in this system of records may be disclosed, as a routine use, to the International Bureau of the World Intellectual Property Organization, pursuant to the Patent Cooperation Treaty.

6. A record in this system of records may be disclosed, as a routine use, to another federal agency for purposes of National Security review (35 U.S.C. 181) and for review pursuant to the Atomic Energy Act (42 U.S.C. 218(c)).

7. A record from this system of records may be disclosed, as a routine use, to the Administrator, General Services, or his/her designee, during an inspection of records conducted by GSA as part of that agency's responsibility to recommend improvements in records management practices and programs, under authority of 44 U.S.C. 2904 and 2906. Such disclosure shall be made in accordance with the GSA regulations governing inspection of records for this purpose, and any other relevant (i.e., GSA or Commerce) directive. Such disclosure shall not be used to make determinations about individuals.

8. A record from this system of records may be disclosed, as a routine use, to the public after either publication of the application pursuant to 35 U.S.C. 122(b) or issuance of a patent pursuant to 35 U.S.C. 151. Further, a record may be disclosed, subject to the limitations of 37 CFR 1.14, as a routine use, to the public if the record was filed in an application which became abandoned or in which the proceedings were terminated and which application is referenced by either a published application, an application open to public inspections or an issued patent.

9. A record from this system of records may be disclosed, as a routine use, to a Federal, State, or local law enforcement agency, if the USPTO becomes aware of a violation or potential violation of law or regulation.

(12) NACH DEM VERTRAG ÜBER DIE INTERNATIONALE ZUSAMMENARBEIT AUF DEM GEBIET DES PATENTWESENS (PCT) VERÖFFENTLICHTE INTERNATIONALE ANMELDUNG

(19) Weltorganisation für geistiges Eigentum
Internationales Büro

(43) Internationales Veröffentlichungsdatum
3. Mai 2007 (03.05.2007)

PCT

(10) Internationale Veröffentlichungsnummer
WO 2007/048633 A1

(51) **Internationale Patentklassifikation:**
F02D 19/06 (2006.01) *F02M 31/16* (2006.01)
F02M 37/00 (2006.01) *F02M 55/02* (2006.01)

(21) **Internationales Aktenzeichen:** **PCT/EP2006/010380**

(22) **Internationales Anmeldedatum:**
27. Oktober 2006 (27.10.2006)

(25) **Einreichungssprache:** Deutsch

(26) **Veröffentlichungssprache:** Deutsch

(30) **Angaben zur Priorität:**
10 2005 051 743.9
28. Oktober 2005 (28.10.2005) DE
10 2006 000 621.6 2. Januar 2006 (02.01.2006) DE

(71) **Anmelder und**
(72) **Erfinder: DIRNHOFER, Rainer** [DE/DE]; An den Weihern 5, 92272 Freudenberg (DE).

(74) **Anwalt: WINTER BRANDL FÜRNISS HÜBNER RÖSS KAISER POLTE - PARTNERSCHAFT - PATENT- UND RECHTSANWALTSKANZLEI;** Alois-Steinecker-Strasse 22, 85354 Freising (DE).

(81) **Bestimmungsstaaten** *(soweit nicht anders angegeben, für jede verfügbare nationale Schutzrechtsart):* AE, AG, AL, AM, AT, AU, AZ, BA, BB, BG, BR, BW, BY, BZ, CA, CH, CN, CO, CR, CU, CZ, DK, DM, DZ, EC, EE, EG, ES, FT, GB, GD, GE, GH, GM, GT, HN, HR, HU, ID, IL, IN, IS, JP, KE, KG, KM, KN, KP, KR, KZ, LA, LC, LK, LR, LS, LT, LU, LV, LY, MA, MD, MG, MK, MN, MW, MX, MY, MZ, NA, NG, NI, NO, NZ, OM, PG, PH, PL, PT, RO, RS, RU, SC, SD, SE, SG, SK, SL, SM, SV, SY, TJ, TM, TN, TR, TT, TZ, UA, UG, US, UZ, VC, VN, ZA, ZM, ZW.

(84) **Bestimmungsstaaten** *(soweit nicht anders angegeben, für jede verfügbare regionale Schutzrechtsart):* ARIPO (BW, GH, GM, KE, LS, MW, MZ, NA, SD, SL, SZ, TZ, UG, ZM, ZW), eurasisches (AM, AZ, BY, KG, KZ, MD, RU, TJ, TM), europäisches (AT, BE, BG, CH, CY, CZ, DE, DK,

[Fortsetzung auf der nächsten Seite]

(54) **Title:** RAPE/DIESEL VALVE

(54) **Bezeichnung:** RAPS -/DIESELVENTIL

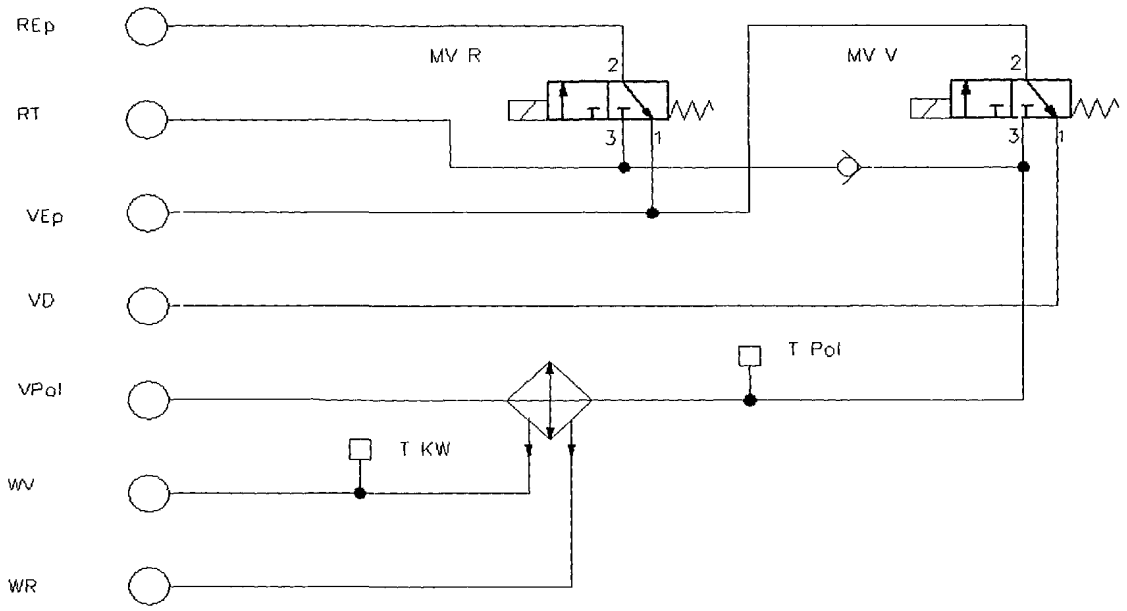

(57) **Abstract:** In an internal combustion engine which is designed for Operation with a plurality of fuels, the entire fuel supply from at least two tanks for fuels having different flow properties is controlled in a Single valve control block. One of the fuels can be used without problems only at higher temperatures than the other one and therefore has to be heated first of all. The valve control block is arranged firstly close to the engine block of the internal combustion engine and secondly in the vicinity of a heat exchanger. As a result of the compact design, the ease of both maintenance and installation of the fuel supply System is improved and the fuel which is to be heated can be heated more rapidly.

[Fortsetzung auf der nächsten Seite]

WO 2007/048633 A1

EE, ES, FI, FR, GB, GR, HU, IE, IS, IT, LT, LU, LV, MC, NL, PL, PT, RO, SE, SI, SK, TR), OAPI (BF, BJ, CF, CG, CI, CM, GA, GN, GQ, GW, ML, MR, NE, SN, TD, TG)

Veröffentlicht:

— *mit internationalem Recherchenbericht*

— *mit geänderten Ansprüchen*

Zur Erklärung der Zweibuchstaben Codes und der anderen Abkurzungen wird auf die Erklärungen ("Guidance Notes on Codes and Abbreviations") am Anfang jeder regulären Ausgabe der PCT Gazette verwiesen

(57) Zusammenfassung: In einer für den Betrieb mit mehreren unterschiedlichen Kraftstoffen ausgelegten Brennkraftmaschine wird die gesamte Kraftstoff zufuhr aus mindestens zwei Tanks für Kraftstoffe mit unterschiedlichen Fließeigenschaften in einem einzigen Ventilsteuerblock gesteuert Einer der Kraftstoffe kann erst bei höheren Temperaturen als der andere problemlos eingesetzt und muss daher zunächst aufgeheizt werden Der Ventilsteuerblock ist einerseits eng am Motorblock der Brennkraftmasσhine und andererseits in der Nahe eines Wärmetauschers angeordnet Durch den kompakten Aufbau kann sowohl die Wartungs und Montagefreundlichkeit der Kraftstof fversorgungsanlage verbessert als auch der aufzuheizende Kraftstoff schneller aufgeheizt werden

Raps-/Dieselventil

Die Erfindung betrifft eine Kraftstoffversorgungsanlage für einen Verbrennungsmotor, der wahlweise mit unterschiedlichen Kraftstoffen betreibbar ist. Kraftstoff 1 ist der vom Hersteller vorgesehene Kraftstoff, beispielsweise Diesel, für den das Fahrzeug konstruiert wurde. Kraftstoff 2 ist ein alternativer Kraftstoff (zumeist Pflanzenöl) , der bedingt durch seine physikalischen und chemischen Eigenschaften nur dann problemlos zum Einsatz kommen kann, wenn man bestimmte Betriebszustände mit Kraftstoff 1 abdeckt.

Insbesondere betrifft die Erfindung eine Kraftstoffversorgungsanlage mit einer Ventilvorrichtung zum Umschalten zwischen herkömmlichem Dieselkraftstoff und aus nachwachsenden Rohstoffen erzeugtem Kraftstoff wie Rapsöl oder anderen pflanzlichen Ölen.

Im Stand der Technik sind Vorrichtungen bekannt, um einen Motor mit unterschiedlichen Kraftstoffen, zum Beispiel Diesel und Rapsöl, zu betreiben. Würde ein herkömmlicher Selbstzündermotor nur mit Rapsöl betrieben, träte unter anderem das Problem auf, dass Rapsöl erst bei höheren Temperaturen dünnflüssig genug ist, um in einem solchen Motor in den Brennraum gefördert zu werden. Weiterhin ist das Einspritzsystem herkömmlicher Dieselmotoren nicht für zähflüssigen Kraftstoff konzipiert. Zudem gelangt, wenn der Motor kalt ist, mehr Treibstoff in das Motoröl, weil die Spaltmaße von Kolbenringen noch nicht perfekt passen-. Pflanzenöl verdampft dann aber – im Gegensatz zu Diesel – nicht mehr, so dass das Motoröl beeinträchtigt werden kann. Bei kalten Kolbenaußenwänden ist die Verbrennung schlechter. Es könnten sich bedingt durch Pflanzenöl vermehrt Ablagerungen bilden.

Erst bei einer Kraftstofftemperatur von mindestens ungefähr 60°C sind die Fließ- und Verbrennungseigenschaften von Rapsöl als einem Beispiel für pflanzliche Kraftstoffe mit denen von Diesel vergleichbar. Daher werden herkömmliche Rapsölmotoren beim Starten mit Diesel aus einem ersten Tank betrieben, bis sie warmgelaufen sind. Gleichzeitig wird mit der Abwärme der Motoren über einen Wärmetauscher ein zweiter Tank, der Rapsöl enthält, sowie die Zuführleitungen vom zweiten Tank zum Motor aufgewärmt, beispielsweise indem das Kühlwasser vom Motor den Tank und die Zuführleitungen aufheizt. Sobald die Temperatur des Rapsöls hoch genug ist, beispielsweise bei ungefähr 60°C liegt, wird die Versorgung des Motors mit Diesel gestoppt und der Motor stattdessen mit Rapsöl versorgt. Diese Umschaltung von Diesel auf Rapsöl kann von Hand vorgenommen werden, indem ein entsprechendes Ventil in der Zuführung umgelegt wird. In modernen Anlagen wird die Umschaltung automatisch durchgeführt, sobald der pflanzliche Kraftstoff aufgeheizt ist.

Neben der Fließfähigkeit ändern sich beispielsweise auch die Verbrennungseigenschaften abhängig von der Betriebstemperatur des pflanzlichen Kraftstoffes. Daher reicht es nicht aus, lediglich den Kraftstoff vorzuheizen, sondern der Motor muss zunächst mit dem Kraftstoff auf Betriebstemperatur gebracht werden, für den er ursprünglich ausgelegt wurde. Dann sind alle Bestandteile auf ideale und materialschonende Betriebsbereitschaft gebracht, und das Umschalten kann erfolgen, ohne dem Motor oder anderen Bauteilen Schaden zuzufügen.

In Fahrzeugen mit derartigen für wechselnde Kraftstoffe vorgesehenen Motoren, wie beispielsweise in der DE 38 00585 A1 oder der DE 101 54 455 A1 beschrieben, werden die Kraftstoffe über getrennte Zuleitungen mög-

liehst bis an das Einspritzsystem herangeführt. Dadurch wird eine Vermischung der Kraftstoffe weitgehend vermieden. Lediglich die Einspritzpumpe selbst und eine sehr kurze gemeinsame Zuführung zu der Pumpe muss von beiden Kraftstoffen genutzt werden. Beim Abschalten des Motors wird diese gemeinsame Zuführung wieder mit Dieselkraftstoff gespült bzw. gefüllt, um sicherzustellen, dass beim nächsten Kaltstart kein zähflüssiges Rapsöl in diesem Bereich den Durchfluss von Diesel behindert .

Speziell nach der DE 101 54 455 A1, die als nächstkommender Stand der Technik angesehen wird, gegen die der Anspruch 1 der Erfindung abgegrenzt ist, wird versucht, beide Kraftstoffe möglichst weitgehend in separaten Leitungen bis zu den Einspritzdüsen zu führen. Dies soll so weit gehen, dass für jeden Kraftstoff ein Einspritzsystem inklusive Einspritzdüse pro Zylinder vorgesehen ist, um jederzeit ohne Probleme zwischen den Kraftstoffen umschalten zu können und so das Spülen der Motoren mit Diesel nach dem eigentlichen Abschalten zu unterbinden.

Falls wie üblicherweise nur ein Einspritzsystem pro Zylinder vorhanden ist, werden die Kraftstoffe über getrennte Leitungen zu einem oder mehreren Umschaltventilen zugeführt. Von den Umschaltventilen führt eine (kurze) gemeinsame Leitung zu dem Einspritzsystem je Zylinder, wie oben beschrieben. Daher müssen für jeden Motoraufbau die Ventilanordnung, Kraftstoffleitungen und eventuelle Steuerleitungen für die automatische Umstellung der Ventile angepasst und eingebaut werden; idealerweise werden sogar zwei Einspritzsysteme pro Zylinder vorgesehen. Dies führt zu weitgehender Neukonzeption des Motors oder zumindest zu hohem Umbauaufwand. Zudem ist von Nachteil, dass derartige Systeme in der Regel mit flexiblen Schläuchen aufgebaut sind, die mehrere Zwischenstücke erforder-

lieh machen, die – zumindest bei automatisierter Montage – aufwändig zu montieren und abzudichten sind.

Daher ist es eine Aufgabe der vorliegenden Erfindung, eine Kraftstoffversorgungsanlage zu schaffen, die mindestens zwei verschiedene Kraftstoffe sicher zuführt und hilft, Leckageverluste zu vermeiden. Zudem soll der Montageaufwand deutlich reduziert werden.

Erfindungsgemäß wird diese Aufgabe dadurch gelöst, dass ein Ventilsteuerblock vorgesehen wird, in den Kraftstoffzuleitungen von den Tanks münden und der die Kraftstoffe über weitere Leitungen an die Einspritzdüsen verteilt. Alle Ventile zum Umschalten zwischen den zwei Kraftstoffen, beispielsweise von Diesel- auf Pflanzenölbetrieb, sind in diesen Block integriert.

Dadurch wird die Anzahl der Übergänge und Schlauchanschlüsse für die Kraftstoffe deutlich reduziert, so dass die Leckagegefahr durch Risse in Schläuchen und undichte Übergänge deutlich reduziert ist.

Besonders bevorzugt wird der Ventilsteuerblock mit einer Steuerung kombiniert . Diese Steuerung kann dann die Kraftstoffversorgung automatisch steuern, wie nachstehend noch genauer erläutert wird. Wenn alle Ventile zur Umschaltung zwischen den Kraftstoffen in dem stabilen Ventilsteuerblock integriert sind, kann die Steuerung über mehr oder weniger fest verlegte Leitungen die Ventile ansteuern. Besonders bevorzugt sind auch die wesentlichen Elemente der Steuerung wie eine programmierbare Recheneinheit mit Speichereinheiten mit dem Ventilsteuerblock verbunden. Diese Recheneinheit kann in der Fahrgastzelle angeordnet bzw. mit Ein- und Ausgabeeinheiten in der Fahrgastzelle verbunden sein. Hier können dem Fahrzeugführer eventuell relevante Daten angezeigt werden, beispielsweise, mit welchem Kraftstoff er gerade fährt, die

Kraftstofftemperatur, die bisherige Fahrtdauer mit diesem Kraftstoff usw. Dadurch erhält man eine sehr kompakte und sehr zuverlässige Steuerung, bei der zudem die gesamte Verdrahtung zwischen der Steuereinheit und den Ventilen in einem einzigen Kabelbaum geführt werden kann, was ebenfalls zur Montagefreundlichkeit beiträgt.

Nach einer weiter bevorzugten Ausführungsform wird der Ventilsteuerblock aus wärmeleitendem Material, beispielsweise aus Metall, hergestellt.

Durch den Ventilsteuerblock fließen, wie vorstehend erläutert, beide Kraftstoffe. Wenn der Ventilsteuerblock möglichst nahe am Motor angebracht wird, kann die Abwärme des Motors den Block aufheizen. Wenn dieser die Wärme gut leitet, heizt er folglich auch den darin befindlichen Kraftstoff auf. Dadurch wird das Aufheizen beschleunigt und es kann schneller auf den weniger fließfähigen Kraftstoff umgeschaltet werden. Ferner kann der weniger fließfähige Kraftstoff mit einer geringeren Temperatur bis zum Ventilsteuerblock gefördert werden. Dies ist möglich, weil die Zuleitungen vor dem Ventilsteuerblock größere Querschnitte aufweisen als die Zuleitungen zu den Zylindern und insbesondere in den Einspritzdüsen nach dem Steuerblock, so dass eine Verstopfung weniger wahrscheinlich ist als in den Zuleitungen zu den Zylindern und zudem diese Zuleitungen bereits beim Umrüsten auf den zweiten Kraftstoff entsprechend ausgelegt werden können.

Nach einer weiter bevorzugten Ausführungsform ist der Ventilsteuerblock möglichst nahe bei einem Wärmetauscher angeordnet, der die Aufgabe hat, den weniger fließfähigen Kraftstoff zu erwärmen.

Standardmäßig werden in Motoren zur Verbrennung weniger fließfähiger nachwachsender Rohstoffe Wärmetauscher

eingebaut, die über das Kühlwasser des Motors den Tank mit dem weniger fließfähigen Stoff vorwärmen.

Bei der vorteilhaften Ausführungsform der Erfindung findet dieses Vorwärmen direkt an dem Ventilsteuerblock und daher teilweise auch mit dessen Abwärme statt. Da der Block bereits nach kurzer Betriebszeit aufgewärmt ist, verkürzt sich die Aufwärmzeit für den Kraftstoff weiter und es kann schneller auf den weniger fließfähigen Kraftstoff umgeschaltet werden.

Nach einer weiter bevorzugten Ausführungsform weist die Kraftstoffversorgungsanlage mindestens einen Temperatursensor auf.

Wenn eine Steuerung vorhanden ist, kann diese nach einer vorab festgelegten Zeit des Warmfahrens vom Diesel- in den Rapsölbetrieb umschalten. Allerdings muss dann diese Zeit so lange bemessen sein, dass das Rapsöl auch unter ungünstigsten Bedingungen (z.B. im Winter) aufgewärmt ist. Wird dagegen die Temperatur des Kraftstoffes gemessen, kann bei günstigen Bedingungen früher und bei ungünstigen Bedingungen später umgeschaltet werden, so dass möglichst wenig Dieselkraftstoff benötigt wird. Darüber hinaus wird die Temperatur des zweiten Kraftstoffs dann ideal ermittelt, wenn sie nicht direkt im Tank, sondern erst in den Zuführleitungen, möglichst kurz vor dem Ventilsteuerblock, geprüft wird. Sobald die Prüfung ergibt, dass die Kraftstoff- (und ebenso die Motor-) Temperatur die gewünschte Temperatur erreicht hat, kann umgeschaltet werden. Dadurch reduziert man (in Verbindung mit den anderen genannten Maßnahmen wie kurzen Wegen etc. die Betriebszeit mit dem ersten Kraftstoff. Dies trägt zur schnelleren Amortisation der Anlage bei. Ist dagegen keine automatische Steuerung vorhanden, kann dem Fahrer über

den Temperatursensor signalisiert werden, dass ein Umschalten möglich ist.

Noch weiter bevorzugt kann die Kraftstoffanlage automatisch in zwei Modi, nämlich einem Modus mit geschlossenem und einem Modus mit offenem Kreislauf mit Pflanzenöl betrieben werden.

Grundsätzlich werden Benzin- und Dieselmotoren herkömmlich in einem offenen Kreislauf betrieben, das heißt, Kraftstoff wird aus dem (drucklosen) Tank von einer Pumpe unter einem geringen Druck in einen Umlauf gefördert, aus dem der benötigte Kraftstoff entnommen wird. Der nicht benötigte Kraftstoff fließt wieder in den Tank zurück und führt dabei zusätzlich etwas Wärme aus dem Motor ab. Rapsölmotoren, die auf eine gute Erwärmung des Kraftstoffes angewiesen sind, werden dagegen herkömmlich in einem geschlossenen Kreislauf betrieben. Dabei zirkuliert das Pflanzenöl in einer Leitung im Motor, und nur das verbrauchte Öl wird von der Kraftstoffpumpe in diesen Kreislauf zugeführt. Dadurch erwärmt sich das Öl im Kreislauf sicher auf die benötigte Temperatur; das Pflanzenöl im Tank wird dagegen nur durch den Wärmetauscher erwärmt. Allerdings besteht bei dem geschlossenen Kreislauf die Gefahr, dass an undichten Stellen Luft in den Kreislauf gelangt, was zu Zündaussetzern und schließlich zum Liegenbleiben des Fahrzeugs führt. Durch Spülen des Kreislaufes muss in einem solchen Fall die Luft ersetzt werden.

Erfindungsgemäß wird der Motor beim Umschalten in den Pflanzenölbetrieb ebenfalls zunächst im geschlossenen Kreislauf betrieben. Aufgrund der vorstehend beschriebenen Effekte bezüglich Wärmeleitung, Kompaktheit und Integration wird jedoch erfindungsgemäß der Kraftstoff besser als im Stand der Technik erwärmt. Zudem wird die Tem-

peratur des Kraftstoffs im Umlauf gemessen. Daher kann automatisch auf den offenen Umlauf umgeschaltet werden, wenn die Pflanzenöltemperatur ausreichend hoch, d.h. um einen Sicherheitsfaktor höher als der Wert für die Fahrt mit Öl im geschlossenen Umlauf ist. Dadurch wird das Öl im Tank erwärmt, und der (ebenfalls Leistung benötigende) Wärmetauscher kann eventuell abgestellt werden. Fällt die Öltemperatur durch diese Maßnahmen zu stark, wird (automatisch) im geschlossenen Kreislauf weitergefahren. Durch die Fahrt im offenen Kreislauf wird zuverlässig Luft aus dem System entfernt, so dass die Zuverlässigkeit höher wird.

Nach einer weiter bevorzugten Ausführungsform weist die Kraftstoffversorgungsanlage starre Kraftstoffleitungen zwischen dem Ventilsteuerblock und der Brennkraftmaschine auf, die noch weiter bevorzugt eng am Zylinderblock anliegend angeordnet sind.

Während im Stand der Technik kurze, flexible Leitungen zwischen den einzelnen Ventilen und den Zylindern sowie lange, flexible Leitungen von den Tanks zu den Zylindern verwendet werden, wird nach dieser bevorzugten Ausführungsform der Erfindung mit festen Rohren gearbeitet, die idealerweise am Motorblock oder am Zylinderkopf anliegen. Die festen, beispielsweise aus Metall gefertigten Rohre können die Wärme des Motors gut aufnehmen. Zudem sind sie eng am Motor anliegend gegen Fahrtwind und andere kühlende Einflüsse geschützt. Dadurch wird der Kraftstoff in den Rohren schnell erwärmt. Dies wurde im Stand der Technik bisher aus zwei Gründen nicht verwirklicht: Zum einen werden herkömmlich flexible Kunststoffschlauche verwendet, um bei einer Nachrüstung von Hand mehrere ähnliche Motoren umrüsten zu können, wobei die Automatisierbarkeit keine Rolle spielt, dafür aber mit ähnlichen Bauteilen unterschiedliche Abstände zwischen

Teilen des Einspritzsystems realisiert werden können, und zum zweiten ist vor allem von Ottomotoren bekannt, dass der in zu heißen Zuleitungen befindliche Kraftstoff Gasblasen bildet, die die Versorgung des Motors behindern können. Diese Gefahr besteht jedoch bei den hier bevorzugt verwendeten Kraftstoffen Rapsöl und Diesel nicht, so dass eine effektive Aufheizung des Kraftstoffs möglich ist. Die festen Rohre sind bei automatisierter Montage, beispielsweise bei einem serienmäßigen Einbau, deutlich einfacher handhabbar und praktisch wartungsfrei, da die bei Schläuchen möglichen Leckstellen weitgehend vermieden werden .

Wie vorstehend beschrieben, arbeitet die erfindungsgemäße Kraftstoffversorgungsanlage idealerweise gemeinsam mit einer Steuervorrichtung.

Nach einer bevorzugten Ausführungsform übernimmt die Steuervorrichtung der Kraftstoffanlage den kompletten Betrieb zum Umschalten von einem Kraftstoff auf den anderen. Insbesondere veranlasst die Steuervorrichtung, dass die Kraftstoffleitungen beim Abstellen des Motors nach Betrieb mit dem weniger fließfähigen Kraftstoff mit dem fließfähigen Kraftstoff gespült werden, um sicherzustellen, dass der Motor beim darauffolgenden Kaltstart problemlos starten kann.

Nach einer weiter bevorzugten Ausführungsform kann das Spülen wie im Stand der Technik durch den Fahrer ausgelöst werden, der einen Wahlschalter in der Fahrerkabine betätigt .

Wenn der Fahrer beabsichtigt, demnächst eine längere Rast einzulegen, bei der der Motor abkühlt, kann er die Spülung rechtzeitig selbst auslösen. Dann können die Zuleitungen noch während der Fahrt gespült werden, so dass

keine Nachlaufzeit des Motors zu diesem Zweck nötig ist. Dazu kann dem Fahrer ein einbauspezifischer Wert, wie lange Diesel durchgespült werden muss, mitgeteilt werden. Stellt der Fahrer das Fahrzeug ohne vorheriges (oder nach nicht ausreichendem) Spülen ab, sorgt die Steuerung dafür, dass der Motor weiterläuft, bis das System gespült ist und problemlos wieder starten kann.

Umgekehrt kann es auch zweckmäßig sein, wenn der Fahrer veranlassen kann, dass das Spülen beim Abstellen des Motors unterdrückt wird, wenn nur eine kurze Pause zu erwarten ist, beispielsweise an einem geschlossenen Bahnübergang. Daher kann der Fahrer nach einer weiter bevorzugten Ausführungsform der Kraftstoffversorgungsanlage über einen Wahlschalter das Spülen (zunächst) umgehen.

Nach einer noch weiter bevorzugten Ausführungsform überwacht dabei die Steuerung die Kraftstofftemperatur und führt das Spülen trotz der Unterdrückung selbständig durch, falls die Temperatur unter einen bestimmten Wert fällt, d.h. die Gefahr besteht, dass sich die Fließfähigkeit verschlechtert, so dass der Motor nicht mehr gestartet werden kann.

Vorteilhafte Weiterbildungen finden sich in weiteren Unteransprüchen .

Die Erfindung wird nachfolgend anhand eines Ausführungsbeispiels unter Bezugnahme auf die Zeichnung näher erläutert .

Fig. 1 zeigt einen Hydraulikschaltplan für das Ausführungsbeispiel der Erfindung.

Fig. 2 zeigt ein Ablaufdiagramm einer bevorzugten Ausführungsforms der erfindungsgemäßen Steuerung.

Die Figuren 3 bis 9 zeigen Ablaufpläne von Unterprogrammen des Hauptprogramms nach Fig. 2.

Als Ausführungsbeispiel wird, wie vorstehend erwähnt, ein Fahrzeug mit Dieselmotor verwendet, das zum Betrieb mit Rapsöl als Alternativkraftstoff umgerüstet wurde.

Beim Start des Fahrzeugs sind beide Ventile zunächst stromlos. Dadurch fließt Diesel vom Tankanschluss VD des Ventilsteuerblocks über die Anschlüsse 1 und 3 des MV V und den Anschluss VEp des Ventilsteuerblocks in Richtung des Einspritzsystems bzw. der Einspritzpumpe. Wie im Stand der Technik wird der Einspritzpumpe über diesen Vorlauf eine größere Menge an Diesel angeboten, als sie benötigt. Der überschüssige Dieselkraftstoff fließt aus dem Rücklauf des Einspritzsystems sowie die Anschlüsse 2 und 1 des MV R im sogenannten „geschlossenen Kreislauf" über den Anschluss REp des Ventilsteuerblocks.

Wenn der Motor betriebswarm ist, wird das MV V umgeschaltet (bestromt). Dadurch wird die Zufuhr von Dieselkraftstoff gestoppt und die Zufuhr von Rapsöl im „geschlossenen Kreislauf" (über die Anschlüsse 3 und 2 des MV V zu VEp, von dort zurück über REp und die Anschlüsse 2 und 1 des MV R) gestartet. Da das Rapsöl zu diesem Zeitpunkt in vorgewärmten Leitungen auf bereits warmen Dieselkraftstoff trifft, den es nach und nach ersetzt, erwärmt sich auch die vergleichsweise kleine Menge an Rapsöl bei stromlosem MV R im Vor- und Rücklauf des Einspritzsystems schnell in ausreichendem Maße. Das nicht verbrauchte Rapsöl zirkuliert weiter und kann daher das nachgeförderte Rapsöl, das das verbrannte Öl ersetzt, ebenfalls erwärmen. Damit steht während der Fahrt stets ausreichend warmes Rapsöl zur Verfügung.

Erhöht sich die Temperatur des Rapsöls im Ventilsteuerblock während der Fahrt weiter, kann das MV R umgeschaltet (bestromt) werden. Dann fließt das von dem Einspritzsystem nicht verbrauchte Rapsöl im „offenen Kreislauf" über die Anschlüsse 2 und 3 des MV R zurück in den Rapsöltank. Dadurch wird das im Tank befindliche Rapsöl schneller aufgeheizt als bei der alleinigen Heizung durch den Wärmetauscher. Zudem können Luftansammlungen, die durch Undichtigkeiten im vorstehend erörterten geschlossenen Kreislauf dazu führen können, dass Luft in den Zulauf zum Einspritzsystem gelangt, im offenen Kreislauf in den Tank zurückgegeben werden. Geschieht dies nicht, könnte es bei zu großen Luftblasen aufgrund einer Undichtigkeit im geschlossenen Kreislauf geschehen, dass das Einspritzsystem Luft statt Kraftstoff ansaugt und das Fahrzeug deshalb liegenbleibt.

Wenn erkannt wird, dass die Kraftstoffanläge gespült werden muss (weil der Fahrer den Motor abstellt oder einen entsprechenden Schalter der Steuerung betätigt, um anzuzeigen, dass der Motor demnächst abgestellt wird), wird das MV V stromlos geschaltet und Diesel fließt wie vorstehend beschrieben vom Anschluss 1 des MV V über den Anschluss 2 in den Umlauf zur Einspritzpumpe (Anschlüsse VEp und REp), um diesen zu spülen. Über die Anschlüsse 2 und 3 des noch bestromten MV R wird zudem der Rücklauf zum Rapstank (RT) mit Diesel gespült.

Das vorstehend erläuterte Grundprinzip kann je nach Auslegung des Motors modifiziert werden. Beispielsweise ist es möglich, das Rapsöl durch eine (nicht gezeigte) elektrische Hilfspumpe zirkulieren zu lassen, bevor das Fahrzeug startet, beispielsweise um es mittels einer (ebenfalls nicht gezeigten) Heizwendel aufzuwärmen. In diesem Fall wird das Rapsöl vom Anschluss VPöl durch den Ventilsteuerblock über das gezeigte Rückschlagventil zum

Anschluss RT gepumpt, ohne in den Umlauf des Einspritz - Systems zu gelangen, während der Umlauf mit Diesel gespült wird (beide MV stromlos) .

Falls eine solche Maßnahme bei einem gegebenen Motor nicht notwendig erscheint (weil z.Bsp. der zweite Kraftstoff im Steuerblock ausreichend erwärmt wird) , kann die Leitung über das Rückschlagventil deaktiviert bleiben bzw. einfach weggelassen werden.

Im folgenden werden mögliche Steuerungsprogramme für den vorstehend erläuterten Ventilsteuerblock anhand der Figuren 2 bis 7 erörtert.

Figur 2 zeigt den allgemeinen Ablauf der Motorüberwachung. Sobald der Fahrschalter eingeschaltet ist (S200) , wird zunächst (S300) geprüft, ob alle Bauteile der KraftstoffVersorgung normal arbeiten. Falls nicht, wird dem Fahrer im Schritt S400 eine Fehlfunktion gemeldet, beispielsweise über ein Display, eine Warnlampe und/oder ein akustisches Signal und das Programm geht wieder an den Anfang zurück .

Falls zunächst keine Fehlfunktion festgestellt wird, wird in Schritt S500 ein (nicht gezeigtes) Programm zur Drehzahlüberwachung gestartet. Dieses Programm prüft während einer vorab festgelegten Zeit, ob die Motordrehzahl über einen festgelegten Wert steigt, d.h. ob der Motor innerhalb dieser Zeit gestartet wird. Falls nicht, geht die Steuerung zum Schritt S400, um einen Fehler zu melden, und anschließend wieder wie vorstehend beschrieben zurück .

Anschließend wird der Motor im Schritt S600 auf herkömmliche Weise gestartet. Wie aus der nachfolgenden Beschreibung der Steuerung, insbesondere der Fig. 9, noch

klar wird, startet der Motor stets mit Dieselkraftstoff, d.h. beide Magnetventile sind ausgeschaltet.

Nach dem erfolgreichen Starten des Motors geht die Steuerung im Schritt S700 zum in Figur 3 gezeigten Unterprogramm zum Umschalten zwischen Kurzstrecken- und Automatikbetrieb. Dabei prüft das Programm, ob der Fahrer eine Taste „P/D" („Pflanzenöl/Diesel") der Steuerung gedrückt hat, um die Steuerung vom automatischen Umschalten auf Pflanzenöl abzuhalten, weil beispielsweise nur eine kurze Strecke zu fahren ist. Ist die Taste nicht gedrückt, geht das Programm zurück und fährt in der derzeitigen Betriebsart fort. Ist die Taste gedrückt, wird die Betriebsart in den Schritten S720 bis S740 in die jeweils andere Betriebsart umgeschaltet.

Ist im Schritt S710 beispielsweise die P/D-Taste gedrückt und wird im S720 festgestellt, dass die Steuerung im Automatikbetrieb ist, schaltet die Steuerung in den Kurzstreckenbetrieb. Dieses Umschalten wird anhand der Fig. 4 näher erläutert.

Im Schritt S731 der Fig. 4 werden beide Magnetventile MV V, MV R des Ventilsteuerblocks stromlos geschaltet. Wie vorstehend erläutert, wird der Motor daher ausschließlich mit Dieselkraftstoff versorgt. Im Schritt S732 wird geprüft, ob ein Umschalten auf Pflanzenölbetrieb möglich ist. Dazu wird (hier nicht gezeigt) der beim Automatikbetrieb erläuterte Programmschritt S742 durchgeführt. Wenn dieser Schritt ergibt, dass ein Betrieb mit Pflanzenöl möglich ist, wird im Schritt S732 jedoch nicht unmittelbar in den Pflanzenölbetrieb umgeschaltet, sondern lediglich der Fahrer beispielsweise optisch oder akustisch daran erinnert, dass ein solcher Betrieb möglich ist. Der Fahrer kann dann durch Drücken der „P/D"-Taste in den Automatikbetrieb umschalten, wie mit

Bezug auf Fig. 3 beschrieben. Im Schritt S733 geht die Steuerung zurück zum „Umschalt "-Programm.

Wird bei gedrückter P/D-Taste im Schritt S720 festgestellt, dass die Steuerung im Kurzstreckenbetrieb ist, schaltet die Steuerung in den Automatikbetrieb. Dieses Umschalten wird anhand der Fig. 5 näher erläutert.

In Fig. 5 wird im Schritt S7410 zunächst geprüft, ob die Bedingungen für Nebenantrieb oder Nurdieselbetrieb vorliegen. Diese Bedingungen liegen vor, wenn entweder ein ungünstiges Drehzahl -/Drehmomentverhältnis vorliegt („Nebenantrieb") oder beide Tanks mit Diesel gefüllt sind („Nurdieselantrieb") .

Es ist bei einem Dieselmotor zu bevorzugen, den Motor auch dann nicht im gesamten Leistungsbereich mit Pflanzenöl zu betreiben, wenn er warmgefahren ist, da sich die Verbrennungstemperaturen und damit die Verbrennungseigenschaften des Pflanzenöls ändern. Daher ist die Steuerung so angepasst, dass der Motor nur in einem für die Verbrennung von Pflanzenöl optimalen Bereich mit dem Öl betrieben wird, während er ansonsten mit Diesel betrieben wird. Beispielsweise liegt bei einem Motor zur Verbrennung von Diesel und Pflanzenöl dieser optimale Bereich der sauberen Verbrennung, besten Kompression und optimalen Haltbarkeit bei 40 bis 85 Prozent der Nennlast. Wird der Motor dagegen (im Stau oder ausschließlich zum Betrieb von Nebenaggregaten) mit minimaler Last oder (z.B. an Steigungen) mit hoher Last betrieben, ist es von Vorteil, in diesen Betriebzuständen ausschließlich mit Diesel zu fahren.

Daher prüft die Steuerung im Unterprogramm „Nebenantrieb" zunächst (Schritt *S1I1)* , ob die Drehzahl oder das Drehmoment in dem vorstehend genannten für den Pflan-

zenöleinsatz ungünstigen Bereich liegen. Dies kann durch direkten Abgriff der Daten aus dem Motormanagement erfolgen. Falls nicht, geht die Steuerung zum Schritt S7410 (Fig. 5) zurück. Liegen Drehzahl und/oder Drehmoment im genannten ungünstigen Bereich, werden im Schritt S772 beide Magnetventile ausgeschaltet. Dadurch wird der Motor mit Dieselkraftstoff versorgt. Ferner wird im Schritt S773 geprüft, ob ausreichend Pflanzenöl im Tank ist. Falls ja, wälzt die Pflanzenölpumpe das Öl um (Schritt S774), damit es warm bleibt bzw. wird, bis die ungünstigen Verbrennungsbedingungen nicht mehr vorliegen. Wenn nicht (Schritt S775), wird die Pflanzenölpumpe abgeschaltet. Anschließend kehrt das Programm zum Schritt S7410 zurück.

Ferner kann es sein, dass bei geringem Angebot an Pflanzenöl, beispielsweise bei Fahrten ins Ausland mit geringerer Dichte an Pflanzenöltankstellen oder schlicht anderen (steuerlichen) Gegebenheiten im Ausland nur mit Diesel gefahren werden soll. Für diesen Fall kann auch der (vergleichsweise große) für Pflanzenöl ausgelegte Tank mit Dieselkraftstoff befüllt werden. Diese Dieselbefüllung wird der Steuerung mitgeteilt, beispielsweise über einen Schalter am Pflanzenöltank.

Falls die beiden Tanks mit Diesel gefüllt sind, geht die Steuerung über die Schritte S7410, S7420 zum nachstehend mit Bezug auf Fig. 8 beschriebenen Nurdieselbetrieb (Schritt S780). Dieser unterscheidet sich vom „Nebenantrieb" dadurch, dass der Dieselkraftstoff aus dem für Pflanzenöl vorgesehenen Tank zugeführt wird. Daher kann auf die Vorwärmung für den Pflanzenöltank verzichtet werden. Zunächst wrd geprüft, ob der Motor abgeschaltet ist.

Ist jedoch sowohl Pflanzenöl im Tank als auch eine für den Pflanzenölbetrieb geeignete Motorlast (Dreh-

zahl/Drehmoment) vorhanden, geht die Steuerung zum Schritt S741 weiter, in dem zunächst beide Ventile MV V, MV R des Ventilsteuerblocks stromlos geschaltet sind, so dass der Motor mit Diesel läuft. Im Schritt S742 wird dann geprüft, ob die Kühlwasser temperatur KW eine Umschalttemperatur Ums, beispielsweise 60°C (zuzüglich eines eventuellen Sicherheitszuschlags Ws, beispielsweise 5°C) überschritten hat, mit anderen Worten, ob der Motor bereits warmgefahren ist. So lange die Kühlwassertemperatur zu niedrig ist, wird diese Abfrage wiederholt, d.h. das Programm geht zum Schritt S7410 zurück. Steigt die Kühlwassertemperatur über den genannten Wert, so wird im Schritt S743 das MV V eingeschaltet, d.h. Pflanzenöl wird in den Kreislauf der Einspritzpumpe zugeführt und verdrängt allmählich den zugeführten Dieselkraftstoff, wobei es weiter erwärmt wird. Im Schritt S744 prüft die Steuerung, ob eine vorab festgelegte Zeit VentzeitRü verstrichen ist, nach der nur Pflanzenöl im Einspritzsystem sein sollte. Wenn diese Zeit noch nicht verstrichen ist (JA im Schritt S744) geht das Programm zum Schritt S742 zurück, um zu prüfen, ob die Temperatur des Pflanzenöls ausreichend hoch bleibt. Bleibt die Temperatur hoch genug, bis VentzeitRü abgelaufen ist, („NEIN" im Schritt S744) geht das Programm zum Schritt S7450 und somit zum Unterprogramm „Reiner Pflanzenölbetrieb" weiter, das in Fig. 6 erläutert ist.

Im Schritt S7451 in Fig. 6 wird das MV R eingeschaltet, so dass nun Rapsöl im Zulauf der Einspritzpumpe zirkuliert. Im Schritt S7452 wird geprüft, ob die Temperatur an der Einspritzpumpe größer als eine Temperatur TRückauto zum automatischen Rückschalten in den Dieselbetrieb ist. Dies kann beispielsweise der Fall sein, wenn bei niedriger Last und hoher Wärmeabfuhr die Temperatur der Einspritzpumpe sinkt. Bei einem positiven Ergebnis dieser Abfrage wird in den in Fig. 7 beschriebenen Nebenantrieb

(Schritt S770) geschaltet, d.h. der Motor wird wie bei geringer Auslastung ausschließlich mit Diesel betrieben. Bleibt die Temperatur der Einspritzpumpe hoch genug, wird im Schritt S7453 geprüft, ob die P/D-Umschalttaste gedrückt ist, d.h., ob auf Wunsch des Fahrers in den Dieselbetrieb umgeschaltet werden soll. Der Fahrer kann dies beispielsweise wünschen, um ein späteres Spülen zu vermeiden. Ist die Taste gedrückt, geht das Programm zum Schritt S730 (Fig. 4); ansonsten geht es im S7454 zum Automatikbetrieb nach Fig. 5 zurück.

In Fig. 5 prüft das Programm dann im Schritt S746, ob der Motor auf Wunsch des Fahrers auszuschalten ist. Wenn nicht, geht das Programm zum Schritt S7450 zurück und wiederholt den Ablauf für den reinen Pflanzenölbetrieb.

Soll der Motor ausgeschaltet werden, geht das Programm im Schritt S7460 der Fig. 5 zum in Fig. 9 gezeigten Unterprogramm. In diesem Programm wird zunächst im Schritt S7461 geprüft, ob der Motor bereits ausreichend lange (ca. 1 min) im Dieselbetrieb arbeitet. Wenn ja, wird der Motor abgestellt (Schritt S7466) und das Programm beendet.

Wenn der Motor noch nicht lange genug mit Diesel betrieben wird, werden zunächst (Schritte S7462, S7463) die Pflanzenöl-Umlaufpumpe und die Magnetventile abgeschaltet, so dass dem Einspritzsystem nur noch Dieselkraftstoff zugeführt wird. Anschließend wird das Einspritzsystem für ca. eine Minute mit Dieselkraftstoff gespült (Schritt S7464), so dass kein Pflanzenöl im Einspritzsystem mehr vorhanden ist, und anschließend der Motor abgestellt (Schritt S7464). Danach (Schritt S7467) wird geprüft, ob die „Kurzstop"-Taste gedrückt wurde, d.h. der Fahrer beabsichtigt, in Kürze mit warmem Motor weiterzufahren. Falls ja, startet der Motor im Automatikbetrieb

neu, d.h. , wenn die Voraussetzungen (Wärme, Belastung etc.) erfüllt sind, wird wieder in den reinen Pflanzenöl-betrieb geschaltet. Wenn dagegen die „Kurzstop"-Taste nicht gedrückt wurde, wird das Programm beendet, d.h. der Motor startet beim nächsten Anfahren in dem herkömmlichen Steuermodus .

Weiterhin kann die Steuerung so ausgelegt sein, dass sie die Kraftstoffversorgung auf den vom Hersteller vorgesehenen Kraftstoff, beispielsweise Diesel, umschaltet, wenn die Motorlast für eine vorab bestimmte Zeit unterhalb einer vorab bestimmten Last bleibt (und/oder umgekehrt auch so, dass umgeschaltet wird, wenn die Motorlast für eine vorab bestimmte Zeit eine maximale Last überschreitet) . Statt der Motorlast, die man aus Daten eines Motormanagements erhalten kann, ist es bei einer einfacheren Ausführungsform auch möglich, ausgehend von der Motordrehzahl umzuschalten. Ein Diesel fährt am besten mit einer konstanten Last von 40-85 %, dabei hält er mit Abstand am längsten, weist die besten Verbrennungswerte, eine saubere Kompression usw. auf. Bei einer geringen Motordrehzahl, wenn beispielsweise nur Nebenaggregate des Fahrzeugs wie Klimaanlagen, Silopumpen, Betonmischer, hydraulische Anlagen usw. betrieben werden, können sich verstärkt Ablagerungen durch unvollständige Verbrennung bilden. Dies kann vermieden oder zumindest stark reduziert werden, wenn unter solchen Umständen auf den vom Hersteller vorgesehenen Kraftstoff umgeschaltet wird. Fig. 7 zeigt ein Beispiel eines Unterprogramms zu diesem Zweck. Zunächst wird von der Steuerung entweder über zusätzliche Sensoren oder über direkten Zugriff auf Motormanagementdaten festgestellt, ob die Motorlast in einem ungünstigen Bereich liegt, d.h. Drehzahl und/oder Drehmoment außerhalb des o.g. Bereichs liegen (Schritt S771) . Falls ja, werden beide Magnetventile abgeschaltet (Schritt S772) . Anschließend wird geprüft, ob mindestens

eine bestimmte Menge, beispielsweise rund 10 Prozent einer Tankfüllung an Pflanzenöl im Tank ist (Schritt S773). Falls ja, wird das Öl umgewälzt, um es mit der Abwärme des Motors aufzuwärmen (Schritt *S1lA)*. Ist die Ölmenge jedoch gering, wird die Pumpe abgeschaltet, um nicht eventuelle Verunreinigungen am Boden des Tanks aufzuwirbeln und zu fördern (Schritt S775). Anschließend kehrt das Programm zum Hauptprogramm zurück.

Natürlich ist der vorstehend beschriebene Aufbau nicht auf das Umschalten von Raps- oder anderem Pflanzenöl auf Diesel beschränkt, sondern kann bei entsprechender Anpassung für alle denkbaren Kraftstoffpaarungen eines Zweistoffmotors verwendet werden. Beispiele für weitere Kraftstoffpaarungen sind Benzin / Ethanol, Benzin / Flüssiggas, Benzin / Flüssigwasserstoff oder Flüssigwasserstoff / Flüssiggas. Obwohl bei diesen Paarungen die Probleme unterschiedlich von den hier beschriebenen sind (so muss beispielsweise wahrscheinlich nicht bei jeder dieser Paarungen gespült werden), kann das gezeigte Konzept eines Ventilsteuerblocks, in den alle zum Umschalten nötigen Ventile integriert sind und der von einer Steuereinheit angesteuert wird, vorteilhaft für verschiedene Kraftstoffpaarungen verwendet werden.

Ansprüche

1. Kraftstoffversorgungsanlage zur Versorgung einer Brennkraftmaschine über verschiedene Kraftstoffleitungen mit wahlweise einem Kraftstoff A oder einem Kraftstoff B, mit einer steuerbaren Ventilanordnung zur Umschaltung zwischen den Kraftstoffen, gekennzeichnet durch einen Ventilsteuerblock, in den die Ventilanordnung integriert ist.

2. Kraftstoffversorgungsanlage nach Anspruch 1, dadurch gekennzeichnet, dass der Ventilsteuerblock aus einem wärmeleitenden Material hergestellt ist.

3. Kraftstoffversorgungsanlage nach einem der vorhergehenden Ansprüche, dadurch gekennzeichnet, dass der Ventilsteuerblock benachbart zu einem Wärmetauscher zum Aufheizen eines der Kraftstoffe angeordnet ist.

4. Kraftstoffversorgungsanlage nach einem der vorhergehenden Ansprüche, gekennzeichnet durch eine Steuereinrichtung, welche die Kraftstoffversorgung durch Ansteuern des Ventilsteuerblocks steuert.

5. Kraftstoffversorgungsanlage nach Anspruch 4, dadurch gekennzeichnet, dass die Steuervorrichtung zumindest eine Ein-/Ausgabeeinheit aufweist, die in der Fahrgastzelle angeordnet ist.

6. Kraftstoff Versorgungsanlage nach Anspruch 4 oder 5, dadurch gekennzeichnet, dass die Steuervorrichtung veranlasst, dass mindestens eine der Kraftstoffzuleitungen vor einem endgültigen Abstellen der Brennkraftmaschine mit dem anderen Kraftstoff gespült werden.

7. Kraftstoff Versorgungsanlage nach Anspruch 6, dadurch gekennzeichnet, dass eine Spülung auch durch Drücken eines Wahlschalters in der Fahrerkabine auslösbar ist.

8. Kraftstoff Versorgungsanlage nach Anspruch 6 oder 7, dadurch gekennzeichnet, dass das Spülen durch Drücken eines Wahlschalters in der Fahrerkabine unterdrückbar ist.

9. Kraft StoffVersorgungsanlage nach Anspruch 8, dadurch gekennzeichnet, dass die Unterdrückung des Spülen automatisch aufgehoben und das Spülen durchgeführt wird, wenn ein Sensor meldet, dass die Temperatur eines der Kraftstoffe unter einen vorab festgelegten Wert gefallen ist.

10. Brennkraftmaschine mit einer Kraftstoffversorgungsanlage nach einem der vorhergehenden Ansprüche, gekennzeichnet durch mindestens einen Temperatursensor zum Feststellen der Temperatur mindestens eines Mediums, das eine Aussage über den Betriebszustand der Brennkraftmaschine zulässt.

11. Brennkraftmaschine mit einer Kraftstoffversorgungsanlage nach einem der vorhergehenden Ansprüche, gekennzeichnet durch starre Kraftstoffleitungen zwischen dem Ventilsteuerblock und der Brennkraftmaschine.

12. Brennkraftmaschine mit einer Kraftstoffversorgungsanlage nach Anspruch 11, dadurch gekennzeichnet, dass die Kraftstoffleitungen zumindest für einen der Kraftstoffe eng an einem Motorblock und/oder Zylinderkopf der Brennkraftmaschine entlang geführt werden

13. Steuervorrichtung für eine Kraftstoffversorgungsanlage nach einem der vorstehenden Ansprüche, dadurch gekennzeichnet, dass die Steuervorrichtung die Kraftstoffversorgungsanlage abhängig von der Last des Motors steuert.

14. Steuervorrichtung nach Anspruch 13, dadurch gekennzeichnet, dass die Steuervorrichtung die Last des Motors abschätzt und veranlasst, dass die Kraftstoff Versorgung umschaltet, wenn die Last des Motors für eine vorab bestimmte Zeit unterhalb einer vorab bestimmten Last liegt.

15. Steuervorrichtung nach Anspruch 13, dadurch gekennzeichnet, dass sie die Last des Motors aufgrund von Motormanagementdaten ermittelt und die Kraftstoffversorgungsanläge aufgrund der ermittelten Werte umschaltet.

16. Steuervorrichtung nach einem der Ansprüche 13 bis 15, dadurch gekennzeichnet, dass sie die Kraftstoffversorgungsanlage umschaltet, wenn nur Nebenaggregate laufen.

17. Steuervorrichtung nach einem der Ansprüche 13 bis 16, dadurch gekennzeichnet, dass sie durch Öffnen eines in der Ventilanordnung angeordneten Rücklaufventils (MV R) veranlasst, dass im Betrieb mit Kraftstoff B von der Einspritzpumpe nicht verbrauchter Kraftstoff in den entsprechenden Tank zurückgeführt wird.

18. Steuervorrichtung nach einem der Ansprüche 13 bis 17, dadurch gekennzeichnet, dass sie einem Bediener eine Möglichkeit bietet, manuell auf Kraftstoff A umzuschalten bzw. die Umschaltung auf Kraftstoff B manuell zu verhindern.

19. Steuervorrichtung nach Anspruch 18, gekennzeichnet durch eine Vorrichtung, um den Bediener daran zu erinnern, dass mit Kraftstoff B gefahren werden könnte, wenn die dafür erforderlichen Bedingungen vorliegen, der Bediener die Umschaltung auf Kraftstoff B jedoch manuell verhindert hat.

20. Steuervorrichtung nach einem der Ansprüche 13 bis 19, dadurch gekennzeichnet, dass sie zunächst ein in der Ventilanordnung angeordnetes Vorlaufventil (MV V) einschaltet, sobald ein Merkmal des Kraftstoffs B einen ersten vorab

festgelegten Wert aufweist oder überschreitet, und später das in der Ventilanordnung angeordnete Rücklaufventil (MV R) des Ventilsteuerblocks einschaltet, sobald das Merkmal des Kraftstoffs B einen zweiten vorab festgelegten Wert aufweist oder überschreitet .

21. Steuervorrichtung nach Anspruch 20, dadurch gekennzeichnet, dass sie das Umschalten des Rücklaufventils rückgängig macht, sobald das Merkmal des Kraftstoffs B den ersten vorab festgelegten Wert wieder unterschreitet.

GEÄNDERTE ANSPRÜCHE
beim Internationalen Büro eingegangen am 10 April 2007 (10.04.2007)

1. Kraftstoffversorgungsanlage zur Versorgung einer Brennkraftmaschine über verschiedene Kraftstoffl θitungen mit wahlweise einem Kraftstoff aus einem ersten Tank oder einem Kraftstoff aus einem zweiten Tank,

mit einer steuerbaren Ventilanordnung zur Umschaltung zwischen den Kraftstoffen aus dem ersten Tank und aus dem zweiten Tank,

einem Ventilsteuerblock, in den die Ventilanordnung integriert ist, und in den Kraftstoffzuleitungen von den Tanks münden und der die Kraftstoffe über weitere Leitungen an die Einspritzanlage verteilt, und

einer Steuervorrichtung zur Steuerung der Kraftstoffversorgungsanlage durch Steuern der Ventilanordnung abhängig von der Belastung des Motors, dadurch gekennzeichnet, dass

die Steuervorrichtung so aufgebaut ist, dass sie zunächst ein in der Ventilanopdnung angeordnetes Vorlaufventil (MV V) einschaltet, sobald ein Merkmal des Kraftstoffs aus dem zweiten Tank einen ersten vorab festgelegten Wert aufweist oder überschreitet, und später das in der Ventilanordnung angeordnete Rücklaufventil (MV R) des Vβntilsteuerblocks einschaltet, sobald das Merkmal des Kraftstoffs aus dem zweiten Tank einen zweiten vorab festgelegten Wert aufweist oder überschreitet.

2. Kraftstoffversorgungsanlage nach Anspruch 1, dadurch gekennzeichnet, dass sie das in der Ventilanordnung angeordnete Vorlaufventil (MV V) wieder ausschaltet, sobald ein Merkmal des Kraftstoffs aus dem zweiten Tank den ersten vorab festgelegten Wert wieder unterschreitet.

3. Kraftstoffversorgungsanlage nach Anspruch 1 oder 2, dadurch gekennzeichnet, dass die Steuervorrichtung so aufgebaut ist, dass sie das Umschalten des Rücklaufventils (MV R) rückgängig macht, sobald das Merkmal des Kraft-Stoffs aus dem zweiten Tank den zweiten vorab festgelegten Wert wieder unterschreitet

4. Kraftstoffversorgungsanlage nach einem der vorhergehenden Ansprüche, dadurch gekennzeichnet, dass der Ventilsteuerblock benachbart zu einem Wärmetauscher zum Aufheizen eines der Kraftstoffe angeordnet ist.

Champion - EX2109, Page 191 of 403
Generac Power Systems, Inc. et al v. Champion Power Equip., Inc.
IPR2025-01438

5. Kraftstoffversorgungsanlage nach einem der vorhergehenden Ansprüche, gekennzeichnet durch eine Steuereinrichtung, welche die Kraftstoffversorgung und den Ventilsteuerblock automatisch steuert.

6. Kraftstoffversorgungsanlage nach einem der vorhergehenden Ansprüche, dadurch gekennzeichnet, dass die Steuervorrichtung zumindest eine Ein-/Ausgabeeinheit mit einem Display aufweist, die in der Fahrgastzelle angeordnet ist.

7. Kraftstoffversorgungsanlage nach einem der vorhergehenden Ansprüche, dadurch gekennzeichnet, dass die Steuervorrichtung veranlasse dass mindestens das Motor-Einspritzsystem vor einem endgültigen Abstellen der Brennkraftmaschine mit dem anderen Kraftstoff gespült wird.

8. Kraftstoffversorgungsanlage nach Anspruch 7, dadurch gekennzeichnet, dass eine Spülung auch durch Drücken eines Wahlschalters in der Fahrerkabine auslösbar ist.

9. Kraftstoffversorgungsanlage nach Anspruch 7 oder 8, dadurch gekennzeichnet, dass das Spülen durch Drücken eines Wahlschalters in der Fahrerkabine unterdrückbar ist.

10. Kraftstoffversorgungsanlage nach Anspruch 9, dadurch gekennzeichnet, dass die Unterdrückung des Spülen automatisch aufgehoben und das Spülen durchgeführt wird, wenn ein Sensor meldet, dass die Temperatur eines der Kraftstoffe unter einen vorab festgelegten Wert gefallen ist.

11. Brennkraftmaschine mit einer Kraftstoffversorgungsa πlage nach einem der vorhergehenden Ansprüche, gekennzeichnet durch mindestens einen Temperatursensor zum Feststellen der Temperatur mindestens eines Mediums, das eine Aussage über den Betriebszustand der Brennkraftmaschine zulässt

12. Steuervorrichtung zur Steuerung der Kraftstoffversorgungsanlage nach einem der Ansprüche 1 bis 10, dadurch gekennzeichnet, dass die Steuervorrichtung die Last des Motors abschätzt und veranlasst, dass die Kraftstoffversorgung umschaltet, wenn die Last des Motors für eine vorab bestimmte Zeit unterhalb einer vorab bestimmten Last liegt.

Champion - EX2109, Page 192 of 403
Generac Power Systems, Inc. et al v. Champion Power Equip., Inc.
IPR2025-01438

13. Steuervorrichtung nach Anspruch 12, dadurch gekennzeichnet, dass sie die Last des Motors aufgrund von Motorrnanagementdaten ermittelt und die Kraftstoffversorgungsanlage aufgrund der ermittelten Werte umschaltet.

14. Steuervorrichtung nach einem der Ansprüche 12 oder 13, dadurch gekennzeichnet, dass sie die Kraftstoffversorgungsa πlage umschalten kann, wenn nur Nebenaggregate laufen.

15. Steuervorrichtung nach einem der Ansprüche 12 bis 14, dadurch gekennzeichnet, dass sie durch Öffnen eines in der Ventilanordnung angeordneten Rücklaufventils (MV R) veranlasst, dass im Betrieb mit Kraftstoff aus dem zweiten Tank von der Einspritzpumpe nicht verbrauchter Kraftstoff in den entsprechenden Tank zurückgeführt wird.

16. Steuervorrichtung nach einem der Ansprüche 12 bis 15, dadurch gekennzeichnet, dass sie einem Bediener eine Möglichkeit bietet, manuell auf Kraftstoff aus dem ersten Tank umzuschalten bzw. die Umschaltung auf Kraftstoff aus dem zweiten Tank manuell zu verhindern.

17. Steuervorrichtung nach Anspruch 16, gekennzeichnet durch eine Vorrichtung, um den Bediener daran zu erinnern, dass mit Kraftstoff aus dem zweiten Tank gefahren werden könnte, wenn die dafür erforderlichen Bedingungen vorliegen, der Bediener die Umschaltung auf Kraftstoff aus dem zweiten Tank jedoch manuell verhindert hat.

Champion - EX2109, Page 193 of 403
Generac Power Systems, Inc. et al v. Champion Power Equip., Inc.
IPR2025-01438

Figur 1

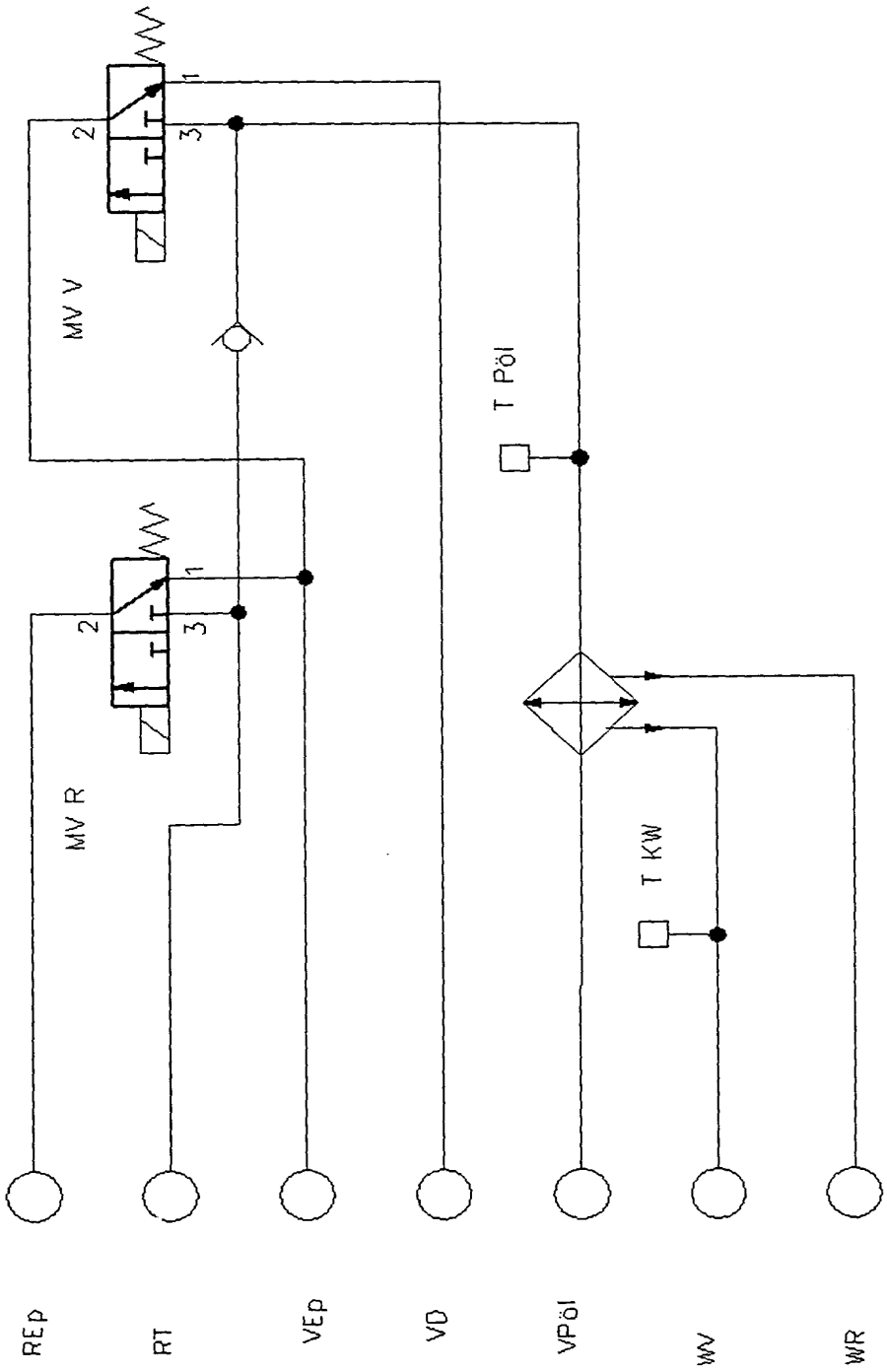

FIGUR 2

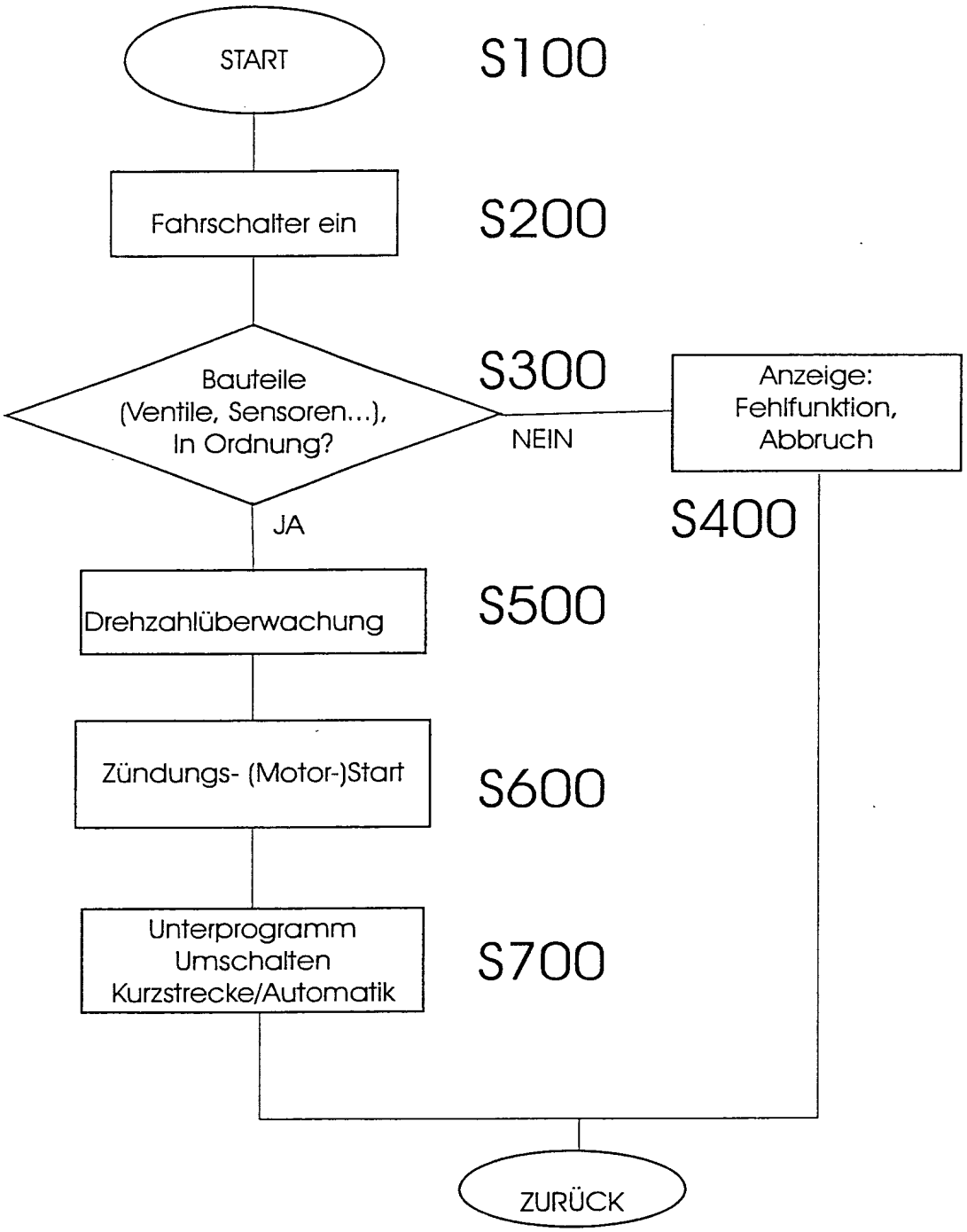
START
S100
Fahrschalter ein
S200
Bauteile (Ventile, Sensoren...), In Ordnung?
S300
NEIN
Anzeige: Fehlfunktion, Abbruch
S400
JA
Drehzahlüberwachung
S500
Zündungs- (Motor-)Start
S600
Unterprogramm Umschalten Kurzstrecke/Automatik
S700
ZURÜCK

FIGUR 3

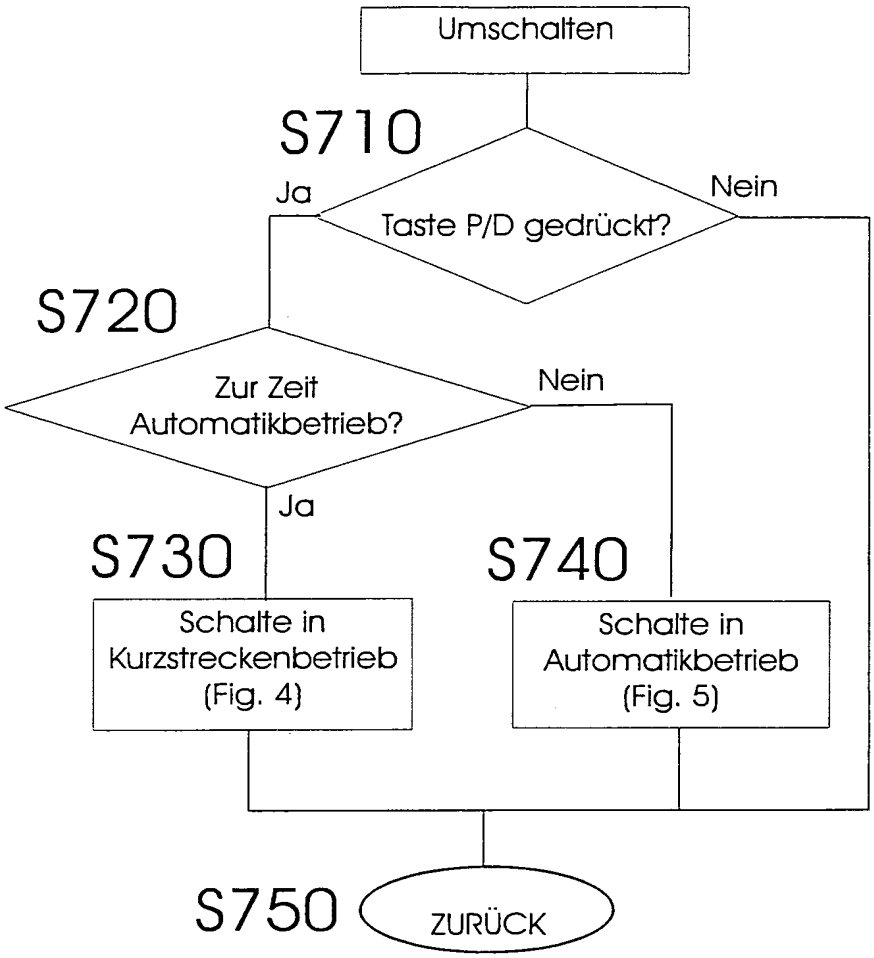
Umschalten
S710
Ja
Nein
Taste P/D gedrückt?
S720
Zur Zeit Automatikbetrieb?
Nein
Ja
S730
S740
Schalte in Kurzstreckenbetrieb (Fig. 4)
Schalte in Automatikbetrieb (Fig. 5)
S750
ZURÜCK

Figur 4

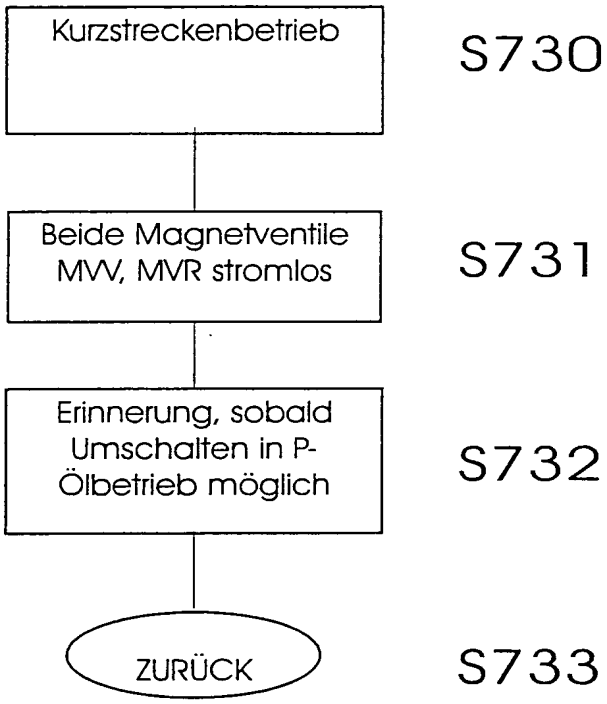

Figur 6

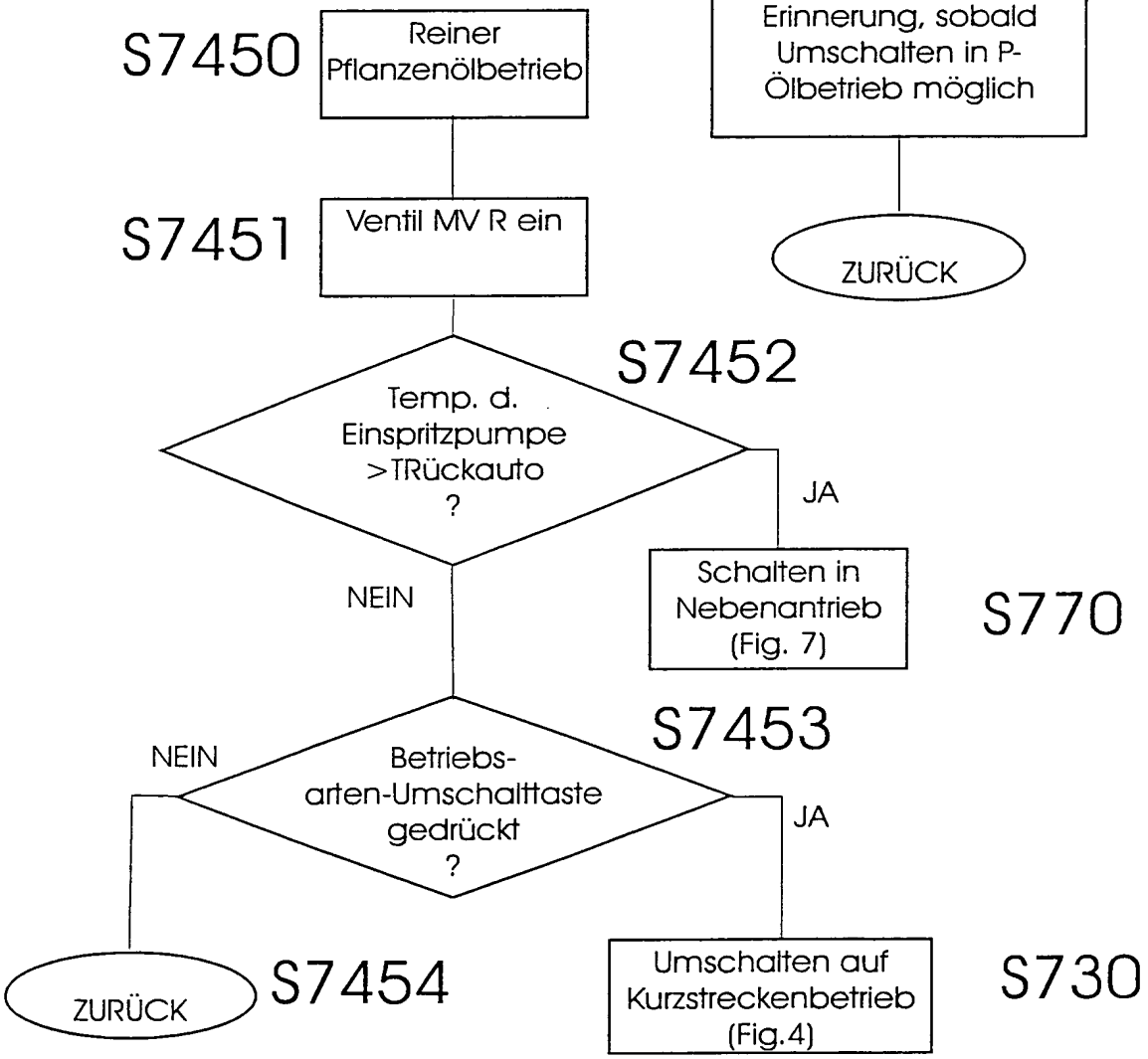

Figur 5

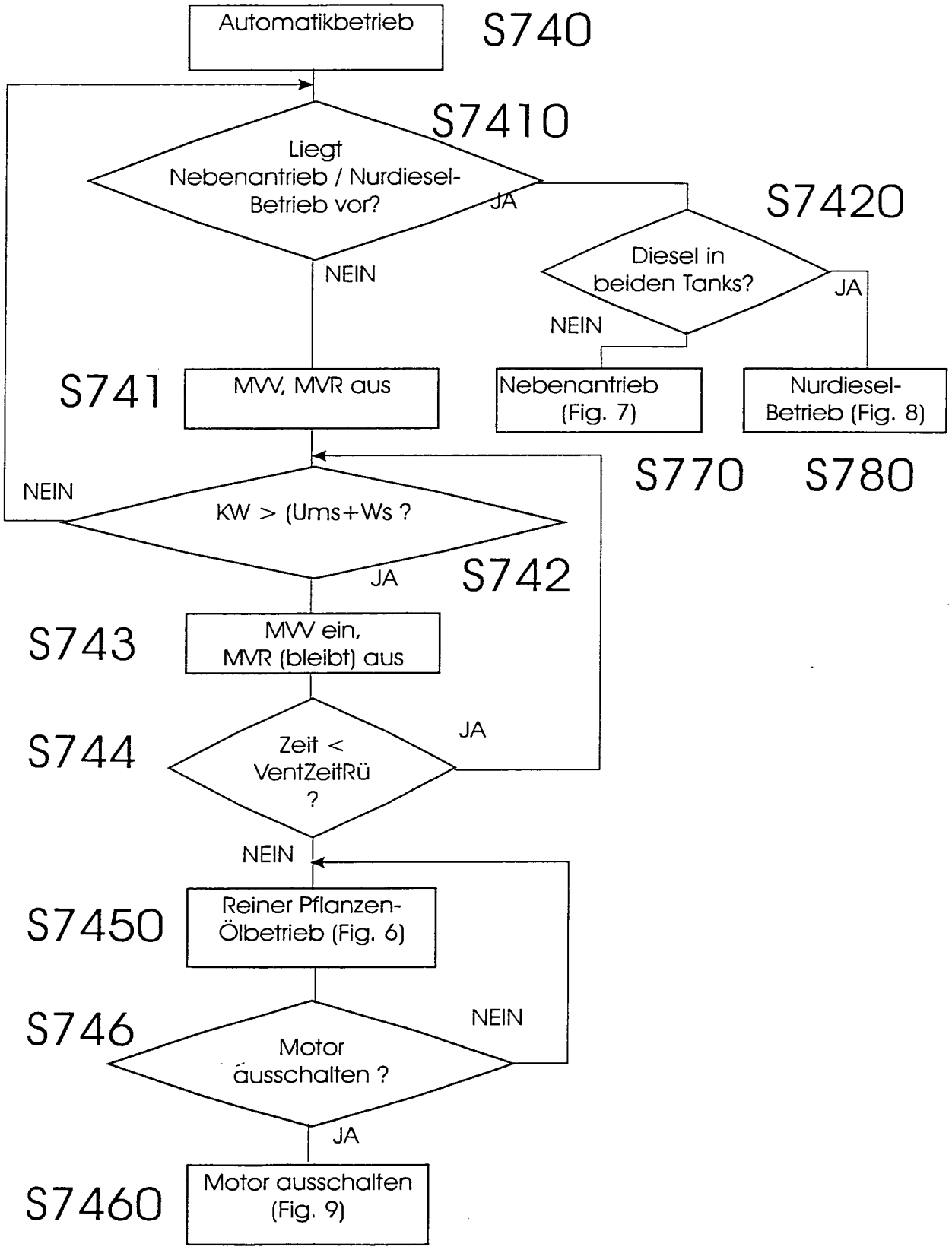
Automatikbetrieb
S740
S7410
Liegt Nebenantrieb / Nurdiesel-Betrieb vor?
JA
NEIN
S7420
Diesel in beiden Tanks?
JA
NEIN
S741
MVV, MVR aus
Nebenantrieb (Fig. 7)
Nurdiesel-Betrieb (Fig. 8)
S770
S780
NEIN
KW > (Ums+Ws ?
JA
S742
S743
MVV ein, MVR (bleibt) aus
S744
Zeit < VentZeitRü ?
JA
NEIN
S7450
Reiner Pflanzen-Ölbetrieb (Fig. 6)
S746
Motor ausschalten ?
NEIN
JA
S7460
Motor ausschalten (Fig. 9)

Figur 7

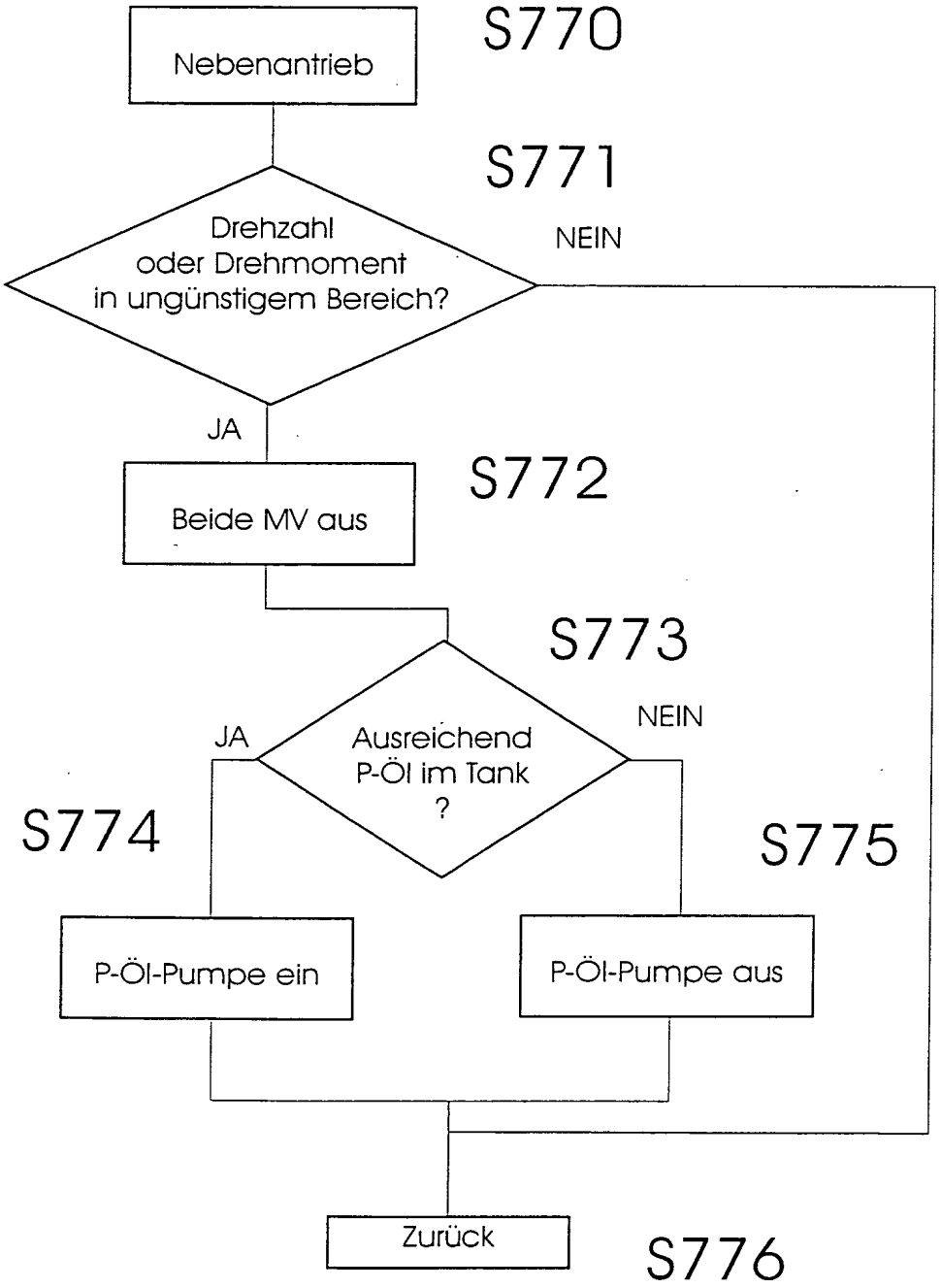
Nebenantrieb
S770
S771
Drehzahl
oder Drehmoment
in ungünstigem Bereich?
NEIN
JA
Beide MV aus
S772
S773
Ausreichend
P-Öl im Tank
?
JA
NEIN
S774
S775
P-Öl-Pumpe ein
P-Öl-Pumpe aus
Zurück
S776

Figur 8

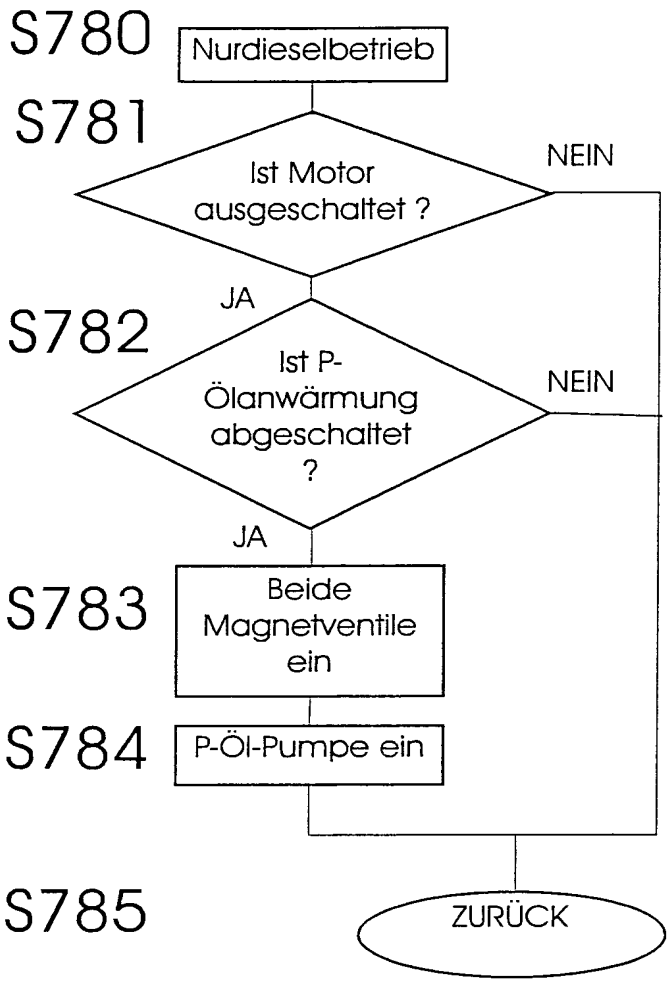
S780
Nurdieselbetrieb
S781
Ist Motor ausgeschaltet ?
NEIN
JA
S782
Ist P-Ölanwärmung abgeschaltet ?
NEIN
JA
S783
Beide Magnetventile ein
S784
P-Öl-Pumpe ein
S785
ZURÜCK

Figur 9

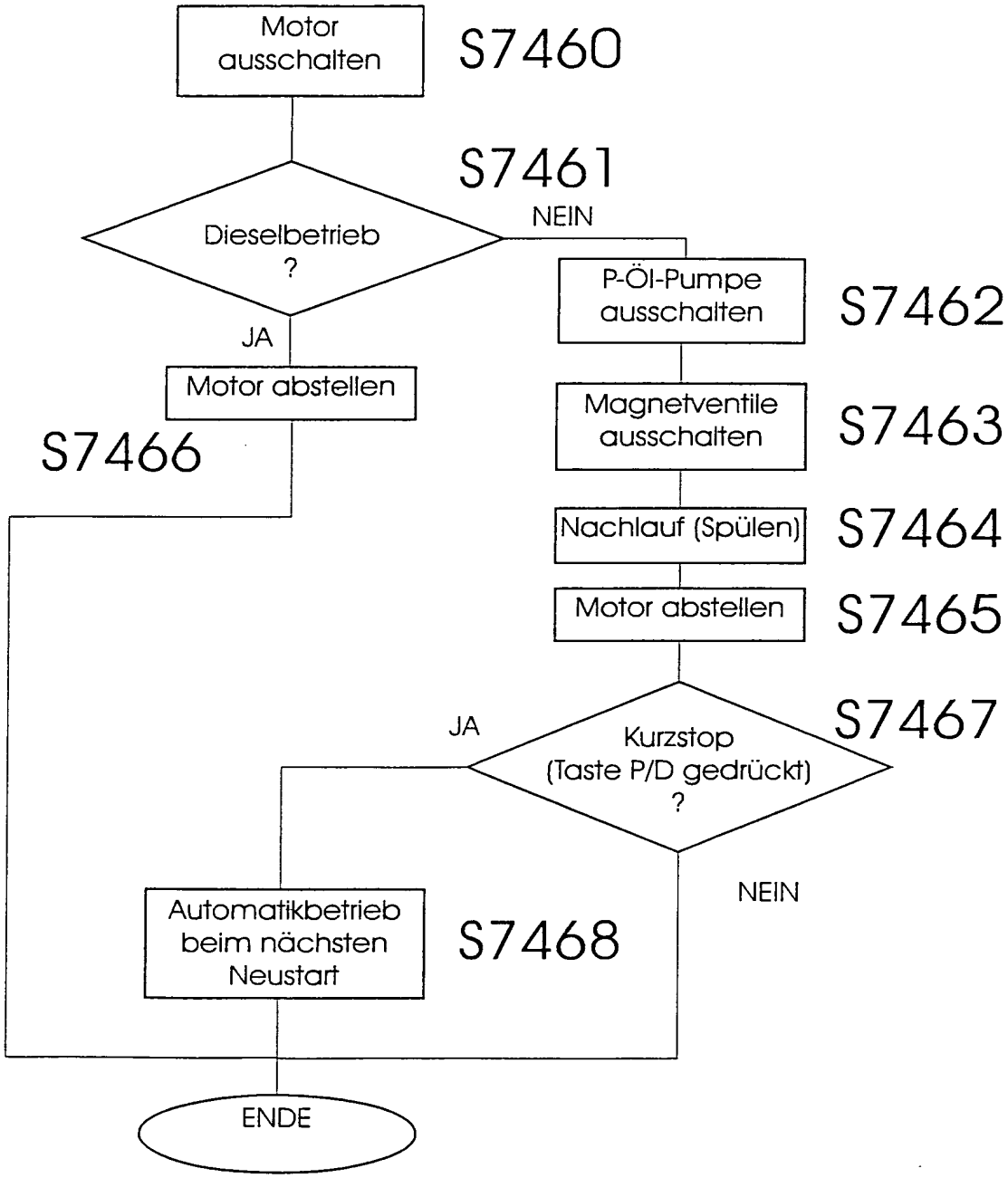
Motor ausschalten
S7460
S7461
Dieselbetrieb ?
NEIN
JA
P-Öl-Pumpe ausschalten
S7462
Motor abstellen
S7466
Magnetventile ausschalten
S7463
Nachlauf (Spülen)
S7464
Motor abstellen
S7465
JA
Kurzstop (Taste P/D gedrückt) ?
S7467
NEIN
Automatikbetrieb beim nächsten Neustart
S7468
ENDE

INTERNATIONAL SEARCH REPORT

International application No
PCT/EP2006/010380

A. CLASSIFICATION OF SUBJECT MATTER

INV. F02D19/06

ADD. F02M37/00 F02M31/16 F02M55/02

According to International Patent Classification (IPC) orto both national Classification and IPC

B. FIELDS SEARCHED

Minimum documentation searched (Classification System followed by Classification Symbols)

F02D F02M

Documontation searched other than minimum documentation to the extent that such documents are included in the fields searched

Electronic data base consulted during the international search (name of data base and, where practical, search terms used)

EPO-Internal , WPI Data

C. DOCUMENTS CONSIDERED TO BE RELEVANT

Category*	Citation of document, with indication, where appropriate, of the relevant passages	Relevant to Claim No.
X	US 2 984 229 A (VAUGHAN PAUL S)	1,2,4-6,
	16 May 1961 (1961-05-16)	10,13,18
Y	figures	8,9,11,
		12
	column 1, line 15 - line 47	
A	column 1, line 66 - column 4, line 29	3,7,
		14-17,
		19-21

Y	DE 100 60 573 A1 (FINGER RALPH)	8,9
	6 September 2001 (2001-09-06)	
	abstract; figures	
	column 2, line 16 - line 47	
	column 2, line 63 - column 3, line 3	
A	column 3, line 37 - column 4, line 25	1-7,
		10-21

	-/-	

[X] Further documents are listed in the continuation of Box C.

[X] See patent family annex.

* Special categories of cited documents :

"A" document defining the general State of the art which is not considered to be of particular relevance

"E" earlier document but published on or after the international filing date

"L" document which maythrow doubts on priority claim(s) or which is cited b establish the publication date of another citation or other special reason (as specified)

"O" document referring to an oral disclosur β, use, exhibition or other means

"P" document published priorto the international filing date but laterthan the priority date claimed

[1]T" later document published after the international filing date or priority date and not in conflict with the application but cited to understand the principle or theory underlying the invention

"X" document of particular relevance; the claimed invention cannot be considered novel or cannot be considered to involve an inventive step when the document is taken alone

"Y" document of particular relevance; the claimed invention cannot be considered to involve an inventive step when the document is combined with one or more other such docu¬ ments, such combination being obvious to a person skilled in the art.

"&" document member of the same patent family

Date of the actual completion of the international search	Date of mailing of the international search report
7 February 2007	14/02/2007
Name and mailing address of the ISA/ European Patent Office, P.B. 5818 Patentlaan 2 NL-2280 HV Rijswi)k Tel. (+31-70) 340-2040, Tx. 31 651 epo nl, Fax: (+31-70) 340-3016	Authorized officer Döring, Marcus

Form PGT/ISA/210 (seoond sheet) (April 2005)

INTERNATIONAL SEARCH REPORT

International application No
PCT/EP2006/010380

C(Continuation). DOCUMENTS CONSIDERED TO BE RELEVANT

Category *	Citation of document, with indication, where appropriate, of the relevant passages	Relevant to Claim No.
Y	DE 12 03 046 B (WILLY SOSSIAUX) 14 October 1965 (1965-10-14) figures column 1, line 1 - line 51 column 3, line 20 - line 35	11,12
A	column 4, line 43 - line 63	1-10, 13-21

X	DE 196 35 220 Al (LOHMANN GEORG) 14 May 1998 (1998-05-14) abstract ; figures	1,4-6, 10, 13
A	column 1, line 3 - column 3, line 64	2,3,7-9 , 11,12, 14-21

X	DE 39 29 115 Al (ELSBETT LUDWIG ET AL.) 7 March 1991 (1991-03-07) abstract ; figure column 1, line 3 - column 2, line 7	1,4-7, 10, 13-15
A	column 2, line 55 - column 3, line 8	2,3,8,9 , 11,12, 16-21

X	EP 1 462 636 A2 (AFHYMAT) 29 September 2004 (2004-09-29)	1,4-6, 10, 13, 16, 17
Y	abstract ; figures	2,3
A	column 3, line 12 - column 6, line 44	7-9, 11, 12, 14, 15, 18-21

Y	DE 44 33 500 Al (LOHMANN GEORG) 28 March 1996 (1996-03-28) abstract ; figure	2,3
A	column 1, line 19 - line 32	1,4-21

P,X	EP 1 647 699 A (KANGLER WOLFRAM) 19 April 2006 (2006-04-19) abstract ; figures column 1, paragraph 1 - column 2, Paragraph 7 column 3, paragraph 14 - column 5, paragraph 24 column 6, paragraph 29 - column 10, paragraph 51	1,2,4, 10

A	DE 44 18 856 Al (ROBUR WERKE GMBH I. L.) 7 December 1995 (1995-12-07) abstract ; figures column 2, line 13 - line 54	1-21

	-/--	

INTERNATIONAL SEARCH REPORT

International application No
PCT/EP2006/010380

C(Continuation). DOCUMENTS CONSIDERED TO BE RELEVANT

Category *	Citation of document, with indication, where appropriate, of the relevant passages	Relevant to Claim No.
A	DE 101 54 455 A1 (GENTSCH DIETMAR) 15 May 2003 (2003-05-15) cited in the application abstract ; figures column 1, paragraph 4 - column 3, Paragraph 14 -----	1-21
A	DE 38 00 585 Al (KLÖCKNER-HUMBOLDT-DEUTZ AG) 28 July 1988 (1988-07-28) cited in the application abstract; figures column 2, line 2 - line 23 column 2, line 66 - column 4, line 53 -----	1-21

INTERNATIONAL SEARCH REPORT

Information on patent family members

International application No
PCT/EP2006/010380

Patent document cited in search report		Publication date	Patent family member(s)		Publication date
US 2984229	A	16-05-1961	NONE		
DE 10060573	A1	06-09-2001	NONE		
DE 1203046	B	14-10-1965	NONE		
DE 19635220	A1	14-05-1998	NONE		
DE 3929115	A1	07-03-1991	NONE		
EP 1462636	A2	29-09-2004	FR	2853013 A1	01-10-2004
DE 4433500	A1	28-03-1996	NONE		
EP 1647699	A	19-04-2006	DE 102004050601 A1 US 2006081223 A1		27-04-2006 20-04-2006
DE 4418856	A1	07-12-1995	NONE		
DE 10154455	A1	15-05-2003	NONE		
DE 3800585	A1	28-07-1988	NONE		

INTERNATIONALER RECHERCHENBERICHT

Internationales Aktenzeichen
PCT/EP2006/010380

A. KLASSIFIZIERUNG DES ANMELDUNGSGEGENSTANDES

INV. F02D19/06
ADD. F02M37/00 F02M31/16 F02M55/02

Nach der Internationalen Patentklassifikation (IPC) oder nach der nationalen Klassifikation und der IPC

B. RECHERCHIERTE GEBIETE

Recherchierter Mindestprüfstoff (Klassifikationssystem und Klassifikationssymbole)
F02D F02M

Recherchierte, aber nicht zum Mindestprüf Stoff gehörende Veröffentlichungen, soweit diese unter die recherchierten Gebiete fallen

Während der internationalen Recherche konsultierte elektronische Datenbank (Name der Datenbank und evtl. verwendete Suchbegriffe)

EPO-Internal , WPI Data

C. ALS WESENTLICH ANGESEHENE UNTERLAGEN

Kategorie*	Bezeichnung der Veröffentlichung, soweit erforderlich unter Angabe der in Betracht kommenden Teile	Betr. Anspruch Nr.
X	US 2 984 229 A (VAUGHAN PAUL S)	1,2,4-6,
	16. Mai 1961 (1961-05-16)	10,13,18
Y	Abbildungen	8,9,11,
		12
	Spalte 1, Zeile 15 - Zeile 47	
A	Spalte 1, Zeile 66 - Spalte 4, Zeile 29	3,7,
		14-17,
		19-21

Y	DE 100 60 573 A1 (FINGER RALPH)	8,9
	6. September 2001 (2001-09-06)	
	Zusammenfassung; Abbildungen	
	Spalte 2, Zeile 16 - Zeile 47	
	Spalte 2, Zeile 63 - Spalte 3, Zeile 3	
A	Spalte 3, Zeile 37 - Spalte 4, Zeile 25	1-7,
		10-21

	-/--	

[X] Weitere Veröffentlichungen sind der Fortsetzung von Feld C zu entnehmen [X] Siehe Anhang Patentfamilie

* Besondere Kategorien von angegebenen Veröffentlichungen :
"A' Veröffentlichung, die den allgemeinen Stand der Technik definiert, aber nicht als besonders bedeutsam anzusehen ist
[1]E" älteres Dokument, das jedoch erst am oder nach dem internationalen Anmeldedatum veröffentlicht worden ist
"L[1] Veröffentlichung, die geeignet ist, einen Prioritätsanspruch zweifelhaft erscheinen zu lassen, oder durch die das Veröffentlichungsdatum einer anderen im Recherchenbericht genannten Veröffentlichung belegt werden soll oder die aus einem anderen besonderen Grund angegeben ist (wie ausgeführt)
"O" Veröffentlichung, die sich auf eine mündliche Offenbarung, eine Benutzung, eine Ausstellung oder andere Maßnahmen bezieht
"P" Veröffentlichung, die vor dem internationalen Anmeldedatum, aber nach dem beanspruchten Prioritätsdatum veröffentlicht worden ist

"T" Spätere Veröffentlichung, die nach dem internationalen Anmeldedatum oder dem Prioritätsdatum veröffentlicht worden ist und mit der Anmeldung nicht kollidiert, sondern nur zum Verständnis des der Erfindung zugrundeliegenden Prinzips oder der ihr zugrundeliegenden Theorie angegeben ist
"X" Veröffentlichung von besonderer Bedeutung; die beanspruchte Erfindung kann allein aufgrund dieser Veröffentlichung nicht als neu oder auf erfinderisch er Tätigkeit beruhend betrachtet werden
"Y" Veröffentlichung von besonderer Bedeutung; die beanspruchte Erfindung kann nicht als auf erfinderischer Tätigkeit beruhend betrachtet werden, wenn die Veröffentlichung mit einer oder mehreren anderen Veröffentlichungen dieser Kategorie in Verbindung gebracht wird und diese Verbindung für einen Fachmann naheliegend ist
'&' Veröffentlichung, die Mitglied derselben Patentfamilie ist

Datum des Abschlusses der internationalen Recherche	Absendedatum des internationalen Recherchenberichts
7. Februar 2007	14/02/2007

Name und Postanschrift der Internationalen Recherchenbehörde	Bevollmächtigter Bediensteter
Europäisches Patentamt, P.B. 5818 Patentlaan 2 NL - 2280 HV RijSWiJk Tel. (+31-70) 340-2040, Tx. 31 651 epo nl, Fax: (+31-70) 340-3016	Döring, Marcus

Formblatt PCT/ISA/210 (Blatt 2) (April 2005)

INTERNATIONALER RECHERCHENBERICHT

Internationales Aktenzeichen
PCT/EP2006/010380

C. (Fortsetzung) ALS WESENTLICH ANGESEHENE UNTERLAGEN

Kategorie*	Bezeichnung der Veröffentlichung, soweit erforderlich unter Angabe der in Betracht kommenden Teile	Betr. Anspruch Nr.
Y	DE 12 03 046 B (WILLY GOSSIAUX) 14. Oktober 1965 (1965-10-14) Abbildungen Spalte 1, Zeile 1 - Zeile 51 Spalte 3, Zeile 20 - Zeile 35	11,12
A	Spalte 4, Zeile 43 - Zeile 63	1-10, 13-21

X	DE 196 35 220 A1 (LOHMANN GEORG) 14. Mai 1998 (1998-05-14) Zusammenfassung; Abbildungen	1,4-6, 10, 13
A	Spalte 1, Zeile 3 - Spalte 3, Zeile 64	2,3,7-9, 11,12, 14-21

X	DE 39 29 115 A1 (ELSBETT LUDWIG ET AL.) 7. März 1991 (1991-03-07) Zusammenfassung; Abbildung Spalte 1, Zeile 3 - Spalte 2, Zeile 7	1,4-7, 10, 13-15
A	Spalte 2, Zeile 55 - Spalte 3, Zeile 8	2,3,8,9, 11,12, 16-21

X	EP 1 462 636 A2 (AFHYMAT) 29. September 2004 (2004-09-29)	1,4-6, 10, 13, 16, 17
Y	Zusammenfassung; Abbildungen	2,3
A	Spalte 3, Zeile 12 - Spalte 6, Zeile 44	7-9, 11, 12, 14, 15, 18-21

Y	DE 44 33 500 A1 (LOHMANN GEORG) 28. März 1996 (1996-03-28) Zusammenfassung; Abbildung	2,3
A	Spalte 1, Zeile 19 - Zeile 32	1,4-21

P,X	EP 1 647 699 A (KANGLER WOLFRAM) 19. April 2006 (2006-04-19) Zusammenfassung; Abbildungen Spalte 1, Absatz 1 - Spalte 2, Absatz 7 Spalte 3, Absatz 14 - Spalte 5, Absatz 24 Spalte 6, Absatz 29 - Spalte 10, Absatz 51	1,2,4, 10

A	DE 44 18 856 A1 (ROBUR WERKE GMBH I. L.) 7. Dezember 1995 (1995-12-07) Zusammenfassung; Abbildungen Spalte 2, Zeile 13 - Zeile 54	1-21

A	DE 101 54 455 A1 (GENTSCH DIETMAR) 15. Mai 2003 (2003-05-15) in der Anmeldung erwähnt Zusammenfassung; Abbildungen Spalte 1, Absatz 4 - Spalte 3, Absatz 14	1-21

	-/-	

INTERNATIONALER RECHERCHENBERICHT

Internationales Aktenzeichen
PCT/EP2006/010380

C. (Fortsetzung) ALS WESENTLICH ANGESEHENE UNTERLAGEN

Kategorie*	Bezeichnung der Veröffentlichung, soweit erforderlich unter Angabe der in Betracht kommenden Teile	Betr. Anspruch Nr.
A	DE 38 00 585 A1 (KLÖCKNER-HUMBOLDT-DEUTZ AG) 28. Juli 1988 (1988-07-28) in der Anmeldung erwähnt Zusammenfassung; Abbildungen Spalte 2, Zeile 2 - Zeile 23 Spalte 2, Zeile 66 - Spalte 4, Zeile 53 -----	1-21

INTERNATIONALER RECHERCHENBERICHT

Angaben zu Veröffentlichungen, die zur selben Patentfamilie gehören

Internationales Aktenzeichen
PCT/EP2006/010380

Im Recherchenbericht angeführtes Patentdokument		Datum der Veröffentlichung	Mitglied(er) der Patentfamilie		Datum der Veröffentlichung
US 2984229	A	16-05-1961	KEINE		
DE 10060573	A1	06-09-2001	KEINE		
DE 1203046	B	14-10-1965	KEINE		
DE 19635220	A1	14-05-1998	KEINE		
DE 3929115	A1	07-03-1991	KEINE		
EP 1462636	A2	29-09-2004	FR	2853013 A1	01-10-2004
DE 4433500	A1	28-03-1996	KEINE		
EP 1647699	A	19-04-2006	DE 102004050601 A1 US 2006081223 A1		27-04-2006 20-04-2006
DE 4418856	A1	07-12-1995	KEINE		
DE 10154455	A1	15-05-2003	KEINE		
DE 3800585	A1	28-07-1988	KEINE		

Espacenet

Bibliographic data: JPH0466743 (A) — 1992-03-03

TWO-SORT FUEL ENGINE

Inventor(s): MAEDA TADAMASA ± (MAEDA TADAMASA)

Applicant(s): SUZUKI MOTOR CO ± (SUZUKI MOTOR CORP)

Classification: **- international:** ***F02D19/06; F02D41/14;*** (IPC1-7): F02D19/06; F02D41/14

- cooperative:

Application number: JP19900180942 19900709

Priority number(s): JP19900180942 19900709

Abstract of JPH0466743 (A)

PURPOSE:To realize a control suitable for the properties of fuels in a simple system by using a whole scope air-fuel ratio sensor, and feedback-controlling the air-fuel ratio, the ignition timing, and the like, of the other side fuel while making one side fuel as a standard, in an engine to select and use the fuel from two sorts of different fuels. CONSTITUTION:The first fuel tank 1 and the second fuel tank 2 to store the first fuel (LPG) and the second fuel (LNG) separately are provided, and at the outlets of the fuel tanks 1 and 2, the first and the second electromagnetic valves 4 and 5 converted by a manual changeover switch 3 (S1) are provided respectively. A fuel passage 6 downstream of the electromagnetic valves 4 and 5 is linked to a two-way electromagnetic valve 8 interlocked with the change-over switch 3 through a vaporizer 7, and regulators 9 and 10 to regulate the pressure of the fuels are connected to the two parts of the two-way solenoid valve 8. These regulators 9 and 10 are connected to an injector 16 through a fuel passage 13. And the output signal of a whole scope air-fuel ratio sensor S2 provided at an exhaust passage 20 are input to the ECU 24, and the control is carried out to correct the other side fuel making one side fuel as a standard.

⑲日本国特許庁（JP）　⑪特許出願公開

⑫公開特許公報（A）　平4－66743

⑤Int. Cl.⁵　識別記号　庁内整理番号　㊸公開　平成4年(1992)3月3日

F 02 D 41/14　310 D　9039－3G
19/06　B　6502－3G

審査請求　未請求　請求項の数 1　（全4頁）

⑭発明の名称　2種燃料エンジン

㉑特　願　平2－180942
㉒出　願　平2(1990)7月9日

⑫発明者　前田　忠政　静岡県浜松市白羽町231－1
⑪出願人　スズキ株式会社　静岡県浜松市高塚町300番地
⑭代理人　弁理士　佐藤　一雄　外3名

明　細　書

1．発明の名称

2種燃料エンジン

2．特許請求の範囲

2種の燃料タンクと、燃料の選択により各燃料タンクから選択的に燃料を供給する切換弁と、選択された燃料を調圧してエンジンの燃焼室へ燃料を供給する燃料通路と、エンジンの排気系に設けられた全領域空燃比センサと、一方の燃料を基準として他方の燃料の最適値にセッティングしたROMとを有し、前記センサの出力信号により使用燃料による空燃比を制御するようにしたことを特徴とする2種燃料エンジン。

3．発明の詳細な説明

（産業上の利用分野）

本発明は、2種の燃料を切換えて使用する2種燃料エンジンに関する。

（従来の技術）

例えば、LPG（液化石油ガス）とLNG（液化天然ガス）、LPGとH_2、H_2とLNG（またはCNG）のように2種の異なる燃料を切換えて使用するエンジンがある。

このように2種類の燃料を使用する場合、一般に両燃料ともエンジンの負圧により吸入するキャブレタ方式を採用するか、あるいは一方の燃料はインジェクションを用いて制御し、他方の燃料はキャブレタ方式を用いて制御することが多い。

また、両燃料を電子制御する場合は、既存のO_2センサを用いて制御するようにしている。このO_2センサは、試験管状のジルコニア素子の内外面に薄い白金をメッキして電極とし、素子の内外の酸素濃度差に応じて起動力が発生するようにしたのものである。

（発明が解決しようとする課題）

しかるに上記の従来技術では、一方の燃料について最適に電子制御しても、他方の燃料はあくまで緊急用としてしかとらえられていないためこれ

Champion - EX2109, Page 211 of 403
Generac Power Systems, Inc. et al v. Champion Power Equip., Inc.
IPR2025-01438

を最適空燃比に制御することはなされていず、またO_2センサを用いたものは、双方の燃料によってエンジンの回転数、負荷に応じた理論空燃比以外の空燃比にフィードバック制御することができなかった。

本発明はこれに鑑み、同一の全領域空燃比センサを用い、エンジンの負荷に応じた空燃比のフィードバック制御および点火時期制御を、各々セッティングされたマップおよび補正係数を使い分けて最適な空燃比制御を可能とする2種燃料エンジンを提供することを目的としてなされたものである。

(課題を解決するための手段)

上記従来技術が有する問題点を解決するため、本発明は、2種の燃料タンクと、燃料の選択により各燃料タンクから選択的に燃料を供給する切換弁と、選択された燃料を調圧してエンジンの燃焼室へ燃料を供給する燃料通路と、エンジンの排気系に設けられた全領域空燃比センサと、一方の燃料を基準として他方の燃料の最適値にセッティングしたROMとを有し、前記センサの出力信号により使用燃料による空燃比を制御するようにしたことを特徴とするものである。

(作　用)

手動切換スイッチを切換えて燃料を選択すると、選択された燃料が調圧されて燃料通路を通じエンジンの燃焼室に送られる。このとき全領域での排気中のO_2量の検出結果に基づき他方の燃料の空燃比に補正がかけられてその燃料の最適空燃比が決定される。したがって全領域の空燃比を測定するので、負荷により適切な空燃比が違ってもそれぞれの燃料に対し適切なマップ制御ができる。

(実施例)

以下、本発明を図面に示す実施例を参照して説明する。

図示の実施例はインジェクション方式のエンジンに適用した場合を示し、燃料としてLPGとLNGの2種の燃料を選択使用する場合を示している。すなわち第1燃料(LPG)と第2燃料(LNG)を別個に収納する第1燃料タンク1と第2燃料タンク2を有し、これら第1，第2燃料タンク1，2の出口部には、運転席の手動切換スイッチ3(S_1)により切換え作動され緊急遮断弁を兼ねる切換弁としての第1電磁弁4および第2電磁弁5がそれぞれ設けられている。

これら電磁弁4，5より後流側の燃料通路6はベーパーライザ7を経て前記切換スイッチ3に連動する2方電磁弁8に至り、この2方電磁弁8の一方のポートには第1燃料を整圧するレギュレータ9が接続され、他方のポートには第2燃料を整圧するレギュレータ10が接続されており、これらレギュレータ9，10はそれぞれ逆止弁11，12を介して燃料通路13に接続され、この燃料通路13はエンジン14の燃焼室15に燃料を噴射するインジェクタ16に接続されている。前記各レギュレータ9，10はダイヤフラム式のものが用いられ、その加圧室9a，10aにはエンジン14の吸気通路17の吸気圧が導入通路18，19を通じて導入されるようになっている。

エンジン14の排気通路20には、エンジン14の回転の全領域においてO_2量を検出することのできる全領域空燃比センサS_2が設けられている。このセンサS_2は、例えば理論空燃比検出センサとジルコニア素子イオン伝導性を利用した酸素ポンプとの組合せからなっている。

第1図においてS_3は燃料通路13に設けられた燃料温度センサ、S_4は燃料圧センサであり、またS_5は吸気通路17に設けられた吸気圧センサ、S_6は同じく吸気通路17に設けられた吸気温センサ、S_7は水温センサ、S_8はスロットルセンサである。また第2図において21はディストリビュータであり、S_9はその気筒判別センサ、S_{10}はクランク角センサを示し、さらに22はバッテリ、23はイグニッションスイッチを示している。

ECU24は、全領域空燃比センサS_2により燃料の違いによる実際の空燃比から他方の燃料の空燃比センサ出力信号に補正をかけるためのROMを有している。この補正は、一方の燃料を基準とし、他方の燃料を補正するようにしている。

Champion - EX2109, Page 212 of 403
Generac Power Systems, Inc. et al v. Champion Power Equip., Inc.
IPR2025-01438

いま、運転席の手動切換スイッチ3（S_1）を切換えて第1または第2燃料のいずれかを選択すると、選択された燃料の燃料タンク1または2の電磁弁4または5が開き、その燃料は燃料通路6、ベーパーライザ7を通ってその燃料用のレギュレータ9または10を通り、こゝで整圧されて燃料通路13へ流れ、インジェクタ16からエンジン14の燃焼室15へ噴射される。このときの基本噴射量は、吸気圧センサS_5、気筒判別センサS_9により定められ、燃料温度センサS_3、スロットルセンサS_8、水温センサS_7、吸気温センサS_6、燃料圧センサS_7等により補正され、噴射量が決定される。またこれと併せてディストリビュータ21の点火時期の決定がなされる。これらの補正は、全領域空燃比センサS_2の検出信号に基づきＥＣＵ24により行なわれる。

そのフローは、第3図に示すように、全領域空燃比センサS_2の出力を読込み、燃料が第1燃料か否かが判断され、第1燃料であれば、その空燃比を算出し、第2燃料である場合には補正がかけられる。ついで吸気圧センサS_4、気筒判別センサS_9のデータを読込み、ブースト圧、エンジン回転数に応じ第1燃料、第2燃料それぞれの目標空燃比の選定、点火進角マップ、各種補正が行なわれ、インジェクタ操作量が決定される。

〔発明の効果〕

以上説明したように本発明によれば、2種の異なる燃料を選択して用いるエンジンにおいて、全領域空燃比センサを用い、一方の燃料を基準として他方の燃料の空燃比、点火時期等をフィードバック制御するようにしたので、各センサ、アクチュエータ等は同一で各燃料にセッティングしたマップ、補正係数を燃料切換スイッチの信号によって切換使用することが可能となり、簡単なシステムによりそれぞれの燃料の特性に合った空燃比、点火時期を決定することができる。

4．図面の簡単な説明

第1図は本発明を適用した2種燃料エンジンのシステム図、第2図は同ＥＣＵの入出力信号を示す説明図、第3図は同フローチャートである。

1…第1燃料タンク、2…第2燃料タンク、3（S_1）…燃料切換スイッチ、4，5…電磁弁、6，13…燃料通路、7…ベーパーライザ、8…2方切換弁、9，10…レギュレータ，14…エンジン、15…燃焼室、16…インジェクタ、17…吸気通路、20…排気通路、21…ディストリビュータ、S_2全領域空燃比センサ、S_3…燃料温度センサ、S_4…燃料圧センサ、S_5…吸気圧センサ、S_6…吸気温センサ、S_7…水温センサ、S_8…スロットルセンサ、S_9…気筒判別センサ、S_{10}…クランク角センサ。

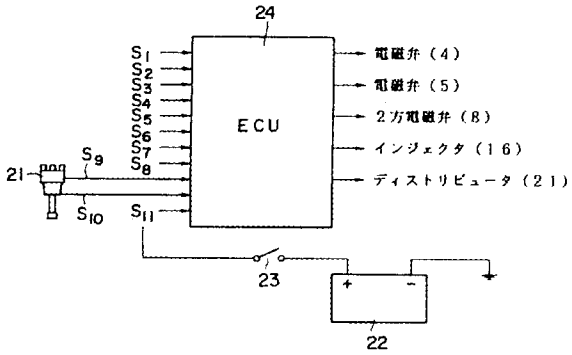

第2図

出願人代理人　佐　藤　一　雄

Champion - EX2109, Page 213 of 403
Generac Power Systems, Inc. et al v. Champion Power Equip., Inc.
IPR2025-01438

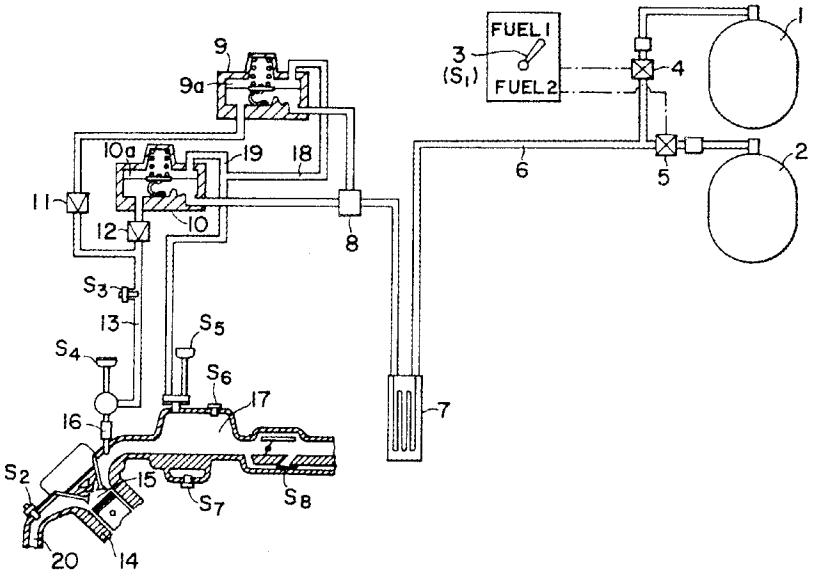

第1図

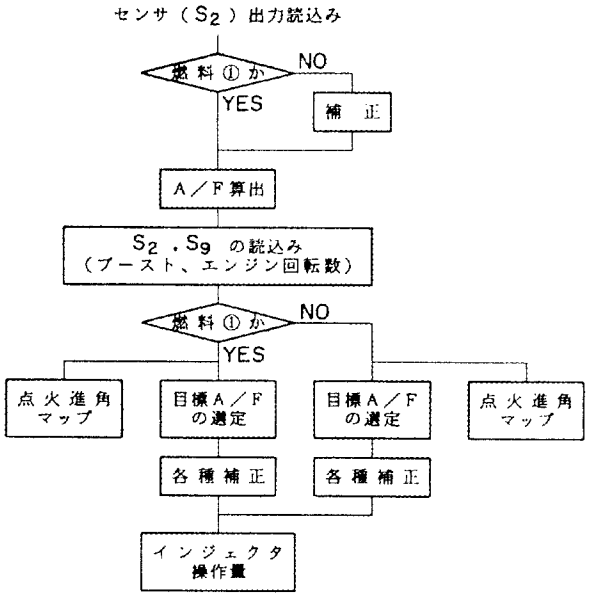

第3図

Champion - EX2109, Page 214 of 403
Generac Power Systems, Inc. et al v. Champion Power Equip., Inc.
IPR2025-01438

PCT

WORLD INTELLECTUAL PROPERTY ORGANIZATION
International Bureau

INTERNATIONAL APPLICATION PUBLISHED UNDER THE PATENT COOPERATION TREATY (PCT)

(51) International Patent Classification 6 : F02M 43/00, F02D 19/08

A1

(11) International Publication Number: WO 99/01659

(43) International Publication Date: 14 January 1999 (14.01.99)

(21) International Application Number: PCT/AU98/00500

(22) International Filing Date: 30 June 1998 (30.06.98)

(30) Priority Data:
PO 7634 30 June 1997 (30.06.97) AU

(71)(72) Applicant and Inventor: BAILEY, Gregory, Rex [AU/AU]; 3 Valley View Close, Milton, NSW 2538 (AU).

(74) Agent: HODGKINSON, Hugh, Rudyard; H.R. Hodgkinson & Co., Level 3, 20 Alfred Street, Milsons Point, NSW 2061 (AU).

(81) Designated States: AL, AM, AT, AU, AZ, BA, BB, BG, BR, BY, CA, CH, CN, CU, CZ, DE, DK, EE, ES, FI, GB, GE, GH, GM, GW, HU, ID, IL, IS, JP, KE, KG, KP, KR, KZ, LC, LK, LR, LS, LT, LU, LV, MD, MG, MK, MN, MW, MX, NO, NZ, PL, PT, RO, RU, SD, SE, SG, SI, SK, SL, TJ, TM, TR, TT, UA, UG, US, UZ, VN, YU, ZW, ARIPO patent (GH, GM, KE, LS, MW, SD, SZ, UG, ZW), Eurasian patent (AM, AZ, BY, KG, KZ, MD, RU, TJ, TM), European patent (AT, BE, CH, CY, DE, DK, ES, FI, FR, GB, GR, IE, IT, LU, MC, NL, PT, SE), OAPI patent (BF, BJ, CF, CG, CI, CM, GA, GN, ML, MR, NE, SN, TD, TG).

Published
With international search report.

(54) Title: A DUAL–FUEL METHOD FOR BOOST FUEL SUBSTITUTION IN TURBO–CHARGED DIESEL ENGINES

(57) Abstract

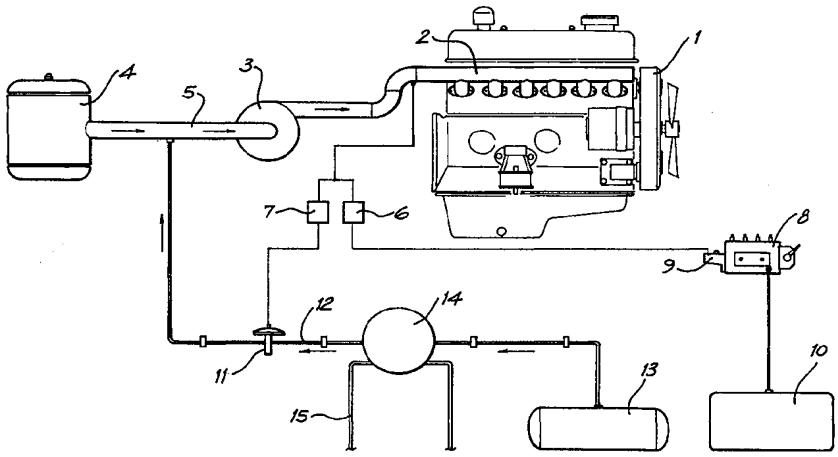

An assembly for boost fuel substitution in turbo charged diesel engines; the assembly including: a diesel engine including an inlet manifold (2) and an exhaust manifold; a turbocharger (3) in communication with said inlet manifold (2); first and second reservoirs of diesel (10) and gas (13) respectively selectively in communication with said engine; a fuel injection pump (8) including an aneroid (9) intermediate the first reservoir of diesel (10) and said inlet manifold (2); a control valve (11) intermediate the second reservoir of gas (13) and said inlet manifold (2); characterised in that the assembly includes at least two solenoids (6, 7) each capable of moving between first and second operational states; wherein a first of said solenoids (6) is located between the inlet manifold (2) and said fuel injection pump (8) and the second solenoid (7) is located between said inlet manifold (2) and said control valve (11) wherein, said first solenoid (6) responsive to a predetermined engine operating parameter moves between a first state in which pressurised air from said inlet manifold (2) communicates with said aneroid (9) and atmospheric air is isolated from the aneroid (9) and a second state in which manifold air to the fuel injection pump (8) is interrupted and atmospheric air is in communication with the aneroid (9) and pressurised air from said inlet manifold (2) terminates at said first solenoid (6); and wherein the second solenoid (7) responsive to said predetermined engine operating parameter and/or signal is located between said inlet manifold (2) and said control valve (11) and moves between a first state in which atmospheric air is in communication with said control valve (11) and second state in which pressurised air from said inlet manifold (2) is in communication with said control valve (11); wherein when the first solenoid (6) isolates said first fuel type, the second solenoid (7) operates responsive to a signal to allow boost fuel provided by said second fuel type to communicate between the second fuel source (13) and the engine.

FOR THE PURPOSES OF INFORMATION ONLY

Codes used to identify States party to the PCT on the front pages of pamphlets publishing international applications under the PCT.

AL	Albania	**ES**	Spain	**LS**	Lesotho	**SI**	Slovenia
AM	Armenia	**FI**	Finland	**LT**	Lithuania	**SK**	Slovakia
AT	Austria	**FR**	France	**LU**	Luxembourg	**SN**	Senegal
AU	Australia	**GA**	Gabon	**LV**	Latvia	**SZ**	Swaziland
AZ	Azerbaijan	**GB**	United Kingdom	**MC**	Monaco	**TD**	Chad
BA	Bosnia and Herzegovina	**GE**	Georgia	**MD**	Republic of Moldova	**TG**	Togo
BB	Barbados	**GH**	Ghana	**MG**	Madagascar	**TJ**	Tajikistan
BE	Belgium	**GN**	Guinea	**MK**	The former Yugoslav Republic of Macedonia	**TM**	Turkmenistan
BF	Burkina Faso	**GR**	Greece			**TR**	Turkey
BG	Bulgaria	**HU**	Hungary	**ML**	Mali	**TT**	Trinidad and Tobago
BJ	Benin	**IE**	Ireland	**MN**	Mongolia	**UA**	Ukraine
BR	Brazil	**IL**	Israel	**MR**	Mauritania	**UG**	Uganda
BY	Belarus	**IS**	Iceland	**MW**	Malawi	**US**	United States of America
CA	Canada	**IT**	Italy	**MX**	Mexico	**UZ**	Uzbekistan
CF	Central African Republic	**JP**	Japan	**NE**	Niger	**VN**	Viet Nam
CG	Congo	**KE**	Kenya	**NL**	Netherlands	**YU**	Yugoslavia
CH	Switzerland	**KG**	Kyrgyzstan	**NO**	Norway	**ZW**	Zimbabwe
CI	Côte d'Ivoire	**KP**	Democratic People's Republic of Korea	**NZ**	New Zealand		
CM	Cameroon			**PL**	Poland		
CN	China	**KR**	Republic of Korea	**PT**	Portugal		
CU	Cuba	**KZ**	Kazakstan	**RO**	Romania		
CZ	Czech Republic	**LC**	Saint Lucia	**RU**	Russian Federation		
DE	Germany	**LI**	Liechtenstein	**SD**	Sudan		
DK	Denmark	**LK**	Sri Lanka	**SE**	Sweden		
EE	Estonia	**LR**	Liberia	**SG**	Singapore		

A DUAL-FUEL METHOD FOR BOOST FUEL SUBSTITUTION IN TURBO-CHARGED DIESEL ENGINES

BACKGROUND

The present invention relates to fuel systems and more particularly relates to a system in which a second fuel is admitted as a substitution for boost fuel in a turbo-charged diesel engine. The invention also relates to a dual fuelling system which may be retro-fitted in a simple manner to an existing single-fuel turbo-charged diesel engine.

PRIOR ART

Diesel engine operation is typically controlled by the fuel injection pump. Turbo-charged diesel engines introduce a degree of complexity to the control of the engine, over normally aspirated diesel engines due to the fact that the amount of air admitted to each cylinder for each cycle (air charge), changes as a result of the change in manifold air pressure. This change in air charge coupled to the requirement to run diesel engines lean, requires the inlet manifold pressure to be an input to any system controlling the engine. Therefore, on turbo-charged diesel engines, typically a pressure line connects the inlet manifold to an aneroid on the injection pump to facilitate the variation in fuel flow rate due to variations of inlet manifold pressure.

Other means of facilitating this variation of fuel flow rate are known. For example, one system electronically senses the manifold pressure, then the output of the electronic sensor is processed, with the output of this processor electrically driving an electromagnetic device associated with the injection pump.

US patent 4,517,928 (corresponds to Australian application 17878/83) discloses an existing system for using a gas such as LPG as a secondary boost fuel in diesel engines. According to the arrangement shown in the US patent a signal proportional to the momentary effect of fuel consumption controls the gas supply to the engine. A valve in a gas supply line is connected to a control lever of the engine governor to allow gas supply only in a load range above approximately 25% and up to a maximum of approximately 40% of the full load total fuel consumption. In the lower range, incomplete combustion

of the gas is avoided and in the high low range destination and overload are avoided and the opacity of the exhaust is improved. The consumption of liquid fuel is reduced and the exhaust gas composition is improved. An adjustable stop in the arrangement described limits the maximum injectable liquid fuel quantity when the engine is operated in a duel fuel mode. Whilst it is known to retrofit a dual fuel system incorporating diesel fuel and boost LP gas fuel as a substitution for diesel fuel, the known arrangements require considerable interference with the existing engine equipment and more particularly requires significant interference with the diesel fuel pump and aneroid. Whilst US patent 4,517,928 teaches no intervention into the inside of the fuel pump or the governor there is still required at the outside of the fuel pump a stop for a control lever. Thus, a limiter for the control rod has to be added increasing the labour in retrofitting.

Dual fuel systems used with diesel engines involve a mixture of diesel and gas wherein gas is used as boost fuel responsive to changes in a predetermined engine parameter. The principle of this system is to save diesel fuel by injecting a lesser quantity and replacing this with lower cost LPG and also to avoid diesel exhaust smoke at full load running.

This inevitably results in power loss so in order to regain the original power LPG is added to the inlet air. According to the modification is effected so that the engine will have the same power with dual fuel as if it was using a 100% diesel. At fuel engine power load about 30% diesel can be replaced. When more diesel is replaced the engine will demonstrate a phenomenon known as knocking will stop at part load where peak pressures in the cylinders are lower more diesel fuel can be replaced by LPG up to about 40%. At less than a quarter of full load of the engine no LPG may be added to the inlet system because of insufficient combustion.

INVENTION

The present invention provides an alternative boost fuel substitution system for a diesel engine which may be used in conjunction with and retro fitted to existing fuel systems.

The dual fuel system according to the present invention is characterised by the inclusion of a second fuel in place of diesel fuel which would in single fuel operation have been introduced to the engine due to an increase in the inlet manifold air pressure as a result of the turbo-charger, and an increase in throttle position, typically known as boost fuel. The system according to the present invention is particularly suitable for retro-fitting to conventional diesel engines without disassembly of the injection pump.

In one form, the invention is further characterised by the interruption of the manifold air pressure input to the injection pump, and the substitution for the variation of diesel fuel flow in dependence on manifold pressure and the metering of a second fuel in response to a chosen engine operating parameter or a combination of parameters. Suitable parameters include engine revolutions per minutes (R.P.M.), inlet manifold pressure, throttle position and diesel fuel flow rate. Preferably, the total fuel admitted to the engine is controlled so as to maintain the overall air-fuel-ratio in the lean range.

According to the present system, the signal sent to the injection pump to indicate that the manifold air pressure has increased, is interrupted. The interruption makes the injection pump behave as if the inlet manifold air pressure is close to atmospheric. This disables the ability of the injection pump to add the boost diesel fuel to the engine. The boost diesel fuel is substituted with a second fuel. The second fuel is admitted to the engine by a means other than the injection pump used for the diesel fuel. Typically, this is by a separate injection system (for direct injection) or by admission to the inlet manifold.

In one broad form the present invention comprises:

an assembly for boost fuel substitution in a turbo charged diesel engine; the assembly including;

a diesel engine including an inlet manifold and an exhaust manifold;

a turbocharger in communication with said inlet manifold;

first and second reservoirs of two alternate fuel types in communication with said engine;

a fuel injection pump including an aneroid intermediate a first reservoir of one of said two fuel types and said inlet manifold;

a control valve intermediate a second reservoir of said fuel types and said inlet manifold;

characterised in that the assembly includes at least two solenoids each capable of moving between two states of operation; wherein a first of said solenoids is located between the inlet manifold and said fuel injection pump and the second solenoid is located between said inlet manifold and said control valve;

wherein, said first solenoid responsive to a predetermined engine operating parameter moves between a first state in which pressurised air from said inlet manifold communicates with said aneroid and isolates atmospheric air and a second state in which manifold air to the fuel injection pump is interrupted and atmospheric air is in communication with the aneroid and pressurised air from said inlet manifold terminates at said first solenoid;

and wherein the second solenoid responsive to said predetermined engine operating parameter or a second parameter is located between said inlet manifold and said control valve and moves between a first state in which atmospheric air is in communication with said gas metering valve and a second state in which pressurised air from said inlet manifold is in communication with said control valve and atmospheric air is isolated from control valve;

wherein when the first solenoid isolates said first fuel type, the second solenoid operates to allow boost fuel provided by said second fuel type to communicate between the second fuel source and the engine.

Preferably the aneroid is in direct contact with pressurised air from the manifold and responds to that pressure. Alternatively, the aneroid is in electrical contact with a sensor attached at or near said inlet manifold such that the sensor after sensing the air pressure in the manifold causes a signal to be transmitted to the aneroid.

In another form the present invention comprises;

an assembly for boost fuel substitution in turbo charged diesel engines; the assembly including;

a diesel engine including an inlet manifold and an exhaust manifold;

a turbocharger in communication with said inlet manifold;

first and second reservoirs of two alternate fuel types in communication with said engine;

a fuel injection pump including an aneroid intermediate the first reservoir of one of said two fuel types and said inlet manifold;

a control valve intermediate a second reservoir of said fuel types and said inlet manifold;

characterised in that the assembly includes at least two solenoids each capable of moving between two states of operation; wherein a first of said solenoids is located between the inlet manifold and said fuel injection pump and the second solenoid is located between said inlet manifold and said control valve;

wherein, said first solenoid responsive to a predetermined engine operating parameter moves between a first state in which pressurised air from said inlet manifold communicates with said aneroid and isolates atmospheric air and a second state in which manifold air to the fuel injection pump is interrupted and atmospheric air is in communication with the aneroid and pressurised air from said inlet manifold terminates at said first solenoid;

and wherein the second solenoid responsive to said predetermined engine operating parameter or a second parameter is located between said inlet manifold and said control valve and moves between a first state in which atmospheric air is in communication with said gas metering valve and second state in which pressurised air from said inlet manifold is in communication with said control valve and atmospheric air is isolated from the control valve;

wherein when the first solenoid is in its second state, the second solenoid is in its second state such that when first fuel is isolated from the engine by operation of the first solenoid, the operation of the second solenoid allows delivery of boost fuel from the second fuel source to the engine.

In another broad form the present invention comprises:

a system for boost fuel substitution in a turbo charged diesel engine of the high speed type;

the system including a diesel engine including an inlet manifold and an exhaust manifold, a turbocharger in communication with said inlet manifold;

a first fuel reservoir of diesel fuel and a second reservoir of gas fuel each available for delivery to said engine;

a diesel fuel injection pump including an aneroid intermediate the first reservoir and the inlet manifold;

a gas control valve intermediate the second reservoir and the inlet manifold for regulating the pressure of gas supplied from the second reservoir;

wherein the system further includes first and second solenoids each capable of movement between two states of operation; wherein the first of said solenoids is located between the inlet manifold and said diesel fuel pump and the second is located between the inlet manifold and said gas control valve;

wherein the operation of each said solenoid is responsive to a predetermined engine operating parameter;

said first solenoid moves between a first operating condition in which the inlet manifold pressure is in communication with the aneroid and fuel pump and a second operating condition in which the inlet manifold pressure is isolated from said fuel pump limiting flow of diesel to the engine to a predetermined maximum and ambient air is accessible to the aneroid;

said second solenoid moves between a first operating condition in which gas fuel is isolated from the engine and ambient air is in communication with the gas control valve and a second operating condition in which gas fuel is in communication with said diesel engine wherein when the first solenoid is in its first operating state the second solenoid is in its first operating state and when the first solenoid is in its second operating state the second solenoid is in its second operating state;

wherein the solenoids are influenced by an electrical signal or signals initiated by a sensor or sensor which detects a predetermined engine operating parameter or parameters.

In another broad form the present invention comprises;

a system for boost fuel substitution in a turbo charged diesel engine; the system including;

a diesel engine including an inlet manifold and an exhaust manifold;

a turbocharger in communication with said inlet manifold;

first and second reservoirs of diesel and gas respectively selectively in communication with said engine;

a fuel injection pump including an aneroid intermediate the first reservoir of diesel and said inlet manifold;

a control valve intermediate the second reservoir of gas and said inlet manifold;

characterised in that the system includes a single solenoid capable of moving between two operational states;

wherein said single solenoid is located intermediate the inlet manifold and the fuel pump and control valve such that the solenoid is capable of allowing communication between the first or second fuel and the engine responsive to a single dictated by a predetermined engine operating parameter;

wherein said single solenoid moves between a first operational state which allows communication between pressurised air from the inlet manifold and said aneroid and isolates pressurised air access to said gas control valve and a second operational state in which communication between the inlet manifold and the aneroid of the fuel pump is isolated and communication between the inlet manifold pressurised air and the control valve is allowed;

wherein when the solenoid is in its first operational state the first fuel is delivered to the engine and when the solenoid is in its second operational state boost fuel comprising the second fuel is substituted for the first fuel wherein the solenoid operates responsive to predetermined engine operating parameters.

The advantages of the boost fuel substitution system of the present invention, when fitted to a turbo-charged diesel engine include the following:

the process of adapting a turbo-charged diesel engine to dual-fuelled operation can be achieved without disassembly of the injection pump, nor does it require any physical alteration to the internal mechanisms of the injection pump or the body of the injection pump. Because the injection pump has not been modified, any repairs or calibration of the injection pump can still be carried out according to the manufacturer's specifications.

The system can be converted back to 100% diesel operation while the engine is in operation. Through the use of a gaseous second fuel, typically liquefied petroleum gas

or natural gas, particulate emissions can be reduced. Since only the boost component of the diesel fuel is replaced with the second fuel, knock problems associated with high substitution levels of gaseous second fuels can be avoided. This occurs due to the fact that the boost fuel flow rate typically represents less than 45% of the total fuel flow rate, based on energy flow per unit time. Knock problems associated with gaseous second fuels typically occur at higher substitution levels. Rough idle problems associated with some high substitution level, duel-fuelled engines are avoided. At idle, there is no significant boost of the inlet manifold air pressure, above ambient conditions. Therefore, at idle, the engine would be operating on or very close to 100% diesel.

The present invention will now be described in more detail according to a preferred but non limiting embodiment and with reference to the accompanying illustrations:

Figure 1: shows a schematic layout of the relationship of the duel solenoid arrangement fitted to a dual fuel system;

Figure 2: shows a cross sectional elevation of a dual change over solenoid arrangement according to a preferred embodiment wherein a first solenoid prevents communication between the inlet manifold and an aneroid and the other solenoid activates boost fuel;

Figure 3: shows the arrangement of figure 2 whereby the first solenoid allows communication between the inlet manifold and the aneroid and the second solenoid allows communication between a gas control valve and ambient air thereby preventing passage of boost fuel to the engine;

Figure 4: shows an alternative to the arrangement of figures 2 and 3 with the position of the ambient air access port in the gas circuit altered and which activates the gas fuel circuit and renders the primary fuel circuit inactive;

Figure 5: shows the solenoid arrangement of figure 4 wherein the gas fuel circuit is inactivated by the second solenoid and the first solenoid allows communication between the inlet manifold and aneroid; and

Figure 6: shows a typical circuit diagram describing electrical links between the battery source and operating solenoids.

The invention will be described, by way of example only, with reference to two embodiments for interruption to the inlet manifold air pressure input to the injection pump.

The first is one in which a connection is made between the inlet manifold, downstream of the turbo-charger, and an aneroid associated with the injection pump. The second system is one in which the inlet manifold air pressure is electronically sensed, and an electrical input is made to the injection pump.

Referring to figure 1 there is shown a schematic layout of an assembly for substitution of boost fuel in a diesel engine according to one embodiment. Figure 1 shows conventional diesel engine 1 including an inlet manifold 2 in communication with turbo charger 3. Turbocharger 3 is in communication with a conventional air cleaner 4 via air line 5.

According to a preferred embodiment, the assembly comprises co-operating dual solenoids 6 and 7 the first of which is located intermediate the inlet manifold 2 and fuel pump 8. Solenoid 6 is in communication with an aneroid 9 associated with fuel pump 8 via a pressurised air line which allows according to one embodiment aneroid 8 to detect either directly or via a signal generated by a sensor at or near the inlet manifold the level of air pressure at inlet manifold 2. Fuel pump 8 is connected to a diesel fuel reservoir 10 from which diesel fuel is delivered to the engine responsive to engine operating parameters. Solenoid 7 is in communication with inlet manifold 2 and a gas metering valve 11 which regulates flow of gas along gas supply line 12 from a reservoir 13 of LP gas which comprises the second fuel. Supply line 12 further includes a conventional converter 14 wherein LP gas is converted to a vapour in a known manner. Hot water from the engine via line 15 converts the liquid to a vapour and in doing so warms the gas from stop the unit freezing as LPG when released from the liquid state to form a gaseous state. The gas travels along line 12 towards gas metering valve 11 which is operated by a switch from the foot cycle. The switch may be one of the magnetic type or alternative form of switch to suit requirements. Once the gaseous vapour engages gas metering valve 11, turbo charger 3 at this time is not generating pressure although the foot throttle switch turns the system on at the solenoid valve downstream of gas metering valve 11.

According to one form of operation, gas metering valve 11 allows LP gas to travel responsive to the action of solenoid 7 into the engine. As the LP gas is boost fuel, no gas can enter the engine until such time as the turbo charger 3 generates enough pressure to push on a diaphragm inside gas metering valve 11 which in turn activates a plunger enabling gas feed through the metering valve. If turbo pressure is low the introduction of gas into the engine is very light but as turbo pressure increases, this will have the effect of opening gas metering valve 11 in order to increase the flow rate of gas to the engine. Thus, the turbo charger does not activate until the engine is in a high torque condition at which time the turbo charger operates. When this occurs, instead of the diesel fuel pump 8 advancing boost fuel towards the engine when gas is delivered to the engine responsive to a predetermine engine operating parameter, diesel fuel cannot enter the engine. Gas cannot enter the engine until such time as turbo charger 3 starts to operate as the torque value of the engine enters its upper range. Isolating inlet manifold air pressure from aneroid 9 of fuel pump 8 isolates diesel fuel and allows LP gas to be substituted as boost fuel. Parameters employed in the interruption of the inlet manifold air pressure input to the injection pump resulting in metering of the second fuel based on some or all of the following:

engine R.P.M, inlet manifold air pressure, throttle position, flow rate of the diesel fuel and adding the second fuel to the engine.

Figures 2 to 5 describe in more detail the operation of the dual solenoid arrangement according to a preferred embodiment of the invention.

Referring to figure 2 there is shown an enlarged cross sectional view of a dual solenoid circuit 20 which establishes intermittent links between an inlet manifold of a diesel engine and two alternative fuel sources. The dual solenoid in circuit 20 to be described below corresponds to solenoids 6 and 7 of figure 1. Dual solenoid circuit 20 includes a first solenoid 21 which is placed intermediate, engine manifold 2 and fuel pump 8 with aneroid 9. Dual solenoid circuit 20 further includes second solenoid 22 disposed intermediate inlet manifold 2 and gas metering valve 11 which controls access to a second fuel from reservoir 13. First solenoid 21 controls the passage of primary diesel fuel from reservoir 10 and interrupts the primary fuel flow circuit normally responsive to

manifold air pressure such that primary fuel may be isolated responsive to a predetermined engine parameter enabling second solenoid 22 to provide substitute boost fuel to the diesel engine. In normal operation the engine is supplied with diesel fuel from fuel source 10 with the amount of fuel delivered to the engine responsive to air pressure at the inlet manifold. The dual solenoid system which also includes turbo charger 3 operates in response to increased pressure generated by the turbo charger which is delivered to the inlet manifold 2. According to one embodiment a signal is sent to the injection pump 8 to indicate that the manifold air pressure has increased. This causes interruption to the supply of diesel fuel and isolates fuel pump 8 from manifold air pressure such that ambient air is then in communication with the aneroid 9. Solenoid 21 includes solenoid body 23 having an internal chamber 24 which, subject to the position of plunger valve 25, able to communicate with air delivery line 26, chamber 27 and pressurised air chamber 28. Solenoid 21 further includes an upper body 29 housing an actuating mechanism energised by a control circuit which is linked to the control circuit via electrical linkage 30. The actuating mechanism includes biasing spring 31 which operates responsive to an electrical signal via link 30 such that plunger valve 25 moves between a location wherein gate 32 is free of orifice 33 and bears via surface 34 on shoulder 35 of orifice 36 and a second position in which plunger 25 bears via surface 37 on shoulders 38 of orifice 33. The action of plunger valve 25 is regulated by electrical signals responsive to detection of inlet manifold pressure. As shown, plunger valve 25 of first solenoid 21 restricts the flow of pressurised air along pressurised airline 39 such that pressurised air from inlet manifold is unable to travel beyond pressurised air chamber 28. This allows ambient air to enter solenoid body 23 via port 40 such that ambient air is delivered via delivery air line 26 to aneroid 9. Accordingly the configuration of first solenoid 21 and more particularly the position of plunger valve 25 indicates that boost fuel is isolated from the diesel engine from the first fuel source in favour of substitution of boost fuel from the second fuel source. Second solenoid 22 has a similar configuration to that described for first solenoid 21 but second solenoid 22 is dispersed between inlet manifold 2 and gas metering valve 11. When first solenoid 21 isolates the fuel from a first fuel source when the aneroid detects ambient air pressure, second solenoid 22 operates to establish communication between inlet manifold 2 and second fuel or boost fuel source. As shown in figure 2 second solenoid 22 is configured

similarly to first solenoid 21 and includes solenoid body 50, ambient air chamber 51 in communication with port 52 which is open to atmospheric air and orifice 53 defined by shoulder 54 which receives oscillating plunger valve 55. Plunger valve 55 includes gate 56 which when communication is open between the boost fuel source and the inlet manifold, locates on shoulder 54. Solenoid body 50 further includes pressurised air chamber 56 which is in permanent communication with inlet manifold 2. Solenoid body 55 further includes upper shoulder 57 which acts as a bearing surface for upper surface 58 of plunger 55 when pressurised air from inlet manifold is isolated from boost fuel reservoir 13. In this configuration ambient air is available via port 52 and air chamber 51 to gas metering valve 11. When that occurs, plunger valve 25 of solenoid 21 engages shoulder region 38 via surface 37 in order to open communication between inlet manifold 2 and first fuel reservoir 10 via aneroid fuel pump.

Figure 3 shows the arrangement set out in figure 2 and is numbered in accordance with the integers of figure 2. The fundamental difference between the arrangement in figure 3 and that shown in figure 2 is that in figure 3 solenoid 21 seats on shoulder 38 via gate 32 so as to enable communication between pressurised air at the inlet manifold and the first fuel source. Sealing orifice 33 prevents ambient air access to aneroid 9 which ensures that the primary diesel fuel will be delivered to the engine. Plunger valve 25 will close access to ambient air once activated by the electrical control circuit in response to inlet manifold pressure. At the same time, second solenoid 22 closes the pressurised air circuit and allows access of ambient air via chamber 51 to gas metering valve 11. Referring to figure 4 there is shown an alternative dual solenoid arrangement 50 shown in figure 4 includes solenoid 51 which is identical to solenoid 21 shown in figure 3. Furthermore, solenoid 51 operates in an identical manner to that described for solenoid 21. Where dual solenoid arrangement 50 differs from that described in figures 2 and 3 is the arrangement of solenoid 60 which is configured differently from the corresponding solenoid 22 described in the dual solenoid arrangement 20 in figure 3. Solenoid 60 includes solenoid body 61 having an internal chamber 62, which subject to the position of plunger 63 will allow communication by air delivery line 64 between gas metering valve 11 (see figure 1) and inlet manifold 2 (see figure 1). When plunger 63 is retracted there is free communication of pressurised air between inlet manifold 2 and gas metering valve

11 and in this configuration gate 65 seats on shoulder 66 of orifice 67 isolating internal chamber 68. Solenoid arrangement 50 shows solenoid 51 isolating pressurised air in pressurised air line 69 from aneroid 9. In this configuration ambient air is in direct communication with aneroid 9 preventing flow from diesel fuel to the engine. The fundamental difference between solenoid 22 and solenoid 60 is the position of the ambient air chamber and the opposite operation of valves 56 and 63 respectively in respect of their position when pressurised air is in communication with the gas moving valve and when ambient air is in communication with the gas metering valve. These differences are merely a matter of manufacturing choice or selection enabling a possible selection of solenoids which operate differently but performing a similar roll sequentially isolating or allowing access to respective fuels.

Figure 5 shows the arrangement of figure 4 this time plungers 70 and 63 respectively are both seated against corresponding orifices as distinct from opposing orifices to allow communication between inlet manifold and aneroid 9 in the case of solenoid 51 and isolate pressurised air from inlet manifold 2 to gas control valve. Figures 4 and 5 therefore illustrate an alternative configuration for the second solenoid by virtue of the alternative location of ambient air port 71.

In a more general sense one solenoid valve may be employed to control the dual fuel system. In this case a valve which has two inputs and two outputs is used whereby the inlet manifold air pressure would be connected to the one input and atmospheric pressure would be connected to the second input. This is illustrated in Figure 7. The outputs of the valve would be connected to the aneroid associated with the injection pump, and the input to the second fuel metering system. The valve could be configured in such a way that when the valve is de-energised, the inlet manifold air pressure would be connected to the injection pump aneroid, and the gas metering system would be connected to atmospheric pressure. Typically, if atmospheric pressure is input to the second fuel metering system, the second fuel would not be admitted to the engine. Therefore, with the valve in the de-energised state, the engine would be under 100% diesel operation.

When the valve is energised, the inlet manifold air pressure would be connected to the second fuel metering system and the injection pump aneroid would be connected to atmospheric pressure, and the engine would be operating in dual-fuel mode. Since the injection pump registers the manifold pressure as being atmospheric or close to atmospheric, it will behave as if there is no boost air being admitted to the engine and will not admit boost diesel fuel to the engine.

Although this embodiment has been described with only one valve, it is acknowledged that it may be achieved with more than one valve, and it may be achieved with valves with more than two inputs, and or more than two outputs. Furthermore, the valve switching may be opposite to that described above, in that the valve can be used whereby in the energised state, the inlet manifold air pressure would be connected to the injection pump aneroid. The valve would typically be electro-mechanical, such as a solenoid so that switching the valve on and off can be achieved remotely and quickly.

In the second system, the electrical connection from the manifold air pressure sensor would be interrupted as illustrated in Figure 8. A reference signal would be sent to the processor which has the electrical properties which are characteristic of the sensor output when the inlet manifold air pressure is close to ambient.

Metering of the second fuel should be constrained to maintain the overall engine operation to be lean. This is desirable to ensure that the production of particulates is not in violation of emission control legislation. The second fuel flow may be introduced to the engine in a variety of known ways, including manifold introduction (commonly referred to as fumigated introduction for gas) or by a second injection system which may or may not be direct in-cylinder injection.

The function of the system will be described below in reference to an engine that has a connection between the inlet manifold and the aneroid associated with the injection pump. The input to the injection pump could alternatively be taken from the outlet of the turbocharger compressor.

The valve is energised when some critical constraints are met. These constraints would include some or all of the following:

Sufficient fuel level in the second fuel tank
Engine oil pressure is above a present valve
Engine R.P.M. is between set limits
Throttle position is between set limits

If the valve is energised, atmospheric air pressure is exposed to the aneroid associated with the diesel injection pump and the diesel injection pump does not admit boost diesel fuel. The second fuel metering system admits the second fuel essentially to supplement the loss of the boost diesel fuel. The metering process is done according to the engine conditions as listed above. If the valve is de-energised, the diesel pump will admit the boost diesel fuel as required. This change-over between dual-fuel operation and 100% diesel fuel operation can occur with the engine in operation.

The circuit shown in figure 6 includes a power source 80 formed by a conventional battery which may be isolated by a conventional on/off switch 81. Included in the circuit is a reset switch 82 which is in electrical communication with storage reservoir 83 via actuating solenoid 84. Another part of the circuit links relays which together link the two circuits which in turn are linked to a mercury switch 85. The mercury switch is useful should a vehicle become involved in an accident altering its attitude dramatically in which case the mercury switch will immediately isolate the system immediately shutting down the flow of electricity to the solenoid 84 on gas tank 83 preventing any further flow of liquid LPG anywhere through the system. This provides a safety feature and will minimise risk in the event of a fire. In additional to the mercury switch is pressure switch 86 which enables pressure control. This switch keeps pressure from the gas bottle at a certain level and keeps the circuit open on the energising side of relays 87. If the pressure drops off by way of a ruptured line or the like or if the vehicle runs out of gas this will immediately break the circuit and will convert the relay 87 to the off position. In this position the throttle switch 88 will be isolated which in turn will shut off the solenoid on the downstream side of the gas metering valve. If the throttle switch is

not operating because there is no power to it, the system will be immediately closed down. The circuit will also close down via the coil which operates a second relay. If there is no power to the second relay such that red indicator light comes on which indicates that the gas is off and this isolates the whole system from operating. If the gas tank is full and the circuit operates relay 1 and in turn operates relay 2, this will operate change over solenoid valve 90 and 91 thus when solenoid 90 is normally open when there is no power on it the system returns from gas operation to solely diesel fuel operation. In this condition the air pressure from the turbo charger is delivered to the aneroid on the fuel pump according to normal operation. When the turbo charger is operative and pressure is on the gas tank and the on/off switch is on, this changes a relay so that a normally closed relay opens and one normally open closes. This results in air pressure from the pressure side of the turbo charger being isolated from the aneroid and being diverted back through the system and onto the metering valve of the gas. When this happens, green light 92 illuminates on the dashboard of the vehicle indicating that gas is on. Where a driver of the vehicle puts his foot on the throttle it automatically opens the shut off solenoid on the downward side of the metering valve allowing gas to flow when the turbo charger builds up enough pressure to open the metering valve. The circuit also includes reset switch 82 just in case the vehicle runs out of gas to compensate for inability to turn the gas back on as the pressure switch has opened the circuit and no power can be delivered through the line, so it is essential to have a reset button. As soon as the reset button is activated this enables power to the tank solenoid 84 which as a consequence allows liquid to flow through the line which operates pressure switch 86. Once the operator's finger is removed from the reset button the circuit remains open because relay number 1 and number 2 are activated creating an opposite circuit effect.

It will be recognised by persons skilled in the art that numerous variations and modifications may be made tot he invention as broadly described herein without departing from the overall spirit and scope of the invention.

THE CLAIMS:

1. An assembly for boost fuel substitution in turbo charged diesel engines; the assembly including;

a diesel engine including an inlet manifold and an exhaust manifold;

a turbocharger in communication with said inlet manifold;

first and second reservoirs of diesel and gas respectively selectively in communication with said engine;

a fuel injection pump including an aneroid intermediate the first reservoir of diesel and said inlet manifold;

a control valve intermediate the second reservoir of gas and said inlet manifold;

characterised in that the assembly includes at least two solenoids each capable of moving between first and second operational states; wherein a first of said solenoids is located between the inlet manifold and said fuel injection pump and the second solenoid is located between said inlet manifold and said control valve;

wherein, said first solenoid responsive to a predetermined engine operating parameter moves between a first state in which pressurised air from said inlet manifold communicates with said aneroid and atmospheric air is isolated from the aneroid and a second state in which manifold air to the fuel injection pump is interrupted and atmospheric air is in communication with the aneroid and pressurised air from said inlet manifold terminates at said first solenoid;

and wherein the second solenoid responsive to said predetermined engine operating parameter and/or signal is located between said inlet manifold and said control valve and a moves between a first state in which atmospheric air is in communication with said gas metering valve and second state in which pressurised air from said inlet manifold is in communication with said control valve;

wherein when the first solenoid isolates said first fuel type, the second solenoid operates responsive to a signal to allow boost fuel provided by said second fuel type to communicate between the second fuel source and the engine.

2. An assembly for boost fuel substitution in turbo charged diesel engines; the assembly including;

a diesel engine including an inlet manifold and an exhaust manifold;

a turbocharger in communication with said inlet manifold;

first and second reservoirs of diesel and LP gas respectively in communication with said engine;

a fuel injection pump including an aneroid intermediate a first reservoir of one of said two fuel types and said inlet manifold;

a control valve intermediate a second reservoir of said fuel types and said inlet manifold;

characterised in that the assembly includes at least two solenoids each capable of moving between first and second operational states; wherein a first of said solenoids is located between the inlet manifold and said fuel injection pump and the second solenoid is located between said inlet manifold and said control valve;

wherein, said first solenoid responsive to a predetermined engine operating parameter moves between a first state in which pressurised air from said inlet manifold communicates with said aneroid and atmospheric air is isolated from the aneroid and a second state in which manifold air to the fuel injection pump is interrupted and atmospheric air is in communication with the aneroid and pressurised air from said inlet manifold terminates at said first solenoid;

and wherein the second solenoid responsive to said predetermined engine operating parameter is located between said inlet manifold and said control valve and moves between a first state in which atmospheric air is in communication with said gas metering valve and a second state in which pressurised air from said inlet manifold is in communication with said control valve;

wherein when the first solenoid is in its second state, the second solenoid is in its second state such that when first fuel is isolated from the engine by operation of the first solenoid, the operation of the second solenoid allows delivery of boost fuel from the second fuel reservoir to the engine.

3. A system for boost fuel substitution in a turbo charged diesel engine of the high speed type;

the system including a diesel engine including an inlet manifold and an exhaust manifold, a turbocharger in communication with said inlet manifold;

a first fuel reservoir of diesel fuel and a second reservoir of gas fuel each available for delivery to said engine;

a diesel fuel injection pump including an aneroid intermediate the first reservoir and the inlet manifold;

a gas control valve intermediate the second reservoir and the inlet manifold for regulating the pressure of gas supplied from the second reservoir;

wherein the system further includes first and second solenoids each capable of movement between two states of operation; wherein the first of said solenoids is located between the inlet manifold and said diesel fuel pump and the second is located between the inlet manifold and said gas control valve;

wherein the operation of each said solenoid is responsive to a predetermined engine operating parameter;

said first solenoid moves between a first operating condition in which the inlet manifold pressure is in communication with the aneroid and fuel pump and a second operating condition in which the inlet manifold pressure is isolated from said fuel pump limiting flow of diesel to the engine to a predetermined maximum and ambient air is accessible to the aneroid;

said second solenoid moves between a first operating condition in which gas fuel is isolated from the engine and ambient air is in communication with the gas control valve and a second operating condition in which gas fuel is in communication with said diesel engine wherein when the first solenoid is in its first operating state the second solenoid is in its first operating state and when the first solenoid is in its second operating state the second solenoid is in its second operating state;

wherein the solenoids are influenced by an electrical signal or signals initiated by a sensor or sensor which detects a predetermined engine operating parameter or parameters.

4. An assembly according to claim 1, 2 or 3 wherein the engine operating parameters include; engine revolutions per minute, inlet manifold pressure, throttle position and diesel fuel flow rate.

5. An assembly according to claim 4 wherein the gas control valve is located intermediate the second solenoid and said LP gas fuel source; said control valve operating in response to an electrical signal dictated by said operating parameters.

6. An assembly according to claim 5 wherein inlet manifold pressure may be determined from an outlet of said turbocharger.

7. An assembly according to claim 6 wherein inlet manifold pressure is measured by a sensor electrically connected to a circuit which includes said first and second solenoids.

8. An assembly according to claim 7 wherein the air pressure of the inlet manifold is sensed electrically by means of an electronic sensor which transmits a signal to one or both said solenoids.

9. An assembly according to claim 8 wherein the air pressure of the inlet manifold is mechanically sensed at said fuel pump.

10. An assembly according to claim 9 wherein the flow of said second fuel is regulated so as to ensure a lean mix.

11. A system for boost fuel substitution in a turbo charged diesel engine; the system including;

a diesel engine including an inlet manifold and an exhaust manifold;

a turbocharger in communication with said inlet manifold;

first and second reservoirs of diesel and gas respectively selectively in communication with said engine;

a fuel injection pump including an aneroid intermediate the first reservoir of diesel and said inlet manifold;

a control valve intermediate the second reservoir of gas and said inlet manifold;

characterised in that the system includes a single solenoid capable of moving between two operational states;

wherein said single solenoid is located intermediate the inlet manifold and the fuel pump and control valve such that the solenoid is capable of allowing communication between the first or second fuel and the engine responsive to a single dictated by a predetermined engine operating parameter;

wherein said single solenoid moves between a first operational state which allows communication between pressurised air from the inlet manifold and said aneroid and isolates pressurised air access to said gas control valve and a second operational state in which communication between the inlet manifold and the aneroid of the fuel pump is isolated and communication between the inlet manifold pressurised air and the control valve is allowed;

wherein when the solenoid is in its first operational state the first fuel is delivered to the engine and when the solenoid is in its second operational state boost fuel

comprising the second fuel is substituted for the first fuel wherein the solenoid operates responsive to predetermined engine operating parameters.

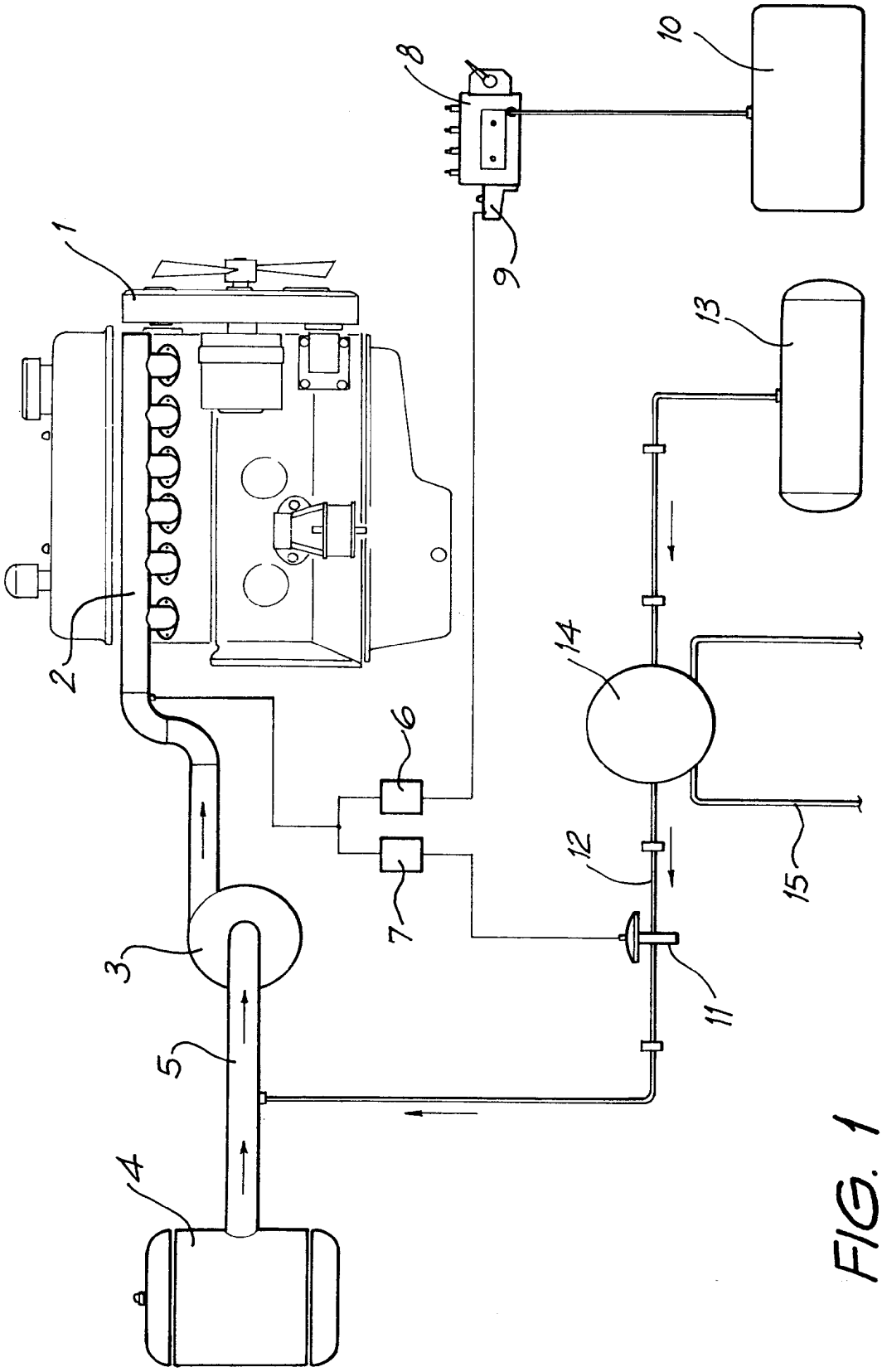

FIG. 1

Champion - EX2109, Page 238 of 403
Generac Power Systems, Inc. et al v. Champion Power Equip., Inc.
IPR2025-01438

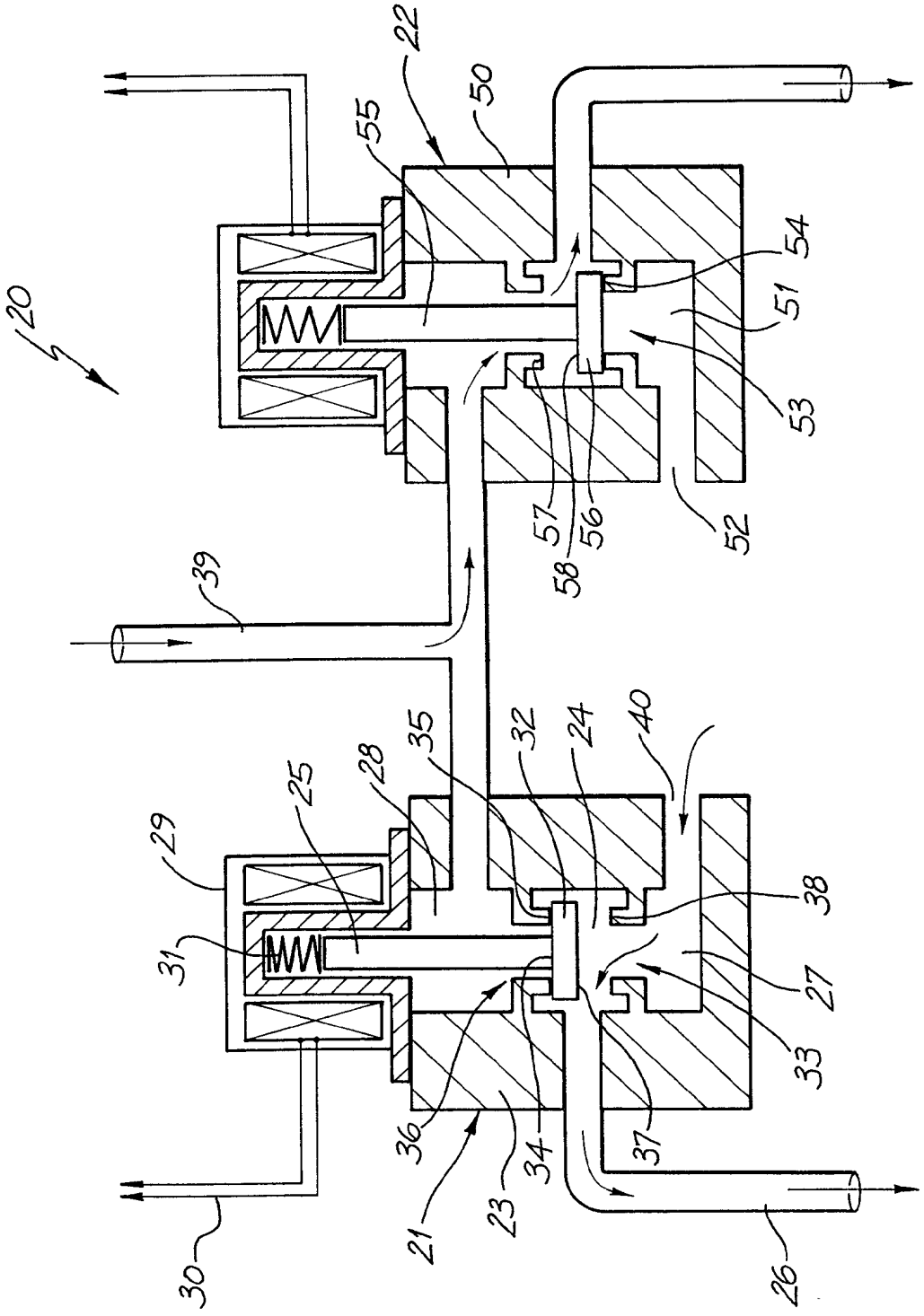

FIG. 2

Champion - EX2109, Page 239 of 403
Generac Power Systems, Inc. et al v. Champion Power Equip., Inc.
IPR2025-01438

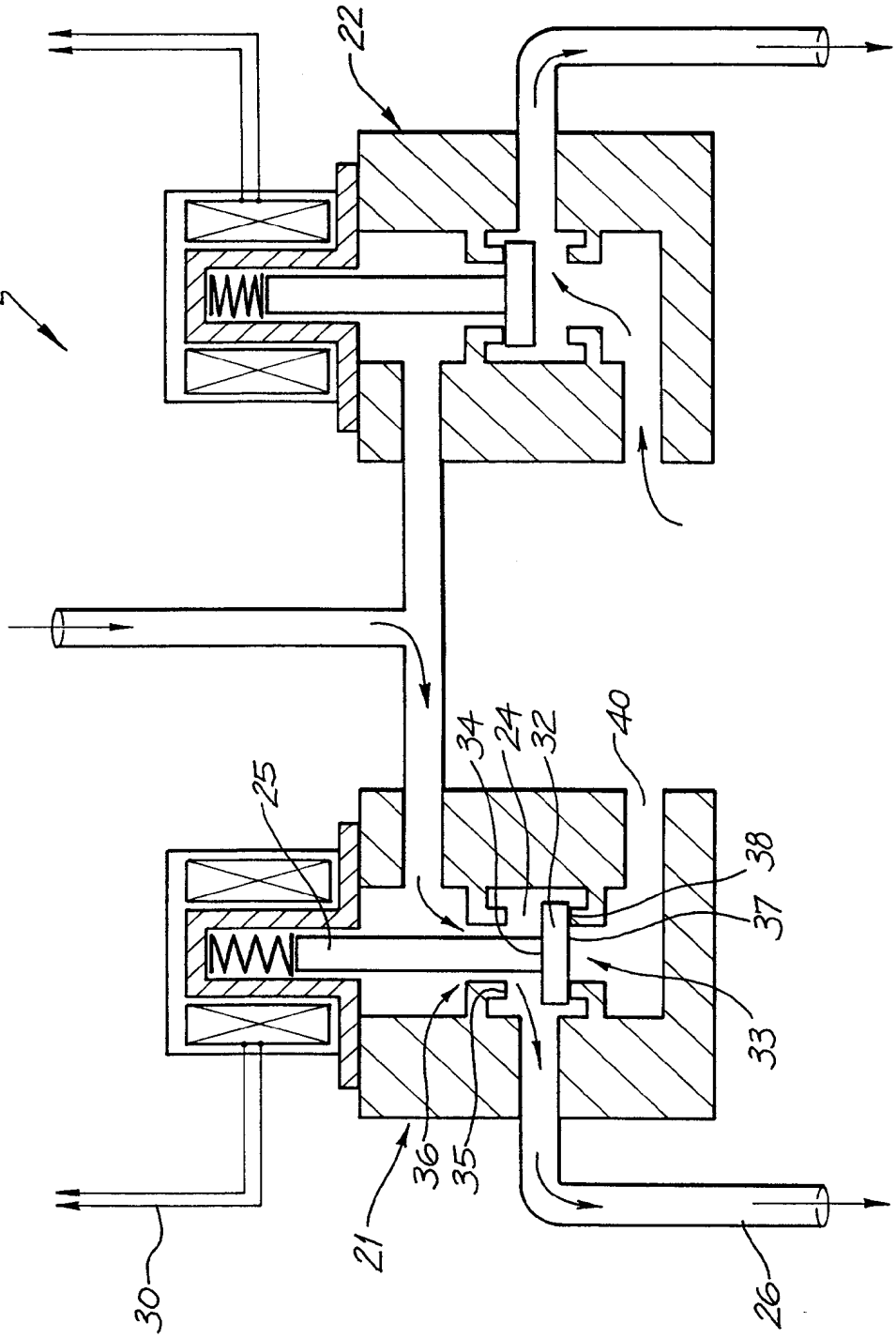

FIG. 3

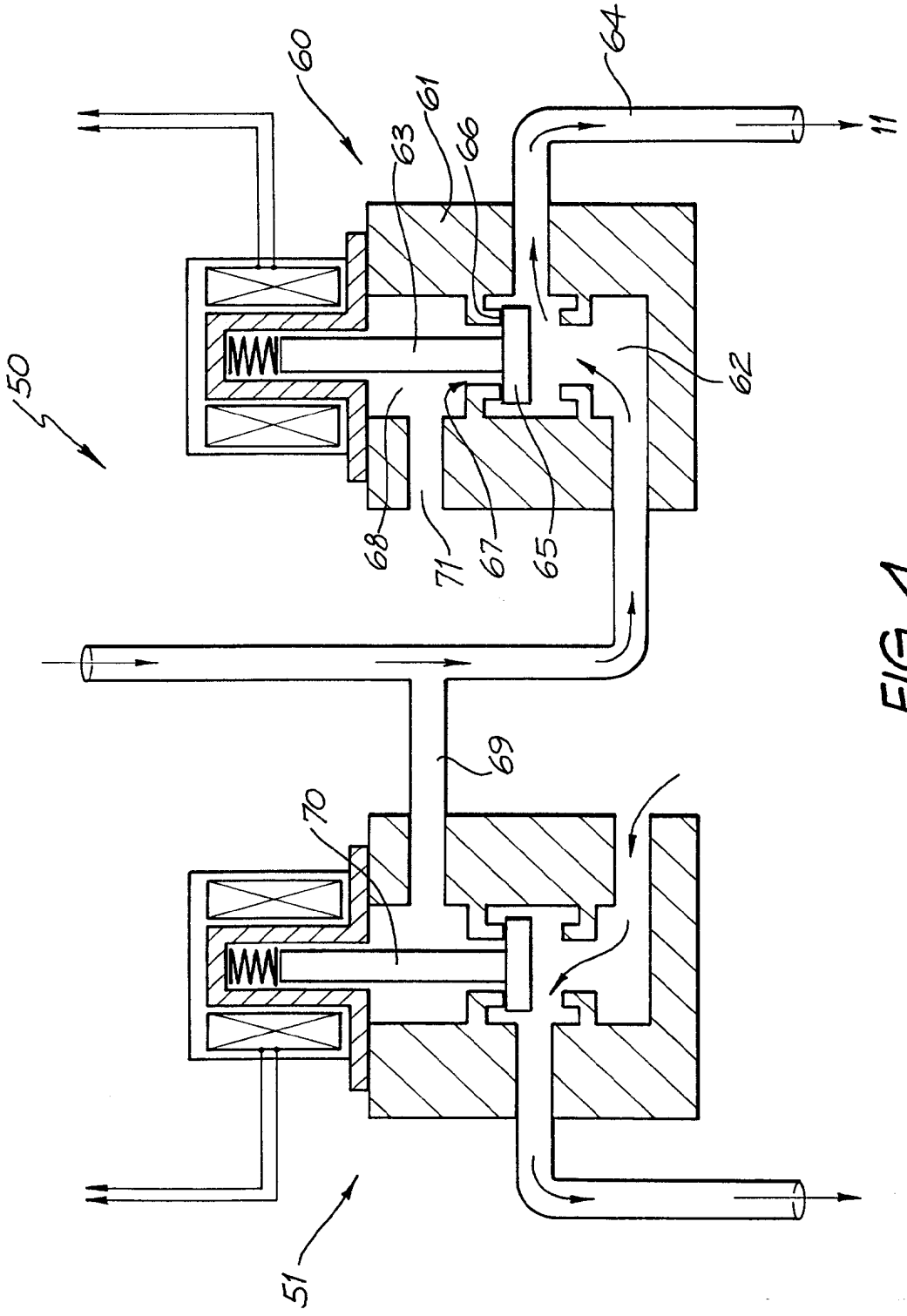

FIG. 4

Champion - EX2109, Page 241 of 403
Generac Power Systems, Inc. et al v. Champion Power Equip., Inc.
IPR2025-01438

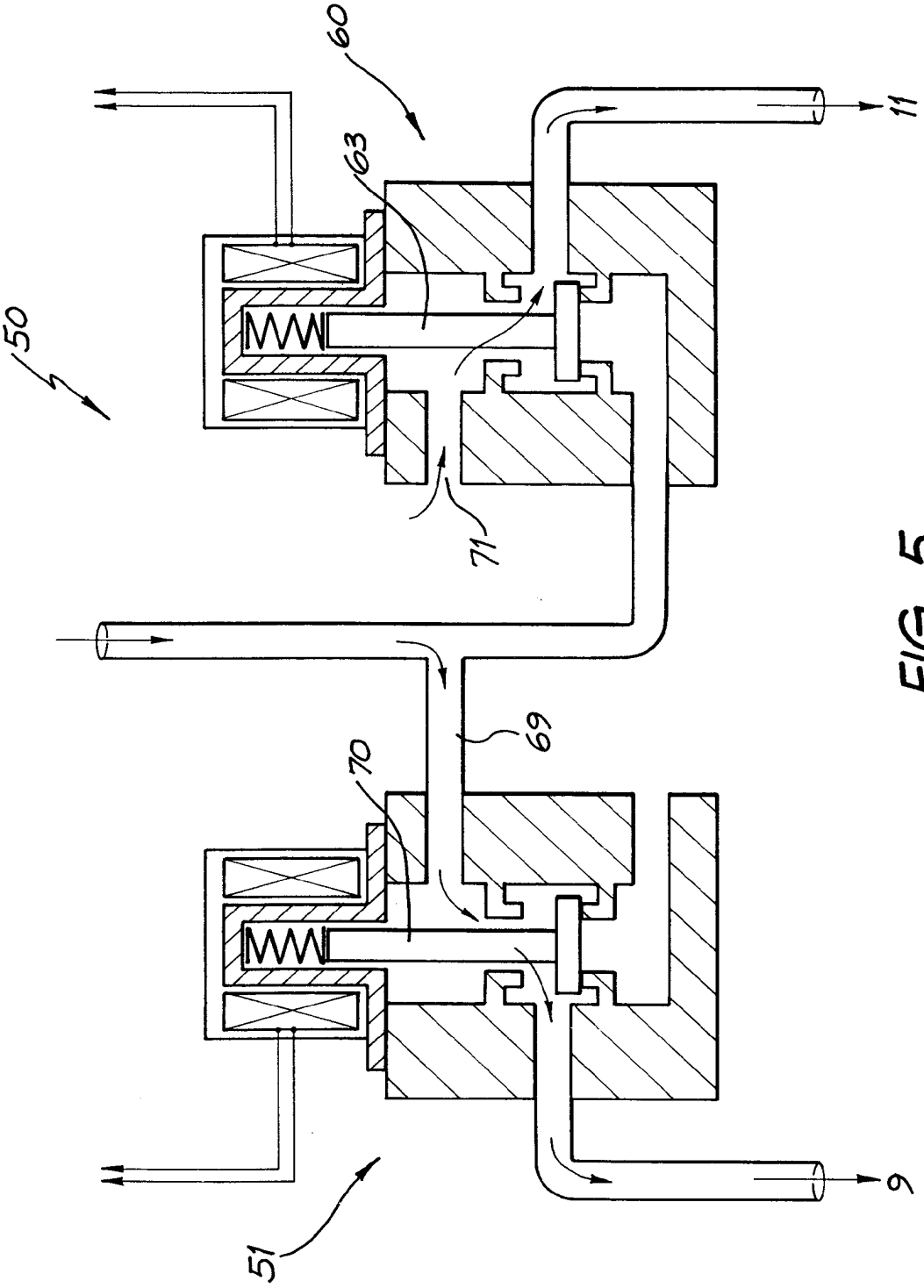

FIG. 5

Champion - EX2109, Page 242 of 403
Generac Power Systems, Inc. et al v. Champion Power Equip., Inc.
IPR2025-01438

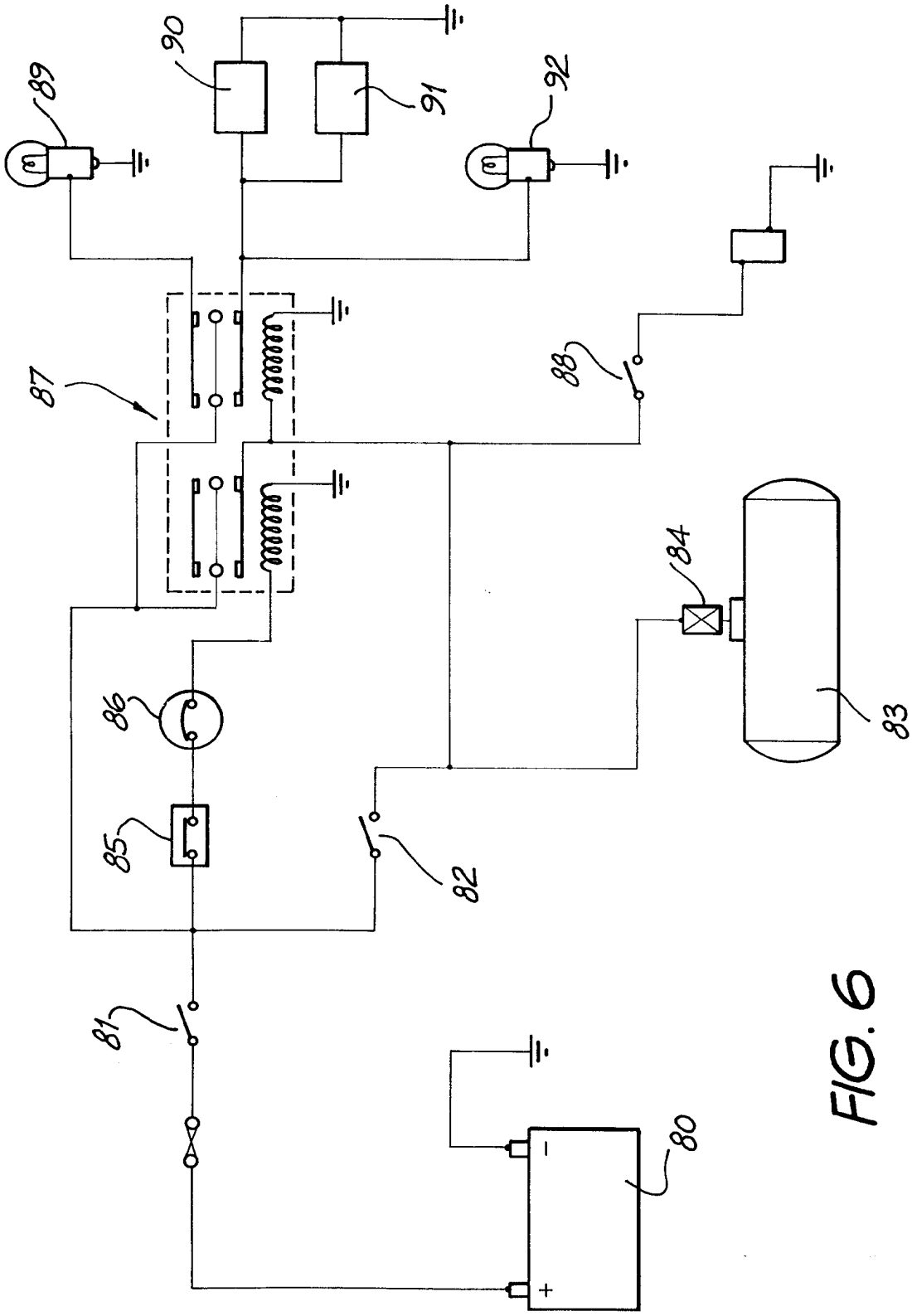

FIG. 6

INTERNATIONAL SEARCH REPORT

International Application No.
PCT/AU 98/00500

A. CLASSIFICATION OF SUBJECT MATTER

Int Cl[6]: F02M 43/00; F02D 19/08

According to International Patent Classification (IPC) or to both national classification and IPC

B. FIELDS SEARCHED

Minimum documentation searched (classification system followed by classification symbols)
F02M 21/02, 43/00, 02; F02D 19/08, 23/02

Documentation searched other than minimum documentation to the extent that such documents are included in the fields searched
AU: IPC as above

Electronic data base consulted during the international search (name of data base and, where practicable, search terms used)
WPAT + keywords

C. DOCUMENTS CONSIDERED TO BE RELEVANT

Category*	Citation of document, with indication, where appropriate, of the relevant passages	Relevant to claim No.
A	US 4619240 A (BEDFORD et al) 28 October 1986 whole document	
A	US 4517928 A (WOLTERS) 21 May 1985 whole document	

☐ Further documents are listed in the continuation of Box C

☒ See patent family annex

* Special categories of cited documents:

"A" document defining the general state of the art which is not considered to be of particular relevance

"E" earlier document but published on or after the international filing date

"L" document which may throw doubts on priority claim(s) or which is cited to establish the publication date of another citation or other special reason (as specified)

"O" document referring to an oral disclosure, use, exhibition or other means

"P" document published prior to the international filing date but later than the priority date claimed

"T" later document published after the international filing date or priority date and not in conflict with the application but cited to understand the principle or theory underlying the invention

"X" document of particular relevance; the claimed invention cannot be considered novel or cannot be considered to involve an inventive step when the document is taken alone

"Y" document of particular relevance; the claimed invention cannot be considered to involve an inventive step when the document is combined with one or more other such documents, such combination being obvious to a person skilled in the art

"&" document member of the same patent family

Date of the actual completion of the international search	Date of mailing of the international search report
25 August 1998	28 AUG 1998
Name and mailing address of the ISA/AU AUSTRALIAN PATENT OFFICE PO BOX 200 WODEN ACT 2606 AUSTRALIA Facsimile No.: (02) 6285 3929	Authorized officer **KURT TOBLER** Telephone No.: (02) 6283 2469

Form PCT/ISA/210 (second sheet) (July 1992) copbko

INTERNATIONAL SEARCH REPORT
Information on patent family members

International Application No.
PCT/AU 98/00500

This Annex lists the known "A" publication level patent family members relating to the patent documents cited in the above-mentioned international search report. The Australian Patent Office is in no way liable for these particulars which are merely given for the purpose of information.

Patent Document Cited in Search Report		Patent Family Member					
US	4619240	CA	1226183	EP	108582		
US	4517928	AU	17878/83	BR	8304334	CA	1213484
		IN	161555	NL	8203169	ZA	8305922
						EP	102119

END OF ANNEX

Form PCT/ISA/210 (extra sheet) (July 1992) copbko

UNITED STATES
PATENT AND TRADEMARK OFFICE

P.O. Box 1450
Alexandria, VA 22313 - 1450
www.uspto.gov

ELECTRONIC ACKNOWLEDGEMENT RECEIPT

APPLICATION #	RECEIPT DATE / TIME	ATTORNEY DOCKET #
16/789,722	**06/02/2021 09:56:47 AM ET**	**CET1090.075**

Title of Invention

DUAL FUEL SELECTOR SWITCH

Application Information

APPLICATION TYPE	Utility - Nonprovisional Application under 35 USC 111(a)	PATENT #	-
CONFIRMATION #	9989	FILED BY	Robyn Templin
PATENT CENTER #	60205927	FILING DATE	02/13/2020
CUSTOMER #	26629	FIRST NAMED INVENTOR	Mark J. Sarder
CORRESPONDENCE ADDRESS	-	AUTHORIZED BY	Andrew Stark

Documents

TOTAL DOCUMENTS: 7

DOCUMENT	PAGES	DESCRIPTION	SIZE (KB)
2021.06.02 Supp IDS.pdf	5	Information Disclosure Statement (IDS) Form (SB08)	983 KB
FPD1-EP1826377A2.pdf	7	Foreign Reference	3583 KB
FPD2-FR2510660A1.pdf	9	Foreign Reference	959 KB
FPD3-JPH0466743A.pdf	5	Foreign Reference	704 KB
FPD4-WO1999001659A1.pdf	31	Foreign Reference	1262 KB
FPD5-WO2007048633A1.pdf	45	Foreign Reference	404 KB
FPD6-FR2220679A1.pdf	8	Foreign Reference	931 KB

Digest

DOCUMENT	MESSAGE DIGEST(SHA-512)
2021.06.02 Supp IDS.pdf	91D6B8F147B5F51CA102763A0E2D531773F4F179F701F221B3D4A6C5FABB3A46DBB4BAB90C640B8D2AA6104F006F4057B920ECD28A6FA7B7CC1149D7B406A0EB
FPD1-EP1826377A2.pdf	5519381BE2F1669C49C52F6A3CE1C2AE9B98CCE1B2B1E876551AA609DC03A3CE43A83C43D84723A8A2E3E083CDC6BF98128612A6F8ED6D2C1EEB04F5B2D0A7C5
FPD2-FR2510660A1.pdf	03FEC57227ECDA0C648512D8BF9FCC432B6CD55D6DF2E27CF80DEFB471CD6F60E911D2B30A6BBB99CDE1F29AE34F593CB374C61DA89AB1377DF6FFF300494476
FPD3-JPH0466743A.pdf	C6E209FA97CF27D3D32C54AE2DB66E095D80B7D91772B8D6F8390DDD77A5FB9F90DC7BB8BB85C93B009011F08D0EC516677D12E2873170C615AC4B61C35B23F1
FPD4-WO1999001659A1.pdf	DF420B5442995B60703A46ED0E5A2786B45B74A458008DEF0031FA4637C31BF5CB2D9BF225A961C81DE6EC3D5AF0113914E986E2257860ED5B882C472BE4291B
FPD5-WO2007048633A1.pdf	354BA9FBE6516DEDC0B41922D3EBE31F7459E1E4D1637EAEA7CBFEAEFF0BADF96EFD87B0641C58D57011F7782A90FE5296539526BC9E7B2CBB32A2C0F40F008F
FPD6-FR2220679A1.pdf	F2D99D4432847551D0266D910364CCDC86AB1FCA0DCCDCAC27D96B072432CA2E1BCDB0139E1A6B24056A64E5453F71647108CDEF6B2F32EDCD4055C3A58AF469

This Acknowledgement Receipt evidences receipt on the noted date by the USPTO of the indicated documents, characterized by the applicant, and including page counts, where applicable. It serves as evidence of receipt similar to a Post Card, as described in MPEP 503.

New Applications Under 35 U.S.C. 111

If a new application is being filed and the application includes the necessary components for filing date (see 37 CFR 1.53(b)-(d) and MPEP 506), a Filing Receipt (37 CFR 1.54) will be issued in due course and the date shown on this Acknowledgement Receipt will establish the filing date of the application

National Stage of an International Application under 35 U.S.C. 371

If a timely submission to enter the national stage of an international application is compliant with the conditions of 35 U.S.C. 371 and other applicable requirements a Form PCT/DO/EO/903 indicating acceptance of the application as a national stage submission under 35 U.S.C. 371 will be issued in addition to the Filing Receipt, in due course.

New International Application Filed with the USPTO as a Receiving Office

If a new international application is being filed and the international application includes the necessary components for an international filing date (see PCT Article 11 and MPEP 1810), a Notification of the International Application Number and of the International Filing Date (Form PCT/RO/105) will be issued in due course, subject to prescriptions concerning national security, and the date shown on this Acknowledgement Receipt will establish the international filing date of the application.

Espacenet

Bibliographic data: FR2510660 (A1) — 1983-02-04

Two-fuel reservoir system for concrete mixer trucks - uses a solenoid valve actuated by contacts on gear selector and parking brake to provide fuel source changeover

Inventor(s): DERREZ MATHIAS; LOPEZ MICHEL ± (MATHIAS DERREZ ET MICHEL LOPEZ)

Applicant(s): STETTER SA [FR] ± (STETTER SA)

Classification: **- international:** ***F02D19/06;*** (IPC1-7): B60K15/02; F02D19/06
- cooperative: **F02D19/0618 (EP)**; **F02D19/0676 (EP)**; **F02D19/0684 (EP)**; Y02T10/30 (EP)

Application number: FR19810014723 19810729

Priority number(s): FR19810014723 19810729

Abstract of FR2510660 (A1)

The fuel supply system uses two fuel tanks, each containing different fuel (1,2) and has a controller with a solenoid valve (6) which couples one of the two tanks (1,2) to the engine. The solenoid valve is operated by a relay energised through two series connected electric contacts (16,17). The two contacts are coupled to the gearbox and parking brake, so when the gear lever is placed in neutral and the parking brake engaged the fuel changeover is automatically initiated. Indicator lights (14,15) on the dashboard are supplied by auxiliary contacts (16,17) on the solenoid valve to indicate which fuel reservoir is in use.

RÉPUBLIQUE FRANÇAISE

INSTITUT NATIONAL
DE LA PROPRIÉTÉ INDUSTRIELLE

PARIS

(11) N° de publication : **2 510 660**
(A n'utiliser que pour les commandes de reproduction).

A1

DEMANDE DE BREVET D'INVENTION

(21) **N° 81 14723**

(54) **Système d'alimentation en carburant à deux réservoirs, pour véhicule spécial à moteur unique.**

(51) Classification internationale (Int. Cl. [3]). F 02 D 19/06; B 60 K 15/02.

(22) Date de dépôt ..... 29 juillet 1981.

(33) (32) (31) Priorité revendiquée :

(41) Date de la mise à la disposition du public de la demande ..... B.O.P.I. — « Listes » n° 5 du 4-2-1983.

(71) Déposant : STETTER SA, société anonyme. — FR.

(72) Invention de : Mathias Derrez et Michel Lopez.

(73) Titulaire : *Idem* (71)

(74) Mandataire : Cabinet Pierre Loyer,
18, rue de Mogador, 75009 Paris.

D Vente des fascicules à l'IMPRIMERIE NATIONALE, 27, rue de la Convention — 75732 PARIS *CEDEX 15*

Système d'alimentation en carburant à deux réservoirs, pour véhicule spécial à moteur unique.

L'invention concerne un système d'alimentation en carburant, à deux réservoirs, pour véhicule spécial à moteur unique, destiné à permettre une fonction transport avec un type de carburant et une fonction service à l'arrêt du véhicule avec un autre type de carburant.

L'invention est notamment destinée à équiper les bétonnières mobiles.

Il est connu d'utiliser, pour un même moteur, deux types de carburant au moyen de deux réservoirs et d'une commande d'inversion disposée dans le circuit d'alimentation.

De plus, on connaît des véhicules ou engins qui sont destinés à accomplir une fonction transport ou déplacement et une fonction service lorsqu'ils sont arrêtés, cette fonction étant assurée par le moteur du véhicule. C'est par exemple le cas d'une bétonnière portée par un véhicule et dont le tambour est entraîné par le moteur du véhicule.

Dans ce cas, le véhicule est une partie du temps en déplacement et une autre partie du temps sur un chantier. En déplacement, le moteur sert à la traction du véhicule et éventuellement en même temps à la rotation du tambour. Sur le chantier le véhicule est en stationnement, avec son frein de parcage actionné et sa boîte de vitesse au point mort tandis que le moteur ne sert plus alors qu'à la rotation du tambour.

Avec un double fonctionnement de ce type, il peut être avantageux d'alimenter le moteur avec des carburants différents respectivement pour la fonction transport et pour la fonction service seule. L'avantage est par exemple simplement économique, en utilisant un carburant plus lourd et moins cher pour le service seul et au contraire plus performant pour le transport, comme par exemple respectivement du fioul et du gazole.

C'est pourquoi l'invention propose un système d'alimentation en carburant, à deux réservoirs, pour véhicule spécial à moteur unique, muni de moyens de commande pour alimenter le moteur à partir de l'un ou de l'autre desdits réservoirs et qui est remarquable en ce que les moyens de commande comportent une électro-vanne qui permet de positionner le circuit d'alimentation sur l'un ou l'autre des réservoirs et qui est actionné par un relai, lui-même commandé par les fermetures à la fois de deux

contacteurs électriques en série, lesdites fermetures étant obtenues respectivement par la mise au point mort de la boîte de vitesse du véhicule et par l'actionnement du frein de parcage de telle sorte que le moteur soit alimenté par l'un des réservoirs et un type de carburant en fonctionnement normal de transport et par l'autre réservoir et un autre type de carburant pour un fonctionnement de service seul lorsque le véhicule est à l'arrêt avec sa boîte de vitesse au point mort et son frein de parcage actionné.

Pour des raisons de sécurité il est avantageux selon l'invention que l'électro-vanne soit en position d'alimentation sur le réservoir destiné au fonctionnement transport lorsque ladite électro-vanne est au repos, c'est-à-dire non actionnée par le relais.

De préférence, dans ce cas deux témoins lumineux sont aménagés pour signaler le réservoir en fonction, ceux-ci étant électriquement alimentés par l'intermédiaire du relais qui ferme le circuit électrique du témoin destiné au réservoir de transport et ouvre le circuit électrique de l'autre témoin lorsque ledit relais est au repos, c'est-à-dire non commandé par les fermtures des contacteurs et au contraire ferme le circuit électrique du témoin destiné au réservoir de service et ouvre le circuit électrique de l'autre témoin lorsque ledit relais est excité par les fermetures en série des deux contacteurs.

L'invention sera mieux comprise à la lecture de la description qui va suivre et qui se réfère à la figure unique annexée représentant schématiquement un mode de réalisation selon l'invention pour moteur diesel.

Cette figure montre deux réservoirs 1 et 2 contenant par exemple respectivement du fioul et du gazole. De ces réservoirs partent des circuits d'alimentation munis chacun d'un préfiltre 3, 4 et pour le circuit gazole d'un dispositif anti-retour 5.

Les circuits des deux réservoirs passent par une électro-vanne 6 qui, au repos est en position d'alimentation gazole.

Après l'électro-vanne, le circuit unique parvient à la pompe d'alimentation 7 en passant par un bac de visualisation 8, visible de l'extérieur.

Après la pompe 7 le circuit aboutit aux pompes d'injection

9 après avoir traversé un filtre 10.

Comme le montre le dessin, le retour 11 des injecteurs se déverse dans le réservoir 1 de fioul et plus généralement dans le réservoir contenant le carburant le plus lourd et ceci quelque soit le réservoir sélectionné tandis que le retour 12 des pompes est recyclé en amont de la pompe d'alimentation 7.

L'électro-vanne 6 est actionnée par un relais 13 qui, au repos c'est-à-dire non excité, coupe le circuit électrique d'alimentation de l'électro-vanne qui reste alors en position d'alimentation/gazole. Dans cette position le relais ferme en outre le circuit électrique d'un témoin lumineux 14 (par exemple de couleur verte) tandis qu'il ouvre au contraire le circuit électrique d'un autre témoin lumineux 15 (de couleur rouge par exemple).

Lorsque le relais 13 est excité comme il sera expliqué ci-après, celui-ci ferme le circuit électrique de l'électro-vanne 6 qui bascule dans sa position alimentation fioul (réservoir 1), ouvre le circuit électrique du témoin 14 qui s'éteint et ferme le circuit électrique du témoin 15 qui s'allume.

L'excitation du relais 13, comme le montre le dessin, est obtenue par la fermeture de son circuit d'alimentation électrique au moyen de deux contacteurs en série 16 et 17 qui sont combinés avec respectivement la boîte de vitesse 18 et le frein de parcage 19 du véhicule.

Les contacteurs 16 et 17 sont tels qu'ils sont ouverts lorsque respectivement la boîte de vitesse 18 est enclenchée sur une vitesse et le frein de parcage 19 n'est pas actionné et au contraire fermés lorsque respectivement la boîte de vitesse est au point mort et le frein de parcage est actionné.

En outre l'ouverture et la fermeture du contacteur 17 entraînent respectivement l'ouverture et la fermeture du circuit électrique d'un autre témoin 20 classique de frein de parcage, de même couleur que le témoin 14.

Le fonctionnement est simple à comprendre.

En déplacement, le frein 19 n'est pas actionné et la boîte de vitesse enclenchée de telle sorte que le relais 13 n'est pas excité (les contacteurs 16 et 17 étant ouverts).

Dans ces conditions l'électro-vanne est en position

gazole, le témoin 14 est allumé et les témoins 15 et 20 éteints (conditions choisies pour le dessin). Dans ce cas, même la mise au point mort de la boîte ne change pas le type de carburant puisque le contacteur 17 reste ouvert.

Lorsque le frein 19 est actionné et que la boîte de vitesse 18 est au point mort, le relais 13 est excité de telle sorte que l'électro-vanne 6 est en position fioul tandis que le témoin 14 est éteint et les témoins 15 et 20 allumés par mise sous tension.

Cette disposition présente donc une grande sécurité et un automatisme complèt puisque les positions gazole et fioul sont automatiquement obtenues par la mise en fonction elles-mêmes, respectivement déplacement ou transport et service, le véhicule ne pouvant pas rouler sur chantier ou sur route avec du fioul (dans cet exemple). En outre en cas de défaillance électrique, les circuits restent ou passent en alimentation gazole.

Enfin, comme il a déjà été dit, l'invention est notamment destinée, mais non exclusivement, aux bétonnières portées.

REVENDICATIONS

1. Système d'alimentation en carburant, à deux réservoirs (1,2), pour véhicule spécial à moteur unique, muni de moyens de commande pour alimenter le moteur à partir de l'un ou de l'autre desdits réservoirs, système caractérisé en ce que les moyens de commande comportent une électro-vanne (6) qui permet de positionner le circuit d'alimentation sur l'un ou l'autre des réservoirs (1,2) et qui est actionnée par un relais (13) lui-même commandé par les fermetures à la fois de deux contacteurs électriques en série (16,17), lesdites fermetures étant obtenues respectivement par la mise au point mort de la boîte de vitesse (18) du véhicule et par l'actionnement du frein de parcage (19) de telle sorte que le moteur soit alimenté par l'un des réservoirs (2) et un type de carburant en fonctionnement normal de transport et par l'autre réservoir (1) et un autre type de carburant pour un fonctionnement de service seul lorsque le véhicule est à l'arrêt avec sa boîte de vitesse au point mort et son frein de parcage actionné.

2. Système selon la revendication 1, caractérisé en ce que l'électro-vanne (6) est en position d'alimentation sur le réservoir (2) destiné au fonctionnement transport lorsque ladite électro-vanne est au repos, c'est-à-dire non actionnée par le relais (13).

3. Système selon la revendication 2, caractérisé en ce que deux témoins lumineux (14,15) sont aménagés pour signaler le réservoir en fonction, ceux-ci étant électriquement alimentés par l'intermédiaire du relais (13) qui ferme le circuit électrique du témoin (14) destiné au réservoir (2) de transport et ouvre le circuit électrique de l'autre témoin (15) lorsque ledit relais est au repos, c'est-à-dire non commandé par les fermetures des contacteurs (16,17) et au contraire ferme le circuit électrique du témoin (15) destiné au réservoir (1) de service et ouvre le circuit électrique de l'autre témoin (14) lorsque ledit relais est excité par les fermetures en série des deux contacteurs (16,17).

4. Système selon l'une des revendications 1 à 3, pour moteur diesel, caractérisé en ce que le réservoir (2) destiné à la fonction transport contient du gazole et l'autre réservoir (1) du fioul.

5. Système selon l'une des revendications 1 à 4, caractérisé en ce que le réservoir (2) de transport est muni d'un dispositif anti-retour (5), que les circuits des deux réservoirs sont munis chacun d'un préfiltre (3,4) disposé en amont de l'électro-vanne (6) et qu'un bac de visualisation (8), visible de l'extérieur est prévu dans le circuit aval de l'électro-vanne (6).

6. Système selon l'une des revendications 1 à 5 caractérisé en ce que le véhicule est une bétonnière mobile et que le moteur unique assure d'une part le déplacement du véhicule et éventuellement en même temps, la rotation du tambour lorsque ledit moteur est alimenté par le réservoir (2) de transport et d'autre part seulement la rotation du tambour lorsqu'il est alimenté par le réservoir (1) de service, c'est-à-dire lorsque ledit véhicule est en position fixe, sur chantier par exemple.

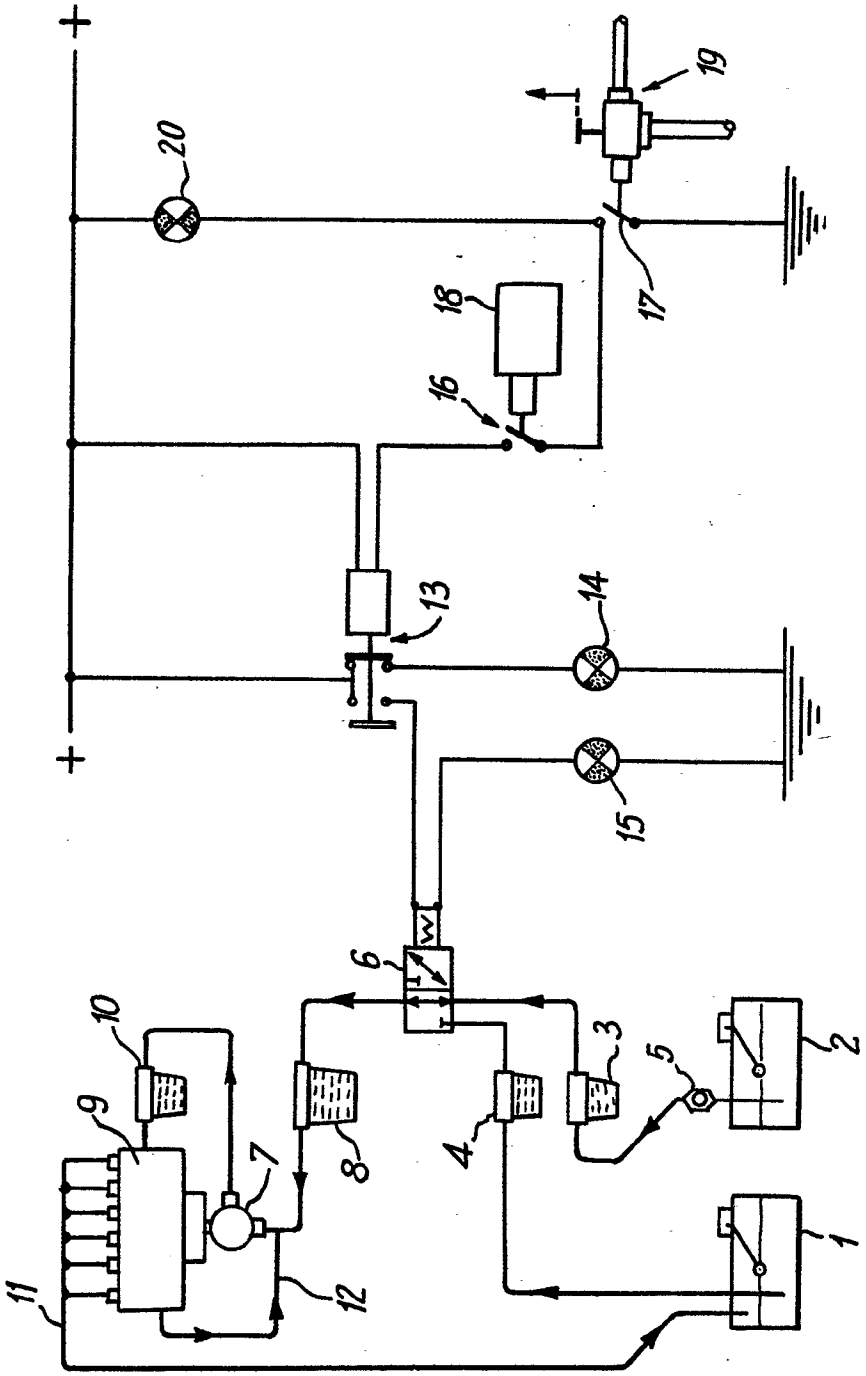
+
+
1
2
3
4
5
6
7
8
9
10
11
12
13
14
15
16
17
18
19
20

UNITED STATES
PATENT AND TRADEMARK OFFICE

P.O. Box 1450
Alexandria, VA 22313 - 1450
www.uspto.gov

ELECTRONIC PAYMENT RECEIPT

APPLICATION #	RECEIPT DATE / TIME	ATTORNEY DOCKET #
16/789,722	06/02/2021 09:56:47 AM ET	CET1090.075

Title of Invention

DUAL FUEL SELECTOR SWITCH

Application Information

APPLICATION TYPE	Utility - Nonprovisional Application under 35 USC 111(a)	PATENT #	-
CONFIRMATION #	9989	FILED BY	Robyn Templin
PATENT CENTER #	60205927	AUTHORIZED BY	Andrew Stark
CUSTOMER #	26629	FILING DATE	02/13/2020
CORRESPONDENCE ADDRESS	-	FIRST NAMED INVENTOR	Mark J. Sarder

Payment Information

PAYMENT METHOD	PAYMENT TRANSACTION ID	PAYMENT AUTHORIZED BY
CARD / 4529	E202162058080153	Robyn Templin

FEE CODE	DESCRIPTION	ITEM PRICE($)	QUANTITY	ITEM TOTAL($)
2806	SUBMISSION OF AN INFORMATION DISCLOSURE STATEMENT	130.00	1	130.00
			TOTAL AMOUNT:	$130.00

This Acknowledgement Receipt evidences receipt on the noted date by the USPTO of the indicated documents, characterized by the applicant, and including page counts, where applicable. It serves as evidence of receipt similar to a Post Card, as described in MPEP 503.

New Applications Under 35 U.S.C. 111

If a new application is being filed and the application includes the necessary components for filing date (see 37 CFR 1.53(b)-(d) and MPEP 506), a Filing Receipt (37 CFR 1.54) will be issued in due course and the date shown on this Acknowledgement Receipt will establish the filing date of the application

National Stage of an International Application under 35 U.S.C. 371

If a timely submission to enter the national stage of an international application is compliant with the conditions of 35 U.S.C. 371 and other applicable requirements a Form PCT/DO/EO/903 indicating acceptance of the application as a national stage submission under 35 U.S.C. 371 will be issued in addition to the Filing Receipt, in due course.

New International Application Filed with the USPTO as a Receiving Office

If a new international application is being filed and the international application includes the necessary components for an international filing date (see PCT Article 11 and MPEP 1810), a Notification of the International Application Number and of the International Filing Date (Form PCT/RO/105) will be issued in due course, subject to prescriptions concerning national security, and the date shown on this Acknowledgement Receipt will establish the international filing date of the application.

(19) Europäisches Patentamt
European Patent Office
Office européen des brevets

(11) EP 1 826 377 A2

(12) EUROPEAN PATENT APPLICATION

(43) Date of publication:
29.08.2007 Bulletin 2007/35

(51) Int Cl.:
F02D 19/06 (2006.01) F02B 61/02 (2006.01)

(21) Application number: 06112103.4

(22) Date of filing: 31.03.2006

(84) Designated Contracting States:
AT BE BG CH CY CZ DE DK EE ES FI FR GB GR HU IE IS IT LI LT LU LV MC NL PL PT RO SE SI SK TR
Designated Extension States:
AL BA HR MK YU

(30) Priority: 23.02.2006 CN 200610024100

(71) Applicant: ROTAREX STAR
Schanghai
201300 (CN)

(72) Inventors:
- THOME, Frank
201300, SHANGHAI/CN (LU)
- CAO, Guangbin
201300, SHANGHAI/CN (CN)
- YU, Wenjia
201300, SHANGHAI/CN (CN)

(74) Representative: Ghioni, Carlo Raoul Maria et al
Bugnion S.p.A.,
Viale Lancetti 17
20158 Milano (IT)

(54) Fuel change-over system and change-over method for motorcycle or motor-assisted bicycle

(57) The invention discloses a fuel change-over system for a motorcycle or motor assisted bicycle. The system comprises a solenoid-actuated gasoline valve (70) for controlling opening/closing of a gasoline supply passage, a solenoid-actuated LPG valve (40) for controlling opening/closing of a LPG supply passage, a gasoline pump (80), a change-over switch (140), a control device (100), and a indication device (150). During a change-over from gasoline to LPG, the control device (100) makes the pump (80) starting and operating so that any rest gasoline in a carburetor (60) of the vehicle can be drawn by the pump (80) back to a tank (90) of the vehicle. Moreover, the invention provides a fuel change-over method for conducting a smooth fuel change-over between gasoline and LPG in a dual-fuel motorcycle or motor assisted bicycle during its running or stop time. This will be contributive to popularize motorcycles and motor assisted bicycles.

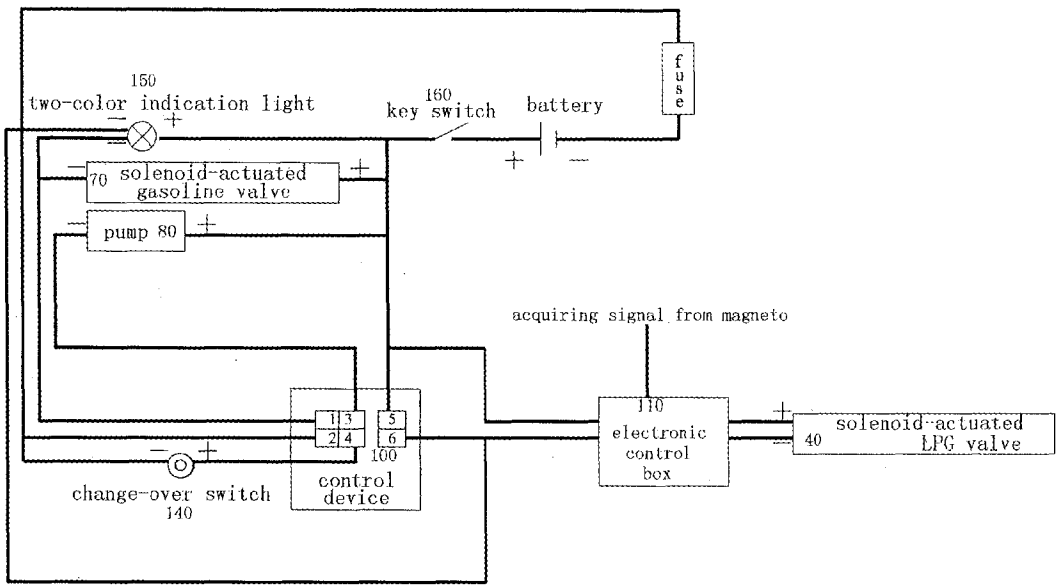

FIG. 2

EP 1 826 377 A2

Champion - EX2109, Page 260 of 403
Generac Power Systems, Inc. et al v. Champion Power Equip., Inc.
IPR2025-01438

Description

Technical field

[0001] The present invention relates generally to a fuel change-over system and a corresponding change-over method thereto for a motorcycle or motor-assisted bicycle (called jointly by motorcycle(s) hereafter).

Background of the invention

[0002] Nowadays, a motorcycle which uses clean energy sources such as LPG is becoming a new popular traffic vehicle, for the emissions of the gasoline-burning motorcycles have polluted the atmosphere heavily. Therefore, a LPG-burning motorcycle is and will be in a great demand in the world market. The gas refilling of LPG motorcycles, however, is a big problem in some countries, which needs the public administrations concerned to invest finance to build sufficient LPG refilling stations and service facilities associated with them. This is a big obstacle for popularizing LPG motorcycles in some countries. If a dual-fuel motorcycle can be developed that uses LPG as a primary fuel and gasoline as a secondary one, the dual-fuel motorcycle of this type will be adopted in large amounts in the cities where there are less LPG refilling stations, it will make its users unnecessary to worry about the trouble in gas refilling, harmful emissions will be reduced, and the environmental atmosphere will be less polluted accordingly. At present, there have existed sophisticated single-fuel motorcycles, that is, gasoline burning ones and LPG burning ones, in wide use. A gasoline-burning motorcycle uses a carburetor to mix fuel with air and to form a combustible mixture, while a LPG-burning motorcycle uses a mixer to mix LPG with air. It is a difficult problem to combine a carburetor and a mixer together in a volume-limited motorcycle body, and it is another difficult problem to make a smooth change-over between the two fuels under a precondition not to influence user's riding. So far, in this field, there has not been a technology capable of solving the problems. Though some technologies for change-over between two fuels have been successfully used in the fields of cars and buses, the difference between a four-wheel vehicle and a two-wheel one is rather great, and most cars and buses are electronically fuel-injected, therefore, there is also a great difference in fuel change-over between a car and a motorcycle.

Summary of the invention

[0003] The object of the invention is to provide a fuel change-over system for conducting smooth and save changing-over between gasoline and LPG in a motorcycle.

[0004] The another object of the invention is to provide a fuel change-over system for conducting smooth and safe changing-over between gasoline and LPG during user's riding or in stop time.

[0005] The still another object of the invention is to provide a fuel change-over method for conducting smooth and safe changing-over between gasoline and LPG in a motorcycle.

[0006] In one aspect of the invention, the invention provides a fuel change-over system for conducting fuel change-over of a dual-fuel motorcycle. The system is used to conduct changing-over between gasoline supply and LPG supply and comprises: a solenoid-actuated gasoline valve for controlling opening/closing of a gasoline supply passage, it is connected at its one end to a gasoline tank and at its the other end to a carburetor; a solenoid-actuated LPG valve for controlling opening/closing of a LPG supply passage, it is connected at its one end to a LPG source and at its the other end to a mixer, and a outlet of the mixer is connected to a inlet of the carburetor; a change-over switch for conducting changing-over operation. The change-over system further comprises: a pump whose inlet is connected to the carburetor for drawing any rest gasoline in the carburetor back to the gasoline tank; a control device which is electrically connected to the pump, the change-over switch, the solenoid-actuated gasoline valve, and the solenoid-actuated LPG valve, respectively. In changing-over from gasoline to LPG, the control device makes the pump starting so as to draw any rest gasoline in the carburetor back to the gasoline tank.

[0007] In another aspect of the invention, the solenoid-actuated LPG valve is attached on a pressure reducing valve which is connected at its one end to the LPG source and at its the other end to the mixer.

[0008] In still another aspect of the invention, the mixer is connected at its outlet to an inlet of the carburetor and is provided with an air cleaner at its inlet.

[0009] In yet another aspect of the invention, the fuel change-over system is provided with an electronic control box for acquiring a signal from the magneto of a motorcycle. The electronic control box is connected with the solenoid-actuated LPG valve. When the magneto is stopped, the electronic control box transmits a control signal to make the solenoid-actuated LPG valve closed and thereby to shut off LPG supply passage.

[0010] In a further aspect of the invention, the control device further includes a condition memory device which is able to remember if gasoline or LPG is used before electrical power supply is turned off until the motorcycle and its magneto is power on and started again. The change-over switch is a two-position button switch and can be triggered by a voltage signal. The change-over switch is not triggered when the power supply of a motorcycle is turned off.

[0011] In a further aspect of the invention, the fuel change-over system further includes a fuel attribute indicator for indicating if gasoline or LPG is used at that right time. The fuel attribute indicator is electrically connected with the control device.

[0012] In a further aspect of the invention, the control

Champion - EX2109, Page 261 of 403
Generac Power Systems, Inc. et al v. Champion Power Equip., Inc.
IPR2025-01438

device can control the gasoline pump so that the operation time length of the pump is proportional to the gasoline chamber volume of the carburetor.

[0013] In a further aspect of the invention, during a changing-over from LPG to gasoline, the control device controls the solenoid-actuated LPG valve so as to make it closed at a time delay; and during a changing-over from gasoline to LPG, the control device controls the solenoid-actuated gasoline valve so as to make it open at a time delay.

[0014] In a further aspect of the invention, the control device is provided with a change-over disabling device which is used to disable any following changing-over operation in a predetermined period after the last changing-over is triggered.

[0015] Furthermore, the invention provides a fuel change-over method for conducting fuel change-over in a dual-fuel motorcycle. The method comprises: during a changing-over from LPG to gasoline, as soon as the change-over switch of the change-over system is operated, the control device of the change-over system makes the solenoid-actuated gasoline valve open immediately so as to make gasoline passage through, and at the same time, the solenoid-actuated LPG valve is closed at a time delay; during a changing-over from gasoline to LPG, as soon as the change-over switch of the change-over system is operated, the control device of the change-over system makes the solenoid-actuated gasoline valve closed immediately so as to shut off gasoline passage, and at the same time, the gasoline pump in the fuel change-over system is started, and the solenoid-actuated LPG valve is opened at a time delay.

[0016] With the fuel change-over system and the fuel change-over method according to the invention, a rider can conduct a smooth fuel changing-over between gasoline and LPG during whose running or in stop time. This will be contributive to popularize motorcycles.

Brief description of drawings

[0017]

Fig. 1 is a schematic diagram of a general layout of the fuel change-over system according to the invention; and

Fig. 2 is a wiring principle diagram of the control device of the fuel change-over system according to the invention.

Detailed description of the invention

[0018] The invention is described below in detail in reference to the accompanying drawings.

[0019] Fig.1 is a schematic diagram of a general layout of the fuel change-over system for a motorcycle according to the invention, which is used for conducting changing-over between gasoline and LPG. The fuel change-over system comprises a solenoid-actuated gasoline valve 70 for opening/closing a gasoline supply passage and a solenoid-actuated LPG valve 40 for opening/closing a LPG supply passage. The solenoid-actuated gasoline valve 70 is connected at its one end to a gasoline tank 90 and at its the other end to a carburetor 60. The solenoid-actuated LPG valve 40 is attached on a pressure-reducing valve 120 which is used for adjusting LPG pressure into a mixer 50. The pressure-reducing valve 120 is connected at its one end to a LPG container 20 and at its other end to the mixer 50 which is used for mixing LPG and air. An outlet of the mixer 50 is connected to an inlet of the carburetor 60, and thereby it is possible to use a common fuel throttle wire, and an air cleaner (not shown) is provided at an inlet of the mixer 50. As shown in Fig. 1, a combination valve 30 is provided in the LPG container 20 and is connected to a LPG refilling valve 10 which is used for filling LPG into LPG container 20.

[0020] The fuel change-over system comprises a change-over switch for triggering a changing-over operation. Preferably, the change-over switch is a two-position button switch and can be triggered by a voltage signal. Thus, the change-over switch will not be triggered by a mal-operation in the case that the main power supply is turned off.

[0021] The fuel change-over system of the invention further comprises a gasoline pump 80 which is connected at its inlet to a discharge port at the bottom of the carburetor 60 and at its outlet to a gasoline tank 90 so that it can draw any rest gasoline in the carburetor 60 back to the gasoline tank 90.

[0022] Furthermore, the fuel change-over system includes a control device 100. As shown in Fig. 2, the control device 100 has six control legs, wherein leg 1 is connected to the solenoid-actuated gasoline valve 70 and can be connected in parallel with a double-color indication light 150 for indicating the condition of the solenoid-actuated gasoline valve 70, e.g. red light's lighting up indicates that the solenoid-actuated gasoline valve 70 is open and gasoline is used; leg 6 is connected to solenoid-actuated LPG valve 40 and also connected with the double-color indication light 150 for indicating the condition of the solenoid-actuated LPG valve 40, e.g. green light's lighting up indicates that the solenoid-actuated LPG valve 40 is open and LPG is used; leg 2 is connected to the negative of the battery; leg 3 to gasoline pump 80; leg 4 to the change-over switch 140; and leg 5 to the key switch 160 of a motorcycle.

[0023] The control device 100 carries out its control functions as follows: in a changing over from LPG to gasoline, as soon as the change-over switch 140 is pressed down, the control device 100 makes solenoid-actuated gasoline valve 70 open immediately so that the gasoline supply passage becomes through; meanwhile the solenoid-actuated LPG valve 40 on the pressure-reducing valve 120 is closed at a time delay and the LPG supply passage is closed at a time delay accordingly. The double-color indication light 150 gives out a red light

Champion - EX2109, Page 262 of 403
Generac Power Systems, Inc. et al v. Champion Power Equip., Inc.
IPR2025-01438

in the time a motorcycle runs on gasoline. In a changing over from gasoline to LPG, as soon as the change-over switch 140 is pressed again, the control device 100 makes solenoid-actuated gasoline valve 70 closed immediately so that the gasoline supply passage shut off, and the pump 80 is put into operation for a suitable predetermined period to draw any rest gasoline in the carburetor 60 back to the gasoline tank 90 and then is stopped; meanwhile the solenoid-actuated LPG valve 40 on the pressure-reducing valve 120 is opened at a time delay and the LPG supply passage becomes through accordingly. The double-color indication light 150 gives out a green light in the time a motorcycle runs on gasoline.

[0024] In the control process described above, the length of the time delay at which the solenoid-actuated LPG valve 40 is closed or opened is dependent on the displacement volume of a specific motorcycle and on the internal configuration of the carburetor 60; the length of the period for which the gasoline pump 80 works is dependent on the size of the carburetor gasoline chamber. Generally, the larger the gasoline chamber is the longer the period for which the gasoline pump 80 shall work after the solenoid-actuated gasoline valve 70 is closed.

[0025] Preferably, the control device 100 further includes a condition memory device which is able to remember the condition in which if gasoline or LPG is used before electrical power supply is turned off until power supply is turned on again, thereby, when the motorcycle is restarted, the control device 100 can hold the motorcycle to use the fuel that was used before its electrical power supply is turned off. In the case that the change-over switch 140 is a voltage triggered button-type switch, in combination with the condition memory device, a program malfunction or mal-operation which may cause the two fuel burned simultaneously can be avoided.

[0026] Furthermore, the control system 100 includes a change-over disabling device which is used to disable any following changing-over operation in a predetermined period (e.g. 10 seconds) after the change-over switch 140 is pressed down last-time, this is to ensure that two successive fuel change-overs can not be conducted in a stipulated time length so as to avoid the program out of order and the two fuels burned simultaneously.

[0027] Moreover, in order to ensure motorcycle's stability and safety, the control device 100 of the fuel change-over system of the invention is provided with an electronic control box 110 for acquiring a signal from a magneto of the motorcycle. The electronic control box 110 is connected with the solenoid-actuated LPG valve 40. As soon as the motorcycle stops traveling and its magneto stops as well, the electronic control box 110 transmits a control signal to make the solenoid-actuated LPG valve 40 closed so as to shut off LPG passage.

[0028] In addition, as shown in Fig. 1, an additional solenoid-actuated LPG valve 130 is provided in the container which is LPG source. The valve, together and at the same time with the solenoid-actuated LPG valve 40 attached on the pressure-reducing valve 120, is controlled by the control device 100. This is advantageous to raise the safety of the whole system.

[0029] While the preferred embodiment of the invention has been described and illustrated, it is obvious that those who are skillful in this technical field can make many changes and modifications without departing from the spirit and principle of the invention. For example, the fuel change-over system according to the invention can be modified to suit motorcycles of different displacements and carburetors of different sizes by adjusting the time delay of the solenoid-actuated LPG valve 40 in the system. Therefore, the scope of the invention is only defined by the claims.

Claims

1. A fuel change-over system which is used on a dual-fuel motorcycle or motor assisted bicycle for conducting its fuel change-over, more particularly for conducting change-over between gasoline supply and LPG supply, is **characterized in that** the fuel change-over system comprises:

   a solenoid-actuated gasoline valve for controlling opening/closing of a gasoline supply passage, the solenoid-actuated gasoline valve being connected at its one end to a gasoline tank and at its the other end to a carburetor;
   a solenoid-actuated LPG valve for controlling opening/closing of a LPG supply passage, the solenoid-actuated LPG valve being connected at its one end to a LPG source and at its the other end to a mixer;
   a change-over switch for conducting changing-over operation;
   a gasoline pump which is connected at its inlet to the carburetor and at its outlet to the gasoline tank so that the pump can draw the gasoline in the carburetor back to the tank;
   a control device which is electrically connected to the pump, the change-over switch, the solenoid-actuated gasoline valve, and the solenoid-actuated LPG valve, respectively, the control device is configured to start the pump to draw the gasoline in the carburetor back to the tank as soon as the change-over switch is triggered when a changing-over from gasoline to LPG is conducted.

2. The fuel change-over system according to claim 1, wherein the solenoid-actuated LPG valve is attached on a pressure-reducing valve, and the pressure-reducing valve is connected at its one end to the LPG source and at its the other end to the mixer.

3. The fuel change-over system according to claim 1,

Champion - EX2109, Page 263 of 403
Generac Power Systems, Inc. et al v. Champion Power Equip., Inc.
IPR2025-01438

wherein the mixer is connected at its outlet to an inlet of the carburetor and is provided with an air cleaner at its inlet.

4. The fuel change-over system according to claim 1, wherein the fuel change-over system is provided with an electronic control box for acquiring a signal from a magneto of a motorcycle and motor assisted bicycle, the electronic control box is connected with the solenoid-actuated LPG valve, the electronic control box transmits a control signal to make the solenoid-actuated LPG valve closed and thereby to shut off LPG passage as soon as the magneto stops.

5. The fuel change-over system according to claim 1, wherein further comprising a condition memory device which is able to remember the condition in which if gasoline or LPG is used before the electrical power supply of the control device is turned off until the power supply is turned on again, thereby, when the motorcycle or motor assisted bicycle is restarted, the control device can hold it to use the fuel that was used before its electrical power supply is turned off, the change-over switch is a voltage triggered button-type switch, which is not triggered when the electrical power supply of the motorcycle or motor assisted bicycle is turned off.

6. The fuel change-over system according to claim 1, wherein the fuel change-over system comprises a fuel attribute indicator for indicating if gasoline or LPG is used by the vehicle at that right time, the indicator is connected with the control device.

7. The fuel change-over system according to claim 1, wherein the control device can control the gasoline pump so that the length of its operation time is proportional to the gasoline chamber volume of the carburetor.

8. The fuel change-over system according to claim 1, wherein during a changing-over from LPG to gasoline, the control device controls the solenoid-actuated LPG valve so as to make it closed at a time delay; and during a changing-over from gasoline to LPG, the control device controls the solenoid-actuated gasoline valve so as to make it open at a time delay.

9. The fuel change-over system according to claim 1, wherein the fuel change-over system includes a change-over disabling device which is used to disable any following changing-over operation in a predetermined period after the last-time change-over is carried out.

10. A fuel change-over method for conducting fuel change-over of a dual-fuel motorcycle or motor assisted bicycle via a fuel change-over system, comprising:

during a changing-over from LPG to gasoline, as soon as a change-over switch of the change-over system is operated, a control device of the change-over system makes a solenoid-actuated gasoline valve thereof open immediately so as to make gasoline supply passage through, and at the same time, a solenoid-actuated LPG valve thereof is closed at a time delay; during a changing-over from gasoline to LPG, as soon as the change-over switch of the change-over system is operated, the control device of the change-over system makes the solenoid-actuated gasoline valve closed immediately so as to shut off the gasoline supply passage, and at the same time, the gasoline pump in the fuel change-over system is started to work and the solenoid-actuated LPG valve is opened at a time delay.

Champion - EX2109, Page 264 of 403
Generac Power Systems, Inc. et al v. Champion Power Equip., Inc.
IPR2025-01438

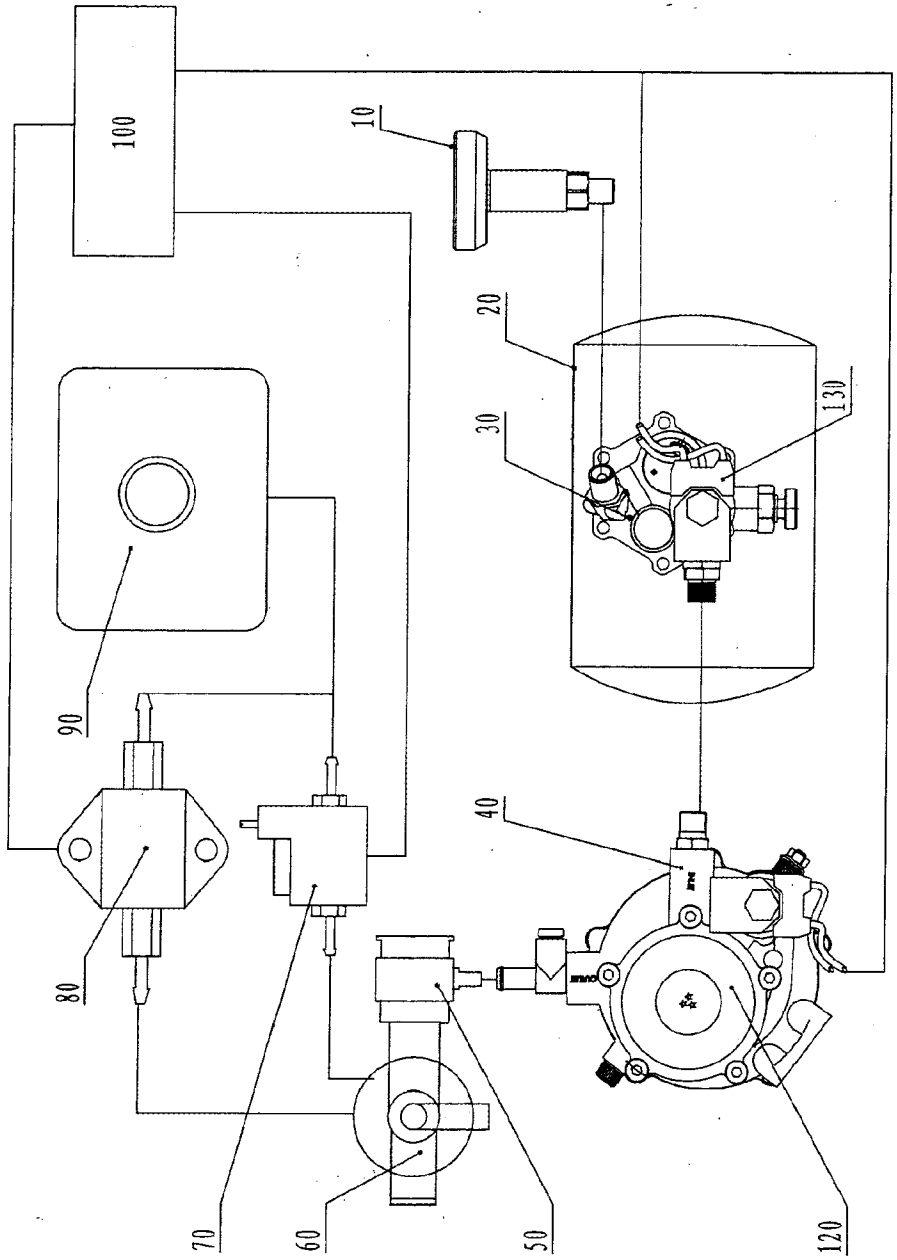

FIG. 1

Champion - EX2109, Page 265 of 403
Generac Power Systems, Inc. et al v. Champion Power Equip., Inc.
IPR2025-01438

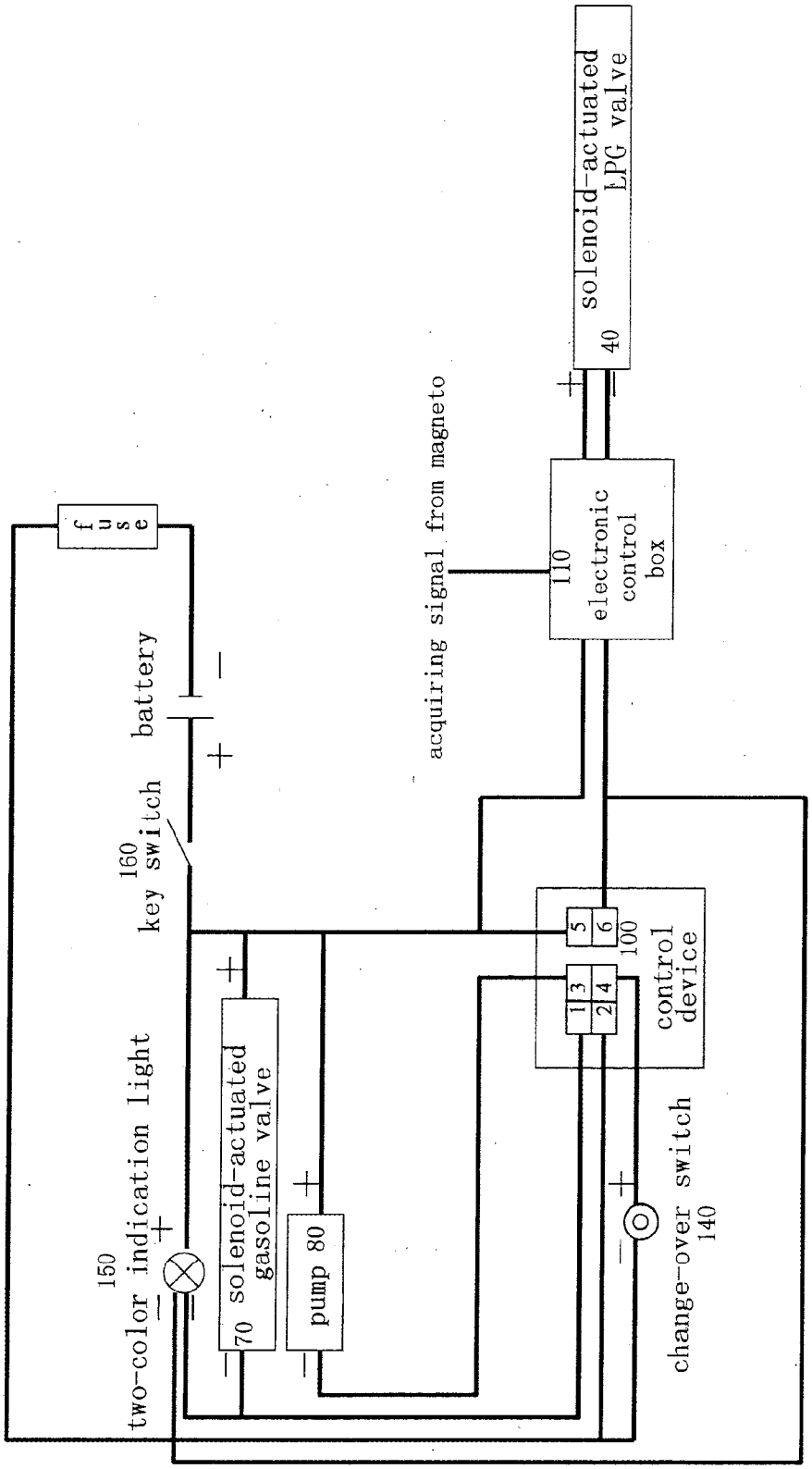

FIG. 2

Champion - EX2109, Page 266 of 403
Generac Power Systems, Inc. et al v. Champion Power Equip., Inc.
IPR2025-01438

Espacenet

Bibliographic data: FR2220679 (A1) — 1974-10-04

Fuel control system for I.C. engine - supplies light or heavy fuel, according to use of engine, to injection pump

Inventor(s):

Applicant(s): SERVEQUIP [FR] ± (SERVEQUIP,FR, ; SERVEQUIP)

Classification:
- **international:** ***F02D19/06;*** (IPC1-7): F02D19/06
- **cooperative:** **F02D19/0618 (EP)**; **F02D19/0676 (EP)**; Y02T10/30 (EP)

Application number: FR19730008061 19730307

Priority number(s): FR19730008061 19730307

Also published as: FR2220679 (B1)

Abstract of FR2220679 (A1)

The engine fuel pump is supplied from either of two fuel tanks through an electromagnetic three-way valve. Excess fuel from the pump is returned to either tank through another three way valve. The valve motors are energised by a circuit containing a switch controlled by a manual lever. The flow valve is operated immediately by the controls but the return valve is operated through an adjustable delay timer. This ensures that fuel already in the pipes is returned to the correct tank.

(19) RÉPUBLIQUE FRANÇAISE

INSTITUT NATIONAL
DE LA PROPRIÉTÉ INDUSTRIELLE

PARIS

(11) N° de publication : **2.220.679**
(A n'utiliser que pour le classement et les commandes de reproduction).

(21) *N° d'enregistrement national* : **73.08061**
(A utiliser pour les paiements d'annuités, les demandes de copies officielles et toutes autres correspondances avec l'I.N.P.I.)

DEMANDE DE BREVET D'INVENTION

1re PUBLICATION

(22) Date de dépôt ..... 7 mars 1973, à 14 h 14 mn.

(41) Date de la mise à la disposition du public de la demande..... B.O.P.I. — «Listes» n. 40 du 4-10-1974.

(51) Classification internationale (Int. Cl.) F 02 d 19/06.

(71) Déposant : Société anonyme dite : SERVEQUIP, résidant en France.

(73) Titulaire : *Idem* (71)

(74) Mandataire : Cabinet Faber.

(54) **Installation de contrôle de l'alimentation d'un moteur sélectivement en gas-oil et en fuel-oil.**

(72) Invention de :

(33) (32) (31) Priorité conventionnelle :

Vente des fascicules à l'IMPRIMERIE NATIONALE, 27, rue de la Convention - 75732 PARIS CEDEX 15

L'invention concerne le contrôle de l'alimentation d'un moteur à combustion interne sélectivement en gas-oil et en fuel-oil, notamment les moteurs de pompes à béton montées sur véhicules automobiles.

Lorsqu'une pompe à béton est installée d'une manière immobile sur un chantier, il est autorisé de l'actionner au moyen d'un moteur alimenté en fuel-oil, c'est-à-dire, un carburant détaxé et par conséquent bon marché. Mais lorsque cette même pompe est montée sur un véhicule automobile, il n'est pas permis que le moteur d'entrainement de ce véhicule soit alimenté également en fuel-oil, on l'alimente donc en général en gas-oil, c'est-à-dire en carburant non détaxé, et par conséquent onéreux.

En moyenne, on a constaté que les temps d'utilisation d'une pompe à béton se partagent approximativement en 3/5 pour le travail de pompage du béton à poste fixe et 2/5 pour les déplacements de la pompe.

Au lieu d'avoir un moteur alimenté à partir d'un réservoir de fuel-oil pour l'actionnement de la pompe et un autre moteur alimenté à partir d'un réservoir de gas-oil pour l'entrainement du véhicule, il serait intéressant d'avoir un moteur unique que l'on puisse accoupler sélectivement à la pompe ou à la transmission d'entrainement des roues du véhicule pourvu que l'on soit assuré que l'alimentation du moteur se fasse dans chacune des deux utilisations, à partir du réservoir de carburant correspondant et qu'au début du fonctionnement au gas-oil le reliquat de fuel-oil demeuré dans les diverses tuyauteries et accessoires, tels que filtres et injecteurs, retourne bien dans le réservoir de fuel-oil.

A cet effet, on va donc utiliser une installation de contrôle de l'alimentation d'une pompe à injection d'un moteur unique sélectivement à partir d'un réservoir de gas-oil ou d'un réservoir de fuel-oil, selon que le moteur est accouplé à un premier ou à un second appareil d'utilisation, notamment d'un moteur de pompe à béton montée sur un véhicule automobile mû par le même moteur, accouplé sélectivement à la pompe ou à une transmission d'entrainement des roues motrices du véhicule par un embrayage sélectif à commande manuelle et, suivant l'invention, l'entrée de la pompe d'alimentation du moteur est reliée

aux deux réservoirs de carburant par l'intermédiaire d'une première électro-valve d'amenée à trois voies et la sortie de ladite pompe est reliée semblablement aux deux réservoirs de carburant par l'intermédiaire d'une seconde électro-valve de retour à trois voies, les deux électro-valves étant placées sous le contrôle de l'organe de commande manuelle de l'embrayage sélectif du moteur, la première directement et la seconde par l'intermédiaire d'un relais temporisé, de façon telle que le retour de fuel-oil se fasse vers le réservoir de fuel-oil, non seulement lorsque l'alimentation de la pompe du moteur est assurée en fuel-oil, mais aussi pendant la durée de la temporisation dudit relais au début de l'alimentation de la pompe du moteur en gas-oil.

Grâce à une telle installation, le fait même d'accoupler le moteur à la pompe à béton ou bien à la transmission d'entrainement des roues du véhicule assure automatiquement l'alimentation de la pompe à injection du moteur à partir du réservoir de carburant approprié et, de plus, le reliquat de fuel-oil demeuré dans les conduites et accessoires ne risque pas de retourner dans le réservoir de gas-oil pendant le début du fonctionnement du moteur au gas-oil.

L'invention sera mieux comprise à la lecture de la description qui va suivre et à l'examen du dessin annexé dont la figure unique est un schéma d'une installation de contrôle de l'alimentation d'un moteur de pompe à béton suivant l'invention.

Sur le schéma, on a indiqué en 1 un moteur qui peut être accouplé, sélectivement, à une pompe à béton et aux roues d'un véhicule sur lequel est montée ladite pompe, au moyen d'un embrayage sélectif placé sous le contrôle d'un levier à commande manuelle 2 que l'on peut placer, sélectivement, dans l'une ou l'autre de deux positions correspondantes désignées respectivement par 2C et 2R sur le schéma, à savoir une position "chantier" pour l'entrainement de la pompe et une position "route" pour les déplacements.

Lorsque le moteur 1 est accouplé à la pompe à béton, sa pompe à injection 4 est alimentée à partir d'un réservoir 5 de fuel-oil par l'intermédiaire d'une électro-valve d'amenée à trois voies 6, dans sa position de repos, le levier 2 de sélection étant dans la position 2C. Lorsque le moteur 1 est accou-

plé aux roues du véhicule par la mise enposition du levier de sélection 2 dans la position 2R, la pompe à injection 4 du moteur est alimentée à partir d'un autre réservoir 7 de gas-oil, par l'intermédiaire de la même électro-valve 6en position de travail.

L'électro-valve est donc reliée d'une part, à l'entrée de la pompe à injection 4 par une conduite 11 et, d'autre part, aux deux réservoirs de carburant 5 et 7 par deux conduites 13 et 14, respectivement.

La sortie de la pompe à injection 4 est reliée par une conduite 16 à une électro-valve de retour 17 qui est reliée, à son tour, aussi aux deux réservoirs de carburant 5 et 7 par deux conduites 18 et 19 respectivement.

Dans sa position de repos l'électro-valve de retour 17 met la sortie de la pompe à injection 4 en communication avec le réservoir de fuel-oil 5, tandis que lorsqu'elle est excitée elle la met en communication avec le réservoir de gas-oil 7.

Les deux électro-valves 6 et 17 sont alimentées à partir d'une source de courant appropriée, telle qu'une batterie d'accumulateuns 21, par l'intermédiaire d'un interrupteur 22 fermé lorsque le levier de sélection 2 est dans la position 2R de déplacement du véhicule, de préférence sous le contrôle du contact 24 de marche du moteur 1, muni d'un témoin lumineux 25. Toutefois, l'alimentation de l'électro-valve d'amenée 6 se fait directement à partir de l'interrupteur 22, tandis que celle de l'électro-valve de retour 17 se fait par l'intermédiaire d'un relais 26 temporisé par exemple pour une durée de deux minutes. On peut avantageusement utiliser à cet effet, un relais à temporisation réglable par exemple de 0 à 180 secondes.

Le fonctionnement de l'installation est le suivant :

pour faire fonctionner la pompe à béton, on place le levier sélecteur 2 dans la position "chantier" 2C. Le contact 24 étant fermé, le moteur 1 en fonctionnement entraine par conséquent la pompe à béton et sa pompe à injection 4 est alimentée en fuel-oil bon marché à partir du réservoir 5 par la conduite 13, l'électro-valve d'amenée 6 au repos et la conduite 11. Le retour de carburant de la pompe à injection 4 se fait par la conduite 16, l'électro-valve de retour 17en position de repos et la conduite 18.

Si l'on a besoin de déplacer la pompe à béton, on doit

amener le levier sélecteur 2 dans la position "route" 2R de manière à assurer l'accouplement du moteur 1 aux roues du véhicule. Dans cette position, l'électro-valve d'amenée 6 est immédiatement mise en position de travail et la pompe à injection 4 du moteur est alimentée en gas-oil cher par la conduite 14, l'électro-valve d'amenée 6 en position de travail, et la conduite 11. Dès le début du fonctionnement du moteur dans cette condition, le relais temporisé 26, bien qu'alimenté aussi, laisse encore, pendant une durée d'environ deux minutes l'électro-valve de retour 17 en position de repos, de sorte que le reliquat du carburant précédemment utilisé, c'est-à-dire du fuel-oil bon marché qui se trouvait encore dans les conduites et accessoires retourne par la conduite 16, l'électro-valve 17 de retour au repos et la conduite 18, au réservoir 5 de fuel-oil. A l'expiration du temps de temporisation, on est certain que tout le circuit de retour est purgé de fuel-oil bon marché et, à ce moment, le relais 26 assure la mise de l'électro-valve de retour 17 en position de travail pour permettre le retour de gas-oil de la pompe à injection, par la conduite 19, au réservoir 7 de gas-oil cher.

Bien entendu, l'invention n'est pas limitée au mode de réalisation décrit et représenté ; on peut y apporter des modifications, suivant les applications envisagées, sans sortir, pour cela, du cadre de l'invention.

R E V E N D I C A T I O N

Installation de contrôle de l'alimentation d'une pompe à injection de moteur sélectivement à partir d'un réservoir de gas-oil ou d'un réservoir de fuel-oil, selon que le moteur est accouplé à un premier ou à un second appareil d'utilisation, notamment d'un moteur de pompe à béton monté sur un véhicule automobile mû par le même moteur, accouplé sélectivement à la pompe ou à une transmission d'entrainement des roues motrices du véhicule par un embrayage sélectif à commande manuelle, ladite installation étant caractérisée en ce que l'entrée de la pompe d'alimentation du moteur est reliée aux deux réservoirs de carburant par l'intermédiaire d'une électro-valve d'amenée à trois voies et la sortie de ladite pompe est reliée semblablement aux deux réservoirs de carburant par l'intermédiaire d'une électro-valve de retour à trois voies également, les deux électro-valves étant placées sous le contrôle de l'organe de commande manuelle de l'embrayage sélectif du moteur, la première directement et la seconde par l'intermédiaire d'un relais temporisé, de façon telle que le retour de fuel-oil se fasse vers le réservoir de fuel-oil, non suelement lorsque l'alimentation de la pompe du moteur est assurée en fuel-oil, mais aussi pendant la durée de la temporisation dudit relais au début de l'alimentation de la pompe du moteur en gas-oil.

Pl.unique 2220679

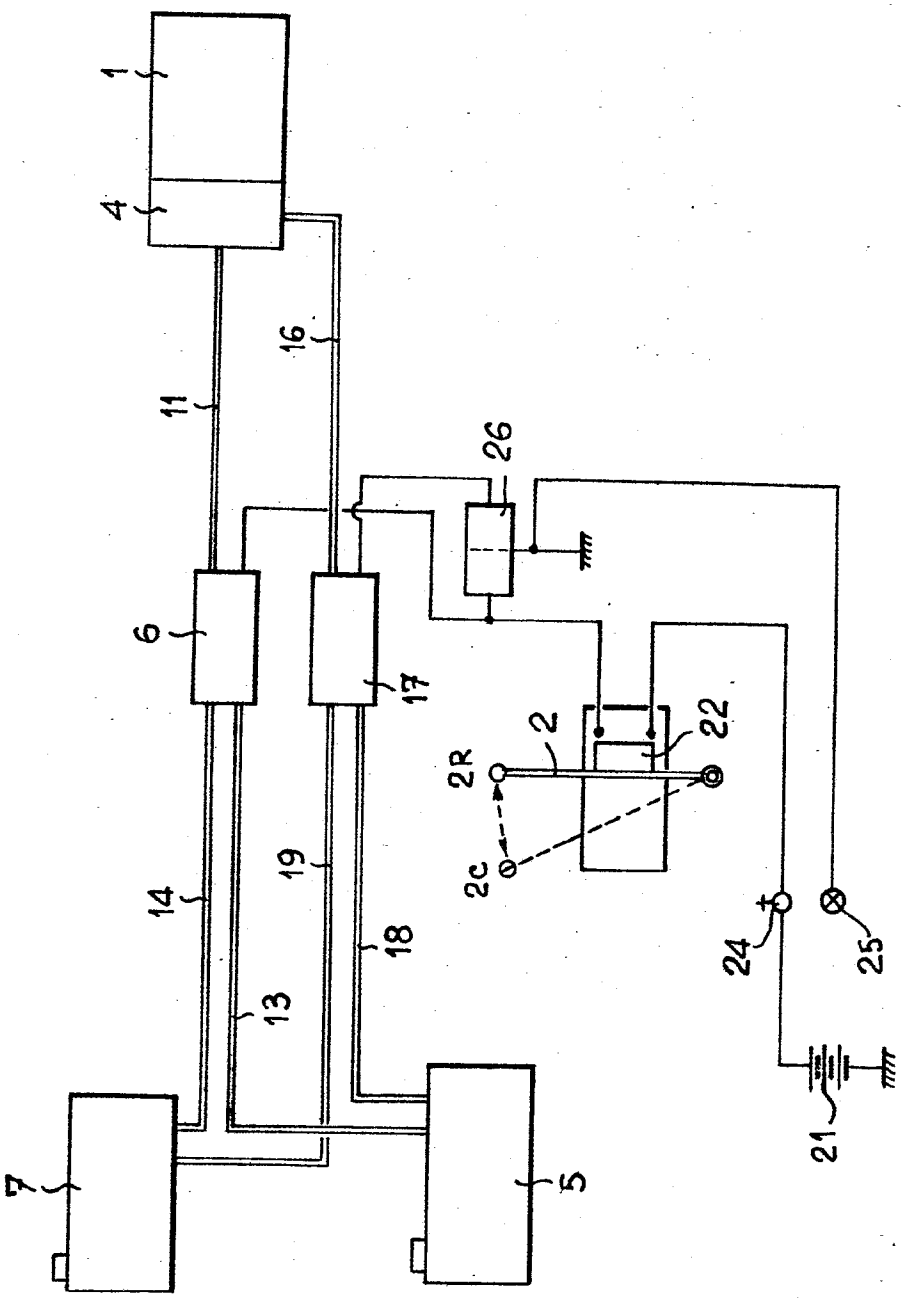

UNITED STATES PATENT AND TRADEMARK OFFICE

UNITED STATES DEPARTMENT OF COMMERCE
United States Patent and Trademark Office
Address: COMMISSIONER FOR PATENTS
P.O. Box 1450
Alexandria, Virginia 22313-1450
www.uspto.gov

APPLICATION NO.	FILING DATE	FIRST NAMED INVENTOR	ATTORNEY DOCKET NO.	CONFIRMATION NO.
16/789,722	02/13/2020	Mark J. Sarder	CET1090.075	9989

26629 7590 03/11/2021
ZIOLKOWSKI PATENT SOLUTIONS GROUP, SC (ZPS)
136 S WISCONSIN ST
PORT WASHINGTON, WI 53074

EXAMINER
HASAN, SYED O

ART UNIT	PAPER NUMBER
3747	

NOTIFICATION DATE	DELIVERY MODE
03/11/2021	ELECTRONIC

Please find below and/or attached an Office communication concerning this application or proceeding.

The time period for reply, if any, is set in the attached communication.

Notice of the Office communication was sent electronically on above-indicated "Notification Date" to the following e-mail address(es):

info@zpspatents.com
jmf@zpspatents.com

Office Action Summary	Application No. 16/789,722	Applicant(s) Sarder et al.	
	Examiner SYED O HASAN	Art Unit 3747	AIA (FITF) Status Yes

-- The MAILING DATE of this communication appears on the cover sheet with the correspondence address --

Period for Reply

A SHORTENED STATUTORY PERIOD FOR REPLY IS SET TO EXPIRE 3 MONTHS FROM THE MAILING DATE OF THIS COMMUNICATION.

- Extensions of time may be available under the provisions of 37 CFR 1.136(a). In no event, however, may a reply be timely filed after SIX (6) MONTHS from the mailing date of this communication.
- If NO period for reply is specified above, the maximum statutory period will apply and will expire SIX (6) MONTHS from the mailing date of this communication.
- Failure to reply within the set or extended period for reply will, by statute, cause the application to become ABANDONED (35 U.S.C. § 133). Any reply received by the Office later than three months after the mailing date of this communication, even if timely filed, may reduce any earned patent term adjustment. See 37 CFR 1.704(b).

Status

1)☑ Responsive to communication(s) filed on 2/13/2020.

☐ A declaration(s)/affidavit(s) under **37 CFR 1.130(b)** was/were filed on _____.

2a)☐ This action is **FINAL.** 2b) ☑ This action is non-final.

3)☐ An election was made by the applicant in response to a restriction requirement set forth during the interview on _____; the restriction requirement and election have been incorporated into this action.

4)☐ Since this application is in condition for allowance except for formal matters, prosecution as to the merits is closed in accordance with the practice under *Ex parte Quayle*, 1935 C.D. 11, 453 O.G. 213.

Disposition of Claims*

5) ☑ Claim(s) 1-17 is/are pending in the application.

5a) Of the above claim(s) _____ is/are withdrawn from consideration.

6) ☐ Claim(s) _____ is/are allowed.

7) ☑ Claim(s) 1-3,5-6 and 9-17 is/are rejected.

8) ☑ Claim(s) 4 and 7-8 is/are objected to.

9) ☐ Claim(s) _____ are subject to restriction and/or election requirement

* If any claims have been determined allowable, you may be eligible to benefit from the **Patent Prosecution Highway** program at a participating intellectual property office for the corresponding application. For more information, please see http://www.uspto.gov/patents/init_events/pph/index.jsp or send an inquiry to **PPHfeedback@uspto.gov.**

Application Papers

10)☐ The specification is objected to by the Examiner.

11)☑ The drawing(s) filed on 2/13/2020 is/are: a)☑ accepted or b)☐ objected to by the Examiner.

Applicant may not request that any objection to the drawing(s) be held in abeyance. See 37 CFR 1.85(a).

Replacement drawing sheet(s) including the correction is required if the drawing(s) is objected to. See 37 CFR 1.121(d).

Priority under 35 U.S.C. § 119

12)☐ Acknowledgment is made of a claim for foreign priority under 35 U.S.C. § 119(a)-(d) or (f).

Certified copies:

a)☐ All b)☐ Some** c)☐ None of the:

1.☐ Certified copies of the priority documents have been received.

2.☐ Certified copies of the priority documents have been received in Application No. _____.

3.☐ Copies of the certified copies of the priority documents have been received in this National Stage application from the International Bureau (PCT Rule 17.2(a)).

** See the attached detailed Office action for a list of the certified copies not received.

Attachment(s)

1) ☑ Notice of References Cited (PTO-892)

2) ☑ Information Disclosure Statement(s) (PTO/SB/08a and/or PTO/SB/08b) Paper No(s)/Mail Date _____.

3) ☐ Interview Summary (PTO-413) Paper No(s)/Mail Date _____.

4) ☐ Other: _____.

DETAILED ACTION

Notice of Pre-AIA or AIA Status

1. The present application, filed on or after March 16, 2013, is being examined under the first inventor to file provisions of the AIA.

Double Patenting

2. Claims 1-17 of this application is patentably indistinct from claims 1-2, 8, 17, 18, and 19 of Application No. 15/015205. Pursuant to 37 CFR 1.78(f), when two or more applications filed by the same applicant or assignee contain patentably indistinct claims, elimination of such claims from all but one application may be required in the absence of good and sufficient reason for their retention during pendency in more than one application. Applicant is required to either cancel the patentably indistinct claims from all but one application or maintain a clear line of demarcation between the applications. See MPEP § 822.

3. The nonstatutory double patenting rejection is based on a judicially created doctrine grounded in public policy (a policy reflected in the statute) so as to prevent the unjustified or improper timewise extension of the "right to exclude" granted by a patent and to prevent possible harassment by multiple assignees. A nonstatutory double patenting rejection is appropriate where the conflicting claims are not identical, but at least one examined application claim is not patentably distinct from the reference claim(s) because the examined application claim is either anticipated by, or would have been obvious over, the reference claim(s). See, e.g., *In re Berg*, 140 F.3d 1428, 46 USPQ2d 1226 (Fed. Cir. 1998); *In re Goodman*, 11 F.3d 1046, 29 USPQ2d 2010 (Fed. Cir. 1993); *In re Longi*, 759 F.2d 887, 225 USPQ 645 (Fed. Cir. 1985); *In re Van Ornum*,

686 F.2d 937, 214 USPQ 761 (CCPA 1982); *In re Vogel*, 422 F.2d 438, 164 USPQ 619 (CCPA 1970); *In re Thorington*, 418 F.2d 528, 163 USPQ 644 (CCPA 1969).

A timely filed terminal disclaimer in compliance with 37 CFR 1.321(c) or 1.321(d) may be used to overcome an actual or provisional rejection based on nonstatutory double patenting provided the reference application or patent either is shown to be commonly owned with the examined application, or claims an invention made as a result of activities undertaken within the scope of a joint research agreement. See MPEP § 717.02 for applications subject to examination under the first inventor to file provisions of the AIA as explained in MPEP § 2159. See MPEP § 2146 *et seq.* for applications not subject to examination under the first inventor to file provisions of the AIA. A terminal disclaimer must be signed in compliance with 37 CFR 1.321(b).

The USPTO Internet website contains terminal disclaimer forms which may be used. Please visit www.uspto.gov/patent/patents-forms. The filing date of the application in which the form is filed determines what form (e.g., PTO/SB/25, PTO/SB/26, PTO/AIA/25, or PTO/AIA/26) should be used. A web-based eTerminal Disclaimer may be filled out completely online using web-screens. An eTerminal Disclaimer that meets all requirements is auto-processed and approved immediately upon submission. For more information about eTerminal Disclaimers, refer to www.uspto.gov/patents/process/file/efs/guidance/eTD-info-I.jsp.

4. Claims 1-17 are rejected on the ground of nonstatutory double patenting as being unpatentable over claims 1-2, 8, 17, 18, and 19 of U.S. Patent No. 10,598,101. Although the claims at issue are not identical, they are not patentably distinct from each other because the limitations are similar.

5. Claims 1-17 rejected on the ground of nonstatutory double patenting over claims 1-2, 8, 17, 18, and 19 of U.S. Patent No. 10,598,101 since the claims, if allowed, would improperly extend the "right to exclude" already granted in the patent.

The subject matter claimed in the instant application is fully disclosed in the patent and is covered by the patent since the patent and the application are claiming common subject matter.

Furthermore, there is no apparent reason why applicant was prevented from presenting claims corresponding to those of the instant application during prosecution of the application which matured into a patent. See *In re Schneller*, 397 F.2d 350, 158 USPQ 210 (CCPA 1968). See also MPEP § 804.

Claim Objections

6. Claim 5 is objected to because of the following informalities: Claims 5 depends on claim 2 when it should depend on claim 3 since the valves are first recited within claim 3 and not claim 2. Appropriate correction is required.

7. Claim 8 is objected to because of the following informalities: Claim 8 should depend on claim 7 since claim 8 mentions a second position when a first position is only mentioned before in claim 7. Appropriate correction is required.

Claim Rejections - 35 USC § 102

8. In the event the determination of the status of the application as subject to AIA 35 U.S.C. 102 and 103 (or as subject to pre-AIA 35 U.S.C. 102 and 103) is incorrect, any correction of the statutory basis for the rejection will not be considered a new ground of rejection if the prior art relied upon, and the rationale supporting the rejection, would be the same under either status.

9. The following is a quotation of the appropriate paragraphs of 35 U.S.C. 102 that form the basis for the rejections under this section made in this Office action:

> A person shall be entitled to a patent unless –
>
> (a)(1) the claimed invention was patented, described in a printed publication, or in public use, on sale, or otherwise available to the public before the effective filing date of the claimed invention.

10. Claim(s) 1-2 and 10-15 is/are rejected under 35 U.S.C. 102(a)(1) as being anticipated by Sugimoto (U.S. Publication 2007/0137591), hereinafter "Sugimoto".

Regarding claim 1, Sugimoto discloses a fuel selector for use with a dual fuel generator (1), the fuel selector comprising: a valve assembly (assembly for valve 12, paragraph 83) fluidly connected to each of a first fuel source (Fa, 61, paragraph 71) and a second fuel source (Fb, 71, paragraph 73), the valve assembly being operable to selectively control a first fuel flow and a second fuel flow from the first fuel source and the second fuel source (paragraph 83), respectively, to an engine (30) of the dual fuel generator; and a selector switch (12) positioned on the valve assembly to allow a user to manually select one of the first fuel flow and the second fuel flow (paragraph 83); wherein the valve assembly comprises: two fuel inputs (inputs from 61 and 71), with a first fuel input (input for 61) connected to the first fuel source (61) and a second fuel input (input for 71) connected to the second fuel source (71); and two fuel outputs (outputs for 61 and 71) for selectively supplying fuel to the engine from the first fuel source or the second fuel source. Examiner notes that the fuel sources inherently have inputs and outputs to allow the fuel to flow to the engine.

Regarding claim 2, Sugimoto discloses the fuel selector of claim 1 wherein the two fuel outputs selectively supply fuel to the engine from only one of the first fuel

source or the second fuel source, responsive to selection of the first fuel flow or the second fuel flow via the selector switch, and a corresponding operation of the valve assembly. Examiner notes that when the switch (12) is switched from the internal fuel (Fa) to the external fuel (Fb), the fuel cutoff valve or solenoid cuts off fuel from the first fuel source and vice versa when the switch goes from external fuel mode to internal fuel mode.

Regarding claim 10, Sugimoto discloses a fuel selector of a dual fuel generator comprising: a selector switch (12) having a first fuel mode (internal fuel mode) and a second fuel mode (external fuel mode, paragraph 82); a solenoid switch (74) having open and closed positions (paragraph 83); and a fuel solenoid (solenoid associated with 63) having open and closed positions (paragraphs 80, 81 and 86); wherein, when the selector switch is in the first fuel mode (internal fuel mode), the solenoid switch and the fuel solenoid are in the closed positions and, when the selector switch is in the second fuel mode (external fuel mode), the solenoid switch and the fuel solenoid are in the open positions. Examiner notes that when the switch 12 is switched from internal fuel (first mode) to external fuel (second mode) the fuel cutoff valve or solenoid cuts off the fuel from the first fuel source and vice versa when the switch goes from second mode to first mode. The solenoid switch and the fuel solenoid are not related to each other within the claim and so Sugimoto's switch 74 and solenoid 63 has the capability to read on the claim limitations.

Regarding claim 11, Sugimoto discloses the fuel selector of claim 10 wherein the selector switch (12) triggers the solenoid switch (74) when changed from the second

fuel mode to the first fuel mode, so as to cause the solenoid switch and the fuel solenoid to operate in the closed positions (paragraph 86).

Regarding claim 12, Sugimoto discloses The fuel selector of claim 10 further comprising: a valve assembly fluidly connected to each of a first fuel source and a second fuel source, the valve assembly being operable to selectively control a first fuel flow and a second fuel flow from the first fuel source and the second fuel source, respectively, to an engine of the dual fuel generator; and wherein positioning of the selector switch in the first fuel mode and the second fuel mode enables a selection of one of the first fuel flow and the second fuel flow. **Refer to the rejection of claim 1 for further details since the limitations are similar.**

Regarding claim 13, Sugimoto discloses the fuel selector of claim 12 wherein the valve assembly (assembly for 12) is positioned on or adjacent the selector switch (74, shown in figure 6).

Regarding claim 14, Sugimoto discloses the fuel selector of claim 12 wherein the valve assembly comprises: two fuel inputs, with a first fuel input connected to the first fuel source and a second fuel input connected to the second fuel source; and two fuel outputs for selectively supplying fuel to the engine from the first fuel source or the second fuel source. **Refer to the rejection of claim 1 for further details since the limitations are similar.**

Regarding claim 15, Sugimoto discloses the fuel selector of claim 14 wherein the two fuel outputs selectively supply fuel to the engine from only one of the first fuel source or the second fuel source, responsive to selection of the first fuel flow or the second fuel flow via the selector switch and a corresponding operation of the valve

assembly. **Refer to the rejection of claim 2 for further details since the limitations are similar.**

Claim Rejections - 35 USC § 103

11. In the event the determination of the status of the application as subject to AIA 35 U.S.C. 102 and 103 (or as subject to pre-AIA 35 U.S.C. 102 and 103) is incorrect, any correction of the statutory basis for the rejection will not be considered a new ground of rejection if the prior art relied upon, and the rationale supporting the rejection, would be the same under either status.

12. The following is a quotation of 35 U.S.C. 103 which forms the basis for all obviousness rejections set forth in this Office action:

> A patent for a claimed invention may not be obtained, notwithstanding that the claimed invention is not identically disclosed as set forth in section 102, if the differences between the claimed invention and the prior art are such that the claimed invention as a whole would have been obvious before the effective filing date of the claimed invention to a person having ordinary skill in the art to which the claimed invention pertains. Patentability shall not be negated by the manner in which the invention was made.

13. Claim 3, 5, 9, and 16-17 is/are rejected under 35 U.S.C. 103 as being unpatentable over Sugimoto in view of Poehlman (U.S. Patent 4,489,699), hereinafter "Poehlman".

Regarding claim 3, Sugimoto discloses the same invention substantially as claimed, but is silent to disclose a first fuel valve having open and close positions to selectively control fuel flow and a second fuel valve having open and closed positions to selectively control fuel flow. However, Poehlman teaches the use of a first solenoid fuel valve (45) with open and close positions and a second solenoid fuel valve (43) with open and closed positions (column 4, lines 21-30) for the purpose of preventing leakage and providing fast response times. Therefore, it would have been obvious to one of

ordinary skill in the art before the effective filing date of the invention to modify Sugimoto by incorporating solenoid valves to provide the different fuel flows of the different fuel sources as taught by Poehlman when and operator makes a fuel source selection through valve 12 of Sugimoto for the purpose of preventing leakage and providing fast response times. Examiner notes that Sugimoto allows for a user to selectively operate which fuel to use and with Poehlman in combination, allow for the fuel to be provided with a faster response time and without leakage. Poehlman is brought herein as a reference only to teach the different valves for each fuel source since Sugimoto is silent, and would not destroy the invention of Sugimoto.

Regarding claim 5, Sugimoto and Poehlman disclose the fuel selector of claim 2 wherein the selector switch (Sugimoto, 12) provides for manual actuation (Sugimoto allows for user to manually switch between different fuels) of the first fuel valve and the second fuel valve between the open and closed positions. Sugimoto in combination with Poelhman would allow for a manual actuation of the fuel valves since it is controlled by the operator switching the fuel selection.

Regarding claim 9, Sugimoto and Poehlman disclose the fuel selector of claim 1 wherein the first fuel source (Poehlman, natural gas, 27)) is a liquefied petroleum gas (LPG) fuel source and wherein the second fuel source is a gasoline source (Poehlman, 21, column 3, lines 25-36). Examiner notes that Sugimoto is silent to teach the specific gases within the internal tank and the external tanks and Poehlman teaches LPG and gasoline.

Regarding claim 16, Sugimoto and Poehlman disclose the fuel selector of claim 14 wherein the valve assembly comprises: a first fuel valve having open and closed

positions to selectively control the first fuel flow to the engine; and a second fuel valve having open and closed positions to selectively control the second fuel flow to the engine. **Refer to the rejection of claim 2 for further details since the limitations are similar.**

Regarding claim 17, Sugimoto and Poehlman disclose the fuel selector of claim 12 wherein the first fuel source is a liquefied petroleum gas (LPG) fuel source and wherein the second fuel source is a gasoline source. **Refer to the rejection of claim 9 for further details since the limitations are similar.**

14. Claim 6 is/are rejected under 35 U.S.C. 103 as being unpatentable over Sugimoto in view of Mott (U.S. Patent 3,696,333), hereinafter "Mott".

Regarding claim 6, Sugimoto discloses the same invention substantially as claimed except for a carburetor solenoid switch. However, Mott teaches the use of solenoid (24) controlled by a switch (25) for a carburetor (31) for the purpose of opening the automatic choke to allow for the carburetor to operate effectively when enough pressure is built up (column 2, lines 15-27). Therefore, it would have been obvious to one of ordinary skill in the art before the effective filing date of the invention to modify Sugimoto by incorporating a carburetor solenoid (24) and switch (25) to selectively operate Sugimoto's carburetor (37b) for the purpose of opening the automatic choke to allow for the carburetor to operate effectively when enough pressure is built up.

Allowable Subject Matter

15. Claims 4 and 7-8 are objected to as being dependent upon a rejected base claim, but would be allowable if rewritten in independent form including all of the limitations of the base claim and any intervening claims.

16. The following is a statement of reasons for the indication of allowable subject matter: There is no prior art that teaches all the limitations of claim 4, but more specifically, the first fuel valve and the second fuel valve are non-solenoid, mechanical valves.

There is no prior art that teaches all the limitations of claim 7, but more specifically, the selector switch automatically activating the carburetor switch when the selector switch is actuated to stop a second fuel flow to the engine. All depending claims are objected. It is assumed as mentioned in claim objection above that claim 8 depends on claim 7.

Conclusion

17. The prior art made of record and not relied upon is considered pertinent to applicant's disclosure. Refer to PTO-892.

18. Any inquiry concerning this communication or earlier communications from the examiner should be directed to SYED O HASAN whose telephone number is (571)272-0990. The examiner can normally be reached on Monday-Friday; 11AM-7PM.

Examiner interviews are available via telephone, in-person, and video conferencing using a USPTO supplied web-based collaboration tool. To schedule an interview, applicant is encouraged to use the USPTO Automated Interview Request (AIR) at http://www.uspto.gov/interviewpractice.

If attempts to reach the examiner by telephone are unsuccessful, the examiner's supervisor, Lindsay Low can be reached on (571) 272-1196. The fax phone number for the organization where this application or proceeding is assigned is 571-273-8300.

Information regarding the status of an application may be obtained from the Patent Application Information Retrieval (PAIR) system. Status information for published applications may be obtained from either Private PAIR or Public PAIR. Status information for unpublished applications is available through Private PAIR only. For more information about the PAIR system, see https://ppair-my.uspto.gov/pair/PrivatePair. Should you have questions on access to the Private PAIR system, contact the Electronic Business Center (EBC) at 866-217-9197 (toll-free). If you would like assistance from a USPTO Customer Service Representative or access to the automated information system, call 800-786-9199 (IN USA OR CANADA) or 571-272-1000.

/SYED O HASAN/
Primary Examiner, Art Unit 3747
3/8/2021

Notice of References Cited	Application/Control No. 16/789,722	Applicant(s)/Patent Under Reexamination Sarder et al.	
	Examiner SYED O HASAN	Art Unit 3747	Page 1 of 1

U.S. PATENT DOCUMENTS

*		Document Number Country Code-Number-Kind Code	Date MM-YYYY	Name	CPC Classification	US Classification
*	A	US-4489699-A	12-1984	Poehlman; Arthur G.	F02B69/04	123/525
*	B	US-20060169238-A1	08-2006	Mazuka; Naoto	F02B63/04	123/179.18
*	C	US-20040240141-A1	12-2004	Stolt, Peter E.	H01H47/18	361/160
*	D	US-20020125115-A1	09-2002	Burkholder, Robert F.	H01R13/465	200/51.11
*	E	US-20070137591-A1	06-2007	Sugimoto; Yasuhiro	F02D29/06	123/41.7
*	F	US-3696333-A	10-1972	Mott; Willard	F02N11/0803	290/38D
	G					
	H					
	I					
	J					
	K					
	L					
	M					

FOREIGN PATENT DOCUMENTS

*		Document Number Country Code-Number-Kind Code	Date MM-YYYY	Country	Name	CPC Classification
	N					
	O					
	P					
	Q					
	R					
	S					
	T					

NON-PATENT DOCUMENTS

*		Include as applicable: Author, Title Date, Publisher, Edition or Volume, Pertinent Pages)
	U	
	V	
	W	
	X	

*A copy of this reference is not being furnished with this Office action. (See MPEP § 707.05(a).)
Dates in MM-YYYY format are publication dates. Classifications may be US or foreign.

Index of Claims	Application/Control No.	Applicant(s)/Patent Under Reexamination
	16/789,722	Sarder et al.
	Examiner	**Art Unit**
	SYED O HASAN	3747

✓	Rejected	-	Cancelled	N	Non-Elected	A	Appeal
=	Allowed	÷	Restricted	I	Interference	O	Objected

CLAIMS

☐ Claims renumbered in the same order as presented by applicant ☐ CPA ☐ T.D. ☐ R.1.47

CLAIM		DATE								
Final	Original	03/08/2021								
	1	✓								
	2	✓								
	3	✓								
	4	O								
	5	✓								
	6	✓								
	7	O								
	8	O								
	9	✓								
	10	✓								
	11	✓								
	12	✓								
	13	✓								
	14	✓								
	15	✓								
	16	✓								
	17	✓								

Search Notes	Application/Control No.	Applicant(s)/Patent Under Reexamination
	16/789,722	Sarder et al.
	Examiner	**Art Unit**
	SYED O HASAN	3747

CPC - Searched*		
Symbol	**Date**	**Examiner**
F02D19/0676, 19/0613, 19/0647, 29/06, 19/0681, F02M21/0293, 21/0236, 13/08, F02B53/00, 63/00, H02K1/22	03/08/2021	/S.O.H/

CPC Combination Sets - Searched*		
Symbol	**Date**	**Examiner**

US Classification - Searched*			
Class	**Subclass**	**Date**	**Examiner**

* See search history printout included with this form or the SEARCH NOTES box below to determine the scope of the search.

Search Notes		
Search Notes	**Date**	**Examiner**
Searched in subclasses above with keywords.	03/08/2021	/S.O.H/
EAST search strategy attached. Inventor name searches performed.	03/08/2021	/S.O.H/

Interference Search			
US Class/CPC Symbol	**US Subclass/CPC Group**	**Date**	**Examiner**

	/SYED O HASAN/ Primary Examiner, Art Unit 3747

Champion - EX2109, Page 290 of 403
Generac Power Systems, Inc. et al v. Champion Power Equip., Inc.
IPR2025-01438

EAST Search History

EAST Search History (Prior Art)

Ref #	Hits	Search Query	DBs	Default Operator	Plurals	Time Stamp
L1	1	"20070137591"	USPAT	OR	OFF	2021/03/08 19:48
L2	2	"20070137591"	US-PGPUB; USPAT	OR	OFF	2021/03/08 19:48
L3	5	"10598101"	US-PGPUB; USPAT	OR	OFF	2021/03/08 20:36
L4	49	"4489699"	US-PGPUB; USPAT	OR	OFF	2021/03/08 21:16
L5	0	carburettor near3 solenoid near3 switch	US-PGPUB; USPAT	OR	OFF	2021/03/08 21:21
L6	0	carburettor near3 solenoid near3 switch	US-PGPUB; USPAT; USOCR; FPRS; EPO; JPO	OR	OFF	2021/03/08 21:22
L7	43	carbur$8 near3 solenoid near3 switch	US-PGPUB; USPAT; USOCR; FPRS; EPO; JPO	OR	OFF	2021/03/08 21:22
L8	38	engine and (carbur$8 near3 solenoid near3 switch)	US-PGPUB; USPAT; USOCR; FPRS; EPO; JPO	OR	OFF	2021/03/08 21:22
L9	0	engine and geneartor and (carbur$8 near3 solenoid near3 switch)	US-PGPUB; USPAT; USOCR; FPRS; EPO; JPO	OR	OFF	2021/03/08 21:22
L10	26	engine and generator and (carbur$8 near3 solenoid near3 switch)	US-PGPUB; USPAT; USOCR; FPRS; EPO; JPO	OR	OFF	2021/03/08 21:22
L11	19	("20070137591" | "2398437" | "3911956" | "4323046" | "4375795" | "4471805" | "4492207" | "4750514" | "4788960" | "5934320" | "6543395" | "6591817" | "7591257" | "7802562" | "7905469" | "8042569" | "8757139" | "8944027" | "9175601").PN.	US-PGPUB; USPAT	OR	OFF	2021/03/08 22:09

S1	11	((Mark) near2 (Sarder)).INV.	US-PGPUB; USPAT; USOCR	OR	OFF	2015/06/23 14:16
S2	2	((Leigh) near2 (Jenison)).INV.	US-PGPUB; USPAT; USOCR	OR	OFF	2015/06/23 14:17
S3	2	((Ian) near2 (Schmit)).INV.	US-PGPUB; USPAT; USOCR	OR	OFF	2015/06/23 14:18
S4	834	123/525.ccls.	US-PGPUB; USPAT; USOCR; FPRS; EPO; JPO; DERWENT	OR	OFF	2015/06/23 14:20
S5	3	123/525.ccls. and (dual near3 fuel near3 generator)	US-PGPUB; USPAT; USOCR; FPRS; EPO; JPO; DERWENT	OR	OFF	2015/06/23 14:20
S6	2	123/525.ccls. and (((multiple near3 fuel) or bi-fuel) near3 generator)	US-PGPUB; USPAT; USOCR; FPRS; EPO; JPO; DERWENT	OR	OFF	2015/06/23 14:21
S7	3	123/525.ccls. and (((multiple near3 fuel) or bi-fuel or (LPG near5 gasoline)) near10 generator)	US-PGPUB; USPAT; USOCR; FPRS; EPO; JPO; DERWENT	OR	OFF	2015/06/23 14:22
S8	236	(((multiple near3 fuel) or bi-fuel or (LPG near5 gasoline)) near10 generator)	US-PGPUB; USPAT; USOCR; FPRS; EPO; JPO; DERWENT	OR	OFF	2015/06/23 14:22
S9	10	(((multiple near3 fuel) or bi-fuel or (LPG near5 gasoline)) near10 generator) same (switch)	US-PGPUB; USPAT; USOCR; FPRS; EPO; JPO; DERWENT	OR	OFF	2015/06/23 14:23
S10	458	f02D19/0676.cpc.	US-PGPUB; USPAT; USOCR; FPRS; EPO;	OR	OFF	2015/06/23 14:23

			JPO; DERWENT			
S11	17	F02D19/0676.cpc. and (generator)	US-PGPUB; USPAT; USOCR; FPRS; EPO; JPO; DERWENT	OR	OFF	2015/06/23 14:24
S12	6	F02M21/0293.cpc. and (generator)	US-PGPUB; USPAT; USOCR; FPRS; EPO; JPO; DERWENT	OR	OFF	2015/06/23 14:24
S13	14	F02M21/0236.cpc. and (generator)	US-PGPUB; USPAT; USOCR; FPRS; EPO; JPO; DERWENT	OR	OFF	2015/06/23 14:25
S14	18	F02M21/0233.cpc. and (generator)	US-PGPUB; USPAT; USOCR; FPRS; EPO; JPO; DERWENT	OR	OFF	2015/06/23 14:27
S15	21	F02M13/08.cpc. and (generator)	US-PGPUB; USPAT; USOCR; FPRS; EPO; JPO; DERWENT	OR	OFF	2015/06/23 14:29
S16	0	(generator) and (dual near3 fuel) and (selectro near3 switch)	US-PGPUB; USPAT; USOCR; FPRS; EPO; JPO; DERWENT	OR	OFF	2015/06/23 14:32
S17	16	(generator) and (dual near3 fuel) and (selector near3 switch)	US-PGPUB; USPAT; USOCR; FPRS; EPO; JPO; DERWENT	OR	OFF	2015/06/23 14:32
S18	42	(generator) and ((dual near3 fuel) or (bi-fuel) or (multiple near3 fuel)) and (selector near3 switch)	US-PGPUB; USPAT; USOCR; FPRS; EPO;	OR	OFF	2015/06/23 14:33

			JPO; DERWENT			
S19	46	(generator) and ((dual near3 fuel) or (bi-fuel) or (multiple near3 fuel)) and (fuel near5 select$4 near5 switch)	US-PGPUB; USPAT; USOCR; FPRS; EPO; JPO; DERWENT	OR	OFF	2015/06/23 14:39
S20	46	(generator or genset) and ((dual near3 fuel) or (bi-fuel) or (multiple near3 fuel)) and (fuel near5 select$4 near5 switch)	US-PGPUB; USPAT; USOCR; FPRS; EPO; JPO; DERWENT	OR	OFF	2015/06/23 14:40
S21	728	137/383.ccls.	US-PGPUB; USPAT; USOCR; FPRS; EPO; JPO; DERWENT	OR	OFF	2015/06/23 14:58
S22	96	137/384.8.ccls.	US-PGPUB; USPAT; USOCR; FPRS; EPO; JPO; DERWENT	OR	OFF	2015/06/23 14:58
S23	0	317/317.5.ccls.	US-PGPUB; USPAT; USOCR; FPRS; EPO; JPO; DERWENT	OR	OFF	2015/06/23 15:04
S24	133	273/317.5.ccls.	US-PGPUB; USPAT; USOCR; FPRS; EPO; JPO; DERWENT	OR	OFF	2015/06/23 15:04
S25	161	292/4.ccls.	US-PGPUB; USPAT; USOCR; FPRS; EPO; JPO; DERWENT	OR	OFF	2015/06/23 15:06
S26	106	292/290.ccls.	US-PGPUB; USPAT; USOCR; FPRS; EPO;	OR	OFF	2015/06/23 15:07

			JPO; DERWENT			
S27	578	49/503.ccls.	US-PGPUB; USPAT; USOCR; FPRS; EPO; JPO; DERWENT	OR	OFF	2015/06/23 15:15
S28	92	123/2-3.ccls. and (fuel near5 switch)	US-PGPUB; USPAT; USOCR; FPRS; EPO; JPO; DERWENT	OR	OFF	2015/06/23 15:16
S29	163	(generator) same (LPG near20 gasoline)	US-PGPUB; USPAT; USOCR; FPRS; EPO; JPO; DERWENT	OR	OFF	2015/06/23 15:35
S30	163	(generator) same (LPG near20 gasoline)	US-PGPUB; USPAT; USOCR; FPRS; EPO; JPO; DERWENT	OR	OFF	2015/06/23 15:35
S31	19	(fuel near3 select$4 near3 switch) and (LPG near20 gasoline)	US-PGPUB; USPAT; USOCR; FPRS; EPO; JPO; DERWENT	OR	OFF	2015/06/23 15:53
S32	321,499	(select$4 near3 switch)	US-PGPUB; USPAT; USOCR; FPRS; EPO; JPO; DERWENT	OR	OFF	2015/06/23 15:55
S33	1,395	(select$4 near3 switch) same (enclosure)	US-PGPUB; USPAT; USOCR; FPRS; EPO; JPO; DERWENT	OR	OFF	2015/06/23 15:55
S34	123	(switch) same (enclosure) same (first near3 valve) same (second near3 valve)	US-PGPUB; USPAT; USOCR; FPRS; EPO;	OR	OFF	2015/06/23 15:56

			JPO; DERWENT			
S35	0	(switch) same (genset) same (first near3 valve) same (second near3 valve)	US-PGPUB; USPAT; USOCR; FPRS; EPO; JPO; DERWENT	OR	OFF	2015/06/23 15:58
S36	11	(genset) and ((switch) same (first near3 valve) same (second near3 valve))	US-PGPUB; USPAT; USOCR; FPRS; EPO; JPO; DERWENT	OR	OFF	2015/06/23 15:58
S37	550	(slider near3 switch).ti.	US-PGPUB; USPAT; USOCR; FPRS; EPO; JPO; DERWENT	OR	OFF	2015/06/23 16:17
S38	28	(slider near3 switch).ti.	US-PGPUB; USPAT	OR	OFF	2015/06/23 16:19
S39	2	("7135651" | "7223931").PN. OR ("7772508").URPN.	US-PGPUB; USPAT; USOCR	OR	OFF	2015/06/23 16:20
S40	209	200/241.ccls.	US-PGPUB; USPAT	OR	OFF	2015/06/23 16:23
S41	45	200/241.ccls. and (groove or slot)	US-PGPUB; USPAT	OR	OFF	2015/06/23 16:23
S42	151	290/1A.ccls. and (groove or slot)	US-PGPUB; USPAT; USOCR; FPRS; EPO; JPO; DERWENT	OR	OFF	2015/06/23 16:24
S43	414	290/1A.ccls. and (switch)	US-PGPUB; USPAT; USOCR; FPRS; EPO; JPO; DERWENT	OR	OFF	2015/06/23 16:25
S44	45	290/1A.ccls. and (select$4 near3 switch)	US-PGPUB; USPAT; USOCR; FPRS; EPO; JPO; DERWENT	OR	OFF	2015/06/23 16:25

S45	16,208	(select$4 near3 switch).ti.	US-PGPUB; USPAT; USOCR; FPRS; EPO; JPO; DERWENT	OR	OFF	2015/06/23 16:30
S46	42	(fuel near3 select$4 near3 switch).ti.	US-PGPUB; USPAT; USOCR; FPRS; EPO; JPO; DERWENT	OR	OFF	2015/06/23 16:30
S47	1	("2004/0240141").URPN.	USPAT	OR	OFF	2015/06/23 16:31
S48	436	261/16.ccls.	USPAT	OR	OFF	2015/06/23 16:38
S49	18	261/16.ccls. and switch	USPAT	OR	OFF	2015/06/23 16:38
S50	0	48/180R.ccls.	USPAT	OR	OFF	2015/06/23 16:38
S51	0	48/180C.ccls.	USPAT	OR	OFF	2015/06/23 16:38
S52	0	48/180C.ccls.	US-PGPUB; USPAT; USOCR; FPRS; EPO; JPO; DERWENT	OR	OFF	2015/06/23 16:39
S53	834	123/525.ccls.	US-PGPUB; USPAT; USOCR; FPRS; EPO; JPO; DERWENT	OR	OFF	2015/06/23 16:39
S54	215	123/525.ccls. and (switch)	US-PGPUB; USPAT; USOCR; FPRS; EPO; JPO; DERWENT	OR	OFF	2015/06/23 16:39
S55	76	123/525.ccls. and (switch) and (dual near3 fuel)	US-PGPUB; USPAT; USOCR; FPRS; EPO; JPO; DERWENT	OR	OFF	2015/06/23 16:39

S56	15	("20130122439" | "20130098349" | "20060169238" | "20040240141" | "4489699").PN.	US-PGPUB; USPAT; USOCR; FPRS; EPO; JPO; DERWENT	OR	OFF	2015/06/29 14:24
S57	2	(dual near3 fuel near3 engine) same (fuel near3 handle)	US-PGPUB; USPAT; USOCR	OR	OFF	2015/12/17 18:15
S58	3	(dual near3 fuel near3 engine) same (fuel near3 handle)	US-PGPUB; USPAT; USOCR; FPRS; EPO; JPO; DERWENT	OR	OFF	2015/12/17 18:16
S59	16	(dual near3 fuel near3 engine) same (fuel near3 lever)	US-PGPUB; USPAT; USOCR; FPRS; EPO; JPO; DERWENT	OR	OFF	2015/12/17 18:17
S60	5	(dual near3 fuel near3 engine) same (fuel near3 valve near3 (lever or switch or handle))	US-PGPUB; USPAT; USOCR; FPRS; EPO; JPO; DERWENT	OR	OFF	2015/12/17 18:23
S61	6	(dual near3 fuel near3 (engine or generator)) same (fuel near3 valve near3 (lever or switch or handle))	US-PGPUB; USPAT; USOCR; FPRS; EPO; JPO; DERWENT	OR	OFF	2015/12/17 18:45
S62	24	(dual near3 fuel near3 (engine or generator)) same (fuel near3 (valve or supply) near3 (lever or switch or handle))	US-PGPUB; USPAT; USOCR; FPRS; EPO; JPO; DERWENT	OR	OFF	2015/12/17 18:45
S63	4,939	(gas near3 station).ti.	US-PGPUB; USPAT; USOCR; FPRS; EPO; JPO; DERWENT	OR	OFF	2015/12/17 18:55
S64	39	(gas near3 station).ti. and lever	US-PGPUB; USPAT; USOCR; FPRS; EPO;	OR	OFF	2015/12/17 18:55

			JPO; DERWENT			
S65	292	(generator).ti. and ((dual or multiple) near3 (fuel))	US-PGPUB; USPAT; USOCR; FPRS; EPO; JPO; DERWENT	OR	OFF	2015/12/17 18:56
S66	98	(generator).ti. and ((dual or multiple) near3 (fuel)) and (engine)	US-PGPUB; USPAT; USOCR; FPRS; EPO; JPO; DERWENT	OR	OFF	2015/12/17 18:56
S67	13	(generator).ti. and (((dual or multiple) near3 (fuel)) same (switch or handle or lever)) and (engine)	US-PGPUB; USPAT; USOCR; FPRS; EPO; JPO; DERWENT	OR	OFF	2015/12/17 18:56
S69	39	"4489699"	US-PGPUB; USPAT; USOCR	OR	OFF	2017/12/28 20:09
S70	14	F02D19/0613.cpc. and ((dual near3 fuel) same (switch))	US-PGPUB; USPAT; USOCR	OR	OFF	2018/01/02 20:38
S71	25	F02D19/0613.cpc. and ((dual near3 fuel) same (switch))	US-PGPUB; USPAT; USOCR; FPRS; EPO; JPO; DERWENT	OR	OFF	2018/01/02 20:38
S72	72	F02D19/0647.cpc. and ((dual near3 fuel) same (switch))	US-PGPUB; USPAT; USOCR; FPRS; EPO; JPO; DERWENT	OR	OFF	2018/01/02 20:39
S73	77	F02D19/0647.cpc. and ((dual near3 fuel) same (switch))	US-PGPUB; USPAT; USOCR; FPRS; EPO; JPO; DERWENT	OR	ON	2018/01/02 20:39
S74	11	F02D19/06.cpc. and ((dual near3 fuel) same (switch))	US-PGPUB; USPAT; USOCR; FPRS; EPO;	OR	ON	2018/01/02 20:40

			JPO; DERWENT			
S75	32	F02M13/08.cpc. and ((dual near3 fuel) same (switch))	US-PGPUB; USPAT; USOCR; FPRS; EPO; JPO; DERWENT	OR	ON	2018/01/02 20:41
S76	9	(fuel near3 select$4 near3 switch) same (valve near3 assembly)	US-PGPUB; USPAT; USOCR; FPRS; EPO; JPO; DERWENT	OR	OFF	2018/08/01 21:24
S77	0	(geneartor) same (fuel near3 switch) same (valve near3 assembly)	US-PGPUB; USPAT; USOCR; FPRS; EPO; JPO; DERWENT	OR	OFF	2018/08/01 21:25
S78	9	(generator) same (fuel near3 switch) same (valve near3 assembly)	US-PGPUB; USPAT; USOCR; FPRS; EPO; JPO; DERWENT	OR	OFF	2018/08/01 21:25
S79	6,704	(generator) same (fuel near3 valve)	US-PGPUB; USPAT; USOCR; FPRS; EPO; JPO; DERWENT	OR	OFF	2018/08/01 21:26
S80	10	(generator) same (dual near2 fuel near3 valve)	US-PGPUB; USPAT; USOCR; FPRS; EPO; JPO; DERWENT	OR	OFF	2018/08/01 21:26
S81	13	(generator) same (dual near2 fuel near3 switch)	US-PGPUB; USPAT; USOCR; FPRS; EPO; JPO; DERWENT	OR	OFF	2018/08/01 21:27
S82	13	(generator) same (dual near3 fuel near3 switch)	US-PGPUB; USPAT; USOCR; FPRS; EPO;	OR	OFF	2018/08/01 21:28

			JPO; DERWENT			
S83	19	(gaseous near3 fuel) same (dual near3 fuel near3 switch)	US-PGPUB; USPAT; USOCR; FPRS; EPO; JPO; DERWENT	OR	OFF	2018/08/01 21:54
S84	52	(gaseous near3 fuel) same (fuel near3 select$4 near3 switch)	US-PGPUB; USPAT; USOCR; FPRS; EPO; JPO; DERWENT	OR	OFF	2018/08/01 21:56
S85	85	F02D19/0613.cpc. and (switch same valve)	US-PGPUB; USPAT; USOCR; FPRS; EPO; JPO; DERWENT	OR	OFF	2018/08/01 22:03
S86	31	F02D19/0613.cpc. and (switch same valve same (user or operator))	US-PGPUB; USPAT; USOCR; FPRS; EPO; JPO; DERWENT	OR	OFF	2018/08/01 22:04
S87	25	F02D19/081.cpc. and (switch same valve same (user or operator))	US-PGPUB; USPAT; USOCR; FPRS; EPO; JPO; DERWENT	OR	OFF	2018/08/01 22:08
S88	16	F02D19/0642.cpc. and (switch same valve same (user or operator))	US-PGPUB; USPAT; USOCR; FPRS; EPO; JPO; DERWENT	OR	OFF	2018/08/01 22:10
S89	39	"4489699"	USPAT	OR	OFF	2018/08/02 14:52
S90	1	"20040240141"	USPAT	OR	OFF	2018/08/02 14:53
S91	3	"20040240141"	US-PGPUB; USPAT; USOCR; FPRS; EPO; JPO; DERWENT	OR	OFF	2018/08/02 14:53

S92	3	"20060169238"	US-PGPUB; USPAT; USOCR; FPRS; EPO; JPO; DERWENT	OR	OFF	2018/08/02 14:53
S93	4	"20130098349"	US-PGPUB; USPAT; USOCR; FPRS; EPO; JPO; DERWENT	OR	OFF	2018/08/02 14:55
S94	5	"20130122439"	US-PGPUB; USPAT; USOCR; FPRS; EPO; JPO; DERWENT	OR	OFF	2018/08/02 14:58
S95	1	"20060169238"	USPAT	OR	OFF	2018/08/02 14:58
S96	0	123/198E.ccls. and (duel near3 fuel)	USPAT	OR	OFF	2018/08/02 15:01
S97	1	123/198E.ccls. and (dual near3 fuel)	USPAT	OR	OFF	2018/08/02 15:01
S98	1	123/198E.ccls. and (dual near3 fuel)	US-PGPUB; USPAT; USOCR; FPRS; EPO; JPO; DERWENT	OR	OFF	2018/08/02 15:02
S99	10	123/2.ccls. and (dual near3 fuel)	US-PGPUB; USPAT; USOCR; FPRS; EPO; JPO; DERWENT	OR	OFF	2018/08/02 16:27
S100	0	60/39.463. and (dual near3 fuel)	US-PGPUB; USPAT; USOCR; FPRS; EPO; JPO; DERWENT	OR	OFF	2018/08/02 16:31
S101	121	60/39.463.ccls. and (dual near3 fuel)	US-PGPUB; USPAT; USOCR; FPRS; EPO; JPO; DERWENT	OR	OFF	2018/08/02 16:31

S102	34	60/39.463.ccls. and ((dual near3 fuel) same (valve))	US-PGPUB; USPAT; USOCR; FPRS; EPO; JPO; DERWENT	OR	OFF	2018/08/02 16:32
S103	50	"4489699"	US-PGPUB; USPAT; USOCR; FPRS; EPO; JPO; DERWENT	OR	OFF	2018/08/02 17:42
S104	5	generator and (((dual or multiple or second$4) near3 (fuel)) same (valve near2 handle) same (user or operator or manual or manually))	US-PGPUB; USPAT; USOCR; FPRS; EPO; JPO; DERWENT	OR	ON	2019/06/16 23:09
S105	16	generator and (((dual or multiple or second$4) near3 (fuel)) same (valve near2 handle))	US-PGPUB; USPAT; USOCR; FPRS; EPO; JPO; DERWENT	OR	ON	2019/06/16 23:10
S106	20	generator and (((dual or multiple or second$4) near3 (fuel)) same (valve near3 handle))	US-PGPUB; USPAT; USOCR; FPRS; EPO; JPO; DERWENT	OR	ON	2019/06/16 23:10
S107	540	generator and (((dual or multiple or second$4) near3 (fuel)) same (valve) same (user or operator or manual or manually))	US-PGPUB; USPAT; USOCR; FPRS; EPO; JPO; DERWENT	OR	ON	2019/06/16 23:12
S108	124	generator and (((dual or multiple or second$4) near3 (fuel)) same (valve) same (user or operator or manual or manually) same switch)	US-PGPUB; USPAT; USOCR; FPRS; EPO; JPO; DERWENT	OR	ON	2019/06/16 23:13
S109	4	("2681694").URPN.	USPAT	OR	OFF	2019/06/16 23:23
S110	37	F02D19/0676.cpc. and ((valve) same (user or operator or manual or manually) same switch)	US-PGPUB; USPAT; USOCR; FPRS; EPO;	OR	ON	2019/06/17 17:17

			JPO; DERWENT			
S111	19	F02D19/0681.cpc. and ((valve) same (user or operator or manual or manually) same switch)	US-PGPUB; USPAT; USOCR; FPRS; EPO; JPO; DERWENT	OR	ON	2019/06/17 17:21
S112	3	("2008/0022983").URPN.	USPAT	OR	OFF	2019/06/17 17:25
S113	0	F02B2063/046.cpc. and ((valve) same (user or operator or manual or manually) same switch)	US-PGPUB; USPAT; USOCR; FPRS; EPO; JPO; DERWENT	OR	ON	2019/06/17 17:29
S114	23	F02B2063/046.cpc. and ((valve) same (user or operator or manual or manually))	US-PGPUB; USPAT; USOCR; FPRS; EPO; JPO; DERWENT	OR	ON	2019/06/17 17:29
S115	23	F02B2063/046.cpc. and ((valve) same (user or operator or manual or manually or mechanically or mechanical))	US-PGPUB; USPAT; USOCR; FPRS; EPO; JPO; DERWENT	OR	ON	2019/06/17 17:54
S116	33	F02B63/048.cpc. and ((valve) same (user or operator or manual or manually or mechanically or mechanical))	US-PGPUB; USPAT; USOCR; FPRS; EPO; JPO; DERWENT	OR	ON	2019/06/17 17:54
S117	1,201	(((dual or multiple or second$4 or bi) near3 (fuel)) same generator) and ((valve) same (user or operator or manual or manually or mechanically or mechanical))	US-PGPUB; USPAT; USOCR; FPRS; EPO; JPO; DERWENT	OR	ON	2019/06/17 18:00
S118	72	(((dual or multiple or second$4 or bi) near3 (fuel)) same generator) and ((valve) same (user or operator or manual or manually or mechanically or mechanical) same handle)	US-PGPUB; USPAT; USOCR; FPRS; EPO; JPO; DERWENT	OR	ON	2019/06/17 18:01
S119	14	(((dual or multiple or second$4 or bi) near3 (fuel)) same generator).ti. and ((valve) same (user or operator or	US-PGPUB; USPAT; USOCR;	OR	ON	2019/06/17 18:05

		manual or manually or mechanically or mechanical))	FPRS; EPO; JPO; DERWENT			
S120	5	(((dual or multiple or second$4 or bi) near3 (fuel)) same generator).ti. and ((valve) same handle)	US-PGPUB; USPAT; USOCR; FPRS; EPO; JPO; DERWENT	OR	ON	2019/06/17 18:12
S121	139	(((dual or multiple or second$4 or bi) near3 (fuel)) same generator) and ((valve) same handle)	US-PGPUB; USPAT; USOCR; FPRS; EPO; JPO; DERWENT	OR	ON	2019/06/17 18:12
S122	34	(((dual or multiple or second$4 or bi) near3 (fuel)) same generator) and ((valve) near3 handle)	US-PGPUB; USPAT; USOCR; FPRS; EPO; JPO; DERWENT	OR	ON	2019/06/17 18:12
S123	555	generator and (((dual or multiple or second$4 or bi) near3 (fuel)) same (valve) same (user or operator or manual or manually))	US-PGPUB; USPAT; USOCR; FPRS; EPO; JPO; DERWENT	OR	ON	2019/06/17 18:23
S124	310	(((dual or multiple or second$4 or bi) near3 (fuel)) same generator) and ((valve) near3 (switch or lever or selector))	US-PGPUB; USPAT; USOCR; FPRS; EPO; JPO; DERWENT	OR	ON	2019/06/17 18:23
S125	275	(generator same (case or casing or housing or enclosure)) and (((dual or multiple or second$4 or bi) near3 (fuel))) and ((valve) same (fuel near3 (switch or lever or selector or handle)))	US-PGPUB; USPAT; USOCR; FPRS; EPO; JPO; DERWENT	OR	ON	2019/06/17 18:36
S126	9	("2007/0137591").URPN.	USPAT	OR	OFF	2019/06/17 18:40
S127	725,165	(generator).ti. engine and (((dual or multiple or second$4 or bi) near3 (fuel))) and ((valve) same (fuel near3 (switch or lever or selector or handle)))	US-PGPUB; USPAT; USOCR; FPRS; EPO; JPO; DERWENT	OR	ON	2019/06/17 18:48
S128	23	(generator).ti. and engine and (((dual or multiple or second$4 or bi) near3	US-PGPUB; USPAT;	OR	ON	2019/06/17 18:49

		(fuel))) and ((valve) same (fuel near3 (switch or lever or selector or handle)))	USOCR; FPRS; EPO; JPO; DERWENT			
S129	47	(generator).ti. and engine and (((dual or multiple or second$4 or bi) near3 (fuel))) and ((fuel near3 (switch or lever or selector or handle)))	US-PGPUB; USPAT; USOCR; FPRS; EPO; JPO; DERWENT	OR	ON	2019/06/17 18:49
S130	0	(((dual or multiple or second$4 or bi) near3 (fuel) near3 gnerator)) and (second$4 near3 (fuel near3 (switch or lever or selector or handle)))	US-PGPUB; USPAT; USOCR; FPRS; EPO; JPO; DERWENT	OR	ON	2019/06/17 18:56
S131	18	(((dual or multiple or second$4 or bi) near3 (fuel) near3 generator)) and (second$4 near3 (fuel near3 (switch or lever or selector or handle)))	US-PGPUB; USPAT; USOCR; FPRS; EPO; JPO; DERWENT	OR	ON	2019/06/17 18:57
S132	34	(((dual or multiple or second$4 or bi) near3 (fuel) near3 generator)) and ((user or manual or manually or operator or mechanically) same (fuel near3 (switch or lever or selector or handle)))	US-PGPUB; USPAT; USOCR; FPRS; EPO; JPO; DERWENT	OR	ON	2019/06/17 19:00
S133	393	(generator or genset) and (((dual or multiple or second$4 or bi) near3 (fuel))) and ((user or manual or manually or operator or mechanically) same (fuel near3 (switch or lever or selector or handle)))	US-PGPUB; USPAT; USOCR; FPRS; EPO; JPO; DERWENT	OR	ON	2019/06/17 19:03
S134	433	123/525.ccls.	USPAT	OR	OFF	2019/06/17 19:31
S135	186	123/525.ccls. and (fuel same valve same (handle or switch or lever or selector))	US-PGPUB; USPAT; USOCR; FPRS; EPO; JPO; DERWENT	OR	OFF	2019/06/17 19:31
S136	22	123/525.ccls. and (generator or genset) and (fuel same valve same (handle or switch or lever or selector))	US-PGPUB; USPAT; USOCR; FPRS; EPO; JPO; DERWENT	OR	OFF	2019/06/17 19:32

S137	5	"20070137591"	US-PGPUB; USPAT; USOCR; FPRS; EPO; JPO; DERWENT	OR	OFF	2019/06/17 19:37
S138	1	"20070137591"	USPAT	OR	OFF	2019/09/25 13:50
S139	2	"20070137591"	US-PGPUB; USPAT	OR	OFF	2019/09/25 13:50
S140	46	"4489699"	US-PGPUB; USPAT	OR	OFF	2019/09/25 13:50
S141	63	("20020134362" | "20040139943" | "20100258099" | "20110168133" | "20110253102" | "20130047964" | "20130220274" | "20140202430" | "20140238340" | "20140373531" | "20150122230" | "2722208" | "3384059" | "3412258" | "3659574" | "3718000" | "3783849" | "3888223" | "4335697" | "4372276" | "4373493" | "4393848" | "4450821" | "4463735" | "4480595" | "4502453" | "4619240" | "4628871" | "4708094" | "4895124" | "4979480" | "5092305" | "5161496" | "5171487" | "5228423" | "5287839" | "5320078" | "5325835" | "5379740" | "5419291" | "5438968" | "5450832" | "5611312" | "5673670" | "5809979" | "5816224" | "6082323" | "6213083" | "6223730" | "6276345" | "6401685" | "6453877" | "6591817" | "6914342" | "7905469" | "8342158" | "8590510" | "9435273" | "20040240141" | "20060169238" | "20130098349" | "20130122439" | "4489699").PN.	US-PGPUB; USPAT	OR	OFF	2019/12/19 20:00
S143	1	"10598101"	USPAT	OR	OFF	2021/02/23 08:07

3/8/2021 10:10:58 PM
C:\Users\shasan2\Documents\EAST\Custom Office Templates\EAST\Workspaces\Dual Fuel Selector Switch 14069747.wsp

Doc code: IDS
Doc description: Information Disclosure Statement (IDS) Filed

PTO/SB/08a (02-18)
Approved for use through 11/30/2020. OMB 0651-0031
U.S. Patent and Trademark Office; U.S. DEPARTMENT OF COMMERCE
Under the Paperwork Reduction Act of 1995, no persons are required to respond to a collection of information unless it contains a valid OMB control number.

INFORMATION DISCLOSURE STATEMENT BY APPLICANT

(Not for submission under 37 CFR 1.99)

Application Number	16789722
Filing Date	2020-02-13
First Named Inventor	Mark J. Sarder et al.
Art Unit	3747
Examiner Name	Syed O. Hasan
Attorney Docket Number	CET1090.075

U.S.PATENTS Remove

Examiner Initial*	Cite No	Patent Number	Kind Code[1]	Issue Date	Name of Patentee or Applicant of cited Document	Pages,Columns,Lines where Relevant Passages or Relevant Figures Appear
	1	2398437		1946-04-16	McGill et al.	
	2	3911956		1975-10-14	LeBreton et al.	
	3	4323046		1982-04-06	Barber	
	4	4375795		1983-03-08	Billingsley	
	5	4471805		1984-09-18	Solie et al.	
	6	4492207		1985-01-08	Hallberg	
	7	4750514		1988-06-14	Omori et al.	
	8	4788960		1988-12-06	Oshizawa	

INFORMATION DISCLOSURE STATEMENT BY APPLICANT (Not for submission under 37 CFR 1.99)		
	Application Number	16789722
	Filing Date	2020-02-13
	First Named Inventor	Mark J. Sarder et al.
	Art Unit	3747
	Examiner Name	Syed O. Hasan
	Attorney Docket Number	CET1090.075

	9	5934320		1999-08-10	O'Reilly et al.	
	10	6543395	B2	2003-04-08	Green	
	11	6591817	B2	2003-07-15	Deutsch	
	12	7591257	B2	2009-09-22	Bayer et al.	
	13	7802562	B2	2010-09-28	Lippa et al.	
	14	7905469	B2	2011-03-15	Nickels et al.	
	15	8042569	B2	2011-10-25	Morris	
	16	8757139	B2	2014-06-24	Deng	
	17	8944027	B2	2015-02-03	Montgomery	
	18	9175601	B2	2015-11-03	Markoski	

If you wish to add additional U.S. Patent citation information please click the Add button. Add

U.S.PATENT APPLICATION PUBLICATIONS Remove

INFORMATION DISCLOSURE STATEMENT BY APPLICANT

(Not for submission under 37 CFR 1.99)

Application Number	16789722
Filing Date	2020-02-13
First Named Inventor	Mark J. Sarder et al.
Art Unit	3747
Examiner Name	Syed O. Hasan
Attorney Docket Number	CET1090.075

Examiner Initial*	Cite No	Publication Number	Kind Code[1]	Publication Date	Name of Patentee or Applicant of cited Document	Pages,Columns,Lines where Relevant Passages or Relevant Figures Appear
	1	20070137591	A1	2007-06-21	Sugimoto et al.	

If you wish to add additional U.S. Published Application citation information please click the Add button. Add

FOREIGN PATENT DOCUMENTS Remove

Examiner Initial*	Cite No	Foreign Document Number[3]	Country Code[2]	Kind Code[4]	Publication Date	Name of Patentee or Applicant of cited Document	Pages,Columns,Lines where Relevant Passages or Relevant Figures Appear	T[5]
	1	2401704	CN	Y	2000-10-18	Zhejiang University		
	2	102006008524	DE	A1	2006-08-31	Voss Automotive GMBH		
	3	189800	GB	A	1923-10-11	Sonderegger		
	4	532903	GB	A	1941-02-03	Henderson et al.		

If you wish to add additional Foreign Patent Document citation information please click the Add button Add

NON-PATENT LITERATURE DOCUMENTS Remove

Examiner Initials*	Cite No	Include name of the author (in CAPITAL LETTERS), title of the article (when appropriate), title of the item (book, magazine, journal, serial, symposium, catalog, etc), date, pages(s), volume-issue number(s), publisher, city and/or country where published.	T[5]
	1	Multi-Power Ltd., MODELMP5500DF 13 HP Generator Owner's Manual, July 2006, pp. 1-38	

ALL REFERENCES CONSIDERED EXCEPT WHERE LINED THROUGH. /S.O.H/

INFORMATION DISCLOSURE STATEMENT BY APPLICANT (Not for submission under 37 CFR 1.99)		
	Application Number	16789722
	Filing Date	2020-02-13
	First Named Inventor	Mark J. Sarder et al.
	Art Unit	3747
	Examiner Name	Syed O. Hasan
	Attorney Docket Number	CET1090.075

	2	Winco Inc., Home Power TRI-FUEL Portable Generators Owners Manual, November 21, 2017, pp. 1-16	
	3	Winco Inc., HPS9000VE/E and HPS9000VE-03/A Generator Installation and Operators Manual, August 9, 2013, pp. 1-16	
	4	Winco Inc., Dyna ME5000VA Installation, Operation, and Maintenance Instructions, November 21, 2017, pp. 1-12	
	5	Winco Inc., Dyna DL9000E, DL5000H, and D3000 Portable Generators Installation, Operation, and Maintenance Instructions, November 21, 2017, pp. 1-12	
	6	PowerLand Industrial Tools, Powerland Tri Fuel Generator Owner's Manual, December 24, 2015, pp. 1-41	
	7	Winco Inc., HPS6000HE/I Bi-Fuel Generator Installation and Operators Manual, March 8, 2010, pp. 1-20	

If you wish to add additional non-patent literature document citation information please click the Add button Add

EXAMINER SIGNATURE

Examiner Signature	/SYED O HASAN/	Date Considered	03/08/2021

*EXAMINER: Initial if reference considered, whether or not citation is in conformance with MPEP 609. Draw line through a citation if not in conformance and not considered. Include copy of this form with next communication to applicant.

[1] See Kind Codes of USPTO Patent Documents at www.USPTO.GOV or MPEP 901.04. [2] Enter office that issued the document, by the two-letter code (WIPO Standard ST.3). [3] For Japanese patent documents, the indication of the year of the reign of the Emperor must precede the serial number of the patent document. [4] Kind of document by the appropriate symbols as indicated on the document under WIPO Standard ST.16 if possible. [5] Applicant is to place a check mark here if English language translation is attached.

INFORMATION DISCLOSURE STATEMENT BY APPLICANT (Not for submission under 37 CFR 1.99)		
	Application Number	16789722
	Filing Date	2020-02-13
	First Named Inventor	Mark J. Sarder et al.
	Art Unit	3747
	Examiner Name	Syed O. Hasan
	Attorney Docket Number	CET1090.075

CERTIFICATION STATEMENT

Please see 37 CFR 1.97 and 1.98 to make the appropriate selection(s):

That each item of information contained in the information disclosure statement was first cited in any communication from a foreign patent office in a counterpart foreign application not more than three months prior to the filing of the information disclosure statement. See 37 CFR 1.97(e)(1).

OR

☐ That no item of information contained in the information disclosure statement was cited in a communication from a foreign patent office in a counterpart foreign application, and, to the knowledge of the person signing the certification after making reasonable inquiry, no item of information contained in the information disclosure statement was known to any individual designated in 37 CFR 1.56(c) more than three months prior to the filing of the information disclosure statement. See 37 CFR 1.97(e)(2).

See attached certification statement.

The fee set forth in 37 CFR 1.17 (p) has been submitted herewith.

A certification statement is not submitted herewith.

SIGNATURE

A signature of the applicant or representative is required in accordance with CFR 1.33, 10.18. Please see CFR 1.4(d) for the form of the signature.

Signature	/Kevin R. Rosin/	Date (YYYY-MM-DD)	2020-12-15
Name/Print	Kevin R. Rosin	Registration Number	55584

This collection of information is required by 37 CFR 1.97 and 1.98. The information is required to obtain or retain a benefit by the public which is to file (and by the USPTO to process) an application. Confidentiality is governed by 35 U.S.C. 122 and 37 CFR 1.14. This collection is estimated to take 1 hour to complete, including gathering, preparing and submitting the completed application form to the USPTO. Time will vary depending upon the individual case. Any comments on the amount of time you require to complete this form and/or suggestions for reducing this burden, should be sent to the Chief Information Officer, U.S. Patent and Trademark Office, U.S. Department of Commerce, P.O. Box 1450, Alexandria, VA 22313-1450. DO NOT SEND FEES OR COMPLETED FORMS TO THIS ADDRESS. **SEND TO: Commissioner for Patents, P.O. Box 1450, Alexandria, VA 22313-1450.**

ALL REFERENCES CONSIDERED EXCEPT WHERE LINED THROUGH. /S.O.H/

Privacy Act Statement

The Privacy Act of 1974 (P.L. 93-579) requires that you be given certain information in connection with your submission of the attached form related to a patent application or patent. Accordingly, pursuant to the requirements of the Act, please be advised that: (1) the general authority for the collection of this information is 35 U.S.C. 2(b)(2); (2) furnishing of the information solicited is voluntary; and (3) the principal purpose for which the information is used by the U.S. Patent and Trademark Office is to process and/or examine your submission related to a patent application or patent. If you do not furnish the requested information, the U.S. Patent and Trademark Office may not be able to process and/or examine your submission, which may result in termination of proceedings or abandonment of the application or expiration of the patent.

The information provided by you in this form will be subject to the following routine uses:

1. The information on this form will be treated confidentially to the extent allowed under the Freedom of Information Act (5 U.S.C. 552) and the Privacy Act (5 U.S.C. 552a). Records from this system of records may be disclosed to the Department of Justice to determine whether the Freedom of Information Act requires disclosure of these record s.

2. A record from this system of records may be disclosed, as a routine use, in the course of presenting evidence to a court, magistrate, or administrative tribunal, including disclosures to opposing counsel in the course of settlement negotiations.

3. A record in this system of records may be disclosed, as a routine use, to a Member of Congress submitting a request involving an individual, to whom the record pertains, when the individual has requested assistance from the Member with respect to the subject matter of the record.

4. A record in this system of records may be disclosed, as a routine use, to a contractor of the Agency having need for the information in order to perform a contract. Recipients of information shall be required to comply with the requirements of the Privacy Act of 1974, as amended, pursuant to 5 U.S.C. 552a(m).

5. A record related to an International Application filed under the Patent Cooperation Treaty in this system of records may be disclosed, as a routine use, to the International Bureau of the World Intellectual Property Organization, pursuant to the Patent Cooperation Treaty.

6. A record in this system of records may be disclosed, as a routine use, to another federal agency for purposes of National Security review (35 U.S.C. 181) and for review pursuant to the Atomic Energy Act (42 U.S.C. 218(c)).

7. A record from this system of records may be disclosed, as a routine use, to the Administrator, General Services, or his/her designee, during an inspection of records conducted by GSA as part of that agency's responsibility to recommend improvements in records management practices and programs, under authority of 44 U.S.C. 2904 and 2906. Such disclosure shall be made in accordance with the GSA regulations governing inspection of records for this purpose, and any other relevant (i.e., GSA or Commerce) directive. Such disclosure shall not be used to make determinations about individuals.

8. A record from this system of records may be disclosed, as a routine use, to the public after either publication of the application pursuant to 35 U.S.C. 122(b) or issuance of a patent pursuant to 35 U.S.C. 151. Further, a record may be disclosed, subject to the limitations of 37 CFR 1.14, as a routine use, to the public if the record was filed in an application which became abandoned or in which the proceedings were terminated and which application is referenced by either a published application, an application open to public inspections or an issued patent.

9. A record from this system of records may be disclosed, as a routine use, to a Federal, State, or local law enforcement agency, if the USPTO becomes aware of a violation or potential violation of law or regulation.

PTO/SB/08a (02-18)
Approved for use through 11/30/2020. OMB 0651-0031
U.S. Patent and Trademark Office; U.S. DEPARTMENT OF COMMERCE
Under the Paperwork Reduction Act of 1995, no persons are required to respond to a collection of information unless it contains a valid OMB control number.

INFORMATION DISCLOSURE STATEMENT BY APPLICANT

(Not for submission under 37 CFR 1.99)

Application Number	16789722
Filing Date	2020-02-13
First Named Inventor	Mark J. Sarder et al.
Art Unit	3747
Examiner Name	Syed O. Hasan
Attorney Docket Number	CET1090.075

U.S.PATENTS Remove

Examiner Initial*	Cite No	Patent Number	Kind Code[1]	Issue Date	Name of Patentee or Applicant of cited Document	Pages,Columns,Lines where Relevant Passages or Relevant Figures Appear
	1	2398437		1946-04-16	McGill et al.	
	2	3911956		1975-10-14	LeBreton et al.	
	3	4323046		1982-04-06	Barber	
	4	4375795		1983-03-08	Billingsley	
	5	4471805		1984-09-18	Solie et al.	
	6	4492207		1985-01-08	Hallberg	
	7	4750514		1988-06-14	Omori et al.	
	8	4788960		1988-12-06	Oshizawa	

INFORMATION DISCLOSURE STATEMENT BY APPLICANT (Not for submission under 37 CFR 1.99)		
	Application Number	16789722
	Filing Date	2020-02-13
	First Named Inventor	Mark J. Sarder et al.
	Art Unit	3747
	Examiner Name	Syed O. Hasan
	Attorney Docket Number	CET1090.075

	9	5934320		1999-08-10	O'Reilly et al.	
	10	6543395	B2	2003-04-08	Green	
	11	6591817	B2	2003-07-15	Deutsch	
	12	7591257	B2	2009-09-22	Bayer et al.	
	13	7802562	B2	2010-09-28	Lippa et al.	
	14	7905469	B2	2011-03-15	Nickels et al.	
	15	8042569	B2	2011-10-25	Morris	
	16	8757139	B2	2014-06-24	Deng	
	17	8944027	B2	2015-02-03	Montgomery	
	18	9175601	B2	2015-11-03	Markoski	

If you wish to add additional U.S. Patent citation information please click the Add button. Add

U.S.PATENT APPLICATION PUBLICATIONS Remove

INFORMATION DISCLOSURE STATEMENT BY APPLICANT (Not for submission under 37 CFR 1.99)		
	Application Number	16789722
	Filing Date	2020-02-13
	First Named Inventor	Mark J. Sarder et al.
	Art Unit	3747
	Examiner Name	Syed O. Hasan
	Attorney Docket Number	CET1090.075

Examiner Initial*	Cite No	Publication Number	Kind Code[1]	Publication Date	Name of Patentee or Applicant of cited Document	Pages,Columns,Lines where Relevant Passages or Relevant Figures Appear
	1	20070137591	A1	2007-06-21	Sugimoto et al.	

If you wish to add additional U.S. Published Application citation information please click the Add button. Add

FOREIGN PATENT DOCUMENTS Remove

Examiner Initial*	Cite No	Foreign Document Number[3]	Country Code[2] i	Kind Code[4]	Publication Date	Name of Patentee or Applicant of cited Document	Pages,Columns,Lines where Relevant Passages or Relevant Figures Appear	T[5]
	1	2401704	CN	Y	2000-10-18	Zhejiang University		
	2	102006008524	DE	A1	2006-08-31	Voss Automotive GMBH		
	3	189800	GB	A	1923-10-11	Sonderegger		
	4	532903	GB	A	1941-02-03	Henderson et al.		

If you wish to add additional Foreign Patent Document citation information please click the Add button Add

NON-PATENT LITERATURE DOCUMENTS Remove

Examiner Initials*	Cite No	Include name of the author (in CAPITAL LETTERS), title of the article (when appropriate), title of the item (book, magazine, journal, serial, symposium, catalog, etc), date, pages(s), volume-issue number(s), publisher, city and/or country where published.	T[5]
	1	Multi-Power Ltd., MODELMP5500DF 13 HP Generator Owner's Manual, July 2006, pp. 1-38	

INFORMATION DISCLOSURE STATEMENT BY APPLICANT (Not for submission under 37 CFR 1.99)		
	Application Number	16789722
	Filing Date	2020-02-13
	First Named Inventor	Mark J. Sarder et al.
	Art Unit	3747
	Examiner Name	Syed O. Hasan
	Attorney Docket Number	CET1090.075

	2	Winco Inc., Home Power TRI-FUEL Portable Generators Owners Manual, November 21, 2017, pp. 1-16	
	3	Winco Inc., HPS9000VE/E and HPS9000VE-03/A Generator Installation and Operators Manual, August 9, 2013, pp. 1-16	
	4	Winco Inc., Dyna ME5000VA Installation, Operation, and Maintenance Instructions, November 21, 2017, pp. 1-12	
	5	Winco Inc., Dyna DL9000E, DL5000H, and D3000 Portable Generators Installation, Operation, and Maintenance Instructions, November 21, 2017, pp. 1-12	
	6	PowerLand Industrial Tools, Powerland Tri Fuel Generator Owner's Manual, December 24, 2015, pp. 1-41	
	7	Winco Inc., HPS6000HE/I Bi-Fuel Generator Installation and Operators Manual, March 8, 2010, pp. 1-20	

If you wish to add additional non-patent literature document citation information please click the Add button Add

EXAMINER SIGNATURE

Examiner Signature		Date Considered	

*EXAMINER: Initial if reference considered, whether or not citation is in conformance with MPEP 609. Draw line through a citation if not in conformance and not considered. Include copy of this form with next communication to applicant.

[1] See Kind Codes of USPTO Patent Documents at www.USPTO.GOV or MPEP 901.04. [2] Enter office that issued the document, by the two-letter code (WIPO Standard ST.3). [3] For Japanese patent documents, the indication of the year of the reign of the Emperor must precede the serial number of the patent document. [4] Kind of document by the appropriate symbols as indicated on the document under WIPO Standard ST.16 if possible. [5] Applicant is to place a check mark here if English language translation is attached.

INFORMATION DISCLOSURE STATEMENT BY APPLICANT (Not for submission under 37 CFR 1.99)		
	Application Number	16789722
	Filing Date	2020-02-13
	First Named Inventor	Mark J. Sarder et al.
	Art Unit	3747
	Examiner Name	Syed O. Hasan
	Attorney Docket Number	CET1090.075

CERTIFICATION STATEMENT

Please see 37 CFR 1.97 and 1.98 to make the appropriate selection(s):

That each item of information contained in the information disclosure statement was first cited in any communication from a foreign patent office in a counterpart foreign application not more than three months prior to the filing of the information disclosure statement. See 37 CFR 1.97(e)(1).

OR

☐ That no item of information contained in the information disclosure statement was cited in a communication from a foreign patent office in a counterpart foreign application, and, to the knowledge of the person signing the certification after making reasonable inquiry, no item of information contained in the information disclosure statement was known to any individual designated in 37 CFR 1.56(c) more than three months prior to the filing of the information disclosure statement. See 37 CFR 1.97(e)(2).

See attached certification statement.

The fee set forth in 37 CFR 1.17 (p) has been submitted herewith.

A certification statement is not submitted herewith.

SIGNATURE

A signature of the applicant or representative is required in accordance with CFR 1.33, 10.18. Please see CFR 1.4(d) for the form of the signature.

Signature	/Kevin R. Rosin/	Date (YYYY-MM-DD)	2020-12-15
Name/Print	Kevin R. Rosin	Registration Number	55584

This collection of information is required by 37 CFR 1.97 and 1.98. The information is required to obtain or retain a benefit by the public which is to file (and by the USPTO to process) an application. Confidentiality is governed by 35 U.S.C. 122 and 37 CFR 1.14. This collection is estimated to take 1 hour to complete, including gathering, preparing and submitting the completed application form to the USPTO. Time will vary depending upon the individual case. Any comments on the amount of time you require to complete this form and/or suggestions for reducing this burden, should be sent to the Chief Information Officer, U.S. Patent and Trademark Office, U.S. Department of Commerce, P.O. Box 1450, Alexandria, VA 22313-1450. DO NOT SEND FEES OR COMPLETED FORMS TO THIS ADDRESS. **SEND TO: Commissioner for Patents, P.O. Box 1450, Alexandria, VA 22313-1450.**

Privacy Act Statement

The Privacy Act of 1974 (P.L. 93-579) requires that you be given certain information in connection with your submission of the attached form related to a patent application or patent. Accordingly, pursuant to the requirements of the Act, please be advised that: (1) the general authority for the collection of this information is 35 U.S.C. 2(b)(2); (2) furnishing of the information solicited is voluntary; and (3) the principal purpose for which the information is used by the U.S. Patent and Trademark Office is to process and/or examine your submission related to a patent application or patent. If you do not furnish the requested information, the U.S. Patent and Trademark Office may not be able to process and/or examine your submission, which may result in termination of proceedings or abandonment of the application or expiration of the patent.

The information provided by you in this form will be subject to the following routine uses:

1. The information on this form will be treated confidentially to the extent allowed under the Freedom of Information Act (5 U.S.C. 552) and the Privacy Act (5 U.S.C. 552a). Records from this system of records may be disclosed to the Department of Justice to determine whether the Freedom of Information Act requires disclosure of these record s.

2. A record from this system of records may be disclosed, as a routine use, in the course of presenting evidence to a court, magistrate, or administrative tribunal, including disclosures to opposing counsel in the course of settlement negotiations.

3. A record in this system of records may be disclosed, as a routine use, to a Member of Congress submitting a request involving an individual, to whom the record pertains, when the individual has requested assistance from the Member with respect to the subject matter of the record.

4. A record in this system of records may be disclosed, as a routine use, to a contractor of the Agency having need for the information in order to perform a contract. Recipients of information shall be required to comply with the requirements of the Privacy Act of 1974, as amended, pursuant to 5 U.S.C. 552a(m).

5. A record related to an International Application filed under the Patent Cooperation Treaty in this system of records may be disclosed, as a routine use, to the International Bureau of the World Intellectual Property Organization, pursuant to the Patent Cooperation Treaty.

6. A record in this system of records may be disclosed, as a routine use, to another federal agency for purposes of National Security review (35 U.S.C. 181) and for review pursuant to the Atomic Energy Act (42 U.S.C. 218(c)).

7. A record from this system of records may be disclosed, as a routine use, to the Administrator, General Services, or his/her designee, during an inspection of records conducted by GSA as part of that agency's responsibility to recommend improvements in records management practices and programs, under authority of 44 U.S.C. 2904 and 2906. Such disclosure shall be made in accordance with the GSA regulations governing inspection of records for this purpose, and any other relevant (i.e., GSA or Commerce) directive. Such disclosure shall not be used to make determinations about individuals.

8. A record from this system of records may be disclosed, as a routine use, to the public after either publication of the application pursuant to 35 U.S.C. 122(b) or issuance of a patent pursuant to 35 U.S.C. 151. Further, a record may be disclosed, subject to the limitations of 37 CFR 1.14, as a routine use, to the public if the record was filed in an application which became abandoned or in which the proceedings were terminated and which application is referenced by either a published application, an application open to public inspections or an issued patent.

9. A record from this system of records may be disclosed, as a routine use, to a Federal, State, or local law enforcement agency, if the USPTO becomes aware of a violation or potential violation of law or regulation.

Espacenet

Bibliographic data: GB532903 (A) — 1941-02-03

Improvements relating to fuel control mechanism for internal combustion engines using alternative fuels

Inventor(s):

Applicant(s): ALEXANDER HENDERSON; FREDERICK ERNEST REBECK ± (ALEXANDER HENDERSON, ; FREDERICK ERNEST REBECK)

Classification: **- international:** ***F02D19/08; F02D19/10***
- cooperative: F02D19/0607 (EP); F02D19/0684 (EP); F02D19/08 (EP); F02D19/10 (EP); Y02T10/30 (EP)

Application number: GB19390026528 19390923

Priority number(s): GB19390026528 19390923

Abstract of GB532903 (A)

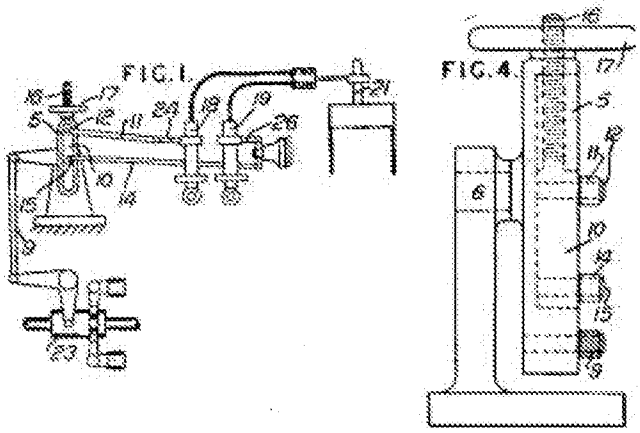

532,903. Regulating. HENDERSON, A., and REBBECK, F. E. Sept; 23, 1939, No. 26528. [Class 7 (vi)] The alternative supply of two fuels to an engine is regulated by means of a link 5 pivoted at 6 and in which slides a block 10 connected at 12, 15 to rods 11, 14 leading to the regulating- means of the two fuels, the block being adjustable along the link to vary the proportions of the two fuels. As shown in Fig; 1, the rods 11, 14 actuate the controlling-rods 24, 26 of two fuel pumps 18, 19 supplying an injector 21 or separate injectors ; but one of the fuel pumps may be replaced by a throttle valve in a pipe supplying gaseous fuel to the engine. The block 10 is adjusted by means of a screw 16 and hand-wheel 17, and is arranged so that when the block is at one end of the link 5 one of the rods 11 and 14 is inoperative, and when the block is at the other end of the link the other rod is inoperative ; in intermediate positions, both rods operate to adjust the supplies of both fuels. The link 5 may be connected by a link 9 to a hand control; or to an automatic regulator such as a speed governor 23. If one fuel is to be ignited by spark ignition, this may be automatically brought into operation when the block 10 is moved to its extreme position for supplying the fuel.

RESERVE COPY

PATENT SPECIFICATION

532,903

Application Date: Sept. 23, 1939. No. 26528/39.

Complete Specification Accepted: Feb. 3, 1941.

COMPLETE SPECIFICATION

Improvements relating to Fuel Control Mechanism for Internal Combustion Engines using Alternative Fuels

We, ALEXANDER HENDERSON, of 133, Marlborough Avenue, Broomhill, Glasgow, W.1, and FREDERICK ERNEST REBBECK, of Harland and Wolff, Limited, Queen's Island, Belfast, both British Subjects, do hereby declare the nature of this invention and in what manner the same is to be performed, to be particularly described and ascertained in and by the following statement:—

This invention relates to improved mechanism for controlling the supply of fuel to the cylinders of internal combustion engines constructed for use with alternative fuels, which may be different liquid fuels, or liquid fuel and gaseous fuel, or liquid fuel and a mixture of liquid and gaseous fuel, such as, for example, compression - ignition internal combustion engines adapted to use alternative liquid fuels, or adapted for the alternative use of liquid fuel and gaseous fuel, with or without admixture of the gaseous fuel with liquid fuel to assist combustion.

The invention is concerned with an engine according to the preceding paragraph provided with two fuel supply devices, one for supplying one fuel and the other for separately supplying another fuel to the engine cylinder or cylinders, each fuel supply device being controlled by transmission members connected to a slide element slidable on an oscillatory link or like member adapted to be oscillated about a fixed pivotal axis, the amplitude of oscillation being variable to vary the movement of said transmission members and thus to vary the amount of fuel supplied to the engine without varying the proportions of the fuels, and the slide element being manually adjustable on the link to move one transmission member relatively to the other, thereby to vary the proportions of the fuels supplied by the two fuel supply devices. An engine conforming to the preceding statement is hereinafter referred to as an engine "of the character described".

Such mechanism enables the change of fuel to be effected without stopping the engine and also provides for the control of the supply of both fuels at all times. It further provides a means whereby the amount of the charge of fuel supplied to the engine can be regulated either automatically by the engine speed governor or by actuation of a fuel supply regulator, while further providing control means for the control of the relative proportions of the two fuels when a mixture of fuels is supplied to the engine.

Heretofore an engine of the character described had the two transmission members connected one to each pump plunger of a pair of fuel pumps and the link carrying the adjustable slide element was oscillated by articulating it to the end of an eccentric rod reciprocated by an eccentric on a shaft driven by the engine; consequently a continuous oscillatory movement of constant amplitude was imparted to the link during the running of the engine, thus continuously reciprocating either or both of the transmission members and pump plungers to supply fuel to the engine; in order to vary the total amount of fuel supplied to the engine, the amplitude of oscillation of the link could be varied by varying the point of articulation of the link to the engine-driven eccentric rod either by hand or by means of a governor, without varying the proportions of the fuels supplied by the two pumps. To vary the proportions of the fuels, the strokes of the transmission members were varied relatively to one another by adjusting the slide element on the link in order to vary the pump strokes; alternatively, the transmission members were arranged to control by-pass passages in the pumps in order to vary the effective action of the pumps.

According to the present invention an engine of the character described has the oscillatory link or like member oscillated only by the movement of a regulating member and only when the latter is actuated by hand or by an engine speed governor or by a mechanically or electrically-controlled engine regulator, so that the oscillatory link or like member and the transmission members remain stationary at any constant engine speed. The invention is further characterized by the feature that the fuel supply is effected

[Pric

either through independently driven fuel pumps or through fuel supply pipes controlled by valves, the supply of fuel through said pumps or valves being varied by any movement of the said transmission members. If the engine is adapted for using liquid fuel and gaseous fuel alternatively, one of the transmission members will be operatively connected to the liquid fuel pump or other means for controlling the liquid fuel supply to the engine and the other transmission member will be operatively connected to the means for controlling the gaseous fuel supply to the engine.

The invention will be more clearly understood by reference to the accompanying drawings whereon Fig. 1 is a diagrammatic illustration of the application of one form of the invention to the control of alternative liquid fuel supplies to the fuel injection nozzle of an engine cylinder. Fig. 2 is a similarly diagrammatic illustration of another form of the invention for the control of alternative liquid and gaseous fuel supplies to an engine cylinder. Figs. 3 and 4 are views taken at right angles to one another showing a slightly modified form of linkage to a larger scale than Figs. 1 and 2.

Referring firstly to Figs. 3 and 4, the linkage there shown comprises a slotted link 5 at the back of which is a pin 6 for pivotally mounting the link 5 on a fixed bracket 7. The link 5 is pivotally attached at 8 to one end of an actuating rod 9. Slidable in the slot in the link 5 is a slide block 10. A rod 11 is attached by a pivot pin 12 to one end of the block 10 and a similar rod 14 is attached by a pivot pin 15 to the other end of the block, which is of such a length that, when the block is at either end of the slot in the link 5, one or other of the pivot pins 12 and 15 is in a neutral position on the link and is coaxial with the axis of the pin 6, which is the axis about which the link 5 is free to swivel on the bracket 7. The slide block 10 is attached to a screw-threaded spindle 16 upon which is fitted an internally screw-threaded hand wheel 17. It will be apparent that the hand wheel 17 serves to adjust the slide block in the link.

With the slide block in its lower extreme position shown in Figs. 3 and 4, any longitudinal movement of the actuating rod 9 will result in corresponding movement of the rod 14, but the rod 11 will remain motionless, since the pivot pin 12 is coaxial with the axis about which the link 5 is adapted to swivel. If the slide block 10 is moved upwards and locked in its other extreme position by rotation of the hand wheel 17 until the latter again abuts against the upper end of the link 5, the pivot pin 15 will be brought into the position in which it is coaxial with the axis about which the link swings; in this position, longitudinal movement of the actuating rod 9 will transmit no movement to the rod 14, while the rod 11 will move with the rod 9.

If the slide block 10 is moved to a position between the two extreme positions above-mentioned, the rod 9 will transmit motion to both rods 11 and 14 and the displacement of the rods 11 and 14 will depend upon the distances of their pivot pins 12 and 15 from the axis of swing of the link 5.

Fig. 1 of the drawings shows a somewhat similar linkage for controlling either or both of two alternative liquid fuels supplied by separate fuel pumps 18 and 19 through a non-return valve chest 20 to a fuel injection nozzle 21 arranged to inject fuel into the combustion space 22 of an internal combustion engine cylinder. In Fig. 1 the link 5, instead of being directly attached to an actuating rod 9 as in Figs. 1 and 2, has a lateral arm 5*a* to which the actuating rod 9 is attached and the latter is pivotally attached at its other end to and controlled by any known type of centrifugal engine speed governor 23. The rod 11 of the linkage is attached to a pump control rod 24 which controls the pump 18, and the rod 14 of the linkage is connected through the medium of a rocking arm 25 to a pump control rod 26 which controls the pump 19. The fuel-injection pumps 18 and 19 are driven in known manner from the engine, as by means of engine-driven cams 27.

Displacement of the governor 23, due to engine speed variation, will transmit motion through the rod 9 to the link 5 and from thence to either or both of the rods 11 and 14 according to the position of the slide block 10 in the link 5, and will thus control either or both of the liquid fuel pumps 18 and 19 to control the liquid fuel supply to the engine. In either extreme position of the slide block 10, one or other of the rods 11 and 14 will remain motionless, so that the fuel pump 18 or 19 to which it is connected will either supply no fuel to the valve chest 20 or only a predetermined minimum quantity, while the other rod 11 or 14 will be fully responsive to any movements of the rod 9 and will thus control the fuel pump supplying the whole or main fuel charge to the injection nozzle 21. In any intermediate position of the slide block 10, both rods 11 and 14 will move with the rod 9 and thus control the supply of fuel by both fuel pumps 18 and 19.

The fuel pumps 18 and 19 may supply fuel to two separate fuel injection nozzles

in place of the single fuel nozzle 21.

Instead of operatively connecting the link 5 to an engine speed governor as in Fig. 1, the link 5 may be connected to any known form of hand regulator lever or to a mechanically or electrically controlled regulator. Fig. 2 shows the arm 5*a* of the link 5 connected by the rod 9 to a hand regulator lever 28; in this case the linkage is turned through 90 degrees so that the screw-threaded spindle 16 is horizontal instead of being vertical as in Figs. 1, 3 and 4. Fig. 2 also illustrates the invention applied to an engine adapted to use either liquid or gaseous fuel or both. In this case, the rod 11 of the linkage is connected to an arm 29 on the spindle of a throttle valve 30 in a gas supply pipe 31 which opens through a mixing chamber 32 and inlet valve 33 into the combustion space 22 of the engine cylinder, air for combustion being supplied to the mixing chamber 32 through an air inlet pipe 34. The rod 14 of the linkage is connected through a bell-crank lever 35 to a pump control rod 36 which controls an engine-driven liquid fuel pump 37 supplying liquid fuel to a fuel injection nozzle 38 arranged to inject liquid fuel into the engine cylinder.

In either of the arrangements shown in Figs. 1 and 2, displacement of the sliding block 10 can be effected by turning the hand wheel 17 without stopping the engine; it is thus possible to change over from one fuel to the other while the engine is running. Moreover, the supply of either or both fuels may be at all times under the control of the engine speed governor, if the linkage is governor-controlled, so that the total quantity of fuel supplied is automatically kept within predetermined limits by the action of the governor. Similarly, if the linkage is connected to an engine regulator, other than an automatic speed governor, the supply of either or both fuels will be under the control of the engine regulator and the total quantity of fuel supplied can be controlled by actuating the engine regulator by hand or by mechanical or electrical means. When the engine is running on a mixture of two fuels, the relative proportions of the two fuels can be manually controlled by turning the hand wheel 17 to adjust the position of the slide block 10.

It is to be understood that the screw-threaded spindle 16 and hand wheel 17 are given only as an example of a convenient means of adjusting the slide block 10, and that any other means of adjusting the slide block may be provided.

If it is desirable for one fuel to be ignited by electrical spark ignition, the slide block 10 may be arranged so that, when it is moved to its extreme position in which the fuel supplied requires electrical spark ignition, the slide block 10 will cause electrical spark ignition apparatus to come into operation, e.g. the slide block may actuate an electrical contact to complete an electrical ignition actuating circuit.

Having now particularly described and ascertained the nature of our said invention and in what manner the same is to be performed, we declare that what we claim is:—

1. An internal combustion engine of the character described wherein the oscillatory link or like member is oscillated only by the movement of a regulating member and only when the latter is actuated by hand or by an engine speed governor or by a mechanically or electrically-controlled engine regulator, so that the oscillatory member and the transmission members remain stationary at any constant engine speed.

2. An engine as claimed in claim 1 in which the fuel supply is effected through independently driven fuel pumps or fuel supply pipes controlled by valves and the supply of fuel through said pumps or valves is varied by any movement of the transmission members.

3. An internal combustion engine according to claim 1 or 2 wherein the link or equivalent member oscillates about a fixed pivotal axis situated in the length of the link member, and the slide element is such that, in either extreme position, one of its pivotal connections to the transmission members is in a neutral position coinciding with the said pivotal axis.

4. An internal combustion engine according to claim 3 wherein the slide element is adjustable by means of a hand wheel and a screw-threaded rod, substantially as described.

5. In an internal combustion engine using alternative fuels, fuel control mechanism arranged and operating substantially as herein described with reference to the accompanying drawings.

Dated this 22nd day of September, 1939.

JOHNSONS,
Chartered Patent Agents,
41, St. Vincent Place, Glasgow, C.1, and
10, Stafford Street, Edinburgh, 3.

Leamington Spa: Printed for His Majesty's Stationery Office, by the Courier Press.—1941.

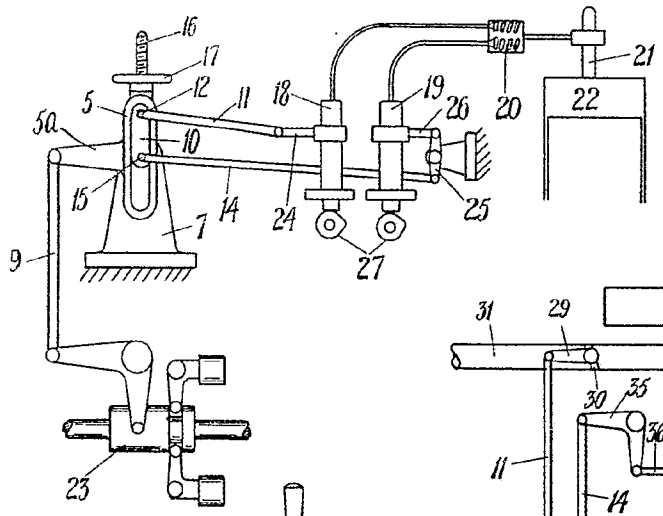

FIG. 1.

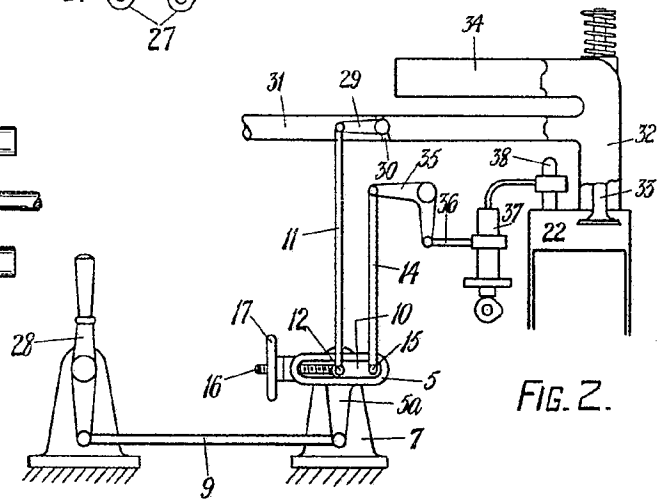

FIG. 2.

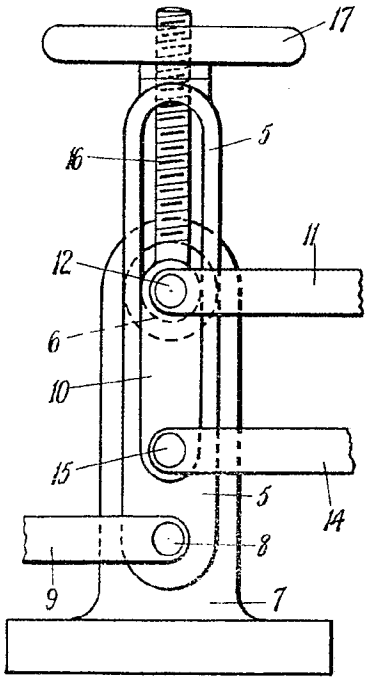

FIG. 3.

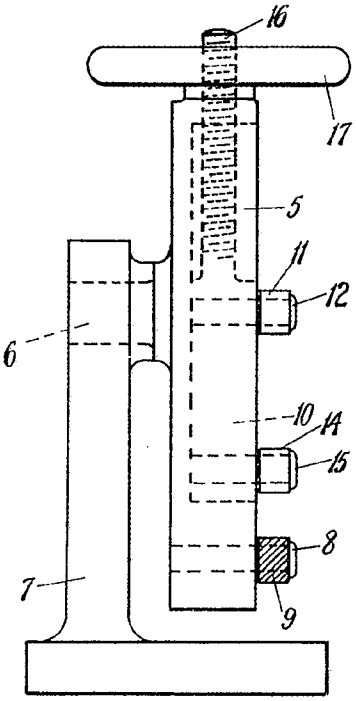

FIG. 4.

[This Drawing is a reproduction of the Original on a reduced scale.]

Malby & Sons, Photo-Lith.

Espacenet

Bibliographic data: CN2401704 (Y) — 2000-10-18

Gas power booster for dual-fuel gasoline engine

Inventor(s): XIA LAIQING [CN]; XIONG SHUSHENG [CN]; WANG JUNPEI [CN] ± (LAIQING XIA, ; SHUSHENG XIONG, ; JUNPEI WANG)

Applicant(s): UNIV ZHEJIANG [CN] ± (ZHEJIANG UNIV)

Classification: **- international:** ***F02M43/00;*** (IPC1-7): F02M43/00
- cooperative:

Application number: CN19992050994U 19991123

Priority number(s): CN19992050994U 19991123

Abstract of CN2401704 (Y)

The utility model discloses a gas power booster for a double-fuel gasoline engine. A gasoline cut-off electromagnetic valve of the original double-fuel engine is connected in parallel with an electromagnetic valve for controlling the flow quantity of gasoline, and meanwhile, a throttle valve of a carburetor of the original engine is provided with a travel switch, wherein the on-off of the travel switch is automatically controlled by the opening degree of the throttle valve of the carburetor, and the travel switch is used for controlling to open and close the electromagnetic valve. The utility model has the advantages that the structure is simple and reliable, the power of the double-fuel gasoline engine when in the combustion of gas can be close to or even reach the level when in the combustion of fuel by using the gas power booster, and the good exhaust performance and the economic performance index of the engine when in the combustion of gas can not be affected.

[19]中华人民共和国国家知识产权局

[51]Int. Cl[7]
F02M 43/00

[12]实用新型专利说明书

[21] ZL 专利号 99250994.7

[45]授权公告日 2000 年 10 月 18 日

[11]授权公告号 CN 2401704Y

[22]申请日 1999.11.23 [24]颁证日 2000.8.12

[21]申请号 99250994.7

[73]专利权人 浙江大学
地址 310027 浙江省杭州市玉古路 20 号

[72]设计人 夏来庆 熊树生 汪均培 魏建勤
金 晖 陈 勇 谢瑞燕

[74]专利代理机构 浙江大学专利代理事务所
代理人 张法高

权利要求书 1 页 说明书 2 页 附图页数 1 页

[54]实用新型名称 双燃料汽油发动机燃气动力提高装置

[57]摘要

本实用新型公开了一种双燃料汽油发动机燃气动力提高装置。它在原双燃料发 动机汽油截断电磁阀上，并联一个控制汽油流量的电磁阀，同时在原发动机化 油器节气门上，设置一个通断由化油器节气门的开度自动控制的，并用来控制 电磁阀启闭的行程开关。本实用新型的优点：结构简便可靠，使用它能使双燃 料发动机燃气时的动力接近，甚至达到燃油时的水平，而不影响发动机燃气时 的良好排放性能及经济性能指标。

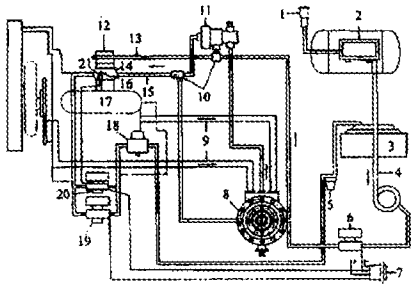

ISSN 1008-4274

知识产权出版社出版

权 利 要 求 书

1．一种双燃料汽油发动机燃气动力提高装置，其特征在于在原双燃料发动机汽油截断电磁阀[19]上，并联一个控制汽油流量的电磁阀[20]，同时在原发动机化油器[14]节气门[16]上，设置一个通断由化油器节气门的开度自动控制的，并用来控制电磁阀启闭的行程开关[21]。

2．根据权利要求 1 所述的一种双燃料汽油发动机燃气动力提高装置，其特征在于控制汽油流量的电磁阀[20]，其负极接到行程开关的活动端上，正极与电磁阀[6]的正极相连。

3．根据权利要求 1 或 2 所述的一种双燃料汽油发动机燃气动力提高装置，其特征在于所说的行程开关[21]为柱塞型行程开关，该开关的活动端与控制汽油流量的电磁阀[20]的负极相连，固定端搭铁。

说 明 书

双燃料汽油发动机燃气动力提高装置

本实用新型涉及一种双燃料汽油发动机燃气动力提高装置。

如图所示，原双燃料供给系统有一汽油—LPG（或 CNG）转换开关 7，当发动机燃用气体燃料时，汽油电磁阀 19 关闭，所有的气体燃料电磁阀打开。利用 LPG 容器内的压力压出液态的石油气，通过过滤器滤除杂质，经过电磁阀 6 进入减压阀 8，在此减压、气化、调压（对 CNG 需要经过三级减压）后，成为具有一定压力的气体燃料，在混合器 12 里和空气混合后进入发动机燃烧室。

现在普遍使用的 LPG（或 CNG）—汽油双燃料发动机供气系统，使得发动机在燃用气体燃料时，动力下降显著，大大影响双燃料发动机汽车的行驶性能。共主要原因是：气体燃料比汽油要占据的体积大，相同发动机排量下，影响发动机的充量，以及气体燃料的体积热值低，燃烧速度慢等。

本实用新型的目的是提供一种结构简便可靠，使用它能使双燃料发动机燃气时的动力接近，甚至达到燃油时水平的双燃料汽油发动机燃气动力提高装置。

为了达到上述目的，本实用新型采取下列措施：

在原双燃料发动机汽油截断电磁阀上，并联一个控制汽油流量的电磁阀，同时在原发动机化油器节气门上，设置一个通断由化油器节气门的开度自动控制的，并用来控制电磁阀启闭的行程开关。

本实用新型的优点：结构简便可靠，使用它能使双燃料发动机燃气时的动力接近，甚至达到燃油时的水平，而不影响发动机燃气时的良好排放性能及经济性能指标。

下面结合附图作详细说明：

附图是车用双燃料供给装置结构示意图。

图中，加气口 1、组合阀 2、汽油箱 3、高压铜管 4、汽油滤清器 5、LPG 或 CNG 电磁阀 6、LPG/汽油转换开关 7、减压阀 8、水箱水管 9、三通 10、怠速器 11、混合器 12、燃气软管 13、化油器 14、真空管 15、节气门 16、发动机 17、汽油泵 18、汽油电磁阀 19、控制汽油流量电磁阀 20、栓塞型行程开关 21。

双燃料汽油发动机燃气动力提高装置，它在原双燃料发动机汽油截断电磁阀 19 上，并联一个控制汽油流量的电磁阀 20，同时在原发动机化油器 14 节气门 16 上，设置一个通断由化油器节气门的开度自动控制的，并用来控制电磁

Champion - EX2109, Page 328 of 403
Generac Power Systems, Inc. et al v. Champion Power Equip., Inc.
IPR2025-01438

阀启闭的行程开关 21。控制汽油流量的电磁阀 20，其负极接到行程开关的活动端上，正极与电磁阀 6 的正极相连。行程开关 21 为柱塞型行程开关，该开关的活动端与控制汽油流量的电磁阀 20 的负极相连，固定端搭铁。

当发动机燃用气体燃料时，汽油电磁阀 19 关闭，所有的气体燃料电磁阀打开。利用 LPG 容器内的压力压出液态的石油气，通过过滤器滤除杂质，经过电磁阀 6 进入减压阀 8，在此减压、气化、调压（对 CNG 需要经过三级减压）后，成为具有一定压力的气体燃料，在混合器 12 里和空气混合后进入发动机燃烧室。本实用新型在汽油电磁阀 19 上并联一个常闭的控制汽油流量电磁阀 20，使得发动机在高速或大负荷时，可以有一小部分特定时的汽油通过该电磁阀，经化油器 14，进入发动机 17，实现两种燃料联供、燃气掺烧汽的目的，从而大大提高发动机燃气时的动力。而低负荷和怠速时，通过设置在化油器 14 上的一个行程开关 21，及时将这一小部分特定量的汽油切断。该行程开关的活动端与控制汽油流量电磁阀 20 的负极相连，固定端搭铁。行程开关的通断完全由节气门 16 控制。当节气门 16 开度变小到一定程度，即发动机过渡到低负荷或怠速时，触及行程开关的柱塞，使行程开关断开，控制汽油流量电磁阀 20 断电，额外汽油的供给切断，发动机 17 处于完全燃气状态；而高转速或大负荷时，节气门 16 开度变大，行程开关 21 自动导通，控制汽油流量电磁阀 20 通电导通，一小部分特定流量的汽油便通过该电磁阀进入发动机与燃气共烧，从而大大提高发动机的动力。

当发动机工作在燃油状态时，LPG（或 CNG）电磁阀 6 的正极没有电压，而控制汽油流量电磁阀 20 的正极是与 LPG（或 CNG）电磁阀 6 的正极相连的，所以控制汽油流量电磁阀 20 上也没有电流输入，不管节气门 16 上的特种行程开关 21 如何动作，控制汽油流量电磁阀 20 都不导通，这与原供给系统燃油时状况完全一致，对发动机燃油时的性能不会产生任何影响。

Champion - EX2109, Page 329 of 403
Generac Power Systems, Inc. et al v. Champion Power Equip., Inc.
IPR2025-01438

说 明 书 附 图

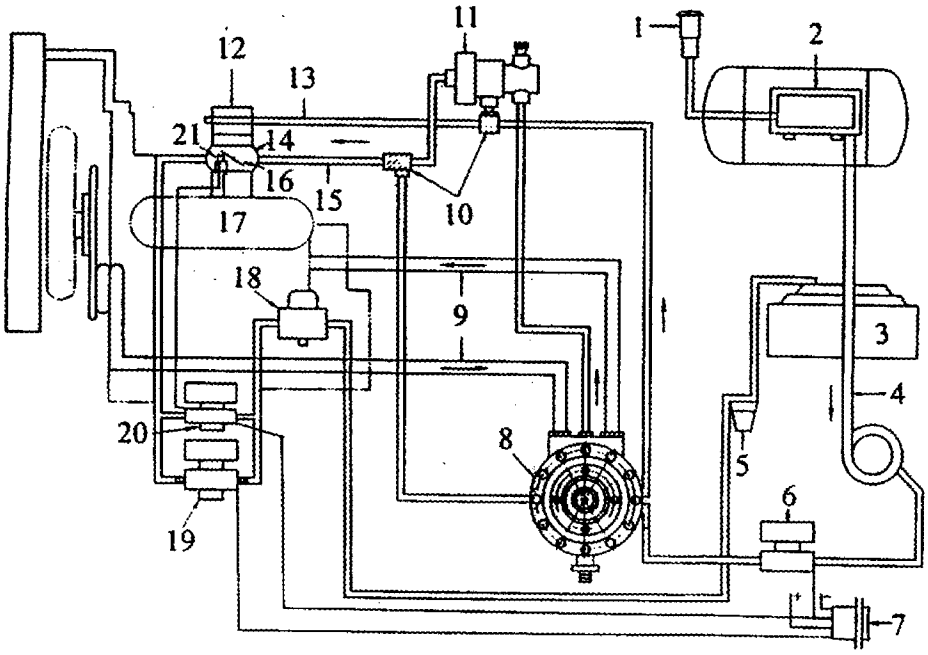

UNITED STATES
PATENT AND TRADEMARK OFFICE

P.O. Box 1450
Alexandria, VA 22313 - 1450
www.uspto.gov

ELECTRONIC ACKNOWLEDGEMENT RECEIPT

APPLICATION #	RECEIPT DATE / TIME	ATTORNEY DOCKET #
16/789,722	**12/15/2020 11:53:34 AM ET**	**CET1090.075**

Title of Invention

DUAL FUEL SELECTOR SWITCH

Application Information

APPLICATION TYPE	Utility - Nonprovisional Application under 35 USC 111(a)	PATENT #	-
CONFIRMATION #	9989	FILED BY	Robyn Templin
PATENT CENTER #	60119792	FILING DATE	02/13/2020
CUSTOMER #	26629	FIRST NAMED INVENTOR	Mark J. Sarder
CORRESPONDENCE ADDRESS	-	AUTHORIZED BY	Kevin Rosin

Documents

TOTAL DOCUMENTS: 12

DOCUMENT	PAGES	DESCRIPTION	SIZE (KB)
2020.12.15 Supp IDS.pdf	6	Information Disclosure Statement (IDS) Form (SB08)	984 KB
FPD1-CN2401704Y.pdf	6	Foreign Reference	1808 KB
FPD2-DE102006008524A1.pdf	16	Foreign Reference	2597 KB
FPD3-GB189800A.pdf	4	Foreign Reference	690 KB
FPD4-GB532903A.pdf	5	Foreign Reference	1211 KB
NPL1-Multi-Power MODELMP5500DF 13 HP	38	Non Patent Literature	23502 KB

Generator Owner's Manual.pdf			
NPL2-Winco Home Power TRI-FUEL Portable Generators Owners Manual.pdf	16	Non Patent Literature	730 KB
NPL3-Winco HPS9000VEE and HPS9000VE-03A Manual.pdf	16	Non Patent Literature	1961 KB
NPL4-Winco Dyna ME5000VA.pdf	12	Non Patent Literature	118 KB
NPL5-Dyna Portable Generators.pdf	12	Non Patent Literature	104 KB
NPL6-PowerLand Tri Fuel Generator Owner's Manual.pdf	41	Non Patent Literature	7016 KB
NPL7-Winco HPS6000HEI Manual.pdf	20	Non Patent Literature	8337 KB

Digest

DOCUMENT	MESSAGE DIGEST(SHA-512)
2020.12.15 Supp IDS.pdf	CAC2E7EE8E984D40E41FDF312ABB53DF87C3F0C85B9E1138C2BAFD9349B73F749ECB549B70B17E939A8EFFD108242910E8D701C7F80AD63942E408ABB7D82100
FPD1-CN2401704Y.pdf	9E7FD34D9F0717DB00E730AB4CA8CB31247449C7F7C2705B685731988D741C78B5C28A534D25B01F69B98406DF1AA2E6B039BAB3FA3CA42FE5ABA9DC28A01F1F
FPD2-DE102006008524A1.pdf	D8A935A423C41DA2A51CEADEE13D0ED5756A47BAC325F398

	A8B0BCD52B06F8EB284E2A2C553F353E1EC7F554D669E9EF0DA7FF6BD693A5431BE2518B5117423E
FPD3-GB189800A.pdf	39A35F059CAA7D96BC937E8BBF96A96AF763309D68C42135F77388FE803CF5144660C5CBEBBBA907ECE72DE9DFCC2C696D64E90594E59EFAA9AF39B92AB69A3F
FPD4-GB532903A.pdf	06D1BEDB72364E8A970A3F3637F07A17EE54C8CBC852D59F70193DE3F6FFE72456F918C8C32AC1A12387545B9788127BC3FE8A293622C306CAB2BBB424DC6823
NPL1-Multi-Power MODELMP5500DF 13 HP Generator Owner's Manual.pdf	19927D91AF1E70EE0A256411F51C8CFD3D7C65FE96D0032BE42914FEC82F2C30D2345D659E89C4967D60BD1B6C26A32964186CC99AE49149BCEC6EDB1C8F173E
NPL2-Winco Home Power TRI-FUEL Portable Generators Owners Manual.pdf	070AE1DA8046DC2AAC8078EC08E20444A5EECCE22F59B6034B1D8D398EBA1961940D04C200BF19197D57609202030 9F62BF8FCB9DA878742553B322C1FDB8B0A
NPL3-Winco HPS9000VEE and HPS9000VE-03A Manual.pdf	BAE4D902E0B325CCB1879F1ED0380AB272BBB496B4EB2B8B3E7AA784C5D626D71923A344FB6D99DDA4F025EF919C2715C1FB16FF38C71E697D0C45A059963889
NPL4-Winco Dyna ME5000VA.pdf	A28406FA1D740D0C404BDFB26D8B53DF7C670B37881C05F68715FDF2882650E94C6662D75EB05F70CD05901128AC53A61EE116D4DEEFF64CF4FA30FD11A89F97
NPL5-Dyna Portable Generators.pdf	AE368FA7D80F9CD099493863F4DDB2F03FF5D15884D65947E5A483CC9665F8416314728C87380F2D9C13AD4910E6325EFE624E21E34391F8529F8C42563318E4
NPL6-PowerLand Tri Fuel Generator Owner's Manual.pdf	3D8EE26567FAC6434284C0D9FB71B0F6E836878D796129F7D8522B905392A26E9953696CE5EA1E28D87E7A7D205419670CC34525981F9A5D83A5B003D083AB14
NPL7-Winco HPS6000HEI Manual.pdf	5FE786387E1DFBE53CE6CEE007DA0728AF9C967A3CF6B4C8728C4EB7CD935482CC1B3E1C1BACE9C6D775FBED15031F68B81041D1585BE50270C3160688436EA0

by the applicant, and including page counts, where applicable. It serves as evidence of receipt similar to a Post Card, as described in MPEP 503.

New Applications Under 35 U.S.C. 111

If a new application is being filed and the application includes the necessary components for filing date (see 37 CFR 1.53(b)-(d) and MPEP 506), a Filing Receipt (37 CFR 1.54) will be issued in due course and the date shown on this Acknowledgement Receipt will establish the filing date of the application

National Stage of an International Application under 35 U.S.C. 371

If a timely submission to enter the national stage of an international application is compliant with the conditions of 35 U.S.C. 371 and other applicable requirements a Form PCT/DO/EO/903 indicating acceptance of the application as a national stage submission under 35 U.S.C. 371 will be issued in addition to the Filing Receipt, in due course.

New International Application Filed with the USPTO as a Receiving Office

If a new international application is being filed and the international application includes the necessary components for an international filing date (see PCT Article 11 and MPEP 1810), a Notification of the International Application Number and of the International Filing Date (Form PCT/RO/105) will be issued in due course, subject to prescriptions concerning national security, and the date shown on this Acknowledgement Receipt will establish the international filing date of the application.

Espacenet

Bibliographic data: DE102006008524 (A1) — 2006-08-31

Multi-way valve arrangement for use as fuel tank-change-over-valve, has valve device including two multi-way partial valves, which are symmetrical and co-operating with one another, where partial valves are designed as gate valves

Inventor(s): HAGEN HARALD [DE]; HASBERG MARKUS [DE]; SUHR ANDREAS [DE] ± (HAGEN, HARALD, ; HASBERG, MARKUS, ; SUHR, ANDREAS, ; Hagen, Harald, ; Hasberg, Markus, ; Suhr, Andreas)

Applicant(s): VOSS AUTOMOTIVE GMBH [DE] ± (VOSS AUTOMOTIVE GMBH, ; VOSS Automotive GmbH)

Classification: **- international:** *F16K11/22*
- cooperative: F16K11/07 (EP); F16K11/22 (EP)

Application number: DE20061008524 20060222

Priority number(s): DE20052002909U 20050222 ; DE20061008524 20060222

Also published as: DE102006008524 (B4)

Abstract of DE102006008524 (A1)

The arrangement has valve device provided such that supply-tank connections (A1, B1) are alternatively connected with supply-engine connection (M1) and return-tank connections (A2, B2) are alternatively connected with return-engine connection (M2). The valve device includes a two multi-way partial valves (V1, V2), which are symmetrical and co-operating with one another. The partial valves are designed as gate valves.

(19) Bundesrepublik Deutschland
Deutsches Patent- und Markenamt

(10) **DE 10 2006 008 524 A1** 2006.08.31

(12) # Offenlegungsschrift

(21) Aktenzeichen: **10 2006 008 524.8**
(22) Anmeldetag: **22.02.2006**
(43) Offenlegungstag: **31.08.2006**

(51) Int Cl.[8]: ***F16K 11/22*** (2006.01)

(66) Innere Priorität:
20 2005 002 909.2 22.02.2005

(71) Anmelder:
VOSS Automotive GmbH, 51688 Wipperfürth, DE

(74) Vertreter:
Patentanwälte Dr. Solf & Zapf, 42103 Wuppertal

(72) Erinder:
Hagen, Harald, 51688 Wipperfürth, DE; Hasberg, Markus, 51688 Wipperfürth, DE; Suhr, Andreas, 50823 Köln, DE

Die folgenden Angaben sind den vom Anmelder eingereichten Unterlagen entnommen

(54) Bezeichnung: **Mehrwege-Ventilanordnung**

(57) Zusammenfassung: Die Erfindung betrifft eine Mehrwege-Ventilanordnung (1) zur Verwendung als Kraftstofftank-Umschaltventil zwischen mindestens zwei Kraftstofftanks (A, B) und einem Motor (M) in einem Kraftfahrzeug, mit mindestens zweimal zwei Tankanschlüssen (A1, A2; B1, B2) jeweils für Vorlauf und Rücklauf und zwei Motoranschlüssen (M1, M2) für Vorlauf und Rücklauf sowie mit einer Ventileinrichtung, derart, dass die Vorlauf-Tankanschlüsse (A1, B1) alternativ oder gemeinsam mit dem Vorlauf-Motoranschluss (M1) und die Rücklauf-Tankanschlüsse (A2, B2) alternativ oder gemeinsam mit dem Rücklauf-Motoranschluss (M2) verbindbar sind. Die Ventileinrichtung besteht aus mindestens zwei zusammenwirkenden, schalttechnisch symmetrischen Mehrwege-Teilventilen (V1, V2), insbesondere 4/2-Wege-Ventilen, die insbesondere als zusammenwirkende Schieberventile (14, 16) ausgebildet sind.

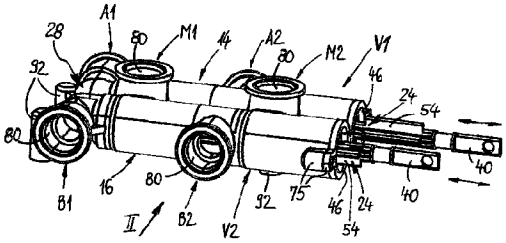

Beschreibung

[0001] Die vorliegende Erfindung betrifft eine Mehrwege-Ventilanordnung zur Verwendung als Kraftstofftank-Umschaltventil zwischen zwei Kraftstofftanks und einem Motor in einem Kraftfahrzeug, mit zweimal zwei Tankanschlüssen jeweils für Vorlauf und Rücklauf und zwei Motoranschlüssen für Vorlauf und Rücklauf sowie mit einer Ventileinrichtung derart, dass die Vorlauf-Tankanschlüsse alternativ oder gemeinsam mit dem Vorlauf-Motoranschluss und die Rücklauf-Tankanschlüsse alternativ oder gemeinsam mit dem Rücklauf-Motoranschluss verbindbar sind.

Stand der Technik

[0002] In bestimmten Regionen der Erde, beispielsweise in den U.S.A., werden im Fernverkehr mit Lastkraftwagen große Strecken zwischen Gebieten mit hohen Durchschnittstemperaturen und Gebieten mit sehr niedrigen Temperaturen zurückgelegt. Da LKW's üblicherweise mit Diesel-Kraftstoff betrieben werden, tritt dabei das Problem auf, dass "Normal-Diesel" bei etwa –15°C einfriert. Deshalb müssen Diesel-Fahrzeuge bei niedrigeren Temperaturen mit einem anderen, speziellen Kraftstoff betrieben werden, dem sogenannten "Arktic-Diesel", der auch bei Temperaturen bis –40°C noch flüssig bleibt. Arktic-Diesel ist allerdings um ca. 10 % bis 15 % teuerer als Normal-Diesel und verursacht zudem auch einen um etwa 10 % bis 15 % höheren Kraftstoff Verbrauch. Deshalb soll vermieden werden, das Fahrzeug nur, d. h. auch in wärmeren Regionen, mit Arktic-Diesel zu betreiben. Allerdings ist es nicht praktikabel und auch nicht rentabel, das gesamte Kraftstoffsystem mit Tanks) und Leitungen bei einem Wechsel zwischen warmen und kalten Regionen umzustellen, d. h. vollständig zu entleeren und neu zu befüllen.

[0003] Schwere LKW's sind heute üblicherweise mit (mindestens) zwei Kraftstofftanks ausgerüstet. Daraus ergibt sich die Möglichkeit, je nach Einsatzfall die Tanks mit gleicher oder unterschiedlicher Kraftstoffart zu betanken. Mit Hilfe einer Ventilanordnung der eingangs beschriebenen Art können dann die Tanks einzeln oder gemeinsam mit dem Motor verbunden werden.

[0004] Eine bekannte Ventilanordnung der genannten, gattungsgemäßen Art ist als Mehrfachventil aus Metall ausgebildet und besteht aus vielen miteinander verschraubten Einzelteilen, und zwar aus vier 2/2-Wege-Ventilen, die über zwei T-Verteiler verbunden sind. Jedes Einzelventil ist als Kugelventil ausgebildet und wird mechanisch über Zug/Schub-Stangen bedient. Dabei treten einige bedeutende Nachteile auf:

- lange Betätigungswege der Hebel-Gestänge (150 bis 160 mm)
- hohes Gewicht (ca. 2, 5 kg)
- verschraubte Anschlüsse sind nicht oder nur schwer richtungsverstellbar (bezüglich der Verlaufsrichtung von angeschlossenen Leitungen)
- hoher Material- und Montageaufwand
- hohe Betätigungskraft
- nur direkte manuelle Betätigung möglich, wozu der Fahrer anhalten und das Führerhaus verlassen muß.

Aufgabenstellung

[0005] Der vorliegenden Erfindung liegt die Aufgabe zugrunde, eine zur Vermeidung der beschriebenen Nachteile verbesserte Mehrwege-Ventilanordnung der genannten Art zu schaffen, die sich insbesondere durch reduzierten Material- und Montageaufwand, geringes Gewicht und geringe Betätigungskraft mit der daraus resultierenden Möglichkeit einer automatischen (Fern-) Betätigung auszeichnet.

[0006] Erfindungsgemäß wird dies durch die Merkmale des Anspruchs 1 erreicht. Vorteilhafte Ausgestaltungen der Erfindung sind in den abhängigen Ansprüchen enthalten.

[0007] Demnach besteht die Ventileinrichtung erfindungsgemäß aus (mindestens) zwei schaltungstechnisch bezüglich der vorhandenen Anschlüsse symmetrischen Teilventilen, die insbesondere als 4/2-Wege-Ventile beliebiger Bauart, bevorzugt aber als Schieberventile ausgebildet sind. Somit handelt es sich vorzugsweise um ein Doppel-Schieberventil mit zwei zusammenwirkenden Schieberventilen. Dies stellt eine kostengünstige Lösung dar, die mit minimalem Aufwand alle Funktionen der bekannten Ventilanordnung erfüllt, dabei aber aus sehr wenigen Einzelkomponenten besteht. Daraus resultiert auch ein geringer Herstellungs- und Montageaufwand. Der Einsatz von Schieberventilen ist auch bezüglich der Durchflusseigenschaften sehr vorteilhaft, weil große Strömungsquerschnitte realisiert werden können. So müssen keine Dichtungen umströmt werden, so dass die Strömungsquerschnitte innerhalb der Ventilanordnung sogar um etwa 20 % größer sein können, als in den angeschlossenen Leitungen, und dies sogar ohne größere Einbaumaße der Ventilanordnung. Die zur Betätigung notwendigen Schaltwege können kleiner als 30 mm gehalten werden.

[0008] Die Betätigungskräfte sind derart gering, dass auch ein Schalten mit automatischen Mitteln, insbesondere elektromagnetisch oder pneumatisch, möglich ist. Zudem kann gegenüber der bekannten Ausführung eine Gewichtsreduzierung von mindestens 50 % (bei manueller Betätigung) bzw. von mindestens 20 % (bei automatischer Betätigung) erreicht werden. Schließlich können alle Anschlüsse auf recht einfache Weise, insbesondere durch Verwendung von Steckverbindungen, richtungseinstellbar, ausgelegt sein.

Champion - EX2109, Page 337 of 403
Generac Power Systems, Inc. et al v. Champion Power Equip., Inc.
IPR2025-01438

[0009] Jedes Teilventil weist zwei Tankanschlüsse für Vor- und Rücklauf und zwei Motoranschlüsse für Vor- und Rücklauf auf, wobei die Vorlauf-Motoranschlüsse der Teilventile miteinander zu einem gemeinsamen Vorlauf-Motoranschluss sowie die Rücklauf-Motoranschlüsse der Teilventile miteinander zu einem gemeinsamen Rücklauf-Motoranschluss verbunden sind.

[0010] Es sei an dieser Stelle bemerkt, dass das bevorzugte Doppel-Schieberventil grundsätzlich auch unabhängig von der speziellen Anwendung eingesetzt werden kann, und zwar als 6/3- bzw. 6/4-Wege-Ventil.

Ausführungsbeispiel

[0011] Anhand von in der Zeichnung veranschaulichten, bevorzugten Ausführungsbeispielen soll die Erfindung genauer erläutert werden. Dabei zeigen:

[0012] Fig. 1 eine Perspektivansicht einer erfindungsgemäßen Ventilanordnung (ohne endseitige Deckelelemente),

[0013] Fig. 2 eine Seitenansicht der Ventilanordnung in Pfeilrichtung II gemäß Fig. 1,

[0014] Fig. 3 einen Axialschnitt in der Ebene III-III gemäß Fig. 2,

[0015] Fig. 4 einen weiteren Axialschnitt in der zur Ansicht nach Fig. 3 senkrechten Schnittebene IV-IV gemäß Fig. 3,

[0016] Fig. 5 eine Ausschnittvergrößerung des Bereichs V in Fig. 4,

[0017] Fig. 6 eine vergrößerte Ansicht eines Deckelelementes in Pfeilrichtung VI gemäß Fig. 7,

[0018] Fig. 7 einen Schnitt in der Ebene VII-VII in Fig. 6,

[0019] Fig. 8 eine teilweise geschnittene Seitenansicht eines Einzelteils, und zwar eines Schiebers, der erfindungsgemäßen Ventilanordnung,

[0020] Fig. 9 einen Querschnitt in der Ebene IX-IX gemäß Fig. 8,

[0021] Fig. 10 bis Fig. 13 Darstellungen analog zu Fig. 3 in verschiedenen Schaltstellungen der erfindungsgemäßen Ventilanordnung,

[0022] Fig. 14 eine Seitenansicht der Ventilanordnung in einer vorteilhaften Ausgestaltung mit einer Druckmittel-Betätigungseinrichtung,

[0023] Fig. 15 einen Axialschnitt in der Ebene XV-XV in Fig. 14,

[0024] Fig. 16 eine vergrößerte Darstellung des Bereichs XVI der Betätigungseinrichtung in Fig. 15,

[0025] Fig. 17 eine vergrößerte Axialschnittansicht eines Einzelteils, und zwar eines Betätigungskolbens, der Betätigungseinrichtung gemäß Fig. 15 bzw. Fig. 16,

[0026] Fig. 18 eine Stirnansicht des Betätigungskolbens in Pfeilrichtung XVIII gemäß Fig. 17,

[0027] Fig. 19 eine Seitenansicht in Pfeilrichtung XIX in Fig. 18,

[0028] Fig. 20 einen weiteren Axialschnitt in der Ebene XX-XX in Fig. 18,

[0029] Fig. 21 eine weitere Ansicht eines Deckelelementes in einer gegenüber Fig. 6 alternativen Ausführung,

[0030] Fig. 22 einen Teilschnitt der Ventilanordnung entsprechend der Schnittlinie XII-XII in Fig. 15 mit zusätzlicher Darstellung von Anschlußsteckern und

[0031] Fig. 23 ein vereinfachtes Schaltbild der erfindungsgemäßen Ventilanordnung als Umschaltventil zwischen zwei Kraftstofftanks und einem Motor, beispielhaft in einer Schaltstellung wie in Fig. 13.

[0032] In den verschiedenen Figuren der Zeichnung sind gleiche Teile stets mit den gleichen Bezugszeichen versehen.

[0033] Wie sich zunächst aus Fig. 23 ergibt, wird eine erfindungsgemäße Mehrwege-Ventilanordnung **1** insbesondere als Kraftstofftank-Umschaltventil zwischen zwei Kraftstofftanks A und B und einem nur schematisch angedeuteten Motor M in einem Kraftfahrzeug (LKW) eingesetzt. Die Ventilanordnung **1** weist dazu zweimal zwei Tankanschlüsse A1, A2 für den Tank A und B1, B2 für den Tank B auf, wobei die Anschlüsse A1 und B1 als Vorlauf-Tankanschlüsse für je eine vom Tank A bzw. B zur Ventilanordnung **1** führende Tank-Saugleitung **2**, **4** und die Anschlüsse A2 und B2 als Rücklauf-Tankanschlüsse für je eine zurück in Richtung Tank A bzw. B führende Rücklaufleitung **6**, **8** fungieren. Ferner weist die Ventilanordnung **1** zwei Motoranschlüsse M1 und M2 auf, wobei der Anschluss M1 als Vorlauf-Motoranschluss für eine zum Motor M führende Vorlaufleitung **10** und der Anschluss M2 als Rücklauf-Motoranschluss für eine vom Motor M kommende Rücklaufleitung **12** vorgesehen sind. Die Ventilanordnung **1** weist weiterhin eine Ventileinrichtung derart auf, dass die Vorlauf-Tankanschlüsse A1, B1 alternativ oder gemeinsam mit dem Vorlauf-Motoranschluss M1 und die Rücklauf-Tankanschlüsse A2, B2 alternativ oder ge-

Champion - EX2109, Page 338 of 403
Generac Power Systems, Inc. et al v. Champion Power Equip., Inc.
IPR2025-01438

meinsam mit dem Rücklauf-Motoranschluss M2 verbindbar sind. Dadurch kann alternativ entweder der Tank A oder der Tank B mit dem Motor verbunden werden, oder es können beide Tanks A und B parallel mit dem Motor verbunden werden. Vorzugsweise ist noch eine vierte Schaltstellung vorgesehen, wobei beide Tanks A und B vom Motor M getrennt, d. h. abgesperrt sind. Diese vierte Schaftstellung (siehe Fig. 10) kann beispielsweise – durch eine geeignete Steuerung betätigt – den Kraftstoff zwangsweise absperren, um als Wegfahrsperre zu dienen oder als Sicherheitsventil bei einem Unfall einen ungewollten Kraftstoffaustritt aus beschädigten Leitungen oder Aggregaten zu verhindern. In Fig. 23 ist beispielhaft die Schaltstellung dargestellt, wobei der Tank B mit dem Motor M verbunden ist, während der andere Tank A abgesperrt ist. Zu den anderen Schaltstellungen wird bereits an dieser Stelle auf die Fig. 10 bis Fig. 13 verwiesen.

[0034] Erfindungsgemäß besteht nun die Ventileinrichtung **1** aus zwei zusammenwirkenden, Mehrwege-Teilventilen V1, V2, insbesondere Schieberventilen **14** und **16**. Jedes Teilventil V1, V2 bzw. Schieberventil **14**, **16** ist als 4/2-Wege-Ventil ausgebildet und weist zwei der Tankanschlüsse, und zwar einerseits A1 und A2 und andererseits B1 und B2, für Vor- und Rücklauf auf. Die Motoranschlüsse M1 und M2 sind mit beiden Schieberventilen **14**, **16** verbunden. Daraus resultiert insgesamt ein Aufbau als 6/3- oder 6/4-Wege-Ventil mit sechs Anschlüssen und mindestens drei, vorzugsweise vier Schaltstellungen.

[0035] Jedes Schieberventil **14**, **16** weist ein Ventilgehäuse **18** und einen in einem länglichen, zylinderartigen Schieberraum **20** innerhalb des Ventilgehäuses **18** in Richtung einer Schieberachse **22** kolbenartig zwischen (mindestens) zwei Schaltstellungen längsverschiebbaren Schieber **24** auf (vgl. hierzu auch die gesonderte Darstellung in Fig. 8). Jeder Schieberraum **20** weist an axial, d. h. in Richtung der Schieberachse **22** versetzten Stellen vier Steueröffnungen **26** auf, die jeweils mit einem der Tankanschlüsse A1, A2 bzw. B1, B2 bzw. einem der Motoranschlüsse M1 bzw. M2 verbunden sind. Je nach Stellung der Schieber **24** können die Steueröffnungen **26** paarweise verbunden oder gegeneinander abgesperrt werden.

[0036] In der bevorzugten Ausführung sind die zwei Schieberventile **14**, **16** direkt benachbart und bezüglich ihrer Schieberachsen **22** parallel zueinander angeordnet. In weiterer vorteilhafter Ausgestaltung sind dabei die beiden Ventilgehäuse **18** zu einem monolithisch einstückigen Gehäuse-Formteil **28** zusammengefasst. Dieses Formteil **28** ist insbesondere als Kunststoff-Spritzteil oder als Druckgussteil beispielsweise aus Aluminium oder Zink ausgebildet. Auch dies trägt zu einer wirtschaftlichen Herstellung bei. Grundsätzlich kann aber das Formteil **28** auch aus Vollmaterial durch eine spanende Bearbeitung hergestellt werden.

[0037] Das einstückige Gehäuse-Formteil **28** mit den beiden Ventilgehäusen **18** ist bezüglich einer mittigen Symmetrieebene **30** spiegelsymmetrisch ausgebildet. Dabei erstrecken sich die Tankanschlüsse A1, A2 und B1 und B2 jeweils mit zur Symmetrieebene **30** paralleler oder senkrechter Verlaufsrichtung von dieser weg nach außen. Die Motoranschlüsse M1, M2 sind mittig mit einer der Symmetrieebene **30** entsprechenden Verlaufsrichtung angeordnet. Somit liegen die Motoranschlüsse M1, M2 mittig zwischen den beiden Schieberventilen **14**, **16**. Jeder Motoranschluss M1, M2 geht in einen Kanal über, der zur Bildung der zugehörigen Steueröffnungen **26** die Schieberräume **20** beider Schieberventile **14**, **16** anschneidet. Dadurch sind auf einfache Weise die Motoranschlüsse M1, M2 mit beiden Schieberventilen **14** und **16** verbunden.

[0038] Jeder Schieber **24** weist an axial beabstandeten Stellen Umfangsdichtungen **32** auf, die mit inneren Dichtflächen des jeweiligen Ventilgehäuses **18** zusammenwirken. Dabei besteht jeder Schieber **24** – siehe insbesondere Fig. 8 – aus einem zentrischen, axialen Kern **36** und mehreren, in der dargestellten Ausführung vier, radialen tellerartigen Ventilscheiben **38** sowie einem einseitig aus dem jeweiligen Ventilgehäuse **18** nach außen geführten Betätigungsende **40**. Jede Ventilscheibe **38** trägt auf ihrem Außenumfang vorzugsweise in einer Ringnut **42** eine der Umfangsdichtungen **32**. Die Umfangsdichtungen **32** können von elastischen O-Ringen gebildet sein. Gemäß Fig. 8 ist es vorteilhaft, wenn die Ventilscheiben **38** im Bereich radial zwischen dem Kern **36** und dem äußeren Umfang axiale Hinterschneidungen **44** aufweisen. Bei einer bevorzugten Herstellung der Schieber **24** als einstückige Kunststoff-Formteile werden durch die Hinterschneidungen **44** vorteilhafterweise Materialanhäufungen und damit ein Verzug vermieden. Diese Hinterschneidungen **44** werden bei der Fertigung durch eine sogenannte Springkerntechnik entformt.

[0039] In weiterer vorteilhafter Ausgestaltung der Erfindung ist hierbei vorgesehen, dass die Umfangsdichtungen **32** bezüglich ihrer Außendurchmesser D1, D2, D3 (siehe hierzu Fig. 8) sowie die Dichtflächen **34** bezüglich ihrer Innendurchmesser D'1, D'2 und D'3 (siehe Fig. 4) in Anpassung aneinander derart ausgelegt sind, dass jede Umfangsdichtung **32**, die sich bei einem Schaltvorgang axial über den Bereich einer der Steueröffnungen **26** hinweg bewegt (im dargestellten Beispiel sind dies die Dichtungen **32b** und **32d**; siehe Fig. 4 und Fig. 8), in ihrem sich axial über die jeweilige Steueröffnungen **26** hinweg erstreckenden Bewegungsbereich radial im Wesentlichen unverpresst ist und erst in einem jeweils axial zwischen zwei voneinander zu trennenden Steueröffnungen **26** liegenden Dichtbereich radial verpresst

Champion - EX2109, Page 339 of 403
Generac Power Systems, Inc. et al v. Champion Power Equip., Inc.
IPR2025-01438

wird. Durch diese vorteilhafte Maßnahme wird vermieden, dass eine der Umfangsdichtungen **32** bei ihrer Bewegung über eine seitlich in den Schieberraum **20** mündende Steueröffnung **26** hinweg beschädigt werden könnte, denn in einem verpressten Zustand könnte sich die Dichtung in die Steueröffnung **26** hinein ausdehnen und bei der weiteren Bewegung am Öffnungsrand hängenbleiben und so beschädigt werden. Dies wird durch die erfindungsgemäße Maßnahme vermieden. Konkret ist bei der bevorzugten Ausführung vorgesehen, dass der Schieberraum **20** jedes Ventilgehäuses **18** ausgehend von einem für das Betätigungsende **40** des Schiebers **24** offenen Ende **46** mehrere axial über konische Übergänge **48** ineinander übergehende, im Wesentlichen zylindrische Dichtflächen **34a** bis c aufweist, deren Innendurchmesser D'1 bis D'3 sich sukzessive über die konischen Übergänge **48** verkleinern (siehe nochmals Fig. 4). Es sei bemerkt, dass die Dichtflächen **34** auch jeweils schwach konisch, d. h. mit einem kleinen Konuswinkel ≤ 1°, ausgebildet sein können. Dies ermöglicht eine vereinfachte Entformbarkeit bei der Herstellung als Spritz- oder Druckgussteil. Die Auslegung der Durchmesser muss dabei in Relation zu den zugehörigen Umfangsdichtungen natürlich so sein, dass jede Umfangsdichtung **32** in ihrer Dichtstellung im Bereich der zugehörigen Dichtfläche **34** eine sichere Abdichtung gewährleistet. Was den Schieber **24** betrifft (siehe Fig. 8), so weist die – ausgehend vom Betätigungsende **40** – erste Umfangsdichtung **32a** einen Durchmesser D1 auf, der an den Innendurchmesser D'1 der ersten Dichtfläche **34a** so angepasst ist, dass diese Umfangsdichtung **32a** zur Abdichtung verpresst ist. Damit dient diese erste Umfangsdichtung **32a** zur ständigen Abdichtung des Schieberraums **20** nach außen in Richtung des offenen Endes **46**. Die nächste, zweite Umfangsdichtung **32b** weist demgegenüber einen reduzierten Durchmesser D2 auf, so dass diese zweite Umfangsdichtung **32b** im Bereich der ersten Dichtfläche **34a** nicht oder zumindest nicht vollständig radial verpresst ist. Dadurch kann sie sich über den Bereich der ersten Steueröffnung **26** hinweg schadlos bewegen. Im Anschluss daran wird diese zweite Umfangsdichtung **32b** über den konischen Übergang **48** radial verpresst, bis sie dann dichtend auf der zweiten Dichtfläche **34b** mit dem Innendurchmesser D'2 anliegt. In analoger Weise verhält sich dies auch mit der dritten und vierten Umfangsdichtung **32**. So liegt die dritte Umfangsdichtung **32c** in jeder Stellung radial verpresst und dadurch dichtend an der Dichtfläche **34b** an. Ihr Durchmesser D2 entspricht demgemäß etwa dem Innendurchmesser D'2. Die vierte und letzte Umfangsdichtung **32d** weist einen weiter reduzierten Durchmesser D3 auf, so dass sie folglich im Bereich dieser Dichtfläche **34b** mit dem Innendurchmesser D'2 nicht oder nur unwesentlich radial verpresst ist. Sie kann sich dadurch über den Bereich der weiteren Steueröffnung **26** schadlos hinweg bewegen und wird dann über den weiteren konischen Übergang **48** radial verpresst, und zwar entsprechend dem Innendurchmesser D'3 der sich anschließenden Dichtfläche **34c**.

[0040] Es ist zweckmäßig, wenn die Ventilgehäuse **18** an ihren offenen Enden **46** mit einem Deckelelement **50** verschlossen bzw. verschließbar sind. Vorzugsweise dient das Deckelelement **50** auch zur Führung des Betätigungsendes **40** des jeweiligen Schiebers **24**. Dazu weist das Deckelelement **50** jeweils eine Führungsöffnung **52** mit einer dem Querschnitt des Kerns **36** bzw. eines zusätzlichen Führungsabschnittes **54** entsprechenden Öffnungskontur auf. Im dargestellten Beispiel handelt es sich um einen von der Kreisform abweichenden, insbesondere etwa kreuzförmigen Querschnitt, siehe insbesondere Fig. 6, so dass auch eine Führung gegen Verdrehen um die Schieberachse **22** erreicht wird. Durch eine spezielle, insbesondere gegeneinander „verdrehte" Anordnung der Führungsöffnungen **52** (vgl. Fig. 6 und Fig. 21) wird eine definierte Einbaulage der Schieber **24** zur Korrektur von eventuellen, herstellungsbedingten Formabweichungen im Gehäuse **18** erreicht. Hierzu kann der Schieber **24** in der Form dem Gehäuse und dessen Formabweichung angepasst werden. Es ist dabei zudem vorteilhaft, wenn die einzelnen Deckelelemente **50** der beiden Ventilgehäuse **18** über einen Verbindungsabschnitt **56** zu einem einstückigen Teil, insbesondere einem einstückigen Kunststoff-Formteil, zusammengefasst sind.

[0041] In weiterer bevorzugter Ausgestaltung ist jeder Schieber **24** in jeder von zwei Schaltstellungen insbesondere über Rastmittel **58** kraftformschlüssig fixiert. Wie sich insbesondere aus Fig. 5 ergibt, kann als Rastmittel **58** jeweils ein Rastarm **60** im Bereich der Führungsöffnung **52** des Deckelelementes **50** vorgesehen sein, der mit einer Rastnase jeweils in eine Rastausnehmung **62** des Schiebers **24** bzw. des Führungsabschnittes **54** eingreift.

[0042] Wie nur in Fig. 3 stark schematisch angedeutet ist, ist es weiterhin vorteilhaft, wenn zur Schmutzabdichtung zwischen dem Betätigungsende **40** jedes Schiebers **24** und dem Ventilgehäuse **18** bzw. dem damit verbundenen Deckelelement **50** eine faltenbalgartig längenvariable Hülle **64** angeordnet ist.

[0043] In den Ausführungen gemäß Fig. 1 bis Fig. 13 sind die Schieber **24** manuell, insbesondere über nicht dargestellte mechanische Verbindungen, wie Gestänge oder Seilzüge, betätigbar.

[0044] Alternativ oder auch zusätzlich kann eine Betätigungseinrichtung **66** zur motorischen, insbesondere pneumatischen oder hydraulischen oder elektromagnetischen Betätigung der Schieber **24** vorgesehen sein.

Champion - EX2109, Page 340 of 403
Generac Power Systems, Inc. et al v. Champion Power Equip., Inc.
IPR2025-01438

[0045] Hierzu wird auf das Ausführungsbeispiel gemäß Fig. 14 bis Fig. 16 verwiesen, wobei die Ventilgehäuse **18** auf der Seite der Betätigungsenden **40** der Schieber **24** – vorzugsweise zusätzlich zu dem Deckelelement **50** – mit jeweils einem Zylindergehäuse **68** verbunden sind. Die Schieber-Betätigungsenden **40** sind mit jeweils einem in dem Zylindergehäuse **68** geführten Betätigungskolben **70** verbunden. Jedes Zylindergehäuse **68** weist einen Steuerdruckanschluß S1 bzw. S2 auf. Dadurch kann der jeweilige Betätigungskolben **70** auf der Seite eines Arbeitsraums **71** mit einem Druckmittel beaufschlagt werden, um den zugehörigen Schieber **24** insbesondere gegen die Rückstellkraft einer Rückstellfeder **72** zu verschieben. Vorzugsweise ist dabei jeder Betätigungskolben **70** über Rastmittel **74** mit dem Betätigungsende **40** des zugehörigen Schiebers **24** verbunden. Hierzu wird auch auf die gesonderten Darstellungen des Betätigungskolbens **70** in Fig. 17 bis Fig. 20 hingewiesen. Um auf der dem Arbeitsraum **71** gegenüberliegenden Seite des Betätigungskolbens **70** bei der Druck-Betätigung innerhalb des Zylindergehäuses **68** einen Überdruck zu vermeiden bzw. abzubauen, weist das/jedes Zylindergehäuse **68** in diesem Bereich (mindestens) eine Lüftungsöffnung **67** auf, die vorzugsweise außen von einer membranventilartigen, ringbandförmigen Schmutzdichtung **69** überdeckt ist (siehe insbesondere Fig. 16).

[0046] Weiterhin ist es vorteilhaft, wenn die beiden Zylindergehäuse **68** der Betätigungseinrichtung **66** zu einem einstückigen Formteil zusammengefasst sind. Dieses Zylinder-Formteil wird bevorzugt im Bereich von seitlichen Montageansätzen **75** mit dem Gehäuse-Formteil **28** verschraubt, und zwar unter Zwischenlage des einteiligen Deckelelementes **50**. Dieses weist dann gemäß Fig. 21 korrespondierende Montageansätzen **75** mit Schraubenlöchern **76** auf. Zur Positionierung und Montagehilfe sind bevorzugt im Anlagebereich zwischen der Betätigungseinrichtung **66** und dem Deckelelement **50** sowie zwischen letzterem und dem Gehäuse **18** bzw. dem Gehäuse-Formteil **28** Positionsansätze **77** vorgesehen, die in korrespondierende Öffnungen eingreifen (siehe insbesondere Fig. 16). Durch eine unterschiedliche Anordnung und/oder Form, z.B. unterschiedliche Durchmesser, der Positionseinsätze **77** können die Teile nur korrekt und lagerichtig miteinander verbunden werden, so dass vorteilhafterweise eine Fehlmontage praktisch ausgeschlossen ist.

[0047] Bei der Alternative gemäß Fig. 2 bis Fig. 13 ist das Deckelelement **50** gemäß Fig. 6 über Rastmittel **78** mit den Ventilgehäusen **18** bzw. dem Gehäuse-Formteil **28** verrastbar.

[0048] Dabei kann auch die Betätigungseinrichtung **66** über Rastmittel befestigt werden (nicht dargestellt).

[0049] Es ist weiterhin zweckmäßig, wenn alle vorgesehenen Anschlüsse A1/2, B1/2, M1/2 und S1/2 als Kupplungsteile zum insbesondere richtungsvariablen Steckanschluss von Leitungen ausgebildet sind. Hierzu wird auf Fig. 22 verwiesen, wonach jeder Anschluss als muffenartige Aufnahmeöffnung **80** zum Einstecken eines Steckerteils **82** ausgebildet ist. Dabei sind zudem geeignete Arretiermittel **84** zum lösbaren Arretieren des eingesteckten Steckerteils **82** vorgesehen. Im dargestellten Beispiel weist jeder Anschluss im Mündungsbereich der Aufnahmeöffnung **80** einen radial nach außen ragenden Umfangsrand **86** auf, der im eingesteckten Zustand von äußeren, sich axial erstreckenden Rastarmen **88** des jeweiligen Steckerteils **82** rastend übergriffen wird. Zum Lösen können die Rastarme **88** radial nach außen gespreizt werden. Vorteil dieser Anschlussart ist, dass die Verlaufsrichtung der angeschlossenen Leitung (selbst nicht dargestellt) variabel ist, weil sich die Steckerteile **82** relativ zu den Anschlüssen verdrehen lassen. Im dargestellten Beispiel gemäß Fig. 22 weist jedes Steckerteil 82 zum Leitungsanschluss einen üblichen Anschlussdorn **90** auf.

[0050] Die Bestandteile der erfindungsgemäßen Ventilanordnung **1**, und zwar insbesondere die Ventilgehäuse **18** bzw. das einstückige Gehäuse-Formteil **28**, die Schieber **24** und vorzugsweise auch die Deckelelemente **50** und optional die Zylindergehäuse **68** und die Betätigungskolben **70**, bestehen vorzugsweise aus dem gleichen Material, und zwar insbesondere aus einem faserverstärkten Kunststoff, wie PA12-GF50. Dieses bevorzugte Material weist eine geringe Wasseraufnahme auf und eignet sich gut zur Anwendung mit Kraftstoffen, insbesondere Diesel. Durch Verwendung von gleichen Materialien für die Bestandteile werden Undichtigkeiten, die durch thermische Dehnung entstehen könnten, vermieden.

[0051] Das Gehäuse-Formteil **28** weist zur Montagebefestigung an einem nicht dargestellten Träger in einem Kraftfahrzeug mindestens zwei, bevorzugt drei außen angeformte Befestigungselemente **92** auf, die insbesondere derart gegenüber den Bereichen der Dichtflächen **34** axial und/oder radial versetzt angeordnet sind, dass bei der Montage ein Verzug des Formteils und daraus resultierende Formveränderungen im Bereich der Dichtflächen **34** weitgehend ausgeschlossen sind. Dies gewährleistet eine gute Funktionsfähigkeit und dauerhafte Dichtwirkung im Bereich der Umfangsdichtungen **32** und Dichtflächen **34**.

[0052] Die Funktion der erfindungsgemäßen Ventilanordnung **1** dürfte durch die obigen Erläuterungen des konstruktiven Aufbaus bereits hinreichend klar sein. Ergänzend wird auf die Darstellungen in den Fig. 10 bis Fig. 13 verwiesen. In Fig. 10 ist eine optionale Absperrstellung dargestellt, in der alle vorhandenen Anschlüsse voneinander getrennt sind.

Champion - EX2109, Page 341 of 403
Generac Power Systems, Inc. et al v. Champion Power Equip., Inc.
IPR2025-01438

Fig. 11 zeigt die Ventilstellung zur Verbindung des Tanks A mit dem Motor M, indem A1 mit M1 und A2 mit M2 verbunden sind. Der Tank B ist vom Motor M abgesperrt. Die umgekehrte Schaltstellung ist in Fig. 13 dargestellt, wobei der Tank A abgesperrt und der Tank B mit dem Motor M verbunden ist. Schließlich zeigt Fig. 12 eine Stellung, in der beide Tanks A und B mit dem Motor M verbunden sind. Diese Schaltstellung ist vorgesehen für den Fall, dass beide Tanks mit dem selben Kraftstoff befüllt sind.

[0053] Die Absperrstellung gemäß Fig. 10 kann als Prüfstellung zur Dichtheitsprüfung vorgesehen sein. Dabei bilden sich im Ventil zwei Prüfkammern, die über die beiden Motoranschlüsse M1 und M2 mit einem Prüfdruck beaufschlagt werden können. Diese Prüfkammern werden von den Umfangsdichtungen **32** der Schieber **24** gedichtet. Im Falle eines gemessenen Druckabfalls des Prüfdruckes kann auf eine beschädigte oder gar fehlende Umfangsdichtung geschlossen werden.

[0054] Durch die beschriebene Ausgestaltung der Ventilanordnung **1** bzw. der beiden Schieberventile **14**, **16** werden Vor- und Rücklauf eines Tanks stets nur gemeinsam geschaltet. Dadurch sind Vertauschungen ausgeschlossen.

[0055] Es sei nochmals bemerkt, dass ein Schieberventil **14** bzw. **16** der beschriebenen Art bzw. ein Doppel-Schieberventil der bevorzugten Art auch unabhängig von der beschriebenen, speziellen Anwendung als Tank-Umschaltventil als allgemeines 4/2-bzw. 6/3- oder 6/4-Wege-Ventil verwendet werden kann.

[0056] Im Übrigen ist die Erfindung ohnehin nicht auf die beschriebenen Ausführungsbeispiele beschränkt, sondern erstreckt sich auch auf gleichwirkende Ausführungen. Ferner ist die Erfindung bislang auch noch nicht auf die im jeweils unabhängigen Anspruch definierte Merkmalskombination beschränkt, sondern kann auch durch jede beliebige andere Kombination von bestimmten Merkmalen aller insgesamt offenbarten Einzelmerkmalen definiert sein. Dies bedeutet, daß grundsätzlich praktisch jedes Einzelmerkmal des jeweils unabhängigen Anspruchs weggelassen bzw. durch mindestens ein an anderer Stelle der Anmeldung offenbartes Einzelmerkmal ersetzt werden kann. Insofern sind die Ansprüche lediglich als ein erster Formulierungsversuch für eine Erfindung zu verstehen.

Patentansprüche

1. Mehrwege-Ventilanordnung (**1**) zur Verwendung als Kraftstofftank-Umschaltventil zwischen mindestens zwei Kraftstofftanks (A, B) und einem Motor (M) in einem Kraftfahrzeug, mit mindestens zweimal zwei Tankanschlüssen (A1, A2; B1, B2). jeweils für Vorlauf und Rücklauf und zwei Motoranschlüssen (M1, M2) für Vorlauf und Rücklauf sowie mit einer Ventileinrichtung derart, dass die Vorlauf-Tankanschlüsse (A1, B1) alternativ oder gemeinsam mit dem Vorlauf-Motoranschluss (M1) und die Rücklauf-Tankanschlüsse (A2, B2) alternativ oder gemeinsam mit dem Rücklauf-Motoranschluss (M2) verbindbar sind, **dadurch gekennzeichnet**, dass die Ventileinrichtung aus mindestens zwei zusammenwirkenden, schalttechnisch symmetrischen Mehrwege-Teilventilen (V1, V2), insbesondere 4/2-Wege-Ventilen, besteht.

2. Ventilanordnung nach Anspruch 1, dadurch gekennzeichnet, dass die Teilventile (V1, V2) als zusammenwirkende Schieberventile (**14**, **16**) ausgebildet sind.

3. Ventilanordnung nach Anspruch 1 oder 2, dadurch gekennzeichnet, dass jedes Teilventil (V1, V2) zwei Tankanschlüsse (A1 und A2 bzw. B1 und B2) für Vor- und Rücklauf und zwei Motoranschlüsse für Vor- und Rücklauf aufweist, wobei die Vorlauf-Motoranschlüsse der Teilventile (V1, V2) miteinander zu einem gemeinsamen Vorlauf-Motoranschluss (M1) sowie die Rücklauf-Motoranschlüsse der Teilventile (V1, V2) miteinander zu einem gemeinsamen Rücklauf-Motoranschluss (M2) verbunden sind.

4. Ventilanordnung nach Anspruch 2 oder 3, dadurch gekennzeichnet, dass jedes Schieberventil (**14**, **16**) ein Ventilgehäuse (**18**) und einen in einem zylinderartigen Schieberraum (**20**) innerhalb des Ventilgehäuses (**18**) in Richtung einer Schieberachse (**22**) kolbenartig zwischen mindestens zwei Schaltstellungen längsverschiebbaren Schieber (**24**) aufweist, wobei jeder Schieberraum (**20**) an axial versetzten Stellen vier Steueröffnungen (**26**) aufweist, die jeweils mit einem der Tankanschlüsse (A1, A2 bzw. B1, B2) bzw. einem der Motoranschlüsse (M1 bzw. M2) verbunden sind.

5. Ventilanordnung nach einem der Ansprüche 2 bis 4, dadurch gekennzeichnet, dass die Schieberventile (**14**, **16**) direkt benachbart und bezüglich ihrer Schieberachsen (**22**) parallel zueinander angeordnet sind.

6. Ventilanordnung nach Anspruch 4 oder 5, dadurch gekennzeichnet, dass die Ventilgehäuse (**18**) der Schieberventile (**14**, **16**) zu einem monolithisch einstückigen Formteil (**28**) zuammengefasst sind.

7. Ventilanordnung nach Anspruch 6, dadurch gekennzeichnet, dass das Formteil (**28**) als Kunststoff-Spritzteil oder als Druckgussteil z.B. aus Aluminium oder Zink oder als spanend bearbeitetes Metall- oder Kunststoffteil ausgebildet ist.

8. Ventilanordnung nach einem der Ansprüche 4

Champion - EX2109, Page 342 of 403
Generac Power Systems, Inc. et al v. Champion Power Equip., Inc.
IPR2025-01438

bis 7, dadurch gekennzeichnet, dass die Ventilgehäuse (**18**) bezüglich einer mittigen Symmetrieebene (**30**) spiegelsymmetrisch ausgebildet sind, wobei sich die Tankanschlüsse (A1, A2; B1, B2) jeweils mit zur Symmetrieebene (**30**) senkrechter oder paralleler Verlaufsrichtung von dieser weg nach außen erstrecken, und wobei die Motoranschlüsse (M1, M2) mittig mit einer der Symmetrieebene (**30**) entsprechenden Verlaufsrichtung angeordnet sind.

9. Ventilanordnung nach Anspruch 8, dadurch gekennzeichnet, dass jeder Motoranschluss (M1, M2) einen Kanal aufweist, der zur Bildung der zugehörigen Steueröffnungen (**26**) die Schieberräume (**20**) beider Schieberventile (**14**, **16**) anschneidet.

10. Ventilanordnung nach einem der Ansprüche 4 bis 9, dadurch gekennzeichnet, dass jeder Schieber (**24**) axial beabstandete Umfangsdichtungen (**32a**–d) aufweist, die mit inneren Dichtflächen (**34**) des jeweiligen Ventilgehäuses (**18**) zusammenwirken.

11. Ventilanordnung nach Anspruch 10, dadurch gekennzeichnet, dass jeder Schieber (**24**) aus einem zentrischen, axialen Kern (**36**) und mehreren, insbesondere vier, radialen, tellerartigen Ventilscheiben (**38**) sowie einem einseitig aus dem Ventilgehäuse (**18**) nach außen geführten Betätigungsende (**40**) besteht, wobei jede Ventilscheibe (**38**) auf ihrem Außenumfang in einer Ringnut (**42**) eine der Umfangsdichtungen (**32a**–d) trägt.

12. Ventilanordnung nach Anspruch 10 oder 11, dadurch gekennzeichnet, dass die Umfangsdichtungen (**32a**–d) bezüglich ihrer Außendurchmesser (D1–D3) sowie die Dichtflächen (**34a**–c) bezüglich ihrer Innendurchmesser (D'1–D'3) in Anpassung aneinander derart ausgelegt sind, dass jede Umfangsdichtung (**32b**, d), die sich bei einem Schaltvorgang axial über den Bereich einer der Steueröffnungen (**26**) bewegt, in ihrem sich axial über die Steueröffnung (**26**) hinweg erstreckenden Bewegungsbereich radial unverpresst und erst in einem jeweils axial zwischen zwei Steueröffnungen (**26**) liegenden Dichtbereich radial verpresst ist.

13. Ventilanordnung nach Anspruch 12, dadurch gekennzeichnet, dass der Schieberraum (**20**) jedes Ventilgehäuses (**18**) ausgehend von einem offenen Ende (**46**) mehrere axial über konische Übergänge (**48**) ineinander übergehende, zylindrische oder schwach konische Dichtflächen (**34a**–c) aufweist, deren Innendurchmesser (D'1 bis D'3) sich sukzessive über die konischen Übergänge (**48**) verkleinern.

14. Ventilanordnung nach einem der Ansprüche 4 bis 13, dadurch gekennzeichnet, dass die Ventilgehäuse (**18**) an ihren offenen Enden (**46**) mit einem Deckelelement (**50**) verschließbar sind, wobei vorzugsweise das Deckelelement (**50**) auch zur Führung des Betätigungsendes (**40**) des jeweiligen Schiebers (**24**) dient.

15. Ventilanordnung nach Anspruch 14, dadurch gekennzeichnet, dass das Deckelelement (**50**) jeweils eine Führungsöffnung (**52**) für einen Führungsabschnitt (**54**) des jeweiligen Schiebers (**24**) aufweist, wobei vorzugsweise eine bestimmte Drehlage mit Sicherung gegen Verdrehen der Schieber (**24**) vorgegeben ist.

16. Ventilanordnung nach einem der Ansprüche 4 bis 15, dadurch gekennzeichnet, dass jeder Schieber (**24**) in jeder von zwei Schaltstellungen insbesondere über Rastmittel (**58**) kraftformschlüssig fixiert ist.

17. Ventilanordnung nach einem der Ansprüche 4 bis 16, dadurch gekennzeichnet, dass zur Schmutzabdichtung zwischen dem Betätigungsende (**40**) jedes Schiebers (**24**) und dem Ventilgehäuse (**18**) bzw. dem damit verbundenen Deckelelement (**50**) eine faltenbalgartige Hülle (**64**) angeordnet ist.

18. Ventilanordnung nach einem der Ansprüche 4 bis 17, gekennzeichnet durch eine den Schiebern (**24**) zugeordnete Betätigungseinrichtung (**66**) zur manuellen oder motorischen, insbesondere pneumatischen oder hydraulischen oder elektromagnetischen Betätigung der Schieber (**24**).

19. Ventilanordnung nach einem der Ansprüche 3 bis 18, dadurch gekennzeichnet, dass die Ventilgehäuse (**18**) auf der Seite der Betätigungsenden (**40**) der Schieber (**24**) mit jeweils einem Zylindergehäuse (**68**) sowie die Schieber-Betätigungsenden (**40**) mit jeweils einem Betätigungskolben (**70**) verbunden bzw. verbindbar sind, wobei jedes Zylindergehäuse (**68**) einen zur Druckbeaufschlagung des Betätigungskolbens (**70**) in einen Arbeitsraum (**71**) mündenden Steuerdruckanschluss (S1, S2) aufweist.

20. Ventilanordnung nach Anspruch 19, dadurch gekennzeichnet, dass jedes Zylindergehäuse (**68**) auf der dem Arbeitsraum (**71**) gegenüberliegenden Seite des Betätigungskolbens (**70**) mindestens eine vorzugsweise mit einer ventilartigen Schmutzdichtung (**69**) ausgestattete Lüftungsöffnung (**67**) aufweist.

21. Ventilanordnung nach einem der Ansprüche 1 bis 20, dadurch gekennzeichnet, dass alle vorgesehenen Anschlüsse (A, B, M, S) als Kupplungsteile zum Steckanschluss von Leitungen ausgebildet sind, wobei vorzugsweise jeder Anschluss als muffenartige Aufnahmeöffnung (**80**) zum Einstecken eines Steckerteils (**82**) ausgebildet ist und Arretiermittel (**84**) zum lösbaren Arretieren des eingesteckten Steckerteils (**82**) vorgesehen sind.

Champion - EX2109, Page 343 of 403
Generac Power Systems, Inc. et al v. Champion Power Equip., Inc.
IPR2025-01438

22. Ventilanordnung nach einem der Ansprüche 4 bis 21, dadurch gekennzeichnet, dass die Ventilgehäuse (**18**) bzw. das einstückige Formteil (**28**) und die Schieber (**24**) aus dem gleichen Material bestehen, insbesondere aus einem faserverstärkten Kunststoff, wie PA12-GF50.

23. Ventilanordnung nach einem der Ansprüche 4 bis 22, dadurch gekennzeichnet, dass die Ventilgehäuse (**18**) bzw. das Gehäuse-Formteil (**28**) mindestens zwei, insbesondere drei Befestigungselemente (**92**) aufweisen/aufweist, die insbesondere derart außerhalb der Bereiche der Dichtflächen (**34**) angeordnet sind, dass bei der Montage und/oder beim Herstellprozess verzugbedingte Verformungen im Bereich der Dichtflächen (**34**) vermieden werden.

24. Ventilanordnung nach einem der vorhergehenden Ansprüche, dadurch gekennzeichnet, dass im Verbindungsbereich zwischen dem Deckelelement (**50**) und dem Ventilgehäuse (**18**) bzw. dem Gehäuse-Formteil (**28**) und/oder im Verbindungsbereich zwischen der Betätigungseinrichtung (**66**) und dem Deckelelement (**50**) in korrespondierende Öffnungen eingreifende Positionsansätze (**77**) insbesondere derart vorgesehen sind, dass nur eine korrekte, lagerichtige Montage möglich ist.

25. Schieberventil (**14**, **16**) insbesondere für eine Ventilanordnung (**1**) nach einem der Ansprüche 1 bis 24, bestehend aus einem Ventilgehäuse (**18**) und einem in einem zylinderartigen Schieberraum (**20**) innerhalb des Ventilgehäuses (**18**) in Richtung einer Schieberachse (**22**) kolbenartig zwischen mindestens zwei Schaltstellungen längsverschiebbaren Schieber (**24**), der axial beabstandete Umfangsdichtungen (**32**) aufweist, die mit inneren Dichtflächen (**34**) des Schieberraums (**20**) zusammenwirken, um in den Schieberraum (**20**) mündende Steueröffnungen (**26**) und damit verbundene Anschlüsse (A1, A2, B1, B2, M1, M2) entweder zumindest paarweise zu verbinden oder gegeneinander abzusperren, dadurch gekennzeichnet, dass die Umfangsdichtungen (**32a**–d) bezüglich ihrer Außendurchmesser (D1–D3) sowie die Dichtflächen (**34a**–c) bezüglich ihrer Innendurchmesser (D'1–D'3) in Anpassung aneinander derart ausgelegt sind, dass jede sich bei einem Schaltvorgang axial über eine der Steueröffnungen (**26**) hinweg bewegende Umfangsdichtung (**32b**, d) in ihrem sich über die Steueröffnung (**26**) hinweg ersteckenden Bewegungsbereich radial unverpresst und erst in einem jeweils axial zwischen zwei Steueröffnungen (**26**) liegenden Dichtbereich radial verpresst ist.

26. Schieberventil nach Anspruch 25, dadurch gekennzeichnet, dass der Schieberaum (**20**) des insbesondere als einstückiges Formteil ausgebildeten Ventilgehäuses (**18**) ausgehend von einem offenen Ende (**46**) mehrere axial über konische Übergänge (**48**) ineinander übergehende, zylindrische oder schwach konische Dichtflächen (**34a**–c) aufweist, deren Innendurchmesser (D'1 bis D'3) sich sukzessive über die konischen Übergänge (**48**) verkleinern.

27. Schieberventil-Anordnung, gekennzeichnet durch zwei direkt benachbart und bezüglich ihrer Schieberachsen (**22**) parallel zueinander angeordnete Schieberventile (**14**, **16**) nach Anspruch **25** oder **26**.

28. Schieberventil-Anordnung nach Anspruch 27, dadurch gekennzeichnet, dass die beiden Ventilgehäuse (**18**) der Schieberventile (**14**, **16**) zu einem monolithisch einstückigen Formteil (**28**), insbesondere einem Kunststoff-Spritzteil oder einem Druckgussteil z.B. aus Aluminium oder Zink oder einem spanend bearbeiteten Metall- oder Kunststoffteil, zuammengefasst sind.

29. Schieberventil-Anordnung nach Anspruch 27 oder 28, dadurch gekennzeichnet, dass die Ventilgehäuse (**18**) bezüglich einer mittigen Symmetrieebene (**30**) spiegelsymmetrisch ausgebildet sind, wobei sich je zwei separate Anschlüsse (A1, A2; B1, B2) jeweils mit zur Symmetrieebene (**30**) senkrechter oder paralleler Verlaufsrichtung von dieser weg nach außen erstrecken, und wobei zwei gemeinsame Anschlüsse (M1, M2) mittig mit einer der Symmetrieebene (**30**) entsprechenden Verlaufsrichtung angeordnet sind.

30. Schieberventil nach Anspruch 25 oder 26 oder Anordnung nach einem der Ansprüche 27 bis 29, gekennzeichnet durch mindestens ein weiteres Merkmal der Ansprüche 1 bis 24.

31. Ventilgehäuse (**18**) für eine Ventilanordnung (**1**) nach einem der Ansprüche 1 bis 24 oder für ein Schieberventil (**14**, **16**) nach Anspruch 25 oder 26 oder 30.

32. Gehäuse-Formteil (**28**) für eine Ventilanordnung (**1**) nach einem der Ansprüche 1 bis 24 oder für eine Schieberventil-Anordnung nach einem der Ansprüche 27 bis 30.

33. Schieber (**24**) für eine Ventilanordnung (**1**) nach einem der Ansprüche 1 bis 24 oder für ein Schieberventil (**14**, **16**) nach Anspruch 25, 26 oder 30 oder für eine Schieberventil-Anordnung nach einem der Ansprüche 27 bis 30.

Es folgen 6 Blatt Zeichnungen

Champion - EX2109, Page 344 of 403
Generac Power Systems, Inc. et al v. Champion Power Equip., Inc.
IPR2025-01438

Anhängende Zeichnungen

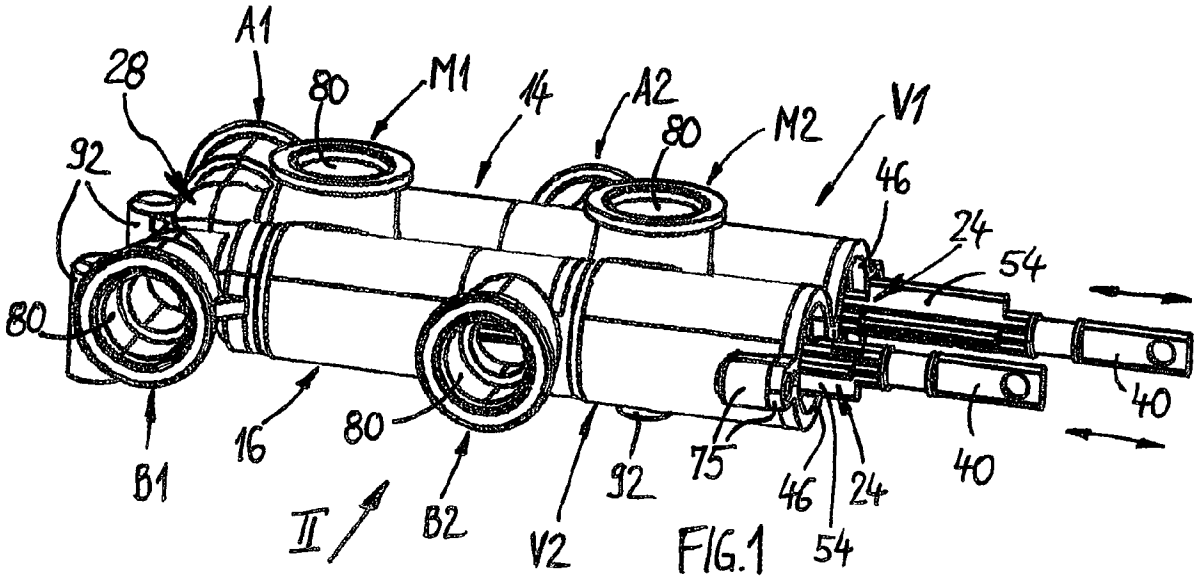

FIG.1

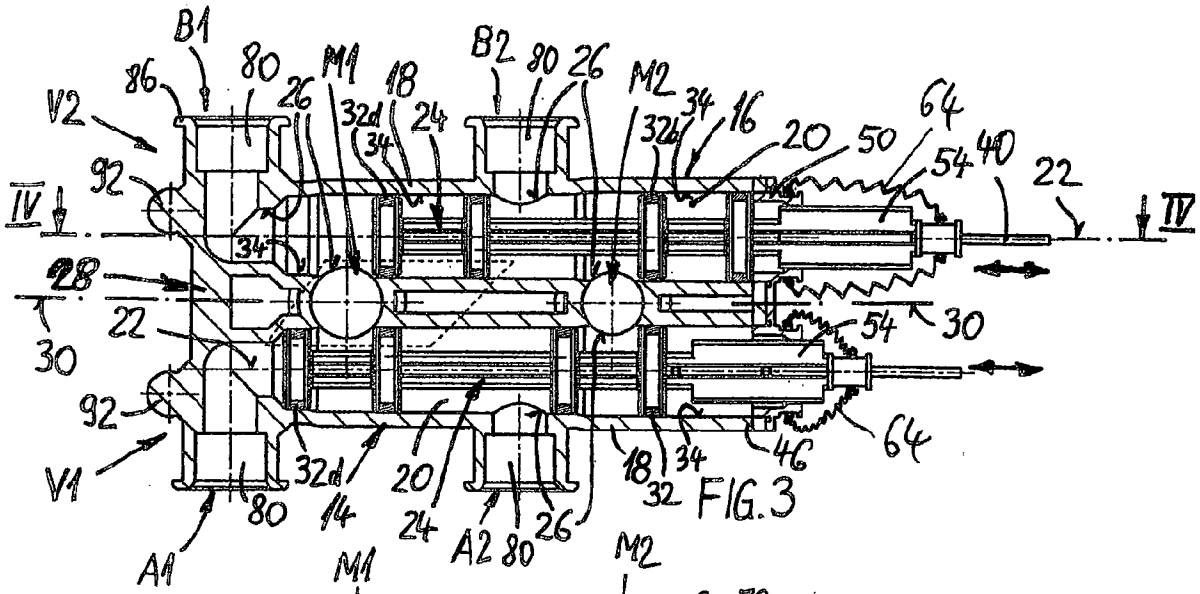

FIG.3

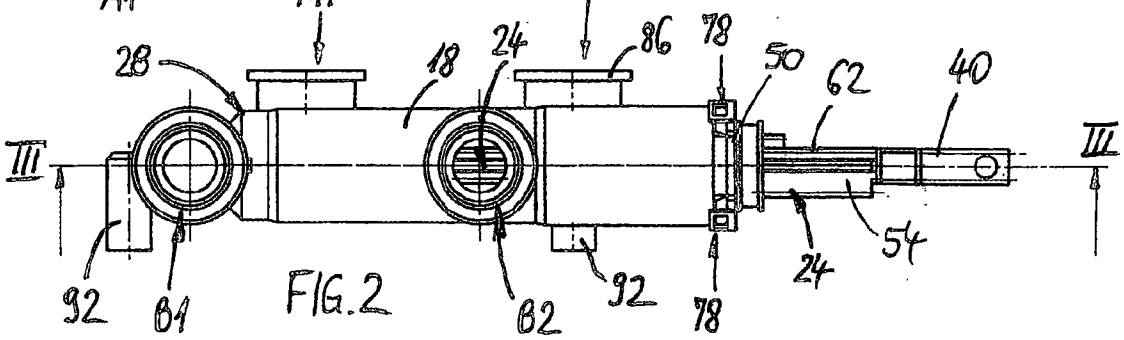

FIG.2

Champion - EX2109, Page 345 of 403
Generac Power Systems, Inc. et al v. Champion Power Equip., Inc.
IPR2025-01438

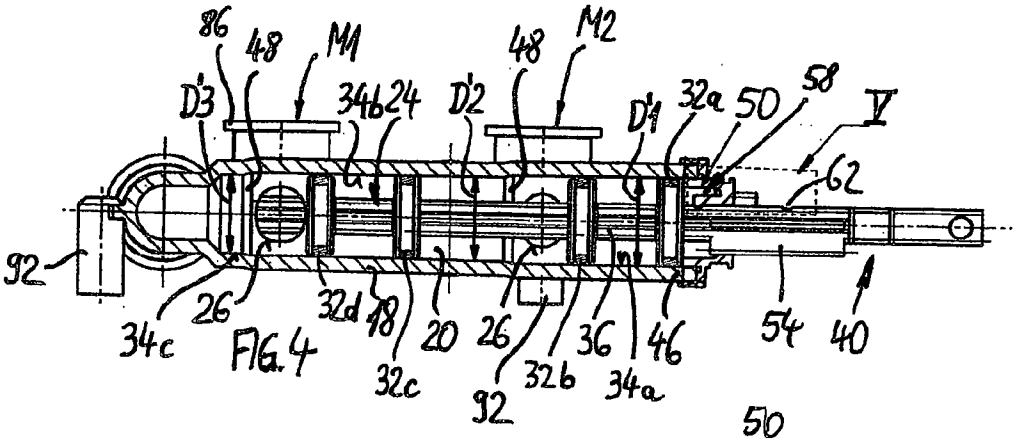

FIG.4

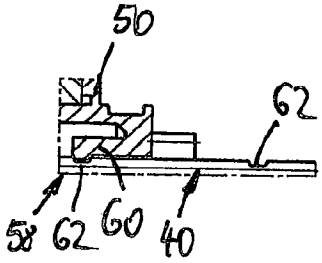

FIG.5

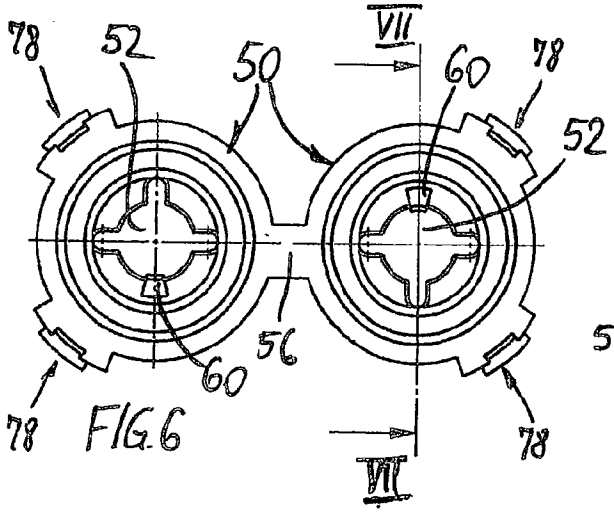

FIG.6

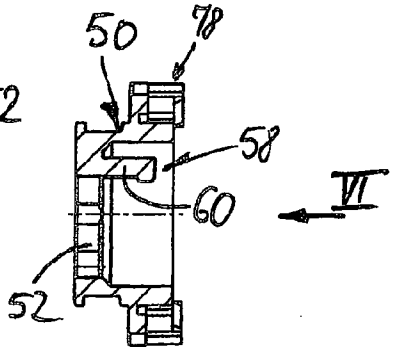

FIG.7

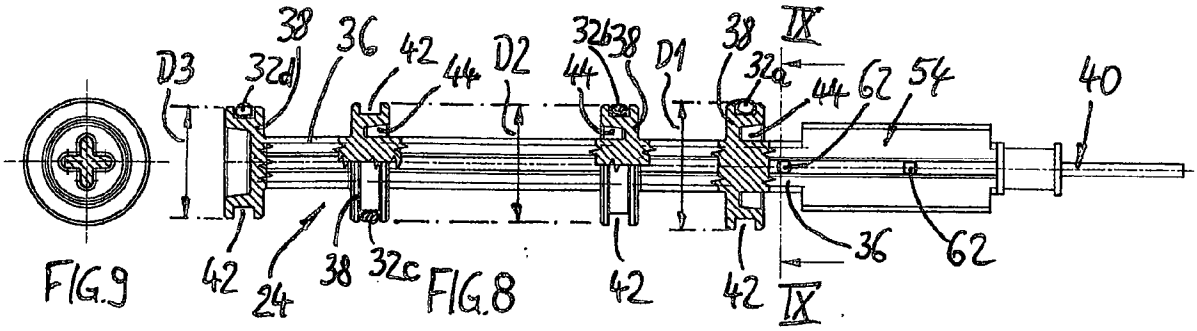

FIG.9

FIG.8

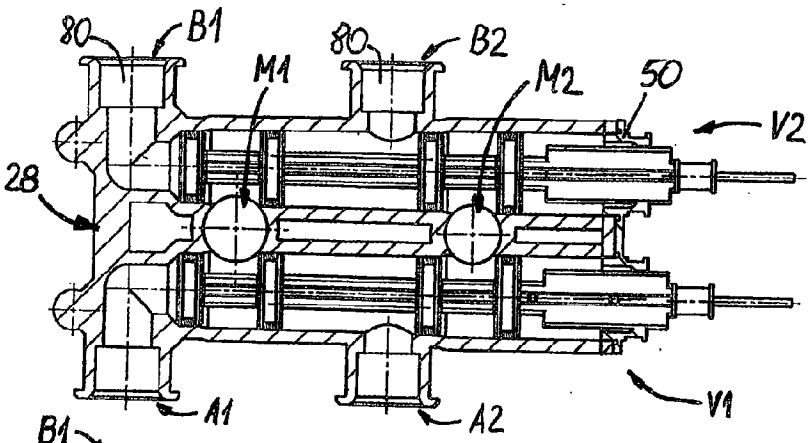

FIG. 10

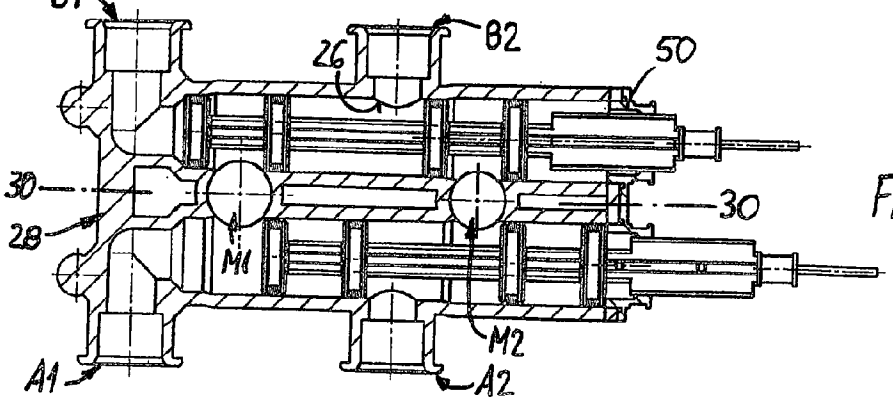

FIG. 11

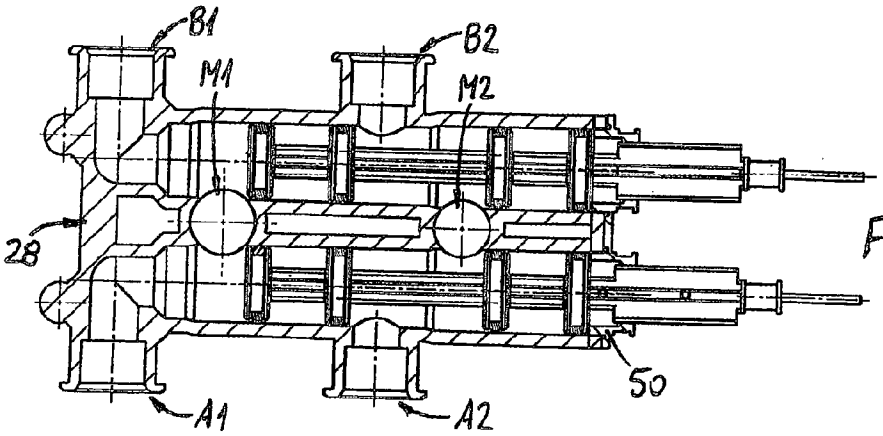

FIG. 12

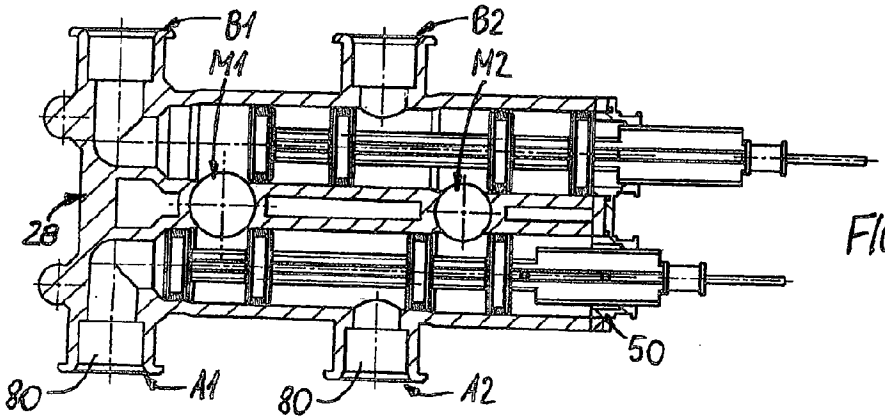

FIG. 13

Champion - EX2109, Page 347 of 403
Generac Power Systems, Inc. et al v. Champion Power Equip., Inc.
IPR2025-01438

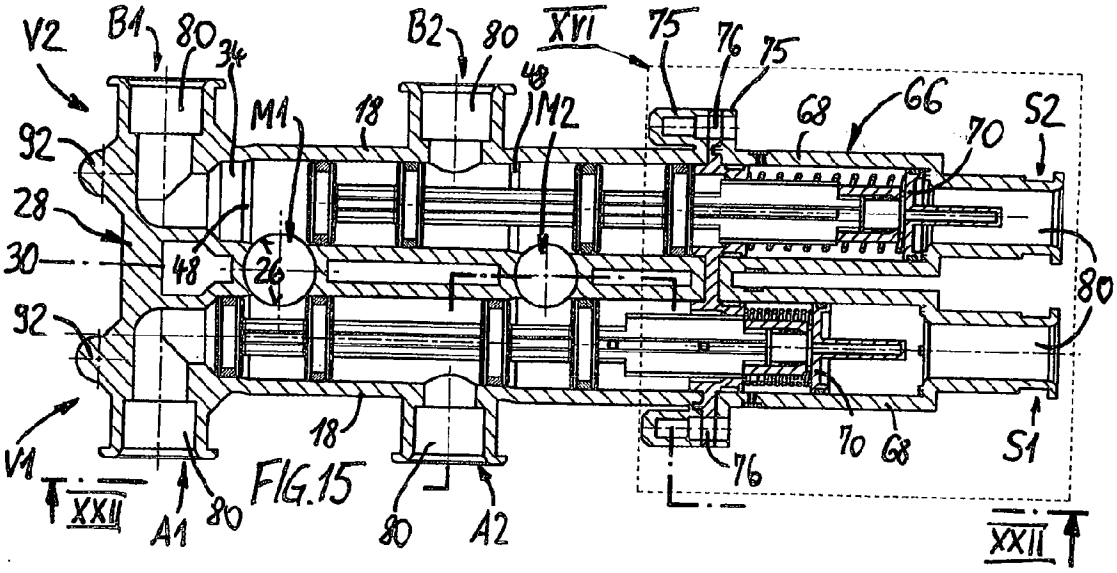

FIG.15

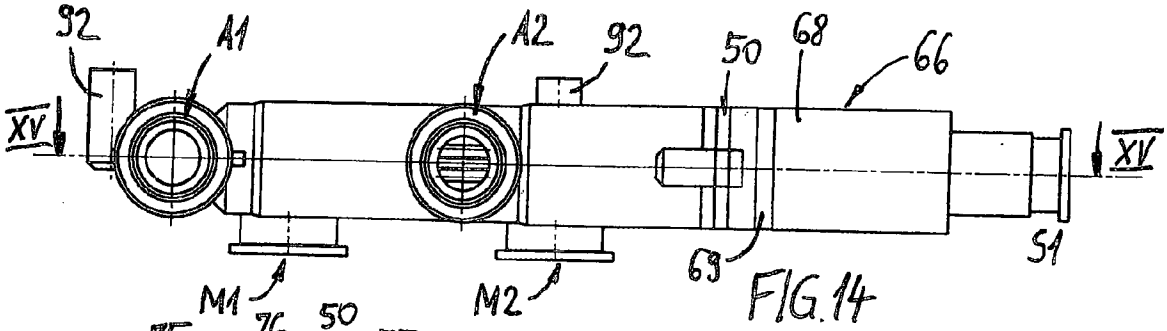

FIG.14

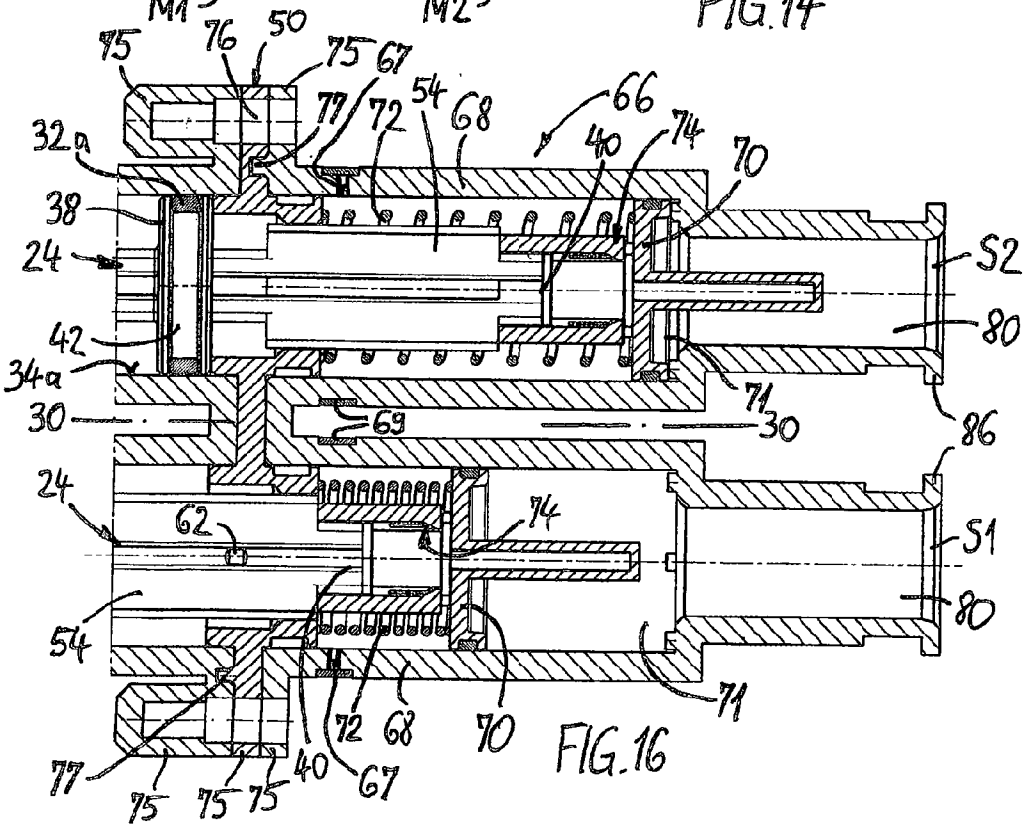

FIG.16

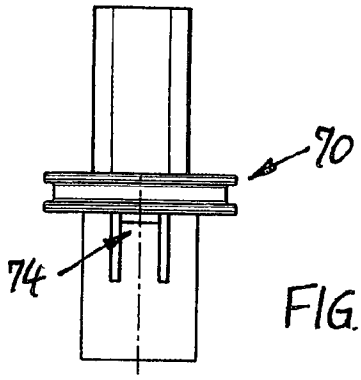

FIG. 19

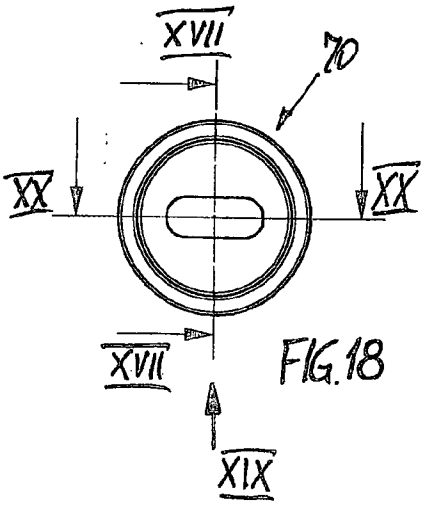

FIG. 18

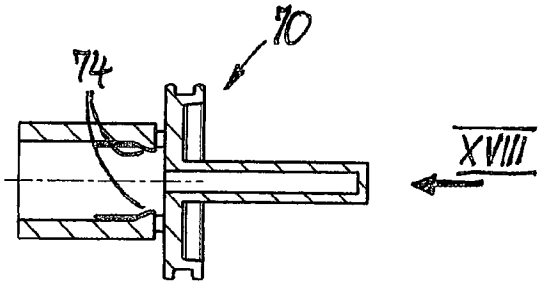

FIG. 17

FIG. 20

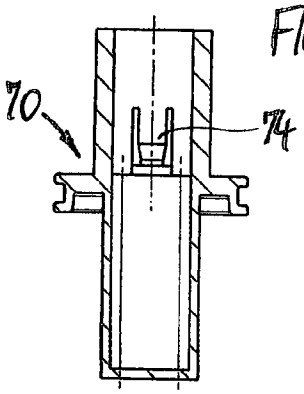

FIG. 21

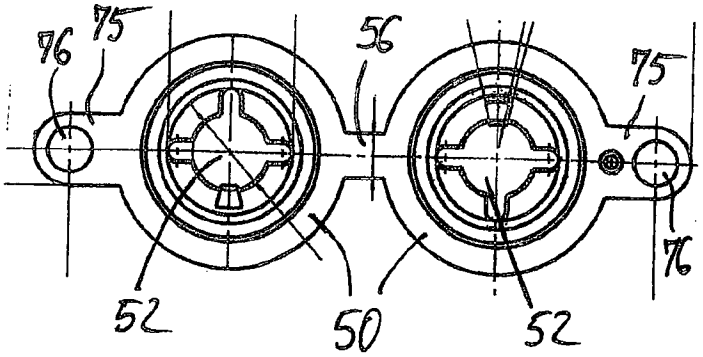

Champion - EX2109, Page 349 of 403
Generac Power Systems, Inc. et al v. Champion Power Equip., Inc.
IPR2025-01438

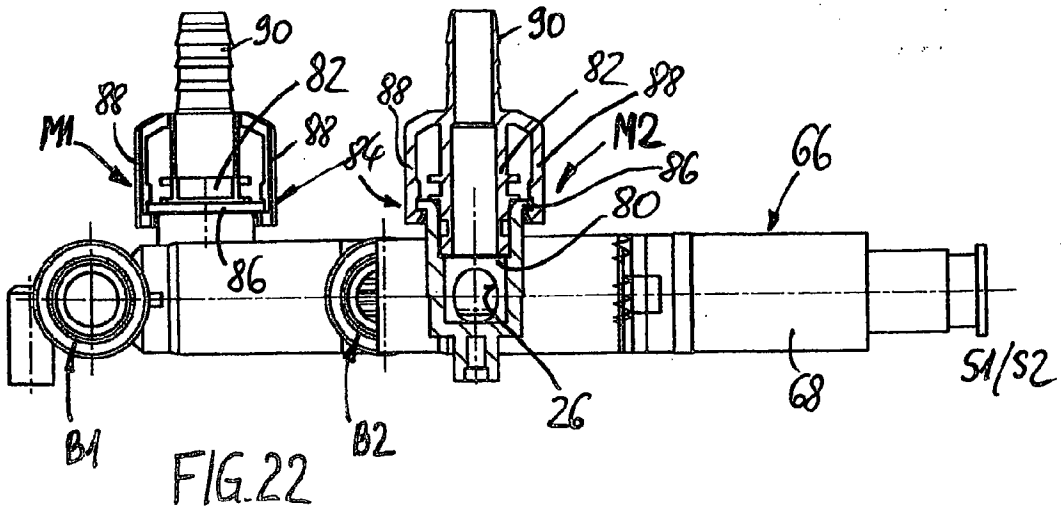
90
82
88
M1
88
84
90
88
82
88
M2
86
80
66
86
B1
B2
26
68
S1/S2

FIG.22

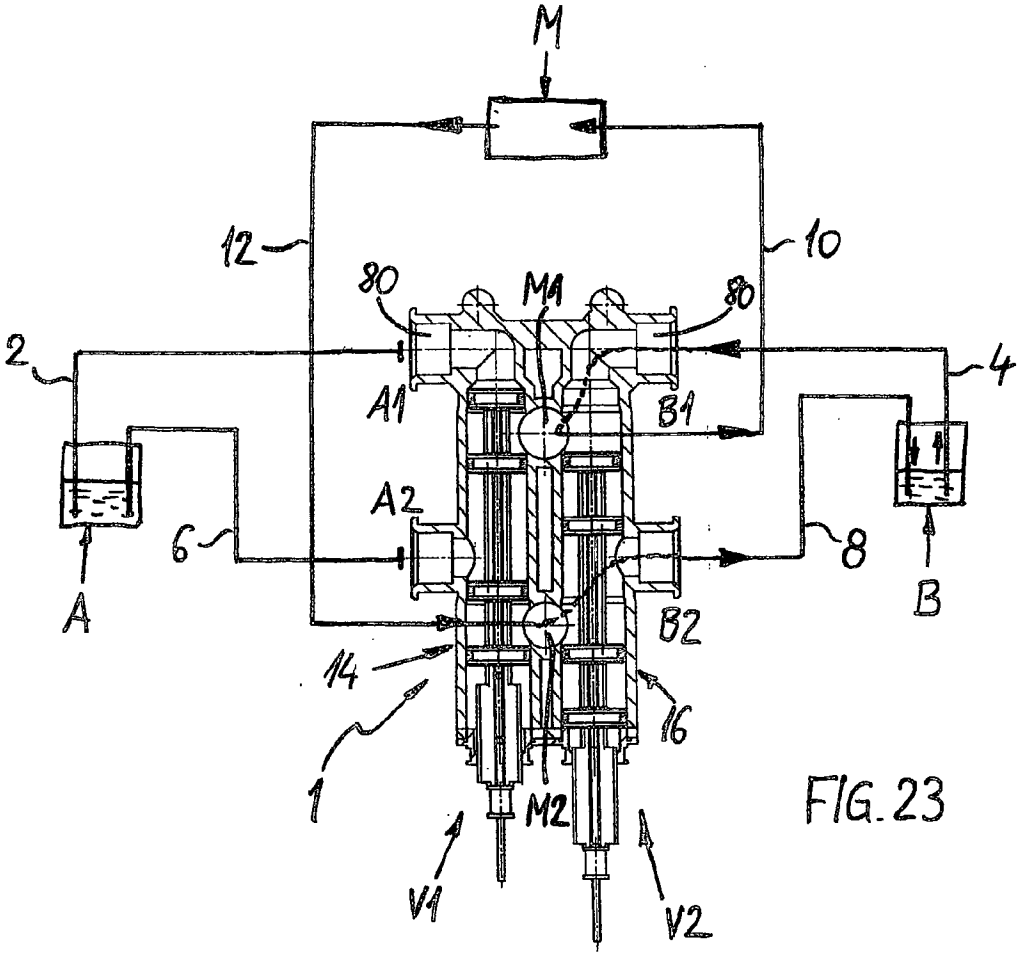
M
12
10
80
M1
80
2
4
A1
B1
A2
6
8
A
B
B2
14
16
1
M2
V1
V2

FIG.23

Espacenet

Bibliographic data: GB189800 (A) — 1923-10-11

Improvements in or relating to internal combustion engines

Inventor(s):

Applicant(s): ARNOLD SONDEREGGER ± (ARNOLD SONDEREGGER)

Classification: **- international:** ***F02M1/00***
- cooperative: **F02M1/00 (EP)**; F02M2700/4316 (EP)

Application number: GB19220032868 19221201

Priority number(s): CHX189800 19211202

Abstract of GB189800 (A)

189,800. Sonderegger, A. Dec. 2, 1921, [Convention date]. Spray carburettors - Either light fuel from the compartment 5 of the fuel tank, or a mixture of light and heavy fuel from the compartment 4, according to the position of the three-way cock 6, is supplied to the carburetting apparatus 7, the jet of which is adjustable and may be interconnected with the cock 6 to compensate automatically for the change of fuel. The light fuel may be petrol and it may be used with an equal quantity of naphtha or other raw oil.. Cylinders receiving liquid fuel.-Plates 2 for vaporizing the fuel are provided in the combustion space.

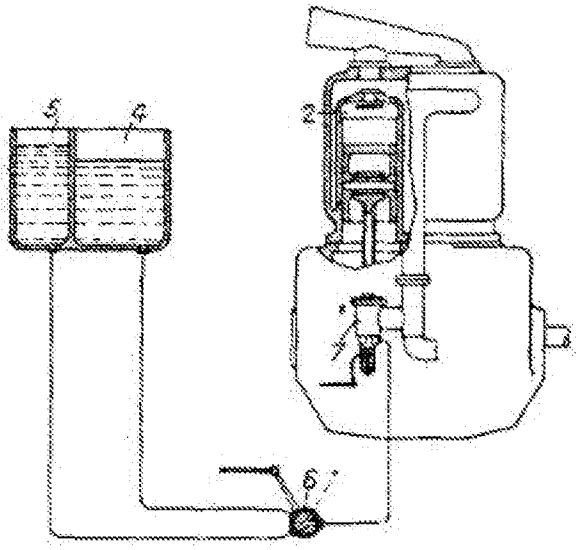

RESERVE COPY

PATENT SPECIFICATION

Convention Date (Switzerland): Dec. 2, 1921. **189,800**

Application Date (in United Kingdom): Dec. 1, 1922. No. 32,868/22.

Complete Accepted: Oct. 11, 1923.

COMPLETE SPECIFICATION.

Improvements in or relating to Internal Combustion Engines.

I, ARNOLD SONDEREGGER, of 30, Rotstrasse, Zurich, Switzerland, a citizen of the Swiss Conferation, do hereby declare the nature of this invention and in what manner the same is to be performed, to be particularly described and ascertained in and by the following statement:—

This invention relates to internal combustion engines more especially for motor cars, the main object of the invention being to provide means whereby the engines can be run on liquid fuel of two different qualities, say ordinary petrol and petrol mixed with a heavier or cheaper fluid which latter would in an ordinary way not be suitable alone (although it may in some cases be used without the petrol) in conjunction with means for preheating.

The preheating means is of that kind in which hot plates or equivalents are arranged in the combustion chambers of the engine said heater being used also with the petrol if so desired.

Briefly the invention consists in providing a double tank having outlets to a valve through which the contents of either tank can be allowed to pass to the carburetter of the engine both the said valve and the carburetter being capable of adjustment to select the desired fuel and to suit the fuel selected.

A suitable valve is one having two inlets and one outlet and provided with a plug or the like by turning which either inlet can be put into communication with the outlet, or of course the valve can be closed. The valve and the variation or adjustment of the carburetter can be effected by suitable mechanism, say levers and links of the kind operated from the dash board of the engine of the vehicle to which the invention is applied.

By means of the device operating in accordance with the method above described it is possible with a constant or even increased efficiency of the engine to operate the engine by means of a mixture of petrol and raw oil, for example 50% raw naphtha, and thus to effect a considerable saving in working expenses, and to obtain an almost smokeless combustion. It is also possible when travelling through localities where there are restrictions as to the emission of the fumes of heavy oils, to operate the engine with petrol by changing over the supply of fuel to the carburetter so as to obviate the trouble which is caused by the exhaust gases from the mixtures of petrol and raw oil.

The heating body for heating the fuel is preferably of the kind which consists of heating plates which are secured in the interior of the cylinder head and which are of such dimensions that they do not heat the mixture right up to the ignition point.

In the accompanying drawing is shown by way of example a form of construction of the subject of the invention, the example being a two cylinder engine, one cylinder being shown in section whilst the fuel tank together with the piping connecting this with the engine and the change-over cock are shown diagrammatically.

In the compression space of the cylinder 1 are provided heating plates 2 which are secured in the interior of the cylinder head. These heating plates store a portion of the heat of combustion and thus heat the freshly incoming mixture to a high temperature below the ignition temperature, whereupon after the completion of the compression stroke the ignition is effected by the usual ignition plug. The two part fuel tank 3 contains in the compartment 4 a mixture of petrol and any kind of raw or heavy oil and in the com-

[Price 1/-]

partment 5 pure petrol. The fuel supply pipes of both compartments are connected by a single pipe by the change over cock 6, which is operated from the driver's seat by suitable link work and from which a pipe leads to the carburettor 7. The carburettor illustrated is an apparatus of the known type having an adjustable jet for the fuel and the opening thereof is controlled from the driver's seat by linkwork. For changing over from petrol to the mixture and *vice versa* it suffices to operate the cock 6 and simultaneously to regulate the carburettor 7, these, for simplicity, being coupled together or even combined as a unit. The latter construction has the advantage that it is impossible to effect an incorrect adjustment. In the linkwork for the cock and for the carburettor adjusting mechanisms may be provided so as to enable a very fine adjustment to be made.

Having now particularly described and ascertained the nature of my said invention and in what manner the same is to be performed, I declare that what I claim is:—

1. An internal combustion engine of the kind provided with heaters in the combustion chambers in combination with two fuel tanks connected to a valve so that the contents of either tank can be allowed to pass through the valve to the carburettor of the engine said carburettor being adjustable for use with different liquid fuels.

2. In combination with the engine having two fuel tanks and a valve according to Claim 1 means whereby the two tanks can be selectively connected to the carburettor of the engine and in which the carburetter can be adjusted to suit either fuel, the said selection and the said adjustment being made by suitable mechanism such as links and levers, substantially as herein described.

Dated this 1st day of December, 1922.

HY. FAIRBROTHER,
Chartered Patent Agent,
30 and 32, Ludgate Hill, London, E.C. 4.

Redhill: Printed for His Majesty's Stationery Office, by Love & Malcomson, Ltd.—1923.

[This Drawing is a reproduction of the Original on a reduced scale]

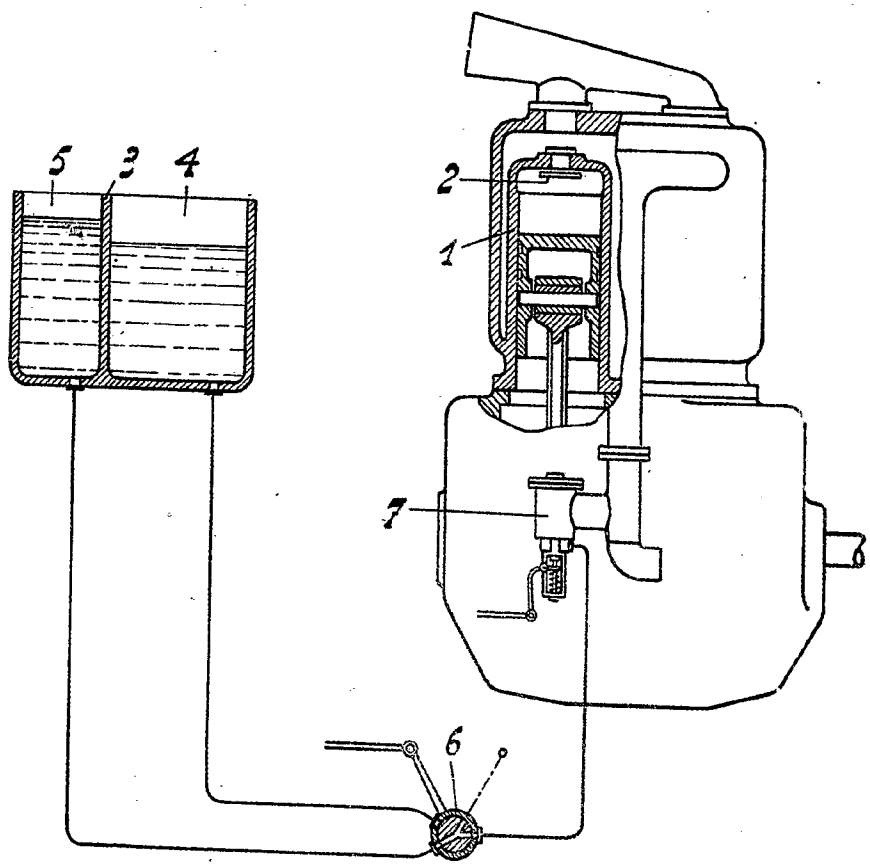

Malby & Sons, Photo-Litho

UNITED STATES PATENT AND TRADEMARK OFFICE

UNITED STATES DEPARTMENT OF COMMERCE
United States Patent and Trademark Office
Address: COMMISSIONER FOR PATENTS
P.O. Box 1450
Alexandria, Virginia 22313-1450
www.uspto.gov

APPLICATION NUMBER	FILING OR 371(C) DATE	FIRST NAMED APPLICANT	ATTY. DOCKET NO./TITLE
16/789,722	02/13/2020	Mark J. Sarder	CET1090.075

CONFIRMATION NO. 9989

26629
ZIOLKOWSKI PATENT SOLUTIONS GROUP, SC (ZPS)
136 S WISCONSIN ST
PORT WASHINGTON, WI 53074

PUBLICATION NOTICE

OC000000117668658

Title:DUAL FUEL SELECTOR SWITCH

Publication No.US-2020-0182166-A1
Publication Date:06/11/2020

NOTICE OF PUBLICATION OF APPLICATION

The above-identified application will be electronically published as a patent application publication pursuant to 37 CFR 1.211, et seq. The patent application publication number and publication date are set forth above.

The publication may be accessed through the USPTO's publically available Searchable Databases via the Internet at www.uspto.gov. The direct link to access the publication is currently http://www.uspto.gov/patft/.

The publication process established by the Office does not provide for mailing a copy of the publication to applicant. A copy of the publication may be obtained from the Office upon payment of the appropriate fee set forth in 37 CFR 1.19(a)(1). Orders for copies of patent application publications are handled by the USPTO's Public Records Division. The Public Records Division can be reached by telephone at (571) 272-3150 or (800) 972-6382, by facsimile at (571) 273-3250, by mail addressed to the United States Patent and Trademark Office, Public Records Division, Alexandria, VA 22313-1450 or via the Internet.

In addition, information on the status of the application, including the mailing date of Office actions and the dates of receipt of correspondence filed in the Office, may also be accessed via the Internet through the Patent Electronic Business Center at www.uspto.gov using the public side of the Patent Application Information and Retrieval (PAIR) system. The direct link to access this status information is currently https://portal.uspto.gov/pair/PublicPair. Prior to publication, such status information is confidential and may only be obtained by applicant using the private side of PAIR.

Further assistance in electronically accessing the publication, or about PAIR, is available by calling the Patent Electronic Business Center at 1-866-217-9197.

Office of Data Managment, Application Assistance Unit (571) 272-4000, or (571) 272-4200, or 1-888-786-0101

PATENT APPLICATION FEE DETERMINATION RECORD

Substitute for Form PTO-875

Application or Docket Number
16/789,722

APPLICATION AS FILED - PART I

FOR	(Column 1) NUMBER FILED	(Column 2) NUMBER EXTRA	SMALL ENTITY RATE($)	SMALL ENTITY FEE($)	OR	OTHER THAN SMALL ENTITY RATE($)	OTHER THAN SMALL ENTITY FEE($)
BASIC FEE (37 CFR 1.16(a), (b), or (c))	N/A	N/A	N/A	75		N/A	
SEARCH FEE (37 CFR 1.16(k), (i), or (m))	N/A	N/A	N/A	330		N/A	
EXAMINATION FEE (37 CFR 1.16(o), (p), or (q))	N/A	N/A	N/A	380		N/A	
TOTAL CLAIMS (37 CFR 1.16(i))	17 minus 20 =	*	x 50 =	0.00	OR		
INDEPENDENT CLAIMS (37 CFR 1.16(h))	2 minus 3 =	*	x 230 =	0.00			
APPLICATION SIZE FEE (37 CFR 1.16(s))	If the specification and drawings exceed 100 sheets of paper, the application size fee due is $310 ($155 for small entity) for each additional 50 sheets or fraction thereof. See 35 U.S.C. 41(a)(1)(G) and 37 CFR 1.16(s).			0.00			
MULTIPLE DEPENDENT CLAIM PRESENT (37 CFR 1.16(j))				0.00			
* If the difference in column 1 is less than zero, enter "0" in column 2.			TOTAL	785		TOTAL	

APPLICATION AS AMENDED - PART II

		(Column 1) CLAIMS REMAINING AFTER AMENDMENT		(Column 2) HIGHEST NUMBER PREVIOUSLY PAID FOR	(Column 3) PRESENT EXTRA	SMALL ENTITY RATE($)	SMALL ENTITY ADDITIONAL FEE($)	OR	OTHER THAN SMALL ENTITY RATE($)	OTHER THAN SMALL ENTITY ADDITIONAL FEE($)
AMENDMENT A	Total (37 CFR 1.16(i))	*	Minus	**	=	x =		OR	x =	
AMENDMENT A	Independent (37 CFR 1.16(h))	*	Minus	***	=	x =		OR	x =	
AMENDMENT A	Application Size Fee (37 CFR 1.16(s))									
AMENDMENT A	FIRST PRESENTATION OF MULTIPLE DEPENDENT CLAIM (37 CFR 1.16(j))							OR		
						TOTAL ADD'L FEE		OR	TOTAL ADD'L FEE	

		(Column 1) CLAIMS REMAINING AFTER AMENDMENT		(Column 2) HIGHEST NUMBER PREVIOUSLY PAID FOR	(Column 3) PRESENT EXTRA	RATE($)	ADDITIONAL FEE($)		RATE($)	ADDITIONAL FEE($)
AMENDMENT B	Total (37 CFR 1.16(i))	*	Minus	**	=	x =		OR	x =	
AMENDMENT B	Independent (37 CFR 1.16(h))	*	Minus	***	=	x =		OR	x =	
AMENDMENT B	Application Size Fee (37 CFR 1.16(s))									
AMENDMENT B	FIRST PRESENTATION OF MULTIPLE DEPENDENT CLAIM (37 CFR 1.16(j))							OR		
						TOTAL ADD'L FEE		OR	TOTAL ADD'L FEE	

* If the entry in column 1 is less than the entry in column 2, write "0" in column 3.
** If the "Highest Number Previously Paid For" IN THIS SPACE is less than 20, enter "20".
*** If the "Highest Number Previously Paid For" IN THIS SPACE is less than 3, enter "3".
The "Highest Number Previously Paid For" (Total or Independent) is the highest found in the appropriate box in column 1.

UNITED STATES PATENT AND TRADEMARK OFFICE

UNITED STATES DEPARTMENT OF COMMERCE
United States Patent and Trademark Office
Address: COMMISSIONER FOR PATENTS
P.O. Box 1450
Alexandria, Virginia 22313-1450
www.uspto.gov

APPLICATION NUMBER	FILING or 371(c) DATE	GRP ART UNIT	FIL FEE REC'D	ATTY.DOCKET.NO	TOT CLAIMS	IND CLAIMS
16/789,722	02/13/2020	3747	785	CET1090.075	17	2

CONFIRMATION NO. 9989

FILING RECEIPT

26629
ZIOLKOWSKI PATENT SOLUTIONS GROUP, SC (ZPS)
136 S WISCONSIN ST
PORT WASHINGTON, WI 53074

OC000000113072924

Date Mailed: 03/04/2020

Receipt is acknowledged of this non-provisional utility patent application. The application will be taken up for examination in due course. Applicant will be notified as to the results of the examination. Any correspondence concerning the application must include the following identification information: the U.S. APPLICATION NUMBER, FILING DATE, NAME OF FIRST INVENTOR, and TITLE OF INVENTION. Fees transmitted by check or draft are subject to collection.

Please verify the accuracy of the data presented on this receipt. If an error is noted on this Filing Receipt, please submit a written request for a corrected Filing Receipt, including a properly marked-up ADS showing the changes with strike-through for deletions and underlining for additions. If you received a "Notice to File Missing Parts" or other Notice requiring a response for this application, please submit any request for correction to this Filing Receipt with your reply to the Notice. When the USPTO processes the reply to the Notice, the USPTO will generate another Filing Receipt incorporating the requested corrections provided that the request is grantable.

Inventor(s)

Mark J. Sarder, Waukesha, WI;
Leigh Jenison, Hartland, WI;
Ian Schmit, Cedarburg, WI;

Applicant(s)

Champion Power Equipment, Inc., Santa Fe Springs, CA;

Power of Attorney: The patent practitioners associated with Customer Number 26629

Domestic Priority data as claimed by applicant

This application is a CON of 15/015,205 02/04/2016
which is a CON of 14/069,747 11/01/2013 PAT 9435273

Foreign Applications for which priority is claimed (You may be eligible to benefit from the **Patent Prosecution Highway** program at the USPTO. Please see http://www.uspto.gov for more information.) - None.
Foreign application information must be provided in an Application Data Sheet in order to constitute a claim to foreign priority. See 37 CFR 1.55 and 1.76.

Permission to Access Application via Priority Document Exchange: Yes

Permission to Access Search Results: Yes

Applicant may provide or rescind an authorization for access using Form PTO/SB/39 or Form PTO/SB/69 as appropriate.

If Required, Foreign Filing License Granted: 02/28/2020

The country code and number of your priority application, to be used for filing abroad under the Paris Convention, is **US 16/789,722**

Projected Publication Date: 06/11/2020

Non-Publication Request: No

Early Publication Request: No
**** SMALL ENTITY ****
Title

DUAL FUEL SELECTOR SWITCH

Preliminary Class

123

Statement under 37 CFR 1.55 or 1.78 for AIA (First Inventor to File) Transition Applications: No

PROTECTING YOUR INVENTION OUTSIDE THE UNITED STATES

Since the rights granted by a U.S. patent extend only throughout the territory of the United States and have no effect in a foreign country, an inventor who wishes patent protection in another country must apply for a patent in a specific country or in regional patent offices. Applicants may wish to consider the filing of an international application under the Patent Cooperation Treaty (PCT). An international (PCT) application generally has the same effect as a regular national patent application in each PCT-member country. The PCT process **simplifies** the filing of patent applications on the same invention in member countries, but **does not result** in a grant of "an international patent" and does not eliminate the need of applicants to file additional documents and fees in countries where patent protection is desired.

Almost every country has its own patent law, and a person desiring a patent in a particular country must make an application for patent in that country in accordance with its particular laws. Since the laws of many countries differ in various respects from the patent law of the United States, applicants are advised to seek guidance from specific foreign countries to ensure that patent rights are not lost prematurely.

Applicants also are advised that in the case of inventions made in the United States, the Director of the USPTO must issue a license before applicants can apply for a patent in a foreign country. The filing of a U.S. patent application serves as a request for a foreign filing license. The application's filing receipt contains further information and guidance as to the status of applicant's license for foreign filing.

Applicants may wish to consult the USPTO booklet, "General Information Concerning Patents" (specifically, the section entitled "Treaties and Foreign Patents") for more information on timeframes and deadlines for filing foreign patent applications. The guide is available either by contacting the USPTO Contact Center at 800-786-9199, or it can be viewed on the USPTO website at http://www.uspto.gov/web/offices/pac/doc/general/index.html.

For information on preventing theft of your intellectual property (patents, trademarks and copyrights), you may wish to consult the U.S. Government website, http://www.stopfakes.gov. Part of a Department of Commerce initiative, this website includes self-help "toolkits" giving innovators guidance on how to protect intellectual property in specific

countries such as China, Korea and Mexico. For questions regarding patent enforcement issues, applicants may call the U.S. Government hotline at 1-866-999-HALT (1-866-999-4258).

LICENSE FOR FOREIGN FILING UNDER

Title 35, United States Code, Section 184

Title 37, Code of Federal Regulations, 5.11 & 5.15

GRANTED

The applicant has been granted a license under 35 U.S.C. 184, if the phrase "IF REQUIRED, FOREIGN FILING LICENSE GRANTED" followed by a date appears on this form. Such licenses are issued in all applications where the conditions for issuance of a license have been met, regardless of whether or not a license may be required as set forth in 37 CFR 5.15. The scope and limitations of this license are set forth in 37 CFR 5.15(a) unless an earlier license has been issued under 37 CFR 5.15(b). The license is subject to revocation upon written notification. The date indicated is the effective date of the license, unless an earlier license of similar scope has been granted under 37 CFR 5.13 or 5.14.

This license is to be retained by the licensee and may be used at any time on or after the effective date thereof unless it is revoked. This license is automatically transferred to any related applications(s) filed under 37 CFR 1.53(d). This license is not retroactive.

The grant of a license does not in any way lessen the responsibility of a licensee for the security of the subject matter as imposed by any Government contract or the provisions of existing laws relating to espionage and the national security or the export of technical data. Licensees should apprise themselves of current regulations especially with respect to certain countries, of other agencies, particularly the Office of Defense Trade Controls, Department of State (with respect to Arms, Munitions and Implements of War (22 CFR 121-128)); the Bureau of Industry and Security, Department of Commerce (15 CFR parts 730-774); the Office of Foreign AssetsControl, Department of Treasury (31 CFR Parts 500+) and the Department of Energy.

NOT GRANTED

No license under 35 U.S.C. 184 has been granted at this time, if the phrase "IF REQUIRED, FOREIGN FILING LICENSE GRANTED" DOES NOT appear on this form. Applicant may still petition for a license under 37 CFR 5.12, if a license is desired before the expiration of 6 months from the filing date of the application. If 6 months has lapsed from the filing date of this application and the licensee has not received any indication of a secrecy order under 35 U.S.C. 181, the licensee may foreign file the application pursuant to 37 CFR 5.15(b).

SelectUSA

The United States represents the largest, most dynamic marketplace in the world and is an unparalleled location for business investment, innovation, and commercialization of new technologies. The U.S. offers tremendous resources and advantages for those who invest and manufacture goods here. Through SelectUSA, our nation works to promote and facilitate business investment. SelectUSA provides information assistance to the international investor community; serves as an ombudsman for existing and potential investors; advocates on behalf of U.S. cities, states, and regions competing for global investment; and counsels U.S. economic development organizations on investment attraction best practices. To learn more about why the United States is the best country in the world to develop

technology, manufacture products, deliver services, and grow your business, visit http://www.SelectUSA.gov or call +1-202-482-6800.

Doc Code: PA..
Document Description: Power of Attorney

PTO/AIA/82A (07-13)
Approved for use through 11/30/2014. OMB 0651-0051
U.S. Patent and Trademark Office; U.S. DEPARTMENT OF COMMERCE
Under the Paperwork Reduction Act of 1995, no persons are required to respond to a collection of information unless it displays a valid OMB control number.

TRANSMITTAL FOR POWER OF ATTORNEY TO ONE OR MORE REGISTERED PRACTITIONERS

NOTE: This form is to be submitted with the Power of Attorney by Applicant form (PTO/AIA/82B) to identify the application to which the Power of Attorney is directed, in accordance with 37 CFR 1.5, unless the application number and filing date are identified in the Power of Attorney by Applicant form. If neither form PTO/AIA/82A nor form PTO/AIA82B identifies the application to which the Power of Attorney is directed, the Power of Attorney will not be recognized in the application.

Application Number	
Filing Date	
First Named Inventor	Mark J. Sarder
Title	DUAL FUEL SELECTOR SWITCH
Art Unit	
Examiner Name	
Attorney Docket Number	CET1090.075

SIGNATURE of Applicant or Patent Practitioner

Signature	/Kevin R. Rosin/	Date (Optional)	2020-02-13
Name	Kevin R. Rosin	Registration Number	55584
Title (if Applicant is a juristic entity)	Patent Practitioner		
Applicant Name (if Applicant is a juristic entity)	Champion Power Equipment, Inc.		

NOTE: This form must be signed in accordance with 37 CFR 1.33. See 37 CFR 1.4(d) for signature requirements and certifications. If more than one applicant, use multiple forms.

☑ *Total of 1 forms are submitted.

This collection of information is required by 37 CFR 1.131, 1.32, and 1.33. The information is required to obtain or retain a benefit by the public which is to file (and by the USPTO to process) an application. Confidentiality is governed by 35 U.S.C. 122 and 37 CFR 1.11 and 1.14. This collection is estimated to take 3 minutes to complete, including gathering, preparing, and submitting the completed application form to the USPTO. Time will vary depending upon the individual case. Any comments on the amount of time you require to complete this form and/or suggestions for reducing this burden, should be sent to the Chief Information Officer, U.S. Patent and Trademark Office, U.S. Department of Commerce, P.O. Box 1450, Alexandria, VA 22313-1450. DO NOT SEND FEES OR COMPLETED FORMS TO THIS ADDRESS. **SEND TO: Commissioner for Patents, P.O. Box 1450, Alexandria, VA 22313-1450.**

If you need assistance in completing the form, call 1-800-PTO-9199 and select option 2.

Doc Code: PA..
Document Description: Power of Attorney

PTO/AIA/82B (07-13)
Approved for use through 01/31/2018. OMB 0651-0035
U.S. Patent and Trademark Office; U.S. DEPARTMENT OF COMMERCE
Under the Paperwork Reduction Act of 1995, no persons are required to respond to a collection of information unless it displays a valid OMB control number

POWER OF ATTORNEY BY APPLICANT

I hereby revoke all previous powers of attorney given in the application identified in either the attached transmittal letter or the boxes below.

Application Number	Filing Date

(Note: The boxes above may be left blank if information is provided on form PTO/AIA/82A.)

☑ I hereby appoint the Patent Practitioner(s) associated with the following Customer Number as my/our attorney(s) or agent(s), and to transact all business in the United States Patent and Trademark Office connected therewith for the application referenced in the attached transmittal letter (form PTO/AIA/82A) or identified above: 26629

OR

☐ I hereby appoint Practitioner(s) named in the attached list (form PTO/AIA/82C) as my/our attorney(s) or agent(s), and to transact all business in the United States Patent and Trademark Office connected therewith for the patent application referenced in the attached transmittal letter (form PTO/AIA/82A) or identified above. (Note: Complete form PTO/AIA/82C.)

Please recognize or change the correspondence address for the application identified in the attached transmittal letter or the boxes above to:

☑ The address associated with the above-mentioned Customer Number

OR

☐ The address associated with Customer Number:

OR

☐ Firm or Individual Name					
Address					
City		State		Zip	
Country					
Telephone		Email			

I am the Applicant (if the Applicant is a juristic entity, list the Applicant name in the box):

☐ Inventor or Joint Inventor (title not required below)

☐ Legal Representative of a Deceased or Legally Incapacitated Inventor (title not required below)

☑ Assignee or Person to Whom the Inventor is Under an Obligation to Assign (provide signer's title if applicant is a juristic entity)

☐ Person Who Otherwise Shows Sufficient Proprietary Interest (e.g., a petition under 37 CFR 1.46(b)(2) was granted in the application or is concurrently being filed with this document) (provide signer's title if applicant is a juristic entity)

SIGNATURE of Applicant for Patent

The undersigned (whose title is supplied below) is authorized to act on behalf of the applicant (e.g., where the applicant is a juristic entity).

Signature		Date (Optional)	01-05-2019
Name	Dennis Trine		
Title	Chief Executive Officer, Champion Power Equipment, Inc.		

NOTE: Signature - This form must be signed by the applicant in accordance with 37 CFR 1.33. See 37 CFR 1.4 for signature requirements and certifications. If more than one applicant, use multiple forms.

☑ Total of 1 forms are submitted.

This collection of information is required by 37 CFR 1.131, 1.32, and 1.33. The information is required to obtain or retain a benefit by the public which is to file (and by the USPTO to process) an application. Confidentiality is governed by 35 U.S.C. 122 and 37 CFR 1.11 and 1.14. This collection is estimated to take 3 minutes to complete, including gathering, preparing, and submitting the completed application form to the USPTO. Time will vary depending upon the individual case. Any comments on the amount of time you require to complete this form and/or suggestions for reducing this burden, should be sent to the Chief Information Officer, U.S. Patent and Trademark Office, U.S. Department of Commerce, P.O. Box 1450, Alexandria, VA 22313-1450. DO NOT SEND FEES OR COMPLETED FORMS TO THIS ADDRESS. **SEND TO: Commissioner for Patents, P.O. Box 1450, Alexandria, VA 22313-1450.**

If you need assistance in completing the form, call 1-800-PTO-9199 and select option 2.

Electronic Patent Application Fee Transmittal

Application Number:	
Filing Date:	
Title of Invention:	DUAL FUEL SELECTOR SWITCH
First Named Inventor/Applicant Name:	Mark J. Sarder
Filer:	Kevin Roger Rosin./Robyn Templin
Attorney Docket Number:	CET1090.075

Filed as Small Entity

Filing Fees for Utility under 35 USC 111(a)

Description	Fee Code	Quantity	Amount	Sub-Total in USD($)
Basic Filing:				
UTILITY FILING FEE (ELECTRONIC FILING)	4011	1	75	75
UTILITY SEARCH FEE	2111	1	330	330
UTILITY EXAMINATION FEE	2311	1	380	380
Pages:				
Claims:				
Miscellaneous-Filing:				
Petition:				
Patent-Appeals-and-Interference:				

Description	Fee Code	Quantity	Amount	Sub-Total in USD($)
Post-Allowance-and-Post-Issuance:				
Extension-of-Time:				
Miscellaneous:				
			Total in USD ($)	**785**

Electronic Acknowledgement Receipt

EFS ID:	38578037
Application Number:	16789722
International Application Number:	
Confirmation Number:	9989
Title of Invention:	DUAL FUEL SELECTOR SWITCH
First Named Inventor/Applicant Name:	Mark J. Sarder
Customer Number:	26629
Filer:	Kevin Roger Rosin./Robyn Templin
Filer Authorized By:	Kevin Roger Rosin.
Attorney Docket Number:	CET1090.075
Receipt Date:	13-FEB-2020
Filing Date:	
Time Stamp:	12:49:35
Application Type:	Utility under 35 USC 111(a)

Payment information:

Submitted with Payment	yes
Payment Type	CARD
Payment was successfully received in RAM	$785
RAM confirmation Number	E20202CC50488467
Deposit Account	
Authorized User	

The Director of the USPTO is hereby authorized to charge indicated fees and credit any overpayment as follows:

File Listing:

Document Number	Document Description	File Name	File Size(Bytes)/ Message Digest	Multi Part /.zip	Pages (if appl.)
1	Application Data Sheet	App-ADS.pdf	1795929 381a5c6cdbdc78a77e6eefd6f0e287ebac9a7c7f	no	9
Warnings:					
Information:					
2		App-Body.pdf	507623 63617b438c543b603f984f466fc4fc6e0832f8f2	yes	18

Multipart Description/PDF files in .zip description

Document Description	Start	End
Specification	1	13
Claims	14	17
Abstract	18	18

Warnings:					
Information:					
3	Oath or Declaration filed	App-Dec.pdf	931296 9ffe4d49325af401840bb44c77ddd7ffd48fd7ef	no	3
Warnings:					
Information:					
4	Drawings-only black and white line drawings	App-Drawings.pdf	3782381 d2d167efb0e0086e8eb5c9fd4d886817010f6f82	no	6
Warnings:					
Information:					
5	Power of Attorney	POATransmittal.pdf	156618 0284dcbdf2eae1ae9f1dadf8c1a1a032b48dddf5	no	1

Warnings:					
Information:					
6	Power of Attorney	GeneralPOA.pdf	544821 bd74c375383840c5c68c688e757b3083add0a4e7	no	1
Warnings:					
Information:					
7	Fee Worksheet (SB06)	fee-info.pdf	35211 c6128d1e1e9aae932d5c8507b9c9f70180a94d92	no	2
Warnings:					
Information:					
			Total Files Size (in bytes):	7753879	

This Acknowledgement Receipt evidences receipt on the noted date by the USPTO of the indicated documents, characterized by the applicant, and including page counts, where applicable. It serves as evidence of receipt similar to a Post Card, as described in MPEP 503.

<u>New Applications Under 35 U.S.C. 111</u>
If a new application is being filed and the application includes the necessary components for a filing date (see 37 CFR 1.53(b)-(d) and MPEP 506), a Filing Receipt (37 CFR 1.54) will be issued in due course and the date shown on this Acknowledgement Receipt will establish the filing date of the application.
<u>National Stage of an International Application under 35 U.S.C. 371</u>
If a timely submission to enter the national stage of an international application is compliant with the conditions of 35 U.S.C. 371 and other applicable requirements a Form PCT/DO/EO/903 indicating acceptance of the application as a national stage submission under 35 U.S.C. 371 will be issued in addition to the Filing Receipt, in due course.
<u>New International Application Filed with the USPTO as a Receiving Office</u>
If a new international application is being filed and the international application includes the necessary components for an international filing date (see PCT Article 11 and MPEP 1810), a Notification of the International Application Number and of the International Filing Date (Form PCT/RO/105) will be issued in due course, subject to prescriptions concerning national security, and the date shown on this Acknowledgement Receipt will establish the international filing date of the application.

PTO/AIA/14 (11-15)
Approved for use through 04/30/2017. OMB 0651-0032
U.S. Patent and Trademark Office; U.S. DEPARTMENT OF COMMERCE
Under the Paperwork Reduction Act of 1995, no persons are required to respond to a collection of information unless it contains a valid OMB control number.

Application Data Sheet 37 CFR 1.76	Attorney Docket Number	CET1090.075
	Application Number	
Title of Invention	DUAL FUEL SELECTOR SWITCH	

The application data sheet is part of the provisional or nonprovisional application for which it is being submitted. The following form contains the bibliographic data arranged in a format specified by the United States Patent and Trademark Office as outlined in 37 CFR 1.76.
This document may be completed electronically and submitted to the Office in electronic format using the Electronic Filing System (EFS) or the document may be printed and included in a paper filed application.

Secrecy Order 37 CFR 5.2:

☐ Portions or all of the application associated with this Application Data Sheet may fall under a Secrecy Order pursuant to 37 CFR 5.2 (Paper filers only. Applications that fall under Secrecy Order may not be filed electronically.)

Inventor Information:

Inventor 1 Remove

Legal Name

Prefix	Given Name	Middle Name	Family Name	Suffix
	Mark	J.	Sarder	

Residence Information (Select One) ● US Residency Non US Residency Active US Military Service

City	Waukesha	State/Province	WI	Country of Residence i	US

Mailing Address of Inventor:

Address 1	W245 N5551 Corporate Circle
Address 2	
City	Sussex
State/Province	WI
Postal Code	53089
Country i	US

Inventor 2 Remove

Legal Name

Prefix	Given Name	Middle Name	Family Name	Suffix
	Leigh		Jenison	

Residence Information (Select One) ◉ US Residency Non US Residency Active US Military Service

City	Hartland	State/Province	WI	Country of Residence i	US

Mailing Address of Inventor:

Address 1	W245 N5551 Corporate Circle
Address 2	
City	Sussex
State/Province	WI
Postal Code	53089
Country i	US

Inventor 3 Remove

Legal Name

Prefix	Given Name	Middle Name	Family Name	Suffix
	Ian		Schmit	

Residence Information (Select One) ◉ US Residency Non US Residency Active US Military Service

Under the Paperwork Reduction Act of 1995, no persons are required to respond to a collection of information unless it contains a valid OMB control number.

Application Data Sheet 37 CFR 1.76	Attorney Docket Number	CET1090.075
	Application Number	
Title of Invention	DUAL FUEL SELECTOR SWITCH	

City	Cedarburg	State/Province	WI	Country of Residence i	US

Mailing Address of Inventor:

Address 1	W245 N5551 Corporate Circle		
Address 2			
City	Sussex	**State/Province**	WI
Postal Code	53089	**Country** i	US

All Inventors Must Be Listed - Additional Inventor Information blocks may be generated within this form by selecting the **Add** button. Add

Correspondence Information:

Enter either Customer Number or complete the Correspondence Information section below. For further information see 37 CFR 1.33(a).

☐ **An Address is being provided for the correspondence Information of this application.**

Customer Number	26629		
Email Address		Add Email	Remove Email

Application Information:

Title of the Invention	DUAL FUEL SELECTOR SWITCH		
Attorney Docket Number	CET1090.075	**Small Entity Status Claimed**	☒
Application Type	Nonprovisional		
Subject Matter	Utility		
Total Number of Drawing Sheets (if any)		**Suggested Figure for Publication (if any)**	

Filing By Reference:

Only complete this section when filing an application by reference under 35 U.S.C. 111(c) and 37 CFR 1.57(a). Do not complete this section if application papers including a specification and any drawings are being filed. Any domestic benefit or foreign priority information must be provided in the appropriate section(s) below (i.e., "Domestic Benefit/National Stage Information" and "Foreign Priority Information").

For the purposes of a filing date under 37 CFR 1.53(b), the description and any drawings of the present application are replaced by this reference to the previously filed application, subject to conditions and requirements of 37 CFR 1.57(a).

Application number of the previously filed application	Filing date (YYYY-MM-DD)	Intellectual Property Authority or Country i

Publication Information:

☐ Request Early Publication (Fee required at time of Request 37 CFR 1.219)

☐ **Request Not to Publish.** I hereby request that the attached application not be published under 35 U.S.C. 122(b) and certify that the invention disclosed in the attached application **has not and will not** be the subject of an application filed in another country, or under a multilateral international agreement, that requires publication at eighteen months after filing.

Under the Paperwork Reduction Act of 1995, no persons are required to respond to a collection of information unless it contains a valid OMB control number.

Application Data Sheet 37 CFR 1.76	Attorney Docket Number	CET1090.075
	Application Number	
Title of Invention	DUAL FUEL SELECTOR SWITCH	

Representative Information:

Representative information should be provided for all practitioners having a power of attorney in the application. Providing this information in the Application Data Sheet does not constitute a power of attorney in the application (see 37 CFR 1.32).
Either enter Customer Number or complete the Representative Name section below. If both sections are completed the customer Number will be used for the Representative Information during processing.

Please Select One:	● Customer Number	US Patent Practitioner	◯ Limited Recognition (37 CFR 11.9)
Customer Number	26629		

Domestic Benefit/National Stage Information:

This section allows for the applicant to either claim benefit under 35 U.S.C. 119(e), 120, 121, 365(c), or 386(c) or indicate National Stage entry from a PCT application. Providing benefit claim information in the Application Data Sheet constitutes the specific reference required by 35 U.S.C. 119(e) or 120, and 37 CFR 1.78.
When referring to the current application, please leave the "Application Number" field blank.

Prior Application Status	Pending		Remove
Application Number	Continuity Type	Prior Application Number	Filing or 371(c) Date (YYYY-MM-DD)
	Continuation of	15015205	2016-02-04
Prior Application Status	Patented		Remove

Application Number	Continuity Type	Prior Application Number	Filing Date (YYYY-MM-DD)	Patent Number	Issue Date (YYYY-MM-DD)
15015205	Continuation of	14069747	2013-11-01	9435273	2016-09-06

Additional Domestic Benefit/National Stage Data may be generated within this form by selecting the **Add** button. Add

Foreign Priority Information:

This section allows for the applicant to claim priority to a foreign application. Providing this information in the application data sheet constitutes the claim for priority as required by 35 U.S.C. 119(b) and 37 CFR 1.55. When priority is claimed to a foreign application that is eligible for retrieval under the priority document exchange program (PDX)[i] the information will be used by the Office to automatically attempt retrieval pursuant to 37 CFR 1.55(i)(1) and (2). Under the PDX program, applicant bears the ultimate responsibility for ensuring that a copy of the foreign application is received by the Office from the participating foreign intellectual property office, or a certified copy of the foreign priority application is filed, within the time period specified in 37 CFR 1.55(g)(1).

Under the Paperwork Reduction Act of 1995, no persons are required to respond to a collection of information unless it contains a valid OMB control number.

Application Data Sheet 37 CFR 1.76	Attorney Docket Number	CET1090.075
	Application Number	
Title of Invention	DUAL FUEL SELECTOR SWITCH	

Remove

Application Number	Country[i]	Filing Date (YYYY-MM-DD)	Access Code[j] (if applicable)

Additional Foreign Priority Data may be generated within this form by selecting the **Add** button. Add

Statement under 37 CFR 1.55 or 1.78 for AIA (First Inventor to File) Transition Applications

☐ This application (1) claims priority to or the benefit of an application filed before March 16, 2013 and (2) also contains, or contained at any time, a claim to a claimed invention that has an effective filing date on or after March 16, 2013.
NOTE: By providing this statement under 37 CFR 1.55 or 1.78, this application, with a filing date on or after March 16, 2013, will be examined under the first inventor to file provisions of the AIA.

Under the Paperwork Reduction Act of 1995, no persons are required to respond to a collection of information unless it contains a valid OMB control number.

Application Data Sheet 37 CFR 1.76	Attorney Docket Number	CET1090.075
	Application Number	
Title of Invention	DUAL FUEL SELECTOR SWITCH	

Authorization or Opt-Out of Authorization to Permit Access:

When this Application Data Sheet is properly signed and filed with the application, applicant has provided written authority to permit a participating foreign intellectual property (IP) office access to the instant application-as-filed (see paragraph A in subsection 1 below) and the European Patent Office (EPO) access to any search results from the instant application (see paragraph B in subsection 1 below).

Should applicant choose not to provide an authorization identified in subsection 1 below, applicant **must opt-out** of the authorization by checking the corresponding box A or B or both in subsection 2 below.

NOTE: This section of the Application Data Sheet is **ONLY** reviewed and processed with the **INITIAL** filing of an application. After the initial filing of an application, an Application Data Sheet cannot be used to provide or rescind authorization for access by a foreign IP office(s). Instead, Form PTO/SB/39 or PTO/SB/69 must be used as appropriate.

1. Authorization to Permit Access by a Foreign Intellectual Property Office(s)

A. Priority Document Exchange (PDX) - Unless box A in subsection 2 (opt-out of authorization) is checked, the undersigned hereby **grants the USPTO authority** to provide the European Patent Office (EPO), the Japan Patent Office (JPO), the Korean Intellectual Property Office (KIPO), the State Intellectual Property Office of the People's Republic of China (SIPO), the World Intellectual Property Organization (WIPO), and any other foreign intellectual property office participating with the USPTO in a bilateral or multilateral priority document exchange agreement in which a foreign application claiming priority to the instant patent application is filed, access to: (1) the instant patent application-as-filed and its related bibliographic data, (2) any foreign or domestic application to which priority or benefit is claimed by the instant application and its related bibliographic data, and (3) the date of filing of this Authorization. See 37 CFR 1.14(h)(1).

B. Search Results from U.S. Application to EPO - Unless box B in subsection 2 (opt-out of authorization) is checked, the undersigned hereby **grants the USPTO authority** to provide the EPO access to the bibliographic data and search results from the instant patent application when a European patent application claiming priority to the instant patent application is filed. See 37 CFR 1.14(h)(2).

The applicant is reminded that the EPO's Rule 141(1) EPC (European Patent Convention) requires applicants to submit a copy of search results from the instant application without delay in a European patent application that claims priority to the instant application.

2. Opt-Out of Authorizations to Permit Access by a Foreign Intellectual Property Office(s)

☐ A. Applicant **DOES NOT** authorize the USPTO to permit a participating foreign IP office access to the instant application-as-filed. If this box is checked, the USPTO will not be providing a participating foreign IP office with any documents and information identified in subsection 1A above.

☐ B. Applicant **DOES NOT** authorize the USPTO to transmit to the EPO any search results from the instant patent application. If this box is checked, the USPTO will not be providing the EPO with search results from the instant application.

NOTE: Once the application has published or is otherwise publicly available, the USPTO may provide access to the application in accordance with 37 CFR 1.14.

Under the Paperwork Reduction Act of 1995, no persons are required to respond to a collection of information unless it contains a valid OMB control number.

Application Data Sheet 37 CFR 1.76	Attorney Docket Number	CET1090.075
	Application Number	
Title of Invention	DUAL FUEL SELECTOR SWITCH	

Applicant Information:

Providing assignment information in this section does not substitute for compliance with any requirement of part 3 of Title 37 of CFR to have an assignment recorded by the Office.

Applicant 1 Remove

If the applicant is the inventor (or the remaining joint inventor or inventors under 37 CFR 1.45), this section should not be completed. The information to be provided in this section is the name and address of the legal representative who is the applicant under 37 CFR 1.43; or the name and address of the assignee, person to whom the inventor is under an obligation to assign the invention, or person who otherwise shows sufficient proprietary interest in the matter who is the applicant under 37 CFR 1.46. If the applicant is an applicant under 37 CFR 1.46 (assignee, person to whom the inventor is obligated to assign, or person who otherwise shows sufficient proprietary interest) together with one or more joint inventors, then the joint inventor or inventors who are also the applicant should be identified in this section.

Clear

● Assignee	Legal Representative under 35 U.S.C. 117	Joint Inventor
Person to whom the inventor is obligated to assign.	Person who shows sufficient proprietary interest	

If applicant is the legal representative, indicate the authority to file the patent application, the inventor is:

Name of the Deceased or Legally Incapacitated Inventor:

If the Applicant is an Organization check here. ☒

Organization Name	Champion Power Equipment, Inc.		
Mailing Address Information For Applicant:			
Address 1	12039 Smith Avenue		
Address 2			
City	Santa Fe Springs	**State/Province**	CA
Country	US	Postal Code	90670
Phone Number		Fax Number	
Email Address			

Additional Applicant Data may be generated within this form by selecting the Add button. Add

Assignee Information including Non-Applicant Assignee Information:

Providing assignment information in this section does not substitute for compliance with any requirement of part 3 of Title 37 of CFR to have an assignment recorded by the Office.

Under the Paperwork Reduction Act of 1995, no persons are required to respond to a collection of information unless it contains a valid OMB control number.

Application Data Sheet 37 CFR 1.76	Attorney Docket Number	CET1090.075
	Application Number	
Title of Invention	DUAL FUEL SELECTOR SWITCH	

Assignee 1

Complete this section if assignee information, including non-applicant assignee information, is desired to be included on the patent application publication. An assignee-applicant identified in the "Applicant Information" section will appear on the patent application publication as an applicant. For an assignee-applicant, complete this section only if identification as an assignee is also desired on the patent application publication.

Remove

If the Assignee or Non-Applicant Assignee is an Organization check here. ☐

Prefix	**Given Name**	Middle Name	**Family Name**	Suffix

Mailing Address Information For Assignee including Non-Applicant Assignee:

Address 1			
Address 2			
City		**State/Province**	
Country i		Postal Code	
Phone Number		Fax Number	
Email Address			

Additional Assignee or Non-Applicant Assignee Data may be generated within this form by selecting the Add button. Add

Signature:

Remove

NOTE: This Application Data Sheet must be signed in accordance with 37 CFR 1.33(b). **However, if this Application Data Sheet is submitted with the INITIAL filing of the application and either box A or B is not checked in subsection 2 of the "Authorization or Opt-Out of Authorization to Permit Access" section, then this form must also be signed in accordance with 37 CFR 1.14(c).**

This Application Data Sheet **must** be signed by a patent practitioner if one or more of the applicants is a **juristic entity** (e.g., corporation or association). If the applicant is two or more joint inventors, this form must be signed by a patent practitioner, **all** joint inventors who are the applicant, or one or more joint inventor-applicants who have been given power of attorney (e.g., see USPTO Form PTO/AIA/81) on behalf of **all** joint inventor-applicants.

See 37 CFR 1.4(d) for the manner of making signatures and certifications.

Signature	/Kevin R. Rosin/			Date (YYYY-MM-DD)	2020-02-13
First Name	Kevin R.	Last Name	Rosin	Registration Number	55584

Additional Signature may be generated within this form by selecting the Add button. Add

Under the Paperwork Reduction Act of 1995, no persons are required to respond to a collection of information unless it contains a valid OMB control number.

Application Data Sheet 37 CFR 1.76	Attorney Docket Number	CET1090.075
	Application Number	
Title of Invention	DUAL FUEL SELECTOR SWITCH	

This collection of information is required by 37 CFR 1.76. The information is required to obtain or retain a benefit by the public which is to file (and by the USPTO to process) an application. Confidentiality is governed by 35 U.S.C. 122 and 37 CFR 1.14. This collection is estimated to take 23 minutes to complete, including gathering, preparing, and submitting the completed application data sheet form to the USPTO. Time will vary depending upon the individual case. Any comments on the amount of time you require to complete this form and/or suggestions for reducing this burden, should be sent to the Chief Information Officer, U.S. Patent and Trademark Office, U.S. Department of Commerce, P.O. Box 1450, Alexandria, VA 22313-1450. DO NOT SEND FEES OR COMPLETED FORMS TO THIS ADDRESS. **SEND TO: Commissioner for Patents, P.O. Box 1450, Alexandria, VA 22313-1450.**

Privacy Act Statement

The Privacy Act of 1974 (P.L. 93-579) requires that you be given certain information in connection with your submission of the attached form related to a patent application or patent. Accordingly, pursuant to the requirements of the Act, please be advised that: (1) the general authority for the collection of this information is 35 U.S.C. 2(b)(2); (2) furnishing of the information solicited is voluntary; and (3) the principal purpose for which the information is used by the U.S. Patent and Trademark Office is to process and/or examine your submission related to a patent application or patent. If you do not furnish the requested information, the U.S. Patent and Trademark Office may not be able to process and/or examine your submission, which may result in termination of proceedings or abandonment of the application or expiration of the patent.

The information provided by you in this form will be subject to the following routine uses:

1 The information on this form will be treated confidentially to the extent allowed under the Freedom of Information Act (5 U.S.C. 552) and the Privacy Act (5 U.S.C. 552a). Records from this system of records may be disclosed to the Department of Justice to determine whether the Freedom of Information Act requires disclosure of these records.

2. A record from this system of records may be disclosed, as a routine use, in the course of presenting evidence to a court, magistrate, or administrative tribunal, including disclosures to opposing counsel in the course of settlement negotiations.

3 A record in this system of records may be disclosed, as a routine use, to a Member of Congress submitting a request involving an individual, to whom the record pertains, when the individual has requested assistance from the Member with respect to the subject matter of the record.

4. A record in this system of records may be disclosed, as a routine use, to a contractor of the Agency having need for the information in order to perform a contract. Recipients of information shall be required to comply with the requirements of the Privacy Act of 1974, as amended, pursuant to 5 U.S.C. 552a(m).

5. A record related to an International Application filed under the Patent Cooperation Treaty in this system of records may be disclosed, as a routine use, to the International Bureau of the World Intellectual Property Organization, pursuant to the Patent CooperationTreaty.

6. A record in this system of records may be disclosed, as a routine use, to another federal agency for purposes of National Security review (35 U.S.C. 181) and for review pursuant to the Atomic Energy Act (42 U.S.C. 218(c)).

7. A record from this system of records may be disclosed, as a routine use, to the Administrator, General Services, or his/her designee, during an inspection of records conducted by GSA as part of that agency's responsibility to recommend improvements in records management practices and programs, under authority of 44 U.S.C. 2904 and 2906. Such disclosure shall be made in accordance with the GSA regulations governing inspection of records for this purpose, and any other relevant (i.e., GSA or Commerce) directive. Such disclosure shall not be used to make determinations about individuals.

8. A record from this system of records may be disclosed, as a routine use, to the public after either publication of the application pursuant to 35 U.S.C. 122(b) or issuance of a patent pursuant to 35 U.S.C. 151. Further, a record may be disclosed, subject to the limitations of 37 CFR 1.14, as a routine use, to the public if the record was filed in an application which became abandoned or in which the proceedings were terminated and which application is referenced by either a published application, an application open to public inspections or an issued patent.

9. A record from this system of records may be disclosed, as a routine use, to a Federal, State, or local law enforcement agency, if the USPTO becomes aware of a violation or potential violation of law or regulation.

DUAL FUEL SELECTOR SWITCH

CROSS-REFERENCE TO RELATED APPLICATION

[0001] The present application is a continuation of, and claims priority to, U.S. Patent Application Serial No. 15/015,205, filed on February 4, 2016, which is a continuation of, and claims priority to, U.S. Patent Application Serial No. 14/069,747, filed on November 1, 2013, now U.S. Patent No. 9,435,273, issued September 6, 2016, the disclosures of which are incorporated herein by reference in their entirety.

BACKGROUND OF THE INVENTION

[0002] Embodiments of the invention relate generally to dual fuel generators and, more particularly, to a selector switch for use on a dual fuel generator that is configured to ensure that only one type of fuel may be in use at a given time in the generator.

[0003] Engine-driven, electrical generators are used in a wide variety of applications. Typically, an electrical generator utilizes a single driving engine directly coupled to a generator or alternator through a common shaft. Upon activation of the generator, a fuel and air mixture is provided to the combustion chambers of corresponding cylinders of the engine. The fuel mixture in each combustion chamber is ignited causing an explosion within the cylinders. The explosive forces within the combustion chambers in the cylinders cause linear motion of the pistons within their corresponding cylinders. The linear motion of the pistons is converted into rotational motion by a crankshaft that, in turn, drives the alternator. As is conventional, the driven alternator generates electrical power.

[0004] Certain generators are defined as "dual fuel" generators that include an engine having the ability to be fueled with either of two fuels, such as either gasoline or liquefied petroleum gas (LPG), for example. These "dual fuel" engines may selectively operate on gasoline or LPG as desired and controlled by an operator, such as being operated on LPG/gasoline for a first period of operation and selectively switching over to the other of LPG/gasoline for another period of operation, with such a switching of fuels being controlled as desired by an operator. Typical dual fuel generators utilize

separate valves for each fuel type, such as an LPG valve and a gasoline valve, to control flow of the respective fuels to the engine. While the existence of two separate valves allows one fuel type to have its valve "on" while the other has its valve "off," there is nothing to prevent both valves from being "on" at the same time. As such, it is possible for both valves to be in the "on" position, which can lead to a potentially unsafe condition resulting from the mixture of the fuels.

[0005] Therefore, it would be desirable to provide a dual fuel generator with a selector switch that would prohibit the mixing of two differing types of fuels. It would further be desirable for such a selector switch to inhibit positioning/actuation of the valves in such a manner that the valve for a first fuel source is prevented from being "on" when the valve for a second fuel source is "on", and vice versa.

BRIEF DESCRIPTION OF THE INVENTION

[0006] In accordance with one aspect of the invention, a fuel selector for use with a dual fuel generator includes a selector plate, a first fuel valve assembly positioned adjacent the selector plate and actuatable between an ON position and an OFF position to selectively control a first fuel flow to an engine of the dual fuel generator, and a second fuel valve assembly positioned adjacent the selector plate and actuatable between an ON position and an OFF position to selectively control a second fuel flow to the engine of the dual fuel generator. The fuel selector also includes a selector switch coupled to the selector plate so as to be linearly translatable from a first position to a second position, wherein translation of the selector switch between the first and second positions enables positioning of only one of the first fuel valve assembly and the second fuel valve assembly in the ON position at a given time, such that the first and second fuel valve assemblies cannot be in the ON position concurrently.

[0007] In accordance with another aspect of the invention, a method of controlling fuel flow in a dual fuel generator includes providing a first fuel valve assembly to control fuel flow from a first fuel source to an internal combustion engine of the dual fuel generator, the first fuel valve assembly including a first fuel valve handle movable between an ON position and an OFF position to control fuel flow from the first fuel source to the internal combustion engine. The method also includes providing a second fuel valve assembly to control fuel flow from a second fuel source to the internal combustion engine of the dual fuel generator, the second fuel valve assembly including a second fuel valve handle movable between an ON position and an OFF position to control fuel flow from the second fuel source to the internal combustion engine. The method further includes providing a fuel selector switch adjacent the first fuel valve assembly and the second fuel valve assembly such that the fuel selector switch is translatable to a first position and a section position, wherein the fuel selector switch is translatable between the first position and the section position to selectively inhibit actuation of the first fuel valve handle and the second fuel valve handle, so as to prevent a simultaneous flow of fuels from the first and second fuel sources to the internal combustion engine.

[0008] In accordance with yet another aspect of the invention, a dual fuel generator includes a first fuel source, a second fuel source, and an internal combustion engine coupled to the first fuel source and the second fuel source to selectively receive fuel therefrom. The dual fuel generator also includes a fuel selector configured to control a flow of fuel from the first and second fuel sources to the internal combustion engine, with the fuel selector comprising a first fuel valve assembly including a first fuel valve and a first fuel valve handle that is actuatable between an open position and a closed position to selectively open and close the first fuel valve, a second fuel valve assembly including a second fuel valve and a second fuel valve handle that is actuatable between an open position and a closed position to selectively open and close the second fuel valve, a selector plate having the first fuel valve assembly and the second fuel valve assembly coupled to a front side thereof, and a selector switch slideably coupled to the selector plate so as to be movable from a first position to a second position. Positioning of the selector switch in the first position causes the selector switch to cover the second fuel valve handle so as to prevent the second fuel valve handle from moving to the open position and positioning of the selector switch in the second position causes the selector switch to cover the first fuel valve handle so as to prevent the first fuel valve handle from moving to the open position.

[0009] These and other advantages and features will be more readily understood from the following detailed description of preferred embodiments of the invention that is provided in connection with the accompanying drawings.

BRIEF DESCRIPTION OF THE DRAWINGS

[0010] The drawings illustrate embodiments presently contemplated for carrying out the invention.

[0011] In the drawings:

[0012] FIG. 1 is a perspective view of a dual fuel generator, according to an embodiment of the invention.

[0013] FIG. 2 is a partial view of the dual fuel generator of FIG. 1, according to an embodiment of the invention

[0014] FIG. 3 is a front perspective view of a fuel selector for use with the dual fuel generator of FIG. 1, according to an embodiment of the invention.

[0015] FIG. 4 is a front perspective view of a selector switch for use with the fuel selector of FIG. 3, according to an embodiment of the invention.

[0016] FIG. 5 is a front perspective view of the fuel selector of FIG. 3 with the selector switch in a first position, according to an embodiment of the invention.

[0017] FIG. 6 is a front perspective view of the fuel selector of FIG. 3 with the selector switch in a second position, according to an embodiment of the invention.

DETAILED DESCRIPTION

[0018] Referring first to FIGS. 1 and 2, a dual fuel generator 10 is illustrated, according to an embodiment of the invention – with a perspective view of the generator 10 being shown in FIG. 1 and a more detailed partial view of the generator 10 being shown in FIG. 2 to further illustrate features thereof. Dual fuel generator 10 includes an internal combustible engine 12 operatively connected to an alternator 14 in a conventional manner. The engine 12 includes pistons (not shown) that are slideably received within corresponding cylinders (not shown) thereof, with each cylinder further including an intake valve for admitting a fuel-air mixture and an exhaust valve for venting exhaust gases following combustion. The fuel-air mixture is provided by a carburetor 16 that includes a movable throttle, with a position of the throttle regulating the amount of fuel and air admitted into the cylinders and thus the speed and power developed by the engine 12 when the air-fuel mixture is ignited to generate reciprocal movement of the pistons. The reciprocal movement of the pistons of engine 12 is translated to rotational movement by a crankshaft (not shown) that, in turn, drives the alternator 14, so as to generate an electrical output power from the generator 10.

[0019] As the generator 10 is a dual fuel generator, the engine 12 is designed to use different fuels from either a first fuel source 18 or a second fuel source 20. In an exemplary embodiment of the invention, first fuel source 18 supplies a liquefied petroleum gas (LPG) to the engine 12 and second fuel source 20 supplies gasoline to the engine 12, with the generator 10 selectively operating on LPG or gasoline as desired and controlled by an operator, such as for example operating on LPG for a first period of operation and then switching over to gasoline for another period of operation. However, it is contemplated that the first fuel source 18 and/or second fuel source 20 may be other types of fuel sources (e.g., natural gas, biodiesel, etc.), according to additional embodiments of the invention – and thus the scope of the invention is not meant to be limited strictly to a gasoline-LPG dual fuel embodiment.

[0020] For selectively controlling the flow of gasoline and LPG to the engine 12, dual fuel generator 10 includes a fuel selector 22 constructed to provide for selection of

a desired fuel source 18, 20 for supplying fuel to engine 12. The fuel selector 22 not only provides for selection of a desired fuel source 18, 20 for supplying fuel to engine 12, but also selectively restricts the selection of a fuel source so as to enable the use of only one fuel at a time. As a result, fuel from first fuel source 18 cannot flow to engine 12 while fuel from second fuel source 20 is flowing to engine 12, and vice versa.

[0021] The fuel selector 22 of generator 10 is shown in greater detail in FIGS. 3-6 according to an embodiment of the invention. In general, the fuel selector 22 includes a first valve assembly 24, a second valve assembly 26, a selector plate 28, a selector switch 30, and a carburetor solenoid switch 32. These elements of the fuel selector 22 collectively function to provide for selective control of a fuel flow (of gasoline or LPG) to the engine 12, with the fuel selector 22 enabling selection of a desired fuel source 18, 20 to provide a fuel flow therefrom while also inhibiting the selection of the other fuel source 18, 20 so as to prevent a fuel flow therefrom, thereby enabling only a single fuel to flow to the engine 12 at one time.

[0022] Referring first to FIG. 3, a front view of fuel selector 22 is shown with selector switch 30 removed therefrom, so as to best illustrate the construction of the first valve assembly 24 and the second valve assembly 26. The first valve assembly 24 and the second valve assembly 26 are attached, respectively, to first fuel source 18 and second fuel source 20 to selectively control a flow of fuel from the fuel sources to the engine 12. First valve assembly 24 includes a first fuel valve handle 34 that is operatively connected to a first fuel valve 36 to control an opening and closing of the first fuel valve. Similarly, second valve assembly 26 includes a second fuel valve handle 38 that is operatively connected to a second fuel valve 40 to control an opening and closing of the second fuel valve.

[0023] Each of the first valve assembly 24 and the second valve assembly 26 are movable between an ON position and an OFF position to control opening and closing of their respective fuel valve. More specifically, first and second fuel valve handles 34, 38 are movable between an ON position and an OFF position, with the fuel valves 36, 40 being open (to enable fuel flow to the engine 12) when their respective fuel valve

handle 34, 38 is in the ON position and being closed (to prevent fuel flow to the engine 12) when their respective fuel valve handle 34, 38 is in the OFF position. Thus, when first fuel valve handle 34 is in an ON position, first fuel valve 36 is open and allows the fuel from first fuel source 18 to flow to the engine 12, and when second fuel valve handle 38 is in an ON position, second fuel valve 40 is open and allows the fuel from second fuel source 20 to flow to the engine 12.

[0024] In the preferred embodiments of the invention, first valve assembly 24 and second valve assembly 26 are located adjacent to each other on the same horizontal plane or parallel horizontal planes. In such an embodiment, first valve assembly 24 is in the ON position when first fuel valve handle 34 is moved to a vertical orientation/position and first valve assembly 24 is in an OFF position when first fuel valve handle 34 is moved to a horizontal orientation/position. Similarly, second valve assembly 26 is in the ON position when second fuel valve handle 38 is moved to a vertical orientation/position second valve assembly 26 is in an OFF position when second fuel valve handle 38 is moved to a horizontal orientation/position. It is recognized, however, that an alternative embodiment of the invention may have first valve assembly 24 and second valve assembly 26 located adjacent to each other on the same vertical plane or parallel vertical planes. One having ordinary skill in the art would recognize that in such an alternative embodiment of the invention, first and second valve assemblies 24 would be in the ON position when their respective fuel valve handles 34, 38 are horizontal, and would be in the OFF position when their respective fuel valve handles 34, 38 are vertical.

[0025] As shown in FIG. 3, first valve assembly 24 and second valve assembly 26 are positioned adjacent to the selector plate 28 of fuel selector 22. The selector plate 28 may be integrally formed as part of a larger outer frame assembly of generator 10 or may be an insert attachable to such a frame assembly. Openings 42 are formed in selector plate 28 so as to accommodate positioning of the first valve assembly 24 and second valve assembly 26 – with the openings 42 enabling positioning of first and second fuel valve handles 34, 38 in front of selector plate 28, such that they may be actuated by an operator of the generator 10 in order to open/close their respective valves

36, 40. Selector plate 28 also includes slots or grooves 44 formed therein that are positioned both above and below the first and second fuel valve handles 34, 38, with the slots 44 extending generally in a lengthwise fashion along a length of the selector plate 28. Each of the slots 44 is configured to receive a protrusion or flange formed on selector switch 30, such that the selector switch 30 can be slideably coupled to the selector plate 28 – with the selector switch 30 being translatable in a linear fashion by way of its mating with the slots 44.

[0026] Detailed views of the selector switch 30 and of its mating with the selector plate 28 are shown in FIGS. 4-6. Referring first to FIG. 4, the general structure of selector switch 30 is shown according to an exemplary embodiment. Protrusions or flanges 46 are formed on each of top and bottom surfaces of the selector switch 30 that are configured to mate with the corresponding slots 44 formed in selector plate 28 (FIG. 3). The protrusions 46 may be flexible so as to accommodate coupling of the selector switch 30 to the selector plate 28. A front surface 48 of selector switch 30 includes finger-hold depressions 50 formed therein that accommodate the fingers of an operator, with the finger-holds providing a convenient feature by which the operator can operate (i.e., slide) the selector switch 30. A back surface 52 of the selector switch 30 includes a groove or channel 54 formed therein having a width and depth sufficient to receive the first and second fuel valve handles 34, 38 therein when in their horizontal position (i.e., the OFF position). The groove 54 is further sized and configured such that the first and second fuel valve handles 34, 38 will not fit therein when in their vertical position (i.e., the ON position).

[0027] Positioning of the selector switch 30 relative to the selector plate 28 and first and second valve assemblies 24, 26 is shown in FIGS. 5 and 6. As shown therein, positioning of the first valve assembly 24 and second valve assembly 26 adjacent selector plate 28 – and on the same horizontal plane - provides for selective positioning of the selector switch 30 relative to the fuel valve handles 34, 38 in what are generally referred to hereafter as a first position and a second position 56, 58. The selector switch 30 is translatable in a horizontal motion – via a sliding motion within slots 44 of the selector plate 28 – from the first position 56 (FIG. 5) to the second position 58 (FIG.

6) to selectively restrict actuation of the first and second fuel valve handles 34, 38. As the groove 54 formed in selector switch 30 is configured such that the first and second fuel valve handles 34, 38 will not fit therein when in their vertical position (i.e., the ON position), it is recognized that in order to translate the selector switch 30 back and forth between the first and second positions 56, 58, both of the fuel valve handles 34, 38 must be in their horizontal OFF position.

[0028] In FIG. 5, selector switch 30 is illustrated in the first position 56. When selector switch 30 is in first position 56, selector switch 30 covers second fuel valve handle 38, and groove 54 formed on the back surface 52 of the fuel selector switch 30 locks second fuel valve handle 38 in an OFF position, so as to prohibit the second valve assembly 26 from moving to the ON position. Further, when selector switch 30 is in first position 56, first valve assembly 24 is able to move freely between the ON position and the OFF position, with the first fuel valve handle 34 being actuatable by the operator. In one embodiment of the invention, when first valve assembly 24 is in the ON position, first fuel valve handle 34 is in a vertical position and prevents selector switch 30 from moving horizontally from first position 56 to second position 58.

[0029] In operation, when selector switch 30 is moved from second position 58 into first position 56, second fuel valve handle 38 slides into the groove 54 formed in selector switch 30. As a result, when selector switch 30 is in first position 56, second fuel valve handle 38 is unable to move, as it is locked in place by groove 54, and second valve assembly 26 is locked in the OFF position, with movement from the OFF position to the ON position being prohibited.

[0030] IN FIG. 6, selector switch 30 is illustrated in the second position 58. When selector switch 30 is in second position 58, selector switch 30 covers first fuel valve handle 34, and groove 54 formed on the back surface 52 of the fuel selector switch 30 locks first fuel valve handle 34 in an OFF position, so as to prohibit the first valve assembly 24 from moving to the ON position. In addition, when selector switch 30 is in second position 58, second valve assembly 26 is able to freely move between the ON position and the OFF position, with the second fuel valve handle 38 being actuatable by

the operator. In one embodiment of the invention, when second valve assembly 26 is in the ON position, second fuel valve handle 38 is in a vertical position and prevents selector switch 30 from moving horizontally from second position 58 to first position 56.

[0031] In operation, when selector switch 30 is moved from first position 56 into second position 58, first fuel valve handle 34 slides into groove 54 formed in selector switch 30. Therefore, when selector switch 30 is in second position 58, first fuel valve handle 34 is unable to move, as it is locked in place by groove 54, and first valve assembly 24 is locked in the OFF position, with movement from the OFF position to the ON position being prohibited.

[0032] Referring still now to FIG. 6, according to an exemplary embodiment of the invention, the fuel selector 22 of generator 10 further comprises a carburetor solenoid switch 32 that is positioned within an opening 60 formed in selector plate 28 so as to extend therethrough and is further positioned adjacent second valve assembly 26 (i.e., second fuel valve handle 38. As solenoid switch 32 is located adjacent to the second valve assembly 26 – which is in turn connected to the gasoline fuel source 20 - selector switch 30 covers and triggers solenoid switch 32 when slid from the second position 58 to the first position 56 – by depressing the solenoid switch 32 as it comes in contact therewith. When solenoid switch 32 is triggered, a carburetor shutoff solenoid operatively connected to the solenoid switch 32 is activated and shuts off the flow of gasoline to the carburetor 16 (FIG. 2). In the preferred embodiment of the invention, solenoid switch 32 is a depressible switch, but it is contemplated that solenoid switch 32 may be another type of switch that can be activated via interaction with selector switch 30 or via interaction with either valve handle 34, 38, so as to activate the carburetor shutoff solenoid.

[0033] Beneficially, the design of the fuel selector 22 and of the selector switch 30 described herein prevents differing fuels from two separate fuel sources from flowing to the engine of a dual fuel generator at the same time. The interaction of the selector switch 30 with the first and second fuel valve assemblies 24, 26 – with the selector

switch 30 sliding back and forth to selectively cover/engage first and second fuel valve assemblies 24, 26 - prohibits both valve assemblies from being in the "ON" position at the same time. The selector switch 30 is thus a foolproof device that prevents the mixing of fuels so as to provide additional safety to the usage of dual fuel generators.

[0034] Therefore, according to one embodiment of the invention, a fuel selector for use with a dual fuel generator includes a selector plate, a first fuel valve assembly positioned adjacent the selector plate and actuatable between an ON position and an OFF position to selectively control a first fuel flow to an engine of the dual fuel generator, and a second fuel valve assembly positioned adjacent the selector plate and actuatable between an ON position and an OFF position to selectively control a second fuel flow to the engine of the dual fuel generator. The fuel selector also includes a selector switch coupled to the selector plate so as to be linearly translatable from a first position to a second position, wherein translation of the selector switch between the first and second positions enables positioning of only one of the first fuel valve assembly and the second fuel valve assembly in the ON position at a given time, such that the first and second fuel valve assemblies cannot be in the ON position concurrently.

[0035] According to another embodiment of the invention, a method of controlling fuel flow in a dual fuel generator includes providing a first fuel valve assembly to control fuel flow from a first fuel source to an internal combustion engine of the dual fuel generator, the first fuel valve assembly including a first fuel valve handle movable between an ON position and an OFF position to control fuel flow from the first fuel source to the internal combustion engine. The method also includes providing a second fuel valve assembly to control fuel flow from a second fuel source to the internal combustion engine of the dual fuel generator, the second fuel valve assembly including a second fuel valve handle movable between an ON position and an OFF position to control fuel flow from the second fuel source to the internal combustion engine. The method further includes providing a fuel selector switch adjacent the first fuel valve assembly and the second fuel valve assembly such that the fuel selector switch is translatable to a first position and a section position, wherein the fuel selector switch is translatable between the first position and the section position to selectively inhibit

actuation of the first fuel valve handle and the second fuel valve handle, so as to prevent a simultaneous flow of fuels from the first and second fuel sources to the internal combustion engine.

[0036] According to yet another embodiment of the invention, a dual fuel generator includes a first fuel source, a second fuel source, and an internal combustion engine coupled to the first fuel source and the second fuel source to selectively receive fuel therefrom. The dual fuel generator also includes a fuel selector configured to control a flow of fuel from the first and second fuel sources to the internal combustion engine, with the fuel selector comprising a first fuel valve assembly including a first fuel valve and a first fuel valve handle that is actuatable between an open position and a closed position to selectively open and close the first fuel valve, a second fuel valve assembly including a second fuel valve and a second fuel valve handle that is actuatable between an open position and a closed position to selectively open and close the second fuel valve, a selector plate having the first fuel valve assembly and the second fuel valve assembly coupled to a front side thereof, and a selector switch slideably coupled to the selector plate so as to be movable from a first position to a second position. Positioning of the selector switch in the first position causes the selector switch to cover the second fuel valve handle so as to prevent the second fuel valve handle from moving to the open position and positioning of the selector switch in the second position causes the selector switch to cover the first fuel valve handle so as to prevent the first fuel valve handle from moving to the open position.

[0037] While the invention has been described in connection with only a limited number of embodiments, it should be readily understood that the invention is not limited to such disclosed embodiments. Rather, the invention can be modified to incorporate any number of variations, alterations, substitutions or equivalent arrangements not heretofore described, but which are commensurate with the spirit and scope of the invention. Additionally, while various embodiments of the invention have been described, it is to be understood that aspects of the invention may include only some of the described embodiments. Accordingly, the invention is not to be seen as limited by the foregoing description, but is only limited by the scope of the appended claims.

CLAIMS

WHAT IS CLAIMED IS:

1. A fuel selector for use with a dual fuel generator, the fuel selector comprising:

a valve assembly fluidly connected to each of a first fuel source and a second fuel source, the valve assembly being operable to selectively control a first fuel flow and a second fuel flow from the first fuel source and the second fuel source, respectively, to an engine of the dual fuel generator; and

a selector switch positioned on the valve assembly to allow a user to manually select one of the first fuel flow and the second fuel flow;

wherein the valve assembly comprises:

two fuel inputs, with a first fuel input connected to the first fuel source and a second fuel input connected to the second fuel source; and

two fuel outputs for selectively supplying fuel to the engine from the first fuel source or the second fuel source.

2. The fuel selector of claim 1 wherein the two fuel outputs selectively supply fuel to the engine from only one of the first fuel source or the second fuel source, responsive to selection of the first fuel flow or the second fuel flow via the selector switch, and a corresponding operation of the valve assembly.

3. The fuel selector of claim 1 wherein the valve assembly comprises:

a first fuel valve having open and closed positions to selectively control the first fuel flow to the engine; and

a second fuel valve having open and closed positions to selectively control the second fuel flow to the engine.

4. The fuel selector of claim 3 wherein the first fuel valve and the second fuel valve are non-solenoid, mechanical valves.

5. The fuel selector of claim 2 wherein the selector switch provides for manual actuation of the first fuel valve and the second fuel valve between the open and closed positions.

6. The fuel selector of claim 1 further comprising a carburetor solenoid switch configured to activate an associated carburetor solenoid when actuated.

7. The fuel selector of claim 6 wherein, when the selector switch is in a first position, the selector switch actuates the carburetor solenoid switch, so as to activate the carburetor solenoid and stop the second fuel flow to the engine.

8. The fuel selector of claim 6 wherein, when the selector switch is in a second position, the carburetor solenoid allows the second fuel flow to the engine.

9. The fuel selector of claim 1 wherein the first fuel source is a liquefied petroleum gas (LPG) fuel source and wherein the second fuel source is a gasoline source.

10. A fuel selector of a dual fuel generator comprising:

a selector switch having a first fuel mode and a second fuel mode;

a solenoid switch having open and closed positions; and

a fuel solenoid having open and closed positions;

wherein, when the selector switch is in the first fuel mode, the solenoid switch and the fuel solenoid are in the closed positions and, when the selector switch is in the second fuel mode, the solenoid switch and the fuel solenoid are in the open positions.

11. The fuel selector of claim 10 wherein the selector switch triggers the solenoid switch when changed from the second fuel mode to the first fuel mode, so as to cause the solenoid switch and the fuel solenoid to operate in the closed positions.

12. The fuel selector of claim 10 further comprising:

a valve assembly fluidly connected to each of a first fuel source and a second fuel source, the valve assembly being operable to selectively control a first fuel flow and a second fuel flow from the first fuel source and the second fuel source, respectively, to an engine of the dual fuel generator; and

wherein positioning of the selector switch in the first fuel mode and the second fuel mode enables a selection of one of the first fuel flow and the second fuel flow.

13. The fuel selector of claim 12 wherein the valve assembly is positioned on or adjacent the selector switch.

14. The fuel selector of claim 12 wherein the valve assembly comprises:

two fuel inputs, with a first fuel input connected to the first fuel source and a second fuel input connected to the second fuel source; and

two fuel outputs for selectively supplying fuel to the engine from the first fuel source or the second fuel source.

15. The fuel selector of claim 14 wherein the two fuel outputs selectively supply fuel to the engine from only one of the first fuel source or the second fuel source, responsive to selection of the first fuel flow or the second fuel flow via the selector switch and a corresponding operation of the valve assembly.

16. The fuel selector of claim 14 wherein the valve assembly comprises:

a first fuel valve having open and closed positions to selectively control the first fuel flow to the engine; and

a second fuel valve having open and closed positions to selectively control the second fuel flow to the engine.

17. The fuel selector of claim 12 wherein the first fuel source is a liquefied petroleum gas (LPG) fuel source and wherein the second fuel source is a gasoline source.

ABSTRACT

A fuel selector for use with a dual fuel generator includes a selector plate, a first fuel valve assembly positioned adjacent the selector plate and actuatable between an ON position and an OFF position to selectively control a first fuel flow to an engine of the dual fuel generator, and a second fuel valve assembly positioned adjacent the selector plate and actuatable between an ON position and an OFF position to selectively control a second fuel flow to the engine of the dual fuel generator. A selector switch coupled to the selector plate is linearly translatable from a first position to a second position, so as to enable positioning of only one of the first fuel valve assembly and the second fuel valve assembly in the ON position at a given time, such that the first and second fuel valve assemblies cannot be in the ON position concurrently.

DECLARATION (37 CFR 1.63) FOR UTILITY OR DESIGN APPLICATION USING AN APPLICATION DATA SHEET (37 CFR 1.76)

Title of Invention	DUAL FUEL SELECTOR SWITCH

As the below named inventor, I hereby declare that:

This declaration is directed to:

☑ The attached application, or

☐ United States application or PCT international application number _____

filed on _____

The above-identified application was made or authorized to be made by me.

I believe that I am the original inventor or an original joint inventor of a claimed invention in the application.

I hereby acknowledge that any willful false statement made in this declaration is punishable under 18 U.S.C. 1001 by fine or imprisonment of not more than five (5) years, or both.

WARNING:

Petitioner/applicant is cautioned to avoid submitting personal information in documents filed in a patent application that may contribute to identity theft. Personal information such as social security numbers, bank account numbers, or credit card numbers (other than a check or credit card authorization form PTO-2038 submitted for payment purposes) is never required by the USPTO to support a petition or an application. If this type of personal information is included in documents submitted to the USPTO, petitioners/applicants should consider redacting such personal information from the documents before submitting them to the USPTO. Petitioner/applicant is advised that the record of a patent application is available to the public after publication of the application (unless a non-publication request in compliance with 37 CFR 1.213(a) is made in the application) or issuance of a patent. Furthermore, the record from an abandoned application may also be available to the public if the application is referenced in a published application or an issued patent (see 37 CFR 1.14). Checks and credit card authorization forms PTO-2038 submitted for payment purposes are not retained in the application file and therefore are not publicly available.

LEGAL NAME OF INVENTOR

Inventor: Mark J. Sarder Date (Optional): 13/10/31

Signature: Mark Sarder

Note: An application data sheet (PTO/SB/14 or equivalent), including naming the entire inventive entity, must accompany this form. Use an additional PTO/AIA/01 form for each additional inventor.

DECLARATION (37 CFR 1.63) FOR UTILITY OR DESIGN APPLICATION USING AN APPLICATION DATA SHEET (37 CFR 1.76)

Title of Invention	DUAL FUEL SELECTOR SWITCH

As the below named inventor, I hereby declare that:

This declaration is directed to:

☑ The attached application, or

☐ United States application or PCT international application number _____

filed on _____

The above-identified application was made or authorized to be made by me.

I believe that I am the original inventor or an original joint inventor of a claimed invention in the application.

I hereby acknowledge that any willful false statement made in this declaration is punishable under 18 U.S.C. 1001 by fine or imprisonment of not more than five (5) years, or both.

WARNING:

Petitioner/applicant is cautioned to avoid submitting personal information in documents filed in a patent application that may contribute to identity theft. Personal information such as social security numbers, bank account numbers, or credit card numbers (other than a check or credit card authorization form PTO-2038 submitted for payment purposes) is never required by the USPTO to support a petition or an application. If this type of personal information is included in documents submitted to the USPTO, petitioners/applicants should consider redacting such personal information from the documents before submitting them to the USPTO. Petitioner/applicant is advised that the record of a patent application is available to the public after publication of the application (unless a non-publication request in compliance with 37 CFR 1.213(a) is made in the application) or issuance of a patent. Furthermore, the record from an abandoned application may also be available to the public if the application is referenced in a published application or an issued patent (see 37 CFR 1.14). Checks and credit card authorization forms PTO-2038 submitted for payment purposes are not retained in the application file and therefore are not publicly available.

LEGAL NAME OF INVENTOR

Inventor: Leigh Jenison Date (Optional): 10·31·2013

Signature: Leigh Jenison

Note: An application data sheet (PTO/SB/14 or equivalent), including naming the entire inventive entity, must accompany this form. Use an additional PTO/AIA/01 form for each additional inventor.

DECLARATION (37 CFR 1.63) FOR UTILITY OR DESIGN APPLICATION USING AN APPLICATION DATA SHEET (37 CFR 1.76)

Title of Invention	DUAL FUEL SELECTOR SWITCH

As the below named inventor, I hereby declare that:

This declaration is directed to:

☑ The attached application, or

☐ United States application or PCT international application number _____

filed on _____

The above-identified application was made or authorized to be made by me.

I believe that I am the original inventor or an original joint inventor of a claimed invention in the application.

I hereby acknowledge that any willful false statement made in this declaration is punishable under 18 U.S.C. 1001 by fine or imprisonment of not more than five (5) years, or both.

WARNING:

Petitioner/applicant is cautioned to avoid submitting personal information in documents filed in a patent application that may contribute to identity theft. Personal information such as social security numbers, bank account numbers, or credit card numbers (other than a check or credit card authorization form PTO-2038 submitted for payment purposes) is never required by the USPTO to support a petition or an application. If this type of personal information is included in documents submitted to the USPTO, petitioners/applicants should consider redacting such personal information from the documents before submitting them to the USPTO. Petitioner/applicant is advised that the record of a patent application is available to the public after publication of the application (unless a non-publication request in compliance with 37 CFR 1.213(a) is made in the application) or issuance of a patent. Furthermore, the record from an abandoned application may also be available to the public if the application is referenced in a published application or an issued patent (see 37 CFR 1.14). Checks and credit card authorization forms PTO-2038 submitted for payment purposes are not retained in the application file and therefore are not publicly available.

LEGAL NAME OF INVENTOR

Inventor: Ian Schmit Date (Optional): 10/31/13

Signature: Ian N Schmit

Note: An application data sheet (PTO/SB/14 or equivalent), including naming the entire inventive entity, must accompany this form. Use an additional PTO/AIA/01 form for each additional inventor.

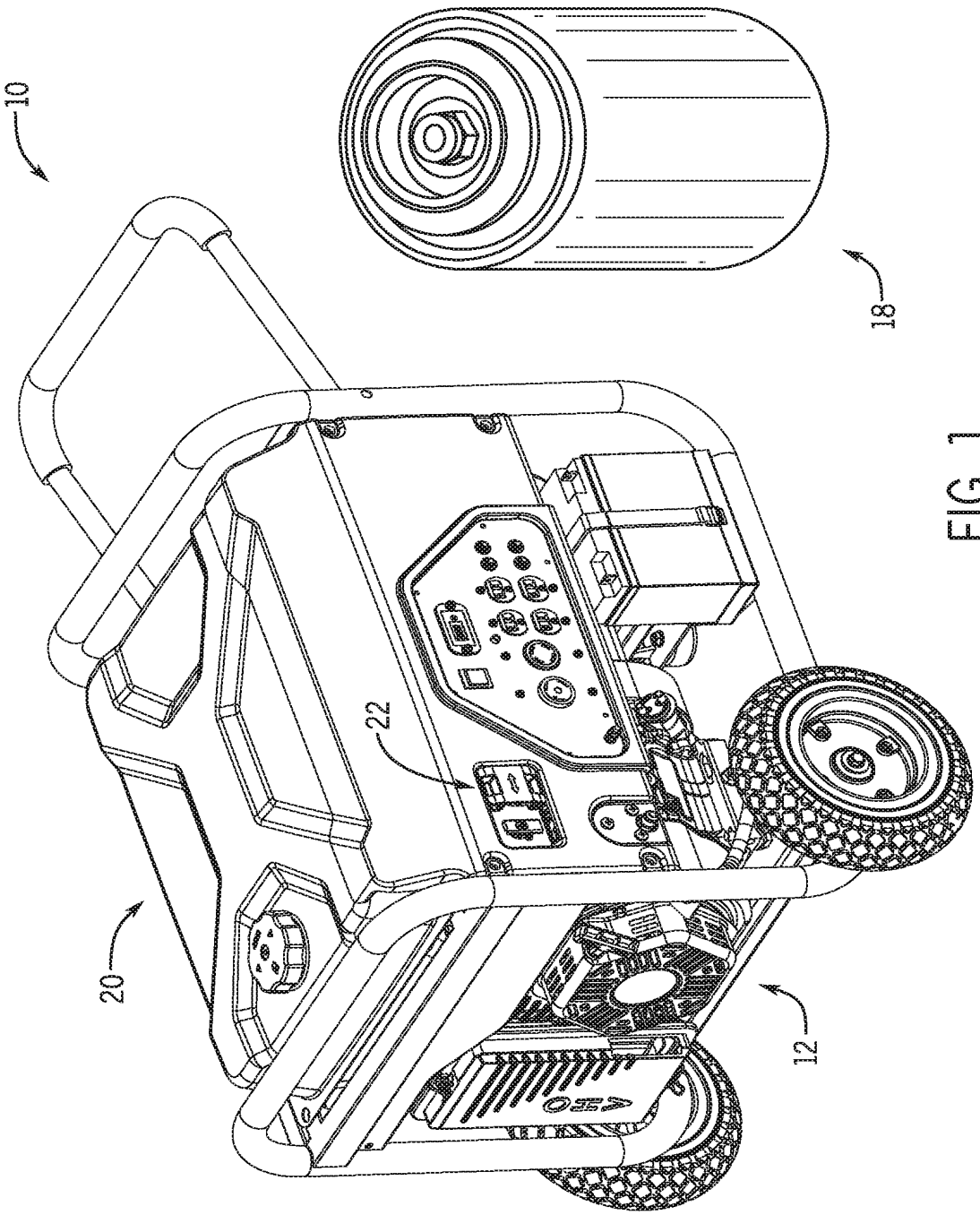

FIG. 1

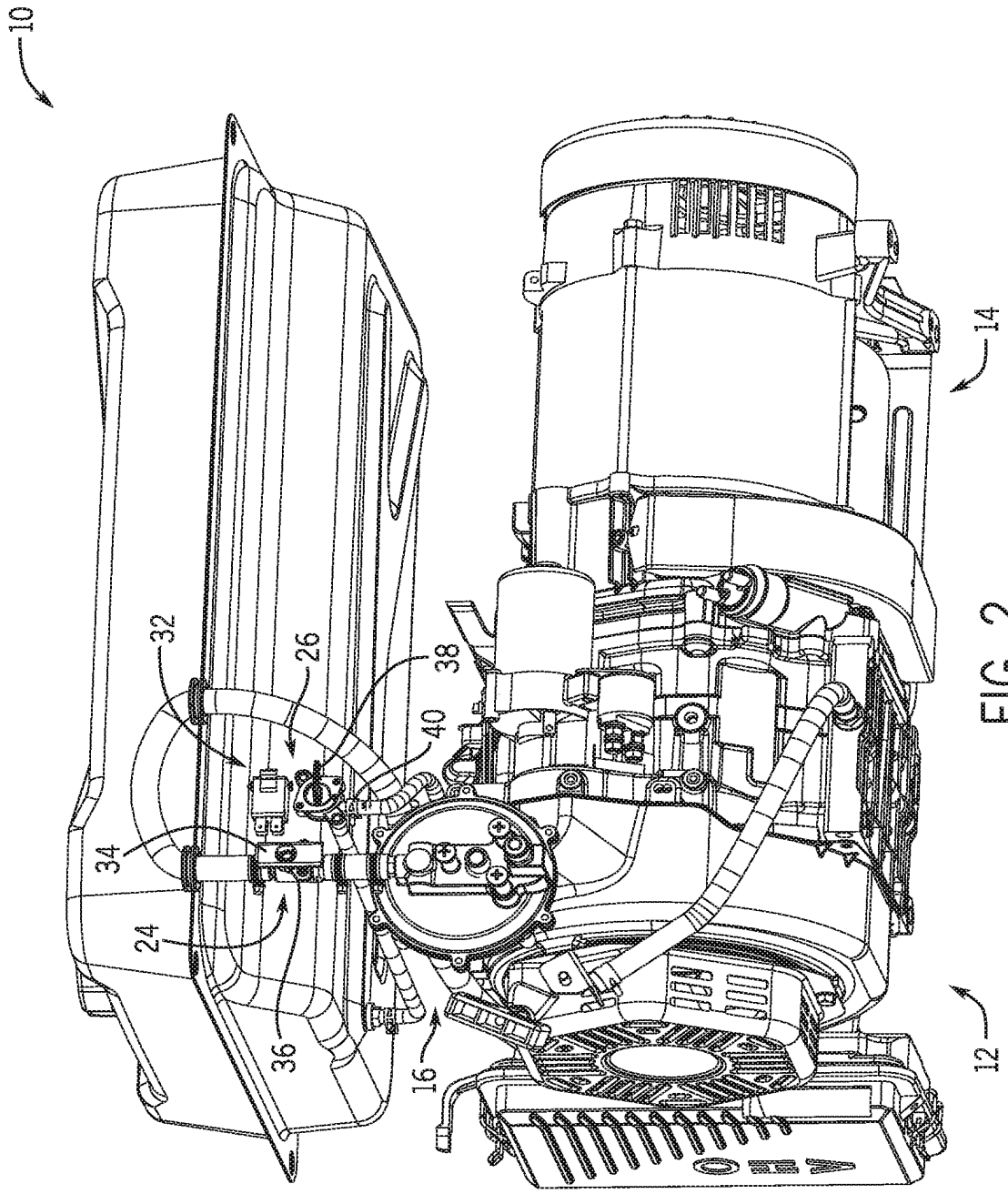

FIG. 2

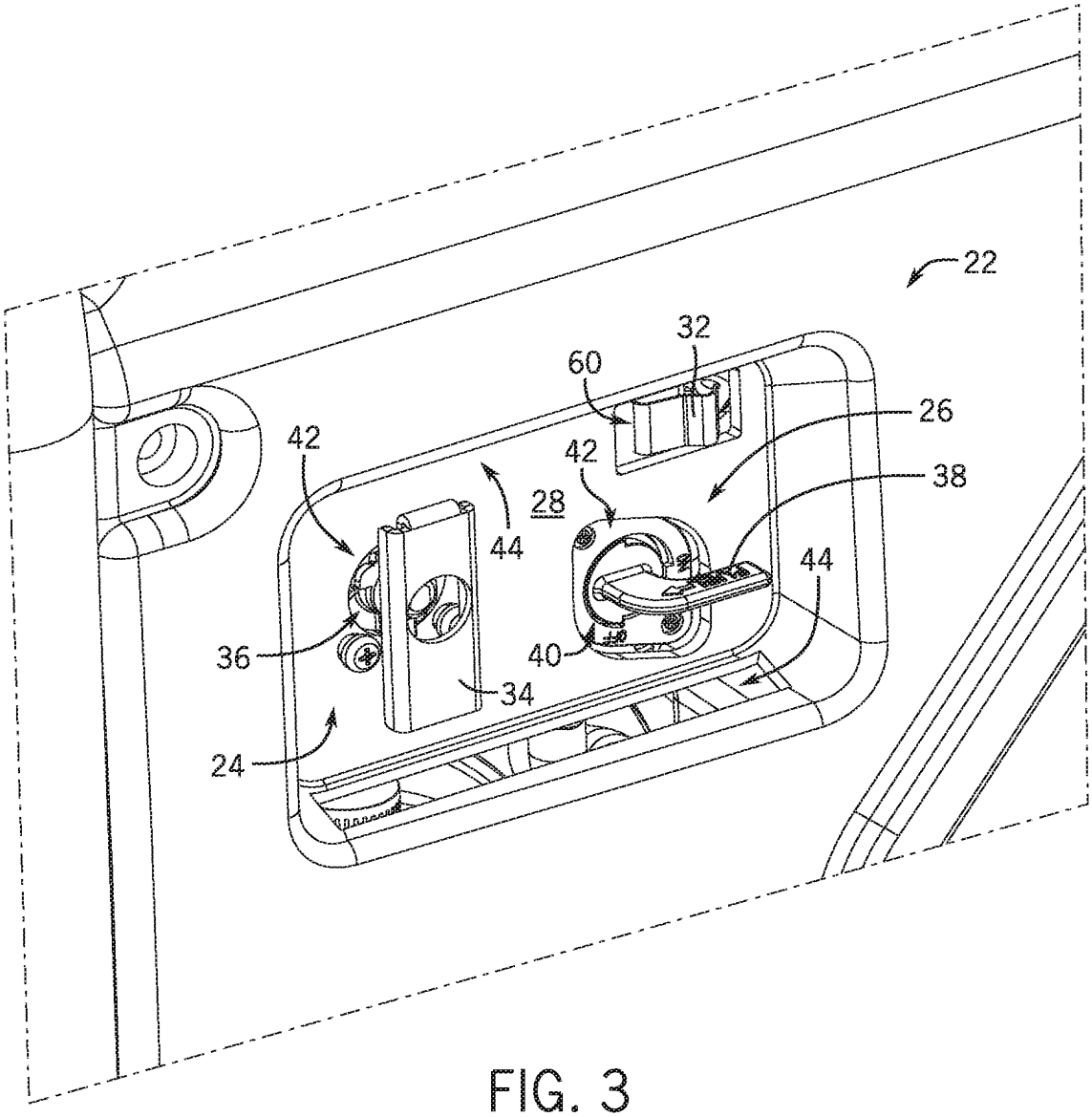

FIG. 3

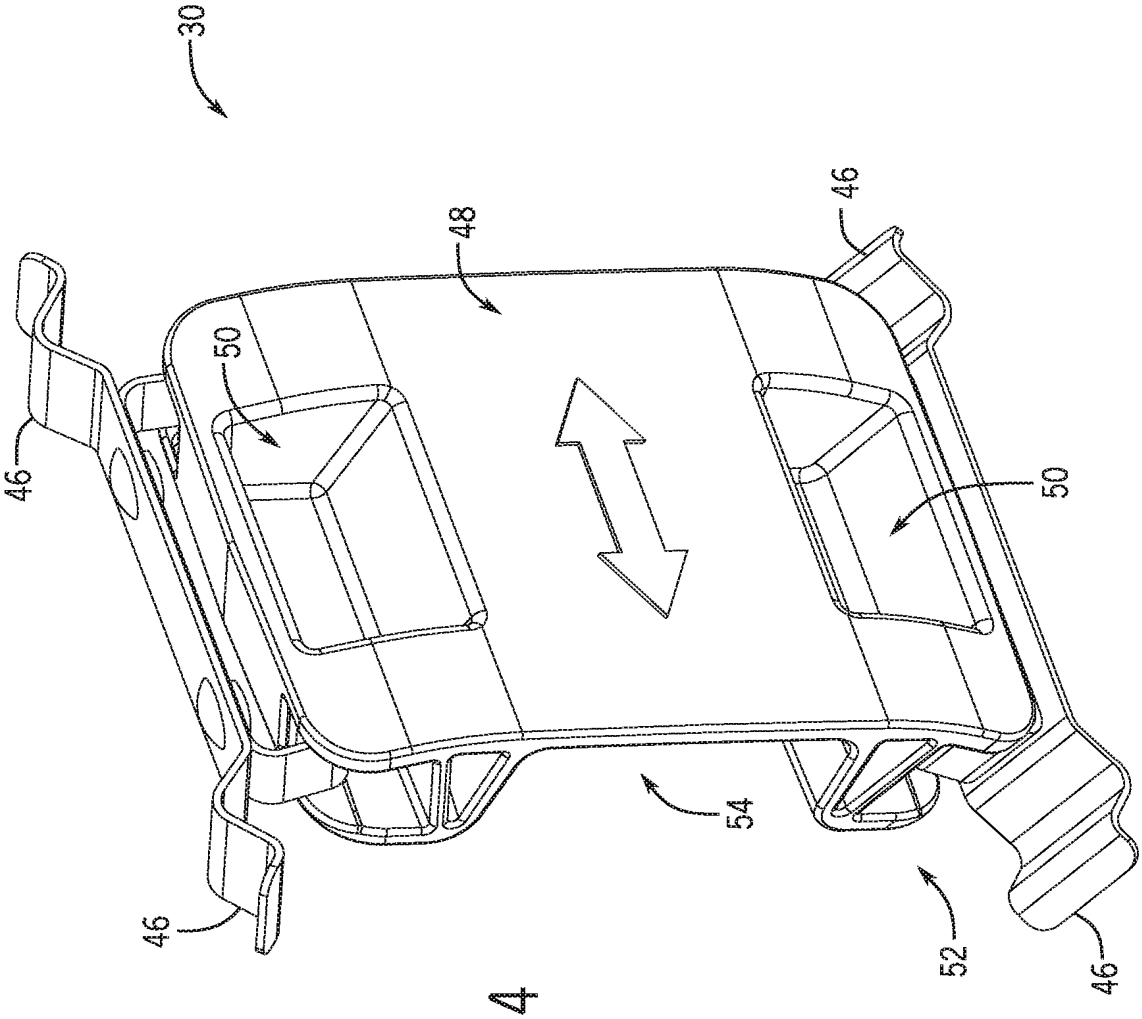

FIG. 4

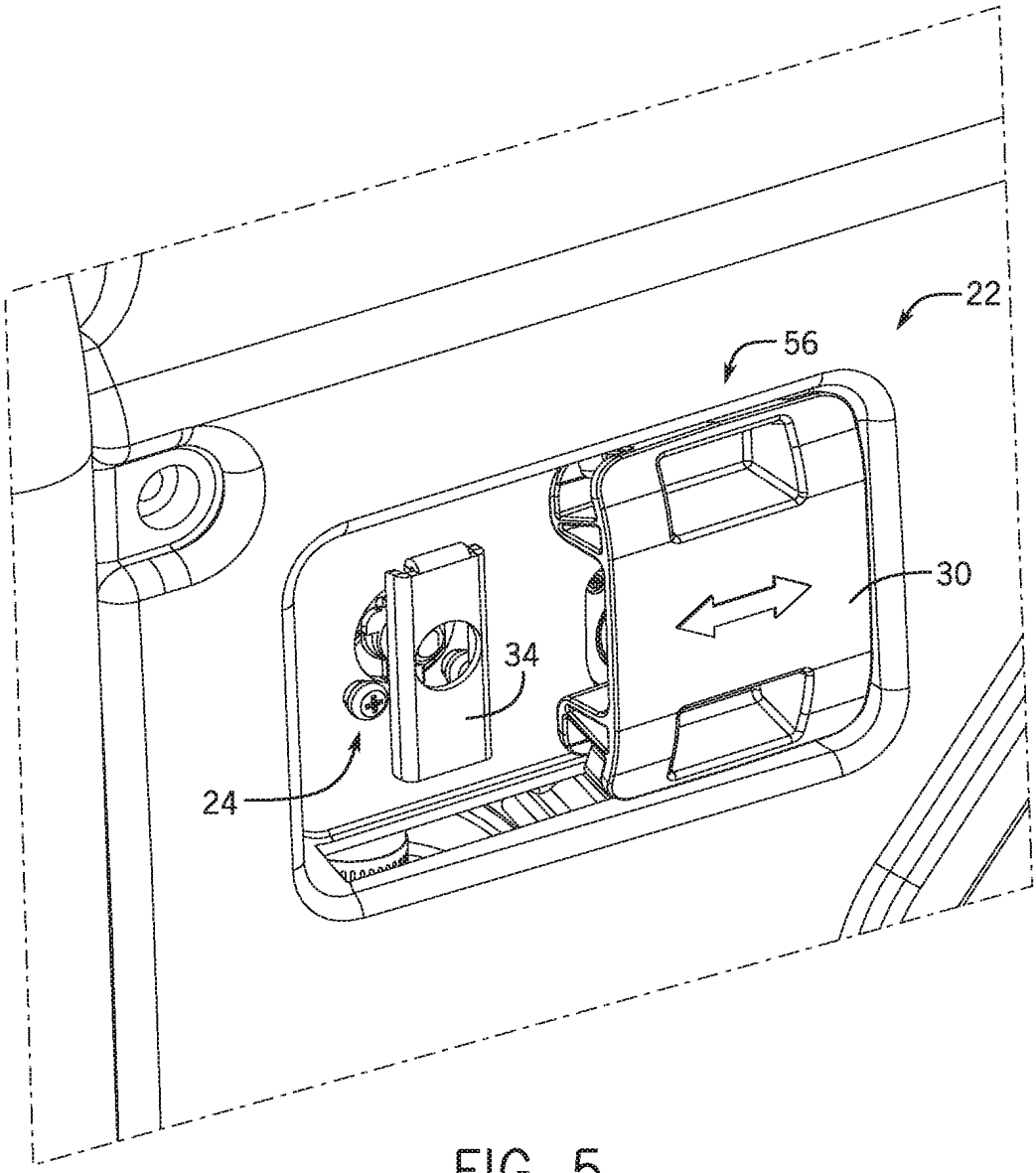

FIG. 5

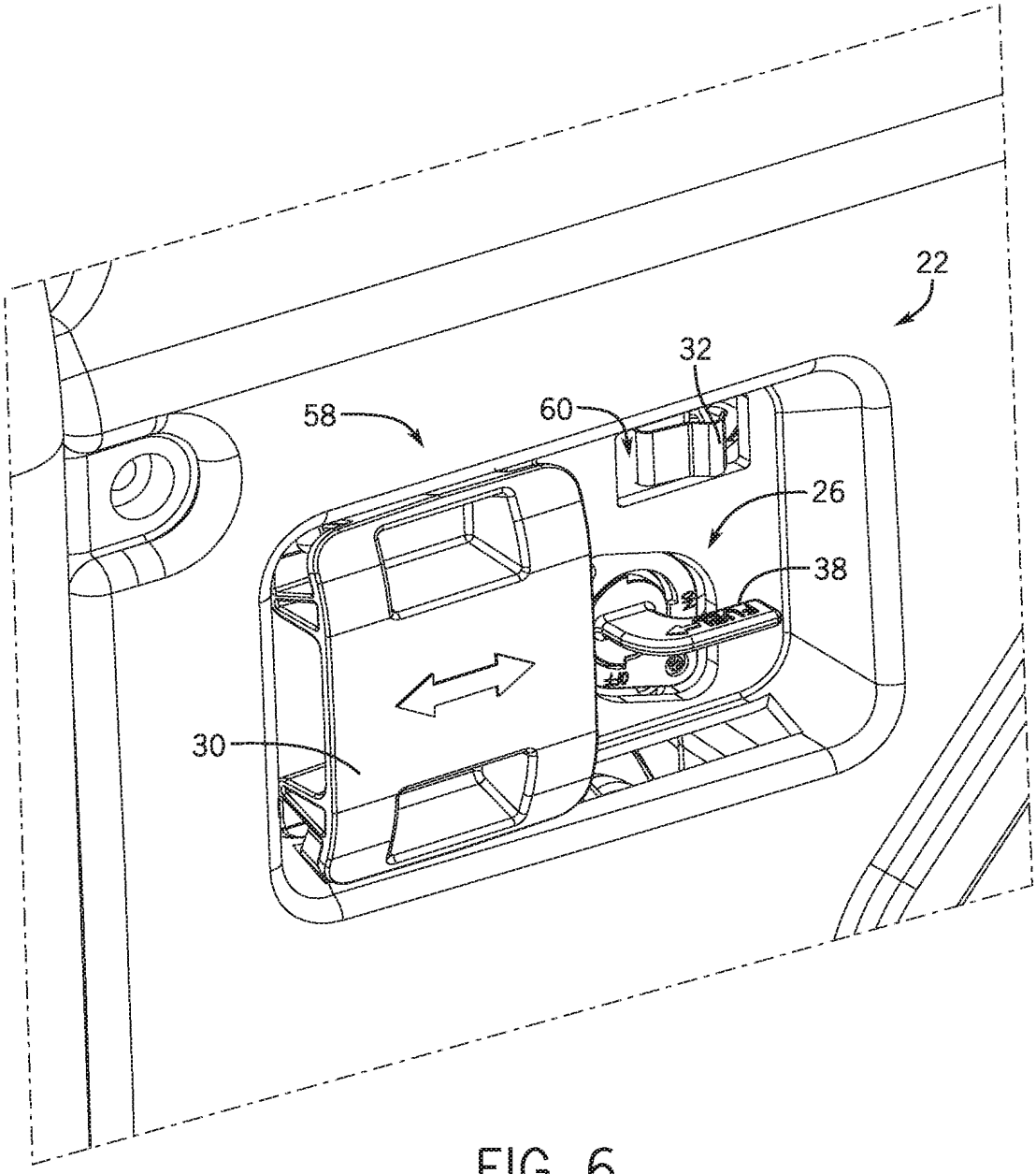

FIG. 6