(12) INTERNATIONAL APPLICATION PUBLISHED UNDER THE PATENT COOPERATION TREATY (PCT)

(19) World Intellectual Property Organization
International Bureau

(43) International Publication Date
15 February 2001 (15.02.2001)

PCT

(10) International Publication Number
WO 01/11891 A1

(51) International Patent Classification[7]: H04N 7/26

(21) International Application Number: PCT/US00/21823

(22) International Filing Date: 10 August 2000 (10.08.2000)

(25) Filing Language: English

(26) Publication Language: English

(30) Priority Data:
09/371,641 11 August 1999 (11.08.1999) US

(71) Applicant: NOKIA MOBILE PHONES LIMITED [FI/FI]; Keilalahdentie 4, FIN-02150 Espoo (FI).

(71) Applicant *(for LC only)*: NOKIA INC. [US/US]; 6000 Connection Drive, Irving, TX 75039 (US).

(72) Inventors: KARCZEWICZ, Marta; 1224 Hidden Ridge, Irving, TX 75039 (US). LAINEMA, Jani; 6219 Love Drive, Apt. 2226, Irving, TX 75039 (US). DOBRIN, Bogdan-Paul; Kierikankuja 6A, FIN-33710 Tampere (FI).

(74) Agents: KELLY, Robert, H. et al.; Holland & Hart LLP, 555-17th Street, Suite 3200, P.O. Box 8749, Denver, CO 80201-8749 (US).

(81) Designated States *(national)*: AE, AG, AL, AM, AT, AU, AZ, BA, BB, BG, BR, BY, BZ, CA, CH, CN, CR, CU, CZ, DE, DK, DM, DZ, EE, ES, FI, GB, GD, GE, GH, GM, HR, HU, ID, IL, IN, IS, JP, KE, KG, KP, KR, KZ, LC, LK, LR, LS, LT, LU, LV, MA, MD, MG, MK, MN, MW, MX, MZ, NO, NZ, PL, PT, RO, RU, SD, SE, SG, SI, SK, SL, TJ, TM, TR, TT, TZ, UA, UG, UZ, VN, YU, ZA, ZW.

(84) Designated States *(regional)*: ARIPO patent (GH, GM, KE, LS, MW, MZ, SD, SL, SZ, TZ, UG, ZW), Eurasian patent (AM, AZ, BY, KG, KZ, MD, RU, TJ, TM), European patent (AT, BE, CH, CY, DE, DK, ES, FI, FR, GB, GR, IE, IT, LU, MC, NL, PT, SE), OAPI patent (BF, BJ, CF, CG, CI, CM, GA, GN, GW, ML, MR, NE, SN, TD, TG).

Published:
— *With international search report.*

For two-letter codes and other abbreviations, refer to the "Guidance Notes on Codes and Abbreviations" appearing at the beginning of each regular issue of the PCT Gazette.

(54) Title: APPARATUS AND METHOD FOR COMPRESSING A MOTION VECTOR FIELD

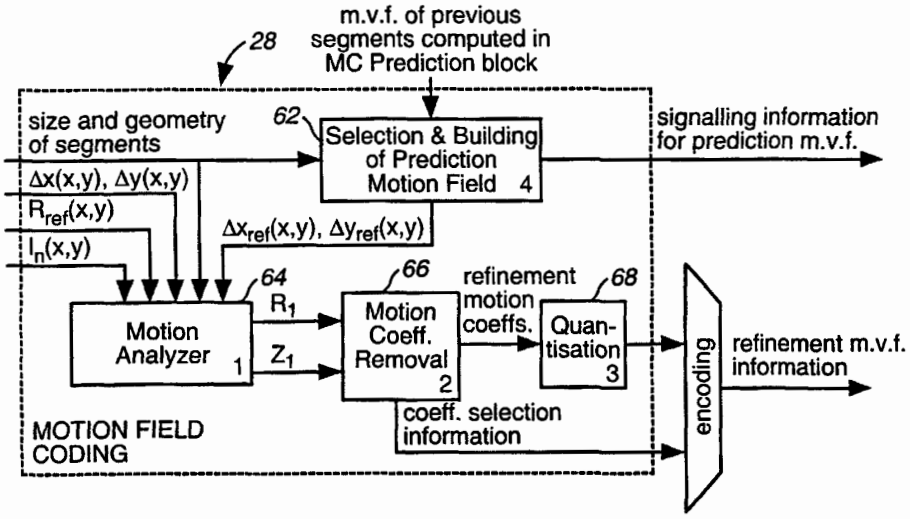

(57) Abstract: Apparatus, and an associated method, motion compensates coding of video sequences. Motion compensated prediction is utilized in the representation of motion vector fields. Reduced numbers of bits are required to represent the motion vector field while maintaining a low prediction error, thereby facilitating improved communication of, and recreation of, video frames forming a video sequence.

WO 01/11891 A1

APPARATUS AND METHOD FOR COMPRESSING A MOTION VECTOR FIELD

The present invention relates generally to a manner by which to utilize motion compensation in coding a video sequence. More particularly, the present invention relates to apparatus, and an associated method, for encoding, and decoding, a video sequence utilizing motion compensated prediction. Motion fields of a segment are predicted from adjacent segments of a video frame and by using orthogonal affine motion vector field models. Through operation of an embodiment of the present invention, motion vector fields are formed with a reduced number of bits while still maintaining a low prediction error.

BACKGROUND OF THE INVENTION

Advancements in digital communication techniques have permitted the development of new and improved types of communications. Additional advancements shall permit continued improvements in communications and communication systems which make use of such advancements.

For instance, communication systems have been proposed for the communication of digital video data capable of forming video frames. Video images utilized during video conferencing are exemplary of applications which can advantageously make use of digital video sequences.

A video frame is, however, typically formed of a large number of pixels, each of which is representable by a set of digital bits. And, a large number of video frames are typically required to represent any video sequence. Because of the large number of pixels per frame and the large number of frames required to form a typical video sequence, the amount of data required to represent the video sequence quickly becomes large. For instance, an exemplary video frame includes an array of 640 by 480 pixels,

each pixel having an RGB (red, green, blue) color representation of eight bits per color component, totaling 7,372,800 bits per frame.

Video sequences, like ordinary motion pictures recorded on film, comprise a sequence of still images, the illusion of motion being created by displaying consecutive images at a relatively fast rate, say 15 - 30 frames per second. Because of the relatively fast frame rate, the images in consecutive frames tend to be quite similar. A typical scene comprises some stationary elements, for example the background scenery and some moving parts which may take many different forms, for example the face of a newsreader, moving traffic and so on. Alternatively, the camera recording the scene may itself be moving, in which case all elements of the image have the same kind of motion. In many cases, this means that the overall change between one video frame and the next is rather small. Of course, this depends on the nature of the movement: the faster the movement, the greater the change from one frame to the next.

Problems arise in transmitting video sequences, principally concerning the amount of information that must be sent from the transmitting device to the receiver. Each frame of the sequence comprises an array of pixels, in the form of a rectangular matrix. To obtain a sharp image, a high resolution is required i.e. the frame should comprise a large number of pixels. Today, there are a number of standardized image formats, including the CIF (common intermediate format) which is 352 x 288 pixels and QCIF (quarter common Intermediate format) which is 176 x 144 pixels. QCIF format is typical of that which will be used in the first generation of mobile video telephony equipment and provides an acceptably sharp image on the kind of small (3 - 4cm square) LCD displays that may be used in such devices. Of course, larger display devices generally require images with higher spatial resolution, in order for those images to appear with sufficient spatial detail when displayed.

For every pixel of the image, color information must be provided. Typically, and as noted above, color information is coded in terms of the

primary color components red, green and blue (RGB) or using a related luminance/chrominance model, known as the YUV model which, as described below, provides some coding benefits. Although there are several ways in which color information can be provided, the same problem is common to all color representations; namely the amount of information required to correctly represent the color range present in natural scenes. In order to create color images of an acceptable quality for the human visual system, each color component must typically be represented with 8 bit resolution. Thus each pixel of an image requires 24 bits of information and so a QCIF resolution color image requires 176 x 144 x (3 x 8) = 608256 bits. Furthermore, if that QCIF image forms part of a video sequence with a frame rate of 15 frames per second, a total of 9,123,840 bits/s is required in order to code that sequence.

As such, amounts of data sometimes must be transmitted over relatively low bit-rate communication channels, such as wireless communication channels operating below 64 kilobits per second.

Video coding schemes are utilized to reduce the amount of data required to represent such video sequences. A key of many video coding schemes is a manner by which to provide motion compensated prediction. Motion compensated prediction, generally, provides a manner by which to improve frame compression by removing temporal redundancies between frames. Operation is predicated upon the fact that, within a short sequence of the same general image, most objects remain in the same location whereas others move only short distances. Such motion is described as a two-dimensional motion vector.

Some coding advantage can be obtained using the YUV color model. This exploits a property of the human visual system, which is more sensitive to intensity (luminance) variations than it is to color variations. Thus, if an image is represented in terms of a luminance component and two chrominance components (as in the YUV model), it is possible to spatially sub-sample (reduce the resolution of) the chrominance components. This results in a

reduction in the total amount of information needed to code the color information in an image with an acceptable reduction in image quality. The spatial subsampling may be performed in a number of ways, but typically each block of 16 x 16 pixels in the image is coded by 1 block of 16 x 16 pixels representing the luminance information and 1 block of 8 x 8 pixels for both chrominance components. In other words, the chrominance components are sub-sampled by a factor of 2 in the x and y directions. The resulting assembly of one 16 x 16 luminance block and two 8 x 8 chrominance blocks is commonly referred to as a macroblock. Using this kind of coding scheme, the amount of information needed to code a QCIF image can be calculated as follows: The QCIF resolution is 176 x 144. Thus the image comprises 11 x 9 16 x 16 pixel luminance blocks. Each luminance block has two 8 x 8 pixel sub-sampled chrominance blocks associated with it, i.e., there are also 11 x 9 macroblocks within the image. If the luminance and chrominance components are coded with 8 bit resolution, the total number of bits required per macroblock is 1 x (16 x 16 x 8) + 2 x (8 x 8 x 8) = 3072bits. Thus the number of bits required to code the entire QCIF image is now 99 x 3072 = 304128bits i.e. half the number required if no chrominance sub-sampling is performed (see above). However, this is still a very large amount of information and if a QCIF image coded in this way is part of a 15 frame per second video sequence, a total of 4,561, 920 bits/s are still required.

Video coding requires processing of a large amount of information. This necessarily means that powerful signal processing devices are required to code video images and, if those images are to be transmitted in their original form, a high bandwidth communication channel is required. However, in many situations it is not possible to provide a high capacity transmission channel. This is particularly true in video telephony applications, where the video signals must be transmitted over existing fixed line communication channels (i.e. over the conventional public telephone network) or using radio communication links, such as those provided by mobile telephone networks.

A number of international telecommunications standards already exist, laying down the guidelines for video coding in these kinds of systems. The H.261 and H.263 of the International Telecommunications Union (ITU) standards are exemplary. Standard H.261 presents recommendations for video coding in transmission systems operating at a multiple of 64kilobits/s (these are typically fixed line telephone networks), while H.263 provides similar recommendations for systems in which the available bandwidth is less than 64kilobits per second. The two standards are actually very closely related and both make use of a technique known as motion predictive coding in order to reduce the amount of information that must be transferred.

In mobile videotelephony the aim is to transmit a video sequence over a transmission channel with an available bandwidth of approximately 20k bits per second. The typical frame rate should be sufficient to provide a good illusion of motion and thus should be between 10 and 15 frames per second. Thus it will be appreciated that a very large compression ratio (approximately 225: 1) is required in order to match a video sequence requiring some 4.5Megabits per second to a channel capable of transferring only 20 kilobits per second. This is where motion predictive coding, as well as other techniques, comes into play.

The basic idea behind motion predictive coding is to take into account the very large amount of temporal redundancy that exists in video sequences. As explained above, in a typical video sequence recorded at comparatively rapid frame rate (i.e. greater than 1 0 frames per second), there are only small changes from one frame to the next. Usually the background is stationary and only some parts of the image undergo some form of movement. Alternatively, if the camera itself is moving, all elements undergo some consistent movement.

Thus it is possible to take advantage of this high degree of correlation between consecutive frames when trying to reduce the amount of information when transmitting a video sequence. In other words, one frame can be

predicted from a previous, so-called reference frame, which is usually, but not necessarily, the frame immediately preceding that currently being coded. In such a coding scheme, it is typically only the differences between the current frame and the reference frame, which are coded and transmitted to the receiver. In general, this kind of coding is referred to as INTER coding. It is a necessary requirement of such a coding scheme that both the transmitter and receiver keep a record of the reference frame (e.g. previous coded frame). At the transmitter the video encoder compares the current frame with the reference, identifies the differences between the two frames, codes them and transfers information about the changes to the receiver. In the receiver the current frame is then reconstructed in a video decoder by adding the difference information to the reference (e.g. previous) frame. The frame stores in the encoder and decoder are then updated so that the current frame becomes the new reference and the process continues in an identical fashion from one frame to the next.

There are of course, some situations in which this kind of prediction cannot be used. It is obvious that the first frame of a video sequence must always be coded and transmitted as such to the decoder in the receiver. Clearly there is no previous frame that can be used as a reference for predictive coding. A similar situation occurs in the case of a scene cut. Here the current frame may be so different from the previous one that no prediction is possible and again the new frame must be coded and transmitted as such. This kind of coding is generally referred to as INTRA coding. Many coding schemes also use periodic INTRA frame coding. For example one INTRA frame may be sent every ten or twenty frames. This is done to counteract the effect of coding errors that gradually accumulate and eventually cause unacceptable distortion in the reconstructed image.

Motion predictive coding can be viewed as an extension of the INTER coding technique introduced above. The account given above describes how difference information is sent to the receiver to enable decoding of a current

video frame with reference to some previous frame. The simplest and most obvious way to provide the difference information would be to send the pixel values (YUV data) of each pixel in the current image that differs from the corresponding pixel in the reference image. However, in practice this solution does not provide the reduction in data rate necessary to enable video transmission over very low bit rate channels. Motion predictive coding adopts a different approach. As previously described, both encoder and decoder maintain a record of a reference frame and the current frame is coded with reference to that stored frame. At the decoder, the current image is reconstructed with reference to the stored previous frame and the difference information transmitted from the encoder.

In the encoder, the current frame is examined on a segment-by-segment basis in order to determine the correspondence between itself and the reference frame. A number of segmentation schemes may be adopted. Frequently, the current image is simply divided into regular blocks of pixels e.g. the comparison may be done macroblock by macroblock. Alternatively, the frame may be divided on some other basis; perhaps in an attempt to better identity the different elements of the image contained therein and thus enable a more accurate determination of the motion within the frame.

Using the predefined segmentation scheme, a comparison is made between each segment of the current frame and the reference frame in order to determine the "best match" between the pixels in that segment and some group of pixels In the reference frame. Note that there is no fixed segmentation applied to the reference frame; the pixels that correspond best to a given segment of the current frame may, within certain limitations explained below, have any location within the reference. In this way motion predictive coding can be viewed as an attempt to identity the origin of a group of pixels in the current image i.e. it tries to establish how pixels values propagate from one frame to the next by looking back into the reference frame.

Once a best match has been found for a given segment within the current frame, the correspondence between the segment and the reference frame is coded using "motion vectors". A motion vector can be considered as a displacement vector with x and y (horizontal and vertical) components, which actually points back from the segment of the current frame to pixel locations in the reference frame. Thus motion vectors actually identify the origin of pixels in the current frame by comparison with the reference frame. Coding continues until the origin of each segment in the current frame has been identified. The resulting representation can be thought of as a "motion vector field" describing the overall correspondence between the two frames.

Coding of a complete video frame, segment-by-segment, using motion vectors produces a very efficient representation of the current frame, as comparatively very few bits are required to code information about the motion vectors for each segment. However, the coding process is not perfect and there are errors and loss of information. Typically, errors arise because it is not possible to identify exactly corresponding pixel values in the reference frame. For example, there may be some change in image content from one frame to the next, so new elements appear in the current frame which have no counterparts in the reference frame. Furthermore, many predictive motion encoders restrict the type of motion allowed between frames. This restriction arises as follows: In order to further reduce the amount of information required to represent the motion vector field, motion predictive encoders typically use a “motion model” to describe the way in which pixel values may be propagated from one frame to the next. Using a motion model, the motion vector field is described in terms of a set of “basis functions.” The propagation of pixel values from one frame to the next is represented in terms of these mathematical basis functions. Typically, the motion is represented as a sum involving the basis functions multiplied by certain coefficient values, the coefficients being determined in such a way as to provide the best approximation of the motion vector field. This re-expression of the motion

vector field necessarily introduces some additional error, as the motion model is unable to describe the motion vector field exactly. However, this approach has a significant advantage because now only the motion model coefficients must be transmitted to the decoder. This advantage arises because the motion field basis functions are chosen in advance, according to the implementation and the level of accuracy deemed necessary, and as such they are known to both the encoder and decoder. Many currently proposed video coding schemes that make use of motion predictive coding, and in particular the H.263 standard, are based on a translational motion field model i.e. one whose basis functions can only represent straight line movement in the x and y (horizontal and vertical) directions. Thus rotations and skewing of picture elements that may occur between consecutive frames cannot be represented and this inevitably introduces errors into the predicted motion.

Finally, and in order to compensate for the errors introduced by the motion field coding process, typical motion predictive encoders include an error estimation function. Information about the prediction error is transmitted to the decoder, together with the motion field model coefficients. In order to estimate the error introduced in the motion field coding process, a motion predictive encoder typically also includes a decoding section, identical to that found in the receiver. Once the current frame has been encoded using the motion predictive methods described above, the decoding section of the encoder reconstructs the current frame and compares it with the original version of the current frame. It is then possible to construct an "prediction error frame," containing the difference between the coded current frame and the original current frame. This information, together with the motion field model coefficients and perhaps some information about the segmentation of the current frame, is transmitted to the decoder.

Even with the use of such an exemplary, significant amounts of data are still required to represent a video sequence.

An improved manner by which to code video sequences utilizing reduced amount of bits or reduced bit rates, while maintaining low prediction error would therefore be advantageous.

It is in light of this background information related to video data that the significant improvements of the present invention have evolved.

SUMMARY OF THE INVENTION

The present invention, accordingly, advantageously provides apparatus, and an associated method, for operating upon a video sequence utilizing motion compensated prediction.

A manner is provided by which to represent a motion vector field by dividing a video frame into segments and predicting a motion field of a segment from its adjacent segments and by using orthogonal affine motion vector field models. Operation of an embodiment of the present invention provides a manner by which to quickly, and compactly, encode motion vector fields while also retaining a low prediction error. Communication of improved-quality video frames together forming a video sequence is thereby provided.

Through operation of an embodiment of the present invention, a manner is provided by which to reduce the amount of information needed to represent the motion vector field while preserving, at the same time, a low amount of prediction error.

A motion field coder for an encoder is provided by which to form the motion vector field. Use is made of affine motion vector field modeling. In contrast, for instance, to a purely translational motion model, a more flexible representation of the motion field can be obtained using the affine modeling. Typical natural motion, such as zooming, rotation, sheer, or translation is able to be represented by affine motion vector field models. Conventional systems which utilize only a translational model are unable to represent other forms of motion.

The similarity of affine motion vector fields of neighboring segments of a video frame is exploited by utilizing affine prediction motion vector fields. If, for instance, two neighboring segments have similar motion vector fields, one of the motion vector fields can be computed from the other merely with the addition of a small, or even negligible, i.e., zero, refinement field. For each segment of a video frame, an affine motion model is selected which achieves satisfactorily low prediction error with as few non-zero coefficients as possible. Furthermore, orthogonal basis functions are utilized. The orthogonal basis functions have low sensitivity to quantization of corresponding motion coefficients so that the coefficients are able to be represented with a small number of bits. That is to say, efficient transmission of the motion coefficients requires the coefficients to be quantized to low precision levels. However, types of basis functions conventionally utilized results in unacceptable increases in prediction error when represented by a small number of bits. As the coefficients corresponding to orthogonal basis functions are much more robust to quantization, advantageous utilization of the orthogonal basis function is made during operation of an embodiment of the present invention.

In one aspect of the present invention, a motion field coder is provided for a video encoder. The motion field coder is operable to form a compressed motion vector field which is formed of a set of motion vectors of all pixels of a current frame. The motion vector field is formed of a prediction motion vector field and a refinement motion vector field.

In another aspect of the present invention, a motion compensated predictor is provided for a video encoder. The motion compensated predictor receives indications of the compressed motion vector field formed by the motion field coder. The motion compensated predictor constructs a prediction frame. The predictor is operable to reconstruct the pixels of a frame by calculating the motion vector fields of each segment thereof. The motion

vector field is computed based on a prediction motion vector field and refinement motion vector field.

In yet another aspect of the present invention, a motion compensated predictor is provided for a video decoder. The motion compensated predictor receives indications of a predicted motion vector field and refinement motion vector field coefficients.

In these and other aspects, therefore, apparatus for a video device for operation upon a video sequence is provided. The video sequence is formed at least of a current video frame having at least a first neighboring segment and a second neighboring segment. The apparatus forms approximations of a motion vector field of the second neighboring segment. The apparatus includes a motion vector field builder coupled to receive indications representative of a first affine motion model forming an approximation of a first motion vector field representative of the first neighboring segment. The motion vector field builder forms a second affine motion model responsive to the indications representative of the first affine motion model. The second affine motion model forms the approximation of the motion vector field of the second neighboring segment.

A more complete appreciation of the present invention and the scope thereof can be obtained from the accompanying drawings which are briefly summarized below, the following detailed description of the presently-preferred embodiments of the invention, and the appended claims.

BRIEF DESCRIPTION OF THE DRAWINGS

Figure 1 illustrates an encoder and decoder of a video communication system in which an embodiment of the present invention is operable.

Figure 2 illustrates a functional block diagram of a motion field coder which forms a portion of the communication system shown in Figure 1.

Figure 3 illustrates a functional block diagram of a motion compensated predictor which forms a portion of the encoder and also of the decoder of the communication system shown in Figure1.

Figure 4 illustrates a manner by which a video frame is divided into segments during operation of an embodiment of the present invention.

Figure 5 illustrates a table indicating exemplary values and meaning of selection bits utilized during operation of an embodiment of the present invention.

DETAILED DESCRIPTION

The new manner of motion predictive video coding of an embodiment of the present invention report further reduces the amount of data to be transferred from encoder to decoder in a low bit-rate video coding system, while maintaining good image quality. The manner includes a new way of further predicting the pixel values of segments in the current frame using already coded segments of that same frame.

In one exemplary implementation, when a new video sequence is to be coded and transmitted, the first frame in the sequence is transmitted in INTRA format, as known from prior art and described above. That frame is then stored in the encoder and in the decoder and forms a reference frame for the next (i.e. second) frame in the sequence.

When the encoder begins encoding the second frame, it starts the coding process by examining the first segment of the frame. In the preferred embodiment, the current frame is divided into a set of 16 x 16 pixel segments, but this is not essential to the method and other segmentation schemes may be envisaged. Encoding is started from the upper leftmost segment and proceeds from left-to-right and top-to-bottom throughout the frame (i.e. the coding process is performed in rows, progressing from top to bottom).

A motion vector field that describes the mapping of pixel values between the reference frame and the first segment of the current frame is

determined and then a so-called "affine" motion model is used to approximate that motion vector and to generate a set of motion coefficients. The affine motion model is a special class of motion model whose mathematical form is such as to allow translational, rotational and skewing movements between frames. It comprises 6 basis functions. Thus the motion vectors are essentially replaced by a sum involving the six basis functions multiplied by appropriately chosen "motion coefficients." It is then sufficient to transmit only the motion coefficients (or a subset thereof) to the decoder, as the basis functions themselves are known to (i.e. stored in) both encoder and decoder. The group of pixels in the reference frame that yields the best affine motion model for any given segment of the current frame may reside, at least in theory, in any region of the reference frame. It should be emphasized here that an aim of this method is not merely to minimize the prediction error, but to find the affine motion field model that yields the best match for a segment in a "rate-distortion" sense. This means that the best match is determined by taking into account both a measure of image distortion and a measure of the amount of data required to achieve that level of distortion.

Since the first (upper leftmost) segment of the frame has no previously coded neighbors, no further action can be taken and the encoder proceeds to the second segment of the current frame. Then the affine motion field model providing the best mapping between the reference frame and the second segment of the current frame is determined, using the same kind of rate-distortion, best-match evaluation as previously described. As before, the corresponding region of pixel values may reside anywhere in the reference frame and may indeed overlap with that previously determined as the best match for the first segment of the current frame.

The second segment has one previously coded neighboring segment (i.e. the first segment). The encoder now considers whether it is "more efficient" to model the second segment in terms of the affine motion model previously determined for the first segment, rather than according to the newly

determined affine motion coefficients for the second segment itself. The rationale is as follows: Since the motion coefficients for the first segment have already been determined and transmitted to the decoder, it may be possible to reduce the amount of information that must be transmitted to the decoder while encoding the second segment. Hence an improvement in coding efficiency may be obtained.

However, it is unlikely that the motion coefficients for the first segment are exactly identical to those that most accurately model the motion vector field of the second segment. Therefore. the motion coefficients calculated for the first segment are not simply used as such, but a projection is performed in order to map the motion field of the first segment into the second segment. Even after this projection has been performed, it is still likely that some information about the difference between the motion fields of the first and second segments must also be sent to the decoder, in order to avoid unacceptable distortion in the reconstructed image. Thus, the encoder performs a comparison between the amount of data of required a) to transmit motion coefficient data determined specifically for the second segment and b) that required if the second segment's motion vector field is determined from a projection of the motion model of the first segment plus some "refinement" information. When making its choice of what information to transmit, the encoder must also take into account distortions that may introduced into the image by the prediction process. This comparison between options can be thought of as determining the "cost" of choosing a particular option, a trade-off between the amount of information to be transmitted and the amount of distortion allowed.

The benefit of this approach to motion predictive coding may not be immediately apparent. However, in many cases, it is found that after projection of the motion field model from a neighboring segment, very little or even zero refinement information is required. This can result in a significant reduction in the amount of data that must be transmitted from

encoder to decoder. In the case where zero refinement information is required, the motion vector field of the second segment can be predicted purely on the basis of motion coefficients already stored in the decoder.

So far in this example, only the first and second segments of the frame have been considered. As explained above, according to the segmentation scheme used in the preferred embodiment of the invention, the second segment has only one neighbor that can be used to predict its motion coefficients. The same is true for all other segments on the first row of the frame. All such segments can only have previously coded neighbors immediately to their left. However, on the second and subsequent rows of the image, previously coded segments are also available above each segment. Thus, segments in subsequent rows have neighbors to the left and above. This is true for all segments except the first in each row, which only has a previously coded neighbor directly above it. Thus, when considering a general segment in a frame to be coded, there are several possibilities for the prediction of motion coefficients. In a general case, the encoder can try to predict the motion coefficients for a given segment using the motion field model for the segment above it or to the left. Alternatively, it can form some kind of average, using the motion field model for both neighbors. In each case. the motion field model predicted from the neighboring segment(s) is referred to as the "prediction field" and the difference between the prediction field and the motion field model determined specifically for the segment itself is termed the "refinement field." In the preferred embodiment, both the prediction and refinement fields are affine motion field models. The sum of the prediction field and the refinement field should thus be equivalent to the motion field model determined by applying the affine motion model to the segment itself. In a situation where it is not possible to predict the motion field model for a given segment from any of its neighbors, the prediction field is set to zero and the refinement field becomes equal to the motion field model determined specifically for the segment itself.

As will be appreciated from the description above, there are several different ways in which a given segment can be coded. The choice of which option to use is made in the encoder on the basis of the "rate-distortion" considerations previously described. Consequently, several different types of data must be transmitted to the decoder, depending on the chosen coding option, and that information must be transmitted to the decoder in an unambiguous way, so that the segment can be correctly reconstructed and displayed. The various coding options are as follows. 1.) A given segment can be represented as a sum of a prediction field and a refinement field. 2.) The segment may be represented as a prediction field only. This situation may arise when the segment can be adequately represented in terms of the motion field of one or more of its previously coded neighbors and no refinement information is necessary, or in a case where the encoder has found it efficient to reduce the refinement field to zero. 3.) The segment in question may be coded using a motion model determined specifically for the segment using the reference frame. In this case, as described above, the prediction field is set to zero and the refinement field is set equal to the motion field model determined from the reference frame.

Basically, there are two types of information that must be transmitted to the decoder in order to enable correct reconstruction of a given segment. These are: 1.) selection information, enabling the decoder to select the correct neighboring segment(s) to use in prediction; 2.) motion coefficient information. Whenever a segment is coded using a prediction field, whether there is an associated refinement field or not, it is necessary to provide information about the neighboring segment(s) used in the prediction. It is not necessary to transmit any motion coefficient data because the motion field model(s) of the previously coded neighboring segment(s) are already known to (i.e., stored in) the decoder. Extra information may also be required if, for example, prediction is based on more than one neighboring segment, or neighboring segments have been divided into sub-segments and the motion

field model of one or more of the sub-segments is used to form the prediction field. When a refinement field is used, motion coefficient values must be provided. In this case, it should be remembered that it is only necessary to transmit motion coefficient data because the motion model basis functions are know to the decoder as well as the encoder.

The data stream transmitted from encoder to decoder is therefore likely to contain both motion coefficient data and a variety of selection data (i.e., non-motion coefficient data) instructing the decoder to perform different operations. For example, if the decoder receives non-motion coefficient data, it should construct a prediction motion field model using the neighboring segment(s) or sub-segment(s) indicated by the selection data. If it receives motion coefficient data, the decoder must construct a refinement motion field model using the transmitted motion coefficient values and the stored motion model basis functions. The format of the data stream provided by the encoder in the preferred embodiment of the invention is described in detail later in the text.

Some further refinements of the method are possible. In the preferred embodiment of the invention, neighboring segments can be divided into smaller sub-segments. Specifically, each 16 x 16 pixel segment may be divided into four 8x8 pixel blocks and the motion field models for those sub-segments can be used to derive prediction fields. In this case, a general 16x16 pixel segment has four immediately neighboring 8x8 pixel sub-segments that may be considered, two directly above and two immediately to the left. In this situation, the decision process is a little more complicated, but works in an essentially identical fashion to that described in the preceding paragraphs. The choice of sub-segment size is not limited to the example just-presented and a variety of other sub-segment sizes can be envisaged. For example, 4x8 or 8x4 pixel blocks could be used as sub-segments.

As stated above, when the method according to the invention is applied in practice, it is often found that very little refinement information is required

and the motion model of a general segment can be predicted with quite high precision from the motion field models of its neighbors. The invention includes a further feature, whereby individual coefficients of the refinement field or the entire refinement field may be set to zero, if that is efficient in a "rate-distortion sense." In other words, the refinement field may be set to zero if the image distortion introduced in doing that is acceptable when considering the reduction in the amount of data to be transmitted. This additional feature further reduces the amount of data that must be transmitted from encoder to decoder.

Referring first to Figure 1, a communication system, shown generally at 10, is operable to communicate a video sequence between a video sequence generator and a video sequence receiver. In the illustration of the Figure, the encoder 12 of the video sequence generator is shown, and a decoder 14 which forms a portion of the video sequence receiver is also shown. Other elements of the video sequence generator and receiver, respectively, for purposes of simplicity, are not shown. A communication path 16 is shown to interconnect the portions of the communication system. The communication path can take any of various forms, including, e.g., a radio-link.

The encoder 12 is here shown to be coupled to receive a video input on the line 18. The video input is provided to a motion estimator 22 and to an input of a subtractor 24. The motion estimator is also coupled to receive indications of a reference frame stored at a frame memory 26. The motion estimator calculates motion vectors of pixels between a frame being coded, i.e., the current video input $I_n(x, y)$, and a prior, i.e., reference frame, $R_{ref}(x, y)$.

Once the encoder has coded each segment, the information necessary for its reconstruction can be transmitted to the decoder and the decoder can start reconstructing the segment. Because each frame is coded on a segment-by-segment basis and only previously coded segments are used in the prediction process, reconstruction of the frame at the decoder can start at once

i.e. there is no need to wait until the entire frame has been encoded. Information about each segment is transmitted to the decoder as soon as it becomes available and decoding of the frame occurs at the receiver essentially in parallel with the encoding process. In videotelephony applications this has the advantage that end-to-end delay is kept to a minimum. Of course, the method can also be applied in video storage and retrieval systems where immediate transmission is not a necessary requirement. In that case, there is no requirement for data to be transmitted immediately and it might also be possible to use other neighboring segments in the current frame for prediction purposes.

The motion estimator 22 is coupled to a motion field coder 28. The motion field coder 28 is operable to form a motion vector field which is a set of motion vectors of all pixels of the current frame. The field generated by the motion field coder is provided by way of the line 32 to a multiplexor 34 thereafter to be communicated upon the communication path 16 to the video sequence receiver and the decoder 14 thereof.

The encoder is further shown to include a motion compensated (MC) predictor 36. The predictor 36 is also coupled to the frame memory 26. The predictor 36 is operable to generate a prediction frame which is supplied to the subtractor 24 and also to a summer 38.

Difference values formed by the subtractor 24 are provided to a prediction error coder 42. The prediction error coder determines the differences in pixel value between the current input video frame and the MC predicted version of the frame in order to produce an indication of the prediction error. And, in turn, the prediction error coder 42 is coupled to the multiplexor 34 and to a prediction error decoder 46. The prediction error decoding block decodes the prediction error which is added to the MC predicted current frame by the adder 38 and the result is stored in the frame memory 26.

The decoder 14 is here shown to include a demultiplexor 52, a prediction error decoder 54, a motion compensated predictor 36, a summer 56, and a frame memory 26. The predictor 36 of the encoder and of the decoder are commonly numbered as are the frame memories 26 of the respective devices.

The motion estimator 22 calculates motion vectors $(\Delta x(x, y), \Delta y(x, y))$ of pixels between the frame being coded, referred to as the current frame $I_n(x, y)$, and the reference frame $R_{ref}(x, y)$. The reference frame is one of the previously coded and transmitted frames which at a given instant is available in the frame memory 26 of the encoder and also of the decoder.

$\Delta x(x, y)$ and $\Delta y(x, y)$ are the values of the horizontal and vertical displacements, respectively. The set of motion vectors of all pixels in the current frame, referred to as a motion vector field, is compressed by the motion field coder 28 and thereafter, as noted above, sent to the decoder.

To indicate that the compression of the motion vector field is typically lossy, the compressed motion vectors are denoted as $\left(\tilde{\Delta}x(x,y),\tilde{\Delta}y(x,y)\right)$. In the motion compensated predictor 36, the compressed motion vectors and the reference frame are used to construct a prediction frame, $P_n(x, y)$. The prediction frame is a coded version of the current frame $I_n(x, y)$ calculated using the motion vector field determined by the motion estimator 22 and the motion field coder 28 and the pixel values of the reference frame $R_{ref}(x, y)$. The following equation shows the manner in which the prediction frame is calculated:

EQUATION 1

$$P_n(x,y) = R_{ref}\left(x + \tilde{\Delta}x(x,y), y + \tilde{\Delta}(x,y)\right)$$

The prediction error, i.e., the difference between the current frame and the prediction frame, is as follows:

EQUATION 2

$$E_n(x,y) = I_n(x,y) - P_n(x,y)$$

The prediction error is compressed and sent to the decoder 14. The compressed prediction error is denoted as $\tilde{E}_n(x,y)$.

At the decoder 14, pixels of the current coded frame $\tilde{I}_n(x,y)$, are reconstructed by finding the prediction pixels in the reference frame $R_{ref}(x, y)$ using the received motion vectors and by adding the received prediction error $\tilde{E}_n(x,y)$ as follows:

EQUATION 3

$$\tilde{I}_n(x,y) = R_{ref}\left(x + \tilde{\Delta}x(x,y), y + \tilde{\Delta}(x,y)\right) + \tilde{E}_n(x,y)$$

The difference between the coded frame and the original frame is designated as follows:

EQUATION 4

$$D_n(x,y) = I_n(x,y) - \tilde{I}_n(x,y)$$

and is referred to as the reconstruction error.

The motion compensated prediction frame $P_n(x, y)$, formed by the MC predictor 36 is constructed in such a way as to minimize the amount of reconstruction error, and at the same time, minimize the amount of information needed to represent the motion vector field.

A frame of a typical video sequence contains a number of segments with different motion. Therefore, motion compensated prediction is performed by dividing the frame $I_n(x, y)$ into several segments and estimating the motion of such segments between such frame and a reference frame. Segmentation information is an inherent part of motion representation. Unless a default frame segmentation is used, and known both to the encoder and to the decoder, additional information describing the final partition of the frame must be transmitted to the decoder. In practice, a segment typically includes at least a few tens of pixels. In order to represent the motion vectors of such pixels compactly, it is desirable that their values be described by a function of a few parameters. Such a function is referred to as a motion vector field model. For the purposes of the following description, the motion vectors of an image segment shall be approximated using the following general, additive expression:

EQUATION 5

$$\Delta x(x,y) = \Delta x_{prd}(x,y) + \Delta x_{refine}(x,y) \qquad \Delta y(x,y) = \Delta y_{prd}(x,y) + \Delta y_{refine}(x,y)$$

The second terms of the above equation are referred to as refinement motion vector fields and are expressed as linear combinations as follows:

EQUATION 6

$$\Delta x_{refine}(x,y) = \sum_{n+1}^{N} c_n f_n(x,y) \qquad \Delta y_{refine}(x,y) = \sum_{n=N+1}^{N+M} c_n f_n(x,y)$$

The parameters c_n are referred to as refinement motion coefficients. The coefficients are compressed at the encoder transmitted upon the communication path 16, and then recovered at the decoder 14.

The functions f_n are referred to as basis functions and are known to both the encoder 12 and to the decoder 14. The set of vectors $\left(\Delta x_{prd}(x,y), \Delta y_{prd}(x,y)\right)$ is referred to as a prediction motion vector field and is also known to both the encoder and to the decoder.

The prediction error frame, $E_n(x, y)$ see equation 2, resulting after motion compensated prediction is typically encoded by using a two-dimensional transform such as a discrete cosine transform (DCT). This process is referred to as prediction error coding and aims to reduce the prediction error. Since the prediction error coding is usually lossy, this results in a reconstruction error.

A primary task of the encoder 12 is to find a suitable set of motion coefficients which are to be encoded and transmitted to the decoder. Usually, by increasing the number of bits allocated to the coding of coefficients, the resultant, incurred distortion is reduced. However, the decrease in distortion is not always worth the increased number of bits. Typically, a way to deal with such a tradeoff is to minimize the following Lagrangian criterion as follows:

EQUATION 7

$$L = D + \lambda \cdot B$$

In this equation, the term D represents the incurred distortion, i.e., error, when encoding by a given set of coefficients. The cost of sending the coefficients is represented by the number of bits B. The factor λ is a constant referred to as the Lagrangian parameter.

In operation of an embodiment of the present invention, the motion vector field of a given segment of a video frame is a sum of two affine motion vector fields, namely, the prediction motion vector field and the refinement motion vector field as follows:

EQUATION 8

$$\Delta x(x,y) = \Delta x_{prd}(x,y) + \Delta x_{refine}(x,y) \qquad \Delta y(x,y) = \Delta y_{prd}(x,y) + \Delta y_{refine}(x,y)$$

The prediction motion vector field is obtained from the motion vector field of one or more neighboring segments in one of several ways. For instance, in one implementation, the prediction motion vector field is obtained by extrapolating the affine motion vector field of a neighboring, e.g., adjacent, segment inside the area covered by the current segment. As the current segment can have several neighboring segments, usually signaling information is provided to the decoder in order to specify which segment shall be used. In another implementation, the prediction motion vector field is obtained from a combination of affine motion vector fields of several neighboring segments using some particular method which is known both to the encoder and to the decoder. Such method is, for example, averaging or determining the median, of horizontal and vertical motion vector field components.

The refinement motion vector field has an affine model expressed as follows:

EQUATION 9

$$\Delta x_{refine}(x,y) = \sum_{n=1}^{3} c_n f_n(x,y) \qquad \Delta y_{refine}(x,y) = \sum_{n=1}^{3} c_{n+3} f_n(x,y)$$

in which the basis functions $f_1 ..., f_3$ are affine orthogonal functions. The basis functions are orthogonal with respect to a rectangle circumscribing the given segment. And, the coefficients $c_1,....,c_6$, are refinement motion vector field coefficients corresponding to the orthogonal set of basis functions.

The refinement motion coefficients are determined for every segment in the frame by the motion field coder during encoding by the encoder 12, and, in particular, by the motion field coder 28.

Figure 2 illustrates the motion field coder 28 in greater detail. The coder 28 is here shown to include a selector and builder of prediction motion fields 62, a motion analyzer 64, a motion coefficient remover 66, and a quantizer 68.

The selector and builder 62 is operable, for a given segment, to determine a previously-encoded segment of the current frame, or a combination of such segments, whose motion vector field, or fields, is best suitable for predicting the motion field of a given, e.g., current segment. Based on the motion vector field of the "winning" candidate, or candidates, the prediction motion field is computed as described above. Usually, signaling information is transmitted to the decoder to specify the most suitable amongst the several candidate segments.

The motion analyzer 64 is operable to find a new representation of a refinement motion vector field. That is to say, a mathematically efficient representation is made. The new representation is later used at the motion coefficient remover 66 for a quick and flexible determination of refinement motion coefficients.

The motion coefficient remover 66 is operable to determine which of the refinement coefficients should be set to zero and to calculate the value of remaining non-zero coefficients so as to minimize the Lagrangian criterion as follows:

EQUATION 10

$$L(c) = D(c) + \lambda \cdot B(c)$$

in which *D(c)* and *B(c)* are measures of prediction error and bits corresponding to encoding the given segment by using the refinement motion coefficients *c*. The constant λ is a Lagrangian parameter. When setting some of the refinement motion vector field coefficients to zero, the prediction error is increased. However, when more coefficients are set to zero, the number of bits required to be transmitted by the encoder to the decoder is reduced. Therefore, the value of the Lagrangian can decrease when some of the refinement motion coefficients are set to zero.

The quantizer 68 is operable to quantize the remaining non-zero refinement motion vector coefficients in order to make such coefficients suitable for entropy coding and transmission from the encoder to the decoder.

Figure 3 illustrates the motion compensated (MC) predictor 36 forming portions of both the encoder and decoder 12 and 14 respectively, as shown in Figure 1. The functional elements of the MC predictor 36 are similar for both the encoder and the decoder and the MC predictor is operable, at both the encoder and decoder to reconstruct the pixels of a current frame by calculating the motion vector fields of each segment within the frame. The motion vector field is computed based upon a prediction motion vector field $\left(\Delta x_{prd}(x,y), \Delta y_{prd}(x,y)\right)$ and the refinement motion vector field coefficients. In the exemplary implementation, the refinement motion vector fields are represented by their inverse quantized values. At the decoder 14 the prediction motion vector field is derived from one or several neighboring segments which have already been decoded. The refinement motion vector field coefficients are available at the decoder after the decoding and inverse quantization performed by the inverse quantizer 76. As illustrated, the MC predictor further includes a motion vector field builder, a segment predictor 80 and a prediction motion vector field builder 81.

As Figure 2 illustrates, inputs to the motion analyzer 64 of the motion field coder 62 include the estimation motion vector field $(\Delta x(x, y), \Delta y(x, y))$. The motion vector field is provided by the Motion Estimator 22 (shown in Figure 1). The motion vector field is calculated in the motion estimator 22 in a conventional fashion. The prediction motion vector field is also provided to the motion analyzer. And, the geometry, that is, the size and shape, of the segment, S, which is to be coded and the reference and current frames ($R_{ref}(x\ y)$ and $I_n(x, y)$, respectively) are also provided as inputs to the motion analyzer.

The motion analyzer is operable to perform several operations. First, the motion analyzer performs error linearization. The prediction error D_i of a given segment S_i , which consists of P pixel coordinates (x_p,y_p), $p = 1,2 \ldots P$ and whose prediction motion field is denoted by $(\Delta x_{prd}(x_p,y_p), \Delta y_{prd}(x_p,y_p))$ and whose refinement motion vector field is approximated by an affine motion model as given by equation 9 is:

EQUATION 11

$$D_i = \sum_{p=1}^{P}\left(I_n\left(x_p, y_p\right) - R_{ref}\left(x_p + \Delta x_{prd}\left(x_p, y_p\right) + \Delta x_{refine}\left(x_p, y_p\right), y_p + \Delta y_{prd}\left(x_p, y_p\right) + \Delta y_{refine}\left(x_p, y_p\right)\right)\right)$$

During linearization, the value of $R_{ref}(x, y)$ of equation 11 is approximated using some known approximation method so that it becomes linearly dependent on $(\Delta x_{\text{refine}}(x_p, y_p), \Delta y_{\text{refine}}(x_p, y_p))$. Then, the square prediction error D_i can be approximated as follows:

EQUATION 12

$$D_i = \sum_{p=1}^{P}(e_{p,1}c_1 + e_{p,2}c_2 + \ldots + e_{p,6}c_6 - w_p)^2$$

The values of e and w are dependent upon the type of approximation method utilized.

Thereafter, matrices are constructed by the motion analyzer. As the elements under the square in equation (12) are linear combinations of coefficients c_n, minimization of the equation is fully equivalent to minimization of the following matrix expression:

EQUATION 13

$$(\mathbf{E}_i\mathbf{c}_i-\mathbf{w}_i)^T(\mathbf{E}_i\mathbf{c}_i-\mathbf{w}_i)$$

Where $\mathbf{E}_i$, $\mathbf{w}_i$, and $\mathbf{c}_i$ are as follows:

EQUATION 14

$$\mathbf{E}_i = \begin{bmatrix} e_{1,1} & e_{1,2} & \dots & e_{1,N+M} \\ e_{2,1} & e_{2,2} & \dots & e_{2,N+M} \\ \dots & \dots & \dots & \dots \\ e_P & e_{P,2} & \dots & e_{P,N+M} \end{bmatrix}, \mathbf{w}_i = \begin{bmatrix} w_{1,} \\ w_2 \\ \dots \\ w_p \end{bmatrix}, \mathbf{c}_i \begin{bmatrix} c_{1,} \\ c_2 \\ \dots \\ c_{N+M} \end{bmatrix}$$

Based on $\boldsymbol{E}_i$ and $\boldsymbol{w}_i$, a matrix $\boldsymbol{A}_i$ and a vector $\boldsymbol{d}_i$ are calculated as follows:

EQUATION 15

$$\mathbf{A}_i=\mathbf{E}_i^T\mathbf{E}_i.$$

EQUATION 16

$$\mathbf{d}_i=\mathbf{E}_i^T\mathbf{w}_i.$$

The motion analyzer generates an output which includes an $(N+M)$ x $(N+M)$ upper triangular matrix $\boldsymbol{R}_i$ which has the following form:

$$\mathbf{R}_i = \begin{bmatrix} x & x & x & \dots & x \\ 0 & x & x & \dots & x \\ 0 & 0 & x & \dots & x \\ \vdots & \vdots & \vdots & \ddots & \vdots \\ 0 & 0 & 0 & \cdots & x \end{bmatrix}$$

where the symbol x denotes a nonzero element which is obtained by calculating a Cholesky factorization of matrix A_i as follows:

EQUATION 17

$$\mathbf{A}_i = \mathbf{R}_i^T \mathbf{R}_i.$$

The motion analyzer also generates a vector z_i which is obtained by solving the following set of equations:

EQUATION 18

$$\mathbf{R}_i^T \mathbf{z}_i = \mathbf{d}_i.$$

The matrix $\boldsymbol{R}_i$ and the vector z_i are the output parameters of the motion analyzer and together such output parameters constitute a representation of a refinement motion vector field suitable for manipulation at the motion coefficient remover 66.

The output of the motion analyzer 64 forms the input to the motion coefficient remover 66. The operations performed by the remover 66 when setting some of the refinement motion field coefficients to zero include, for instance, removing those elements that correspond to coefficients that can be removed from $\boldsymbol{R}_i$ with $\tilde{z}^I$. The result is a modified matrix R and vector z.

Various manners can be utilized to specify, or imply by default, the segment or the set of neighboring segments from which the prediction motion field is derived. Also , different manners can be utilized to generate the

prediction motion field $\Delta x_{prd}(x, y)$, $\Delta y_{prd}(x, y)$, to linearize equation (11) above, and to solve the set of equations (18).

Figure 4 illustrates a single video frame 84, here shown to be divided into a plurality, here thirty, segments 86. Each of the segments 86 is here formed of a sixteen pixel by sixteen pixel block. And, each of the segments can further be divided to form smaller segments. Here some of the segments 86 are divided to form eight pixel by eight pixel blocks 88. The segments 86 are commonly referred to as macroblocks. The coding of a frame is performed by scanning from left-to-right and top-to-bottom, macroblock by macroblock.

As described previously, the motion vector field of a given segment obeys the additive motion model given in equation (8). The way in which the prediction, the refinement, and the final motion prediction fields are obtained is described below. In the exemplary implementation, either of the motion prediction or motion refinement fields can be zero. Therefore, with respect to motion vector fields, a given segment S_i can be coded in any of various manners. For instance, the segment can be coded using only prediction motion vector fields extrapolated from a neighboring segment. Or, the segment can be coded by using a prediction motion vector field extrapolated from a neighboring segment together with a compressed refinement motion vector field. Alternately, the segment can be coded using only a compressed motion vector field without utilization of a prediction field. If the prediction field is set to zero, however, refinement information is sent. The segment can also be coded by using a zero motion vector field, e.g., a copy from the reference frame $R_{ref}(x,y)$. And, for example, the segment can be coded using intra coding in which no motion vector field is utilized.

In the exemplary implementation, independent of the presence of a prediction motion vector field or a refinement motion vector field, the final motion vector field of a given motion compensated segment S_i has an affine model given by the following equation, here in which the superscript i

indicates the fact that the coefficients are associated with a corresponding segment S_i:

EQUATION 19

$$\Delta x(x,y)=\beta_1^i+\beta_2^i \cdot (y-y_o^i)+\beta_3^i \cdot (x-x_o^i)$$

$$\Delta x(x,y)=\beta_4^i+\beta_5^i \cdot (y-y_o^i)+\beta_6^i \cdot (x-x_o^i)$$

wherein x_o^i and y_o^i are coordinates of the upper left-most pixel in the segment and $\beta_1^i, \ldots \beta_b^i$ are the affine coefficients calculated as described below.

In the exemplary implementation of the decoder 14, operations are performed by utilizing integer precision. This is achieved by utilizing a fixed point implementation corresponding to a fixed precision. As a result, all of the coefficients referred to hereinbelow are integer-valued, including the coefficients of equation (19). In other implementations, other precisions are utilized.

In the exemplary implementation, one bit is sent to the decoder 14 to signal whether the prediction field of a neighbor is used or not, but only in the case when there is at least one prediction neighbor candidate. A neighboring segment S_k is a candidate for prediction of motion vector field of a segment S_i only if it has a nonzero motion vector field.

Also in the exemplary implementation, prediction is performed only from a nearest neighboring block at the left or just above the current segment. Therefore, the number of neighboring segments can be at most four, i.e., two eight by eight pixel blocks above and two eight by eight pixel blocks at the left. In this implementation, whenever the bit sent to the decoder indicates that prediction from a neighboring segment is used, the number and location of prediction candidates is calculated, in both the encoder and decoder. If there are, e.g., two, three, or four prediction candidates, then one or two selection bits are sent to the decoder 14 to indicate the candidate to be used.

The selection information is made, e.g., of one prediction direction bit which may, or may not, exist, followed by one discrimination bit, which also may, or may not, exist.

Figure 5 illustrates a table, shown generally at 92, which lists the meanings and values of selection bits in an exemplary implementation of the present invention. The mark x denotes absence or logical don't cares depending on context. The direction bit indicates whether candidate neighbor segments are available above or to the left of the segment currently being predicted. The discrimination bit specifies which of two remaining candidates must be used for prediction of motion vector fields. That is to say, when the segments above or to the left are chosen, two selection possibilities are available. The discrimination bit identifies the selection. In the final four cases shown in the table, the discrimination bit may, or may not, exist depending on the location of the most suitable candidate segment. For instance, if the direction bit indicates "from left" where there is only a single candidate, then the discrimination bit is not needed. In the decoder 14, the direction the winning candidate is known after decoding the direction bit.

Once the neighboring segment has been selected for the prediction of the current segment, the prediction motion vector field is simply the extrapolation of the motion vector field of the segment inside the pixel domain covered by the current segment as follows:

EQUATION 20

$$\Delta x_{prd}(x,y)=\beta_1^k + \beta_2^k \cdot (y-y_o^k) + \beta_3^k \cdot (x-x_o^k)$$

$$\Delta y_{prd}(x,y)=\beta_4^k + \beta_5^k \cdot (y-y_o^k) + \beta_6^k \cdot (x-x_o^k)$$

where x_o^k, y_o^k are coordinates of the upper left-most pixel in the neighboring segment S_k and $\beta_1^k, \ldots \beta_6^k$ are integer-valued coefficients corresponding to

the motion field of segment S_k. In equation 20, the superscript k indicates that the coefficients are associated with the neighboring segment S_k.

Analysis of equations 19 and 20 indicates that the motion vector field of the neighboring segment S_k has become the prediction motion vector field of the segment S_i by simply extrapolating it to the pixels inside the current segment S_i.

The refinement motion vector field assumes the affine orthogonal model given in equation 9. However, in the preferred implementation, the refinement coefficients are converted into a set of auxiliary refinement coefficients. The auxiliary refinement coefficients enable a fast computation of the final predicted motion field.

In the preferred implementation, refinement coefficients in equation 9 which correspond to an orthogonal affine set of basis functions are first converted to a different set of auxiliary coefficients . These coefficients correspond to the set of basis functions $\{1, (y-y_O), (x-x_O)\}$ where x_O, y_O are coordinates of the upper-left most pixel in the segment. This conversion is performed in order to achieve a common basis function representation for both prediction and refined motion vector fields, i.e., in order to use the same set of basis functions. By doing so, the final motion vector field is computed based on the summation of two sets of coefficients, as will be described later. Based upon the refinement coefficients, c_1, ..., c_6 the following auxiliary coefficients a_1 .....a_6 are calculated for segments S_i. For segments which are sixteen by sixteen pixel blocks; this is done as follows:

EQUATION 21

$$\begin{bmatrix} a_1 \\ a_2 \\ a_3 \end{bmatrix} = \begin{bmatrix} 4096 & 6664 & 6664 \\ 0 & -889 & 0 \\ 0 & 0 & -889 \end{bmatrix} \cdot \begin{bmatrix} c_1 \\ c_2 \\ c_3 \end{bmatrix} \; and \; \begin{bmatrix} a_4 \\ a_5 \\ a_6 \end{bmatrix} = \begin{bmatrix} 4096 & 6664 & 6664 \\ 0 & -889 & 0 \\ 0 & 0 & -889 \end{bmatrix} \cdot \begin{bmatrix} c_4 \\ c_5 \\ c_6 \end{bmatrix}.$$

For segments S_i which are eight by eight pixel blocks, the calculation takes the form:

EQUATION 22

$$\begin{bmatrix} a_1 \\ a_2 \\ a_3 \end{bmatrix} = \begin{bmatrix} 8192 & 12513 & 12513 \\ 0 & -3575 & 0 \\ 0 & 0 & -3575 \end{bmatrix} \cdot \begin{bmatrix} c_1 \\ c_2 \\ c_3 \end{bmatrix} \quad and \quad \begin{bmatrix} a_4 \\ a_5 \\ a_6 \end{bmatrix} = \begin{bmatrix} 8192 & 12513 & 12513 \\ 0 & -3575 & 0 \\ 0 & 0 & -3575 \end{bmatrix}$$

As a result, the following integer-valued displacements represent the refinement motion vector field of segment S_i:

EQUATION 23

$$\Delta x_{refine}(x,y) = a_1 + a_2 \cdot (y - y_o^{\,i}) + a_3 \cdot (x - x_o^{\,i}).$$

$$\Delta x_{refine}(x,y) = a_4 + a_5 \cdot (y - y_o^{\,i}) + a_6 \cdot (x - x_o^{\,i}).$$

where $x_O{}^i$ and $y_O{}^i$ are coordinates of the upper left-most pixel within the segment S_i. The superscript i indicates that these coordinates are associated with the current segment S_i.

In the exemplary implementation, the final set of affine coefficients for a given segment which uses the neighboring segment S_k for motion field prediction is calculated as in the following equation in which the superscripts i and k indicate that the corresponding coefficients are associated with S_i and S_k, respectively:

EQUATION 24

$$\begin{aligned} \beta_1^{\,I} &= a_1 + \Delta x_{prd}(x_O^{\,i}, y_O^{\,i}) \\ \beta_2^{\,I} &= a_2 + \beta_2^{\,K} \\ \beta_3^{\,I} &= a_3 + \beta_3^{\,K} \end{aligned} \quad and \quad \begin{aligned} \beta_4^{\,i} &= a_4 + \Delta y_{prd}(x_o^{\,i}, y_o^{\,i}) \\ \beta_5^{\,I} &= a_5 + \beta_5^{\,k} \\ \beta_6^{\,I} &= a_6 + \beta_6^{\,k} \end{aligned}$$

Based upon the integer-valued coefficients of $\beta_1 \ldots\ldots \beta_6$, the set of final motion vectors for the segment S_i is generated using equation 19. The way by which the motion vectors are used to calculate the pixel intensities from the reference frame is described below.

In the exemplary implementation, the presence of motion coefficients in the bitstream is signaled by one bit whenever refinement or nonrefinement motion coefficients can be expected. This bit is referred to as a motion coefficient indicator (MCI).

Also in the exemplary implementation, when motion coefficients are transmitted for a segment S_i, a variable-length code, referred to as a motion coefficient pattern (MCP) is first sent to indicate which coefficients have nonzero values. An all-zero pattern is the only non-valid pattern, as this possibility can be signaled by the MCI bit alone. The total number of valid patterns which can be indicated by the MCP codeword is sixty-three. This is a property of the affine model. As it has six coefficients, there are 2^6, i.e., 64, possible results. Thus, the MCP codeword has 63 possible values as zero is not valid. Following the MCP codeword are the encoded values of each non-zero motion coefficient indicated by the MCP pattern. The encoded values of each non-zero coefficient follow the MCP codeword. A motion coefficient c_j is encoded as an amplitude variable-length codeword indicating the absolute value of c_j followed by a sign bit indicating the sign of c_j. In the exemplary implementation, the same variable-length coding table is used to encode the amplitude of different coefficients. Different coding tables can be used. Zero-amplitude is not amongst the valid options as this possibility can be indicated by the MCP codeword.

The final motion vector field components calculated by using equation 19 correspond to a discretization step of:

EQUATION 25

$$D = \frac{1}{65536} = 0.0000152587890625$$

If $(\Delta x\ (x,y),\ \Delta y(x,\ y))$ denote final motion compensation displacements for segment S_i, then the corresponding non-integer coordinates in the previous frame are:

EQUATION 26

$$x' = x + \Delta x(x,y) \cdot D$$
$$y' = y + \Delta y(x,y) \cdot D$$

In the preferred implementation, the reference frame R_{ref} is of a size of M x N pixels with intensity values in the range $\{0,\ 1,\ .\ .\ .,\ 255\}$. The valid pixel coordinates (x',y') are defined only in the range of $\{0,\ 1,\ .\ .\ .,\ M\text{-}1\}$ x $\{0,\ 1,\ .\ .\ .\ ,\ N\text{-}1\}$. When motion compensated prediction requires evaluating the luminance and chrominance values at non-integer locations in the reference frame R_{ref} a discrete version of cubic convolution interpolation is used. In the exemplary implementation, fixed point precision is employed when calculating reconstruction values in the reference frame as described below.

First, the integer-valued displacements $(\Delta x(x,y),\ \Delta y(x,y))$ corresponding to the pixel (x,y) in segment S_i are expressed in modulo-65536 form as follows:

EQUATION 27

$$\Delta x(x,y) = dx \cdot 65536 + \delta x, \qquad \delta x \in \{0,1,\ldots,65535\}$$

$$\Delta x(x,y) = dy \cdot 65536 + \delta y, \qquad \delta y \in \{0,1,\ldots,65535\}$$

where dx, dy, δx, and δy are integer values with the latter two being always non-negative.

The x'_j, y'_k integer-valued coordinates of the four by four cubic convolution window are defined as:

EQUATION 28

$$x'_j = sat(x + dx + j\text{-}2, M\text{-}1), \qquad j=1,2,3,4$$
$$x'_k = sat(y + dy + k\text{ -}2, N\text{-}1), \qquad k=1,2,3,4$$

Wherein *sat(u,v)* is the saturation function as follows:

EQUATION 29

$$sat(u,v) = \begin{cases} 0 & u < 0 \\ u & 0 \le u \le v \\ v & u > v \end{cases}$$

Consequently, the sixteen integer pixel values r_{jk} used in the cubic convolution are as follows:

EQUATION 29

$$r_{jk} = R_{ref}(x'_j, y'_k) \qquad j,k = 1,2,3,4$$

where x'_j, y'_k are the integer-valued coordinates computed in equation 28.

Then, the convolution coefficients are computed. In the following, the integer division by truncation is denoted by "/" and both or its operands are always non-negative integers. By using integer truncation, following u_j, v_k j,k = 1, 2, 3, 4 are computed:

EQUATION 31

$$\begin{aligned} u_1 &= spl(\delta x / 256 + 256) & & v_1 = spl(\delta y / 256 + 256) \\ u_2 &= spl(\delta x / 256) & \textit{and} \quad & v_2 = spl(\delta y / 256) \\ u_3 &= spl(256 - (\delta x / 256)) & & v_3 = spl(256 - (\delta y / 256)) \\ u_4 &= 16384 - (u_1 + u_2 + u_3) & & v_4 = 16384 - (v_1 + v_2 + v_3) \end{aligned}$$

where δx, δy are the integer values of equation 27 and spl(s) is the integer-valued function of positive integer argument:

EQUATION 32

$$\mathrm{spl}(s) = \begin{cases} 16384 - (s^2 \cdot (1280 - 3 \cdot s) + 1024) / 2048 & s \in \{0,1,\ldots,255\} \\ -((t \cdot (65536 + t^2 - 512 \cdot t) + 1024) / 2048) & s \in \{256,\ldots,511\}, t = s - 256 \\ 0 & \text{otherwise} \end{cases}$$

Then the reference pixel value is computed. By using integer division by truncation, the reference pixel value is computed as follows:

EQUATION 33

$$r = sat\left(\left(\begin{bmatrix} r_{11} & r_{21} & r_{31} & r_{41} \\ r_{12} & r_{22} & r_{32} & r_{42} \\ r_{13} & r_{23} & r_{33} & r_{43} \\ r_{14} & r_{24} & r_{34} & r_{44} \end{bmatrix} \cdot \begin{bmatrix} u_1 \\ u_2 \\ u_3 \\ u_4 \end{bmatrix} / 256\right)^T \cdot \begin{bmatrix} v_1 \\ v_2 \\ v_3 \\ v_4 \end{bmatrix} + 2^{19}\right) / 2^{20}, 255)$$

where integer-valued coefficients r_{jk} are given by equation 30 and integer-valued coefficients u_j, v_k j,k = 1, 2, 3, 4 are given by equation 31 and function *sat(.,.)* is given by equation 29.

At the motion analyzer, the step of linearization is performed by employing a first order Taylor expansion of $R_{ref}(x,y)$ around:

EQUATION 34

$$x'_p = x_p + \Delta x(x_p, y_p)$$
$$y'_p = y_p + \Delta y(x_p, y_p)$$

with respect to x and y:

EQUATION 35

$$R_{ref}(x_p + \Delta x_{prd}(x_p, y_p) + \Delta x_{refine}(x_p, y_p), y_p + \Delta y_{prd}(x_p, y_p) + \Delta_{refine}(x_p y_p)) \approx R_{ref}(x'_p, y'_p) + (\Delta x_{refine}(x_p, y_p) + \Delta x_{prd}(x_p, y_p) - \Delta x(x_p, y_p)) \cdot G_x(x'_p, y'_p) + (\Delta y_{refine}(x_p, y_p) + \Delta y_{prd}(x_p, y_p) - \Delta y(x_p, y_p)) \cdot G_y(x'_p, y'_p)$$

$G_x(x'_p, y'_p)$ and $G_y(x'_p, y'_p)$ are values of the derivative of the reference frame R_{ref} with respect to x and y. Using such an approximation, the elements of matrix E_i and vector w_i in equation 14 are:

EQUATION 36

$$e_{pk} = \begin{cases} f_k(x_p, y_p) G_x(x'_p, y'_p), & k = 1,2,\ldots,N \\ f_k(x_p, y_p) G_y(x'_p, y_p), & k = N+1, N+2, \ldots, N+M \end{cases}$$

EQUATION 37

$$w_p = I_n(x_p, y_p) - R_{ref}(x'_p, y'_p) + G_x(x'_p, y'_p)\Delta x(x_p, y_p) + G_y(x'_p, y'_p)\Delta y(x_p, y_p) - G_x(x'_p, y'_p)\Delta x_{prd}(x_p, y_p) - G_y(x'_p, y'_p)\Delta y_{prd}(x_p, y_p)$$

The previous descriptions are of preferred examples for implementing the invention and, the scope of the invention should not necessarily be limited by this description. The scope of the present invention is defined by the following claims:

We claim:

1. In a method of operating on a video sequence, said video sequence being formed of at least a current video frame and a reference video frame, the current video frame comprising at least one first neighboring segment and a second neighboring segment, an improvement of a method for motion compensated prediction of the current video frame comprising:

retrieving a previously stored first motion field model, said first motion field model being a model of a first motion vector field describing the displacements of pixels in the first neighboring segment with respect to pixels in the reference video frame;

determining a second motion vector field describing displacements of pixels in the second neighboring segment of the current video frame with respect to pixels in the reference video frame;

modeling said second motion vector field using a motion model to form a second motion field model;

approximating said second motion field model on the basis of said first motion field model to form a prediction field model;

comparing said second motion field model with said prediction field model and forming a refinement field model, said refinement field model representing the difference between said second motion field model and said prediction field model;

constructing an alternative model representation of said second motion field model by making a summation of said prediction field model and said refinement field model;

calculating a first cost function wherein said first cost function includes a measure of a first image distortion incurred and a measure of a first amount of data required when using said second motion field model;

calculating a second cost function wherein said second cost function includes a measure of a second image distortion incurred and a

measure of a second amount of data required when using said alternative model representation of said second motion field;

comparing said first and second cost functions and determining which of said first and second cost functions has a smaller absolute value;

choosing that alternate one of said second motion field model and said alternative model representation of said second motion vector field associated with said smaller absolute value to indicate a chosen motion field model and storing said chosen motion field model.

2. A method according to claim 1 further including:

encoding information about said chosen motion field model.

3. A method according to claim 2 further including:

transmitting said coded information to a decoder for decoding.

4. A method according to claim 2 further including:

storing said coded information in a storage means.

5. A method according to claim 1 wherein each of said first motion field model, said second motion field model, said second motion field model, said prediction field model and said refinement field model is formed as a sum of motion field basis functions, each of said motion field basis functions being multiplied by a motion coefficient.

6. A method according to claim 5 wherein said motion field basis functions are orthogonal functions.

7. A method according to claim 6 wherein each of said first motion field model, said second motion field model, said prediction field model and said refinement field model is an affine motion field model.

8. A method according to claim 1 wherein said at least one first neighboring segment and said second neighboring segment are quadrilateral.

9. A method according to claim 1 further including:

dividing said at least one first neighboring segment into a plurality of sub-segments and using a motion field model of at least one of said sub-segments to form said prediction field model.

10. A method according to claim 1 wherein said prediction field model is formed by projecting the motion field model of said at least one neighboring segment.

11. A method according to claim 1 wherein said prediction field model is formed by averaging approximations of said second motion vector field determined from more than one first neighboring segment.

12. A method according to claim 1 wherein said prediction field model is formed by averaging approximations of said second field model determined from more than one first neighboring segment.

13. A method according to claim 1 wherein said step of calculating said first cost function is performed using a Lagrangian criterion.

14. A method according to claim 13 wherein said Lagrangian criterion has the form L = D +*lambda* x B where D is the distortion incurred when encoding a given set of motion coefficients, B is number of bits required to represent the motion coefficients and *lambda* is a multiplying Lagrangian parameter.

15. A method according to claim 1 wherein said prediction motion field and said refinement motion field are represented using a common set of basis functions.

16. A method according to claim 1 further including:

defining a first threshold value;

identifying a motion coefficient of said refinement field model with the smallest value of all motion coefficients of said refinement field model;

determining a third cost function incurred by setting said smallest motion coefficient to zero;

forming an approximation of said refinement field by setting said smallest valued motion coefficient to zero, in a situation in which said third image distortion does not exceed said first threshold value.

17. A method according to claim 1 wherein if said chosen motion field model is said second motion field model, said method further includes:

setting all motion coefficients of said prediction field model to zero;

setting all motion coefficients of said refinement field model equal to said motion coefficients of said second motion field model.

18. A method according to claim 17 wherein said encoding of information takes place in a manner depending on the chosen field model.

19. A method according to claim 18 wherein if said chosen field model is said second motion field model, said encoding of information includes the step of encoding said refinement field model.

20. A method according to claim 18 wherein if said chosen field model is said alternative model representation, said encoding of information includes the steps of:

encoding said prediction field model;

encoding said refinement field model.

21. A method according to claim 20 wherein said encoding of said refinement field model includes the steps of:

indicating, by said a motion coefficient indicator to one alternate of a first and a second value, that said encoded information includes said motion coefficients of said refinement field model;

indicating, by setting a motion coefficient pattern indicator, which of said motion coefficients have non-zero values;

encoding said non-zero motion coefficient values.

22. A method according to claim 21 wherein each of said non-zero motion coefficient values is encoded by indicating an amplitude value and a sign.

23. A method according to claim 20 wherein encoding of said prediction field model includes the steps of:

indicating, by setting a motion coefficient indicator to one alternate of a first and a second value, that said encoded information does not include motion coefficient values;

indicating, by setting a direction discrimination indicator, the direction with respect to said second neighboring segment of said at least one first neighboring segment from which said alternative model representation is constructed.

24. A method according to claim 23 wherein encoding of said prediction field model includes the further step of:

indicating, by setting a sub-segment discrimination indicator, a sub-segment of said at least one first neighboring segment from which said alternative model representation is constructed.

25. In a method of operating on a video sequence, said video sequence being formed of at least a current video frame and a reference video frame, the current video frame comprising at least one first neighboring segment and a second neighboring segment, an improvement of a method for motion compensated prediction of the current video frame including:

retrieving at least one previously stored first motion field model, said at least one first motion field model being a model of a first motion vector field describing the displacements of pixels in the at least one first neighboring segment with respect to pixels in the reference video frame

determining a second motion vector field describing displacements of pixels in the second neighboring segment of the current video frame with respect to pixels in the reference video frame;

modeling said second motion vector field using a motion model to form a second motion field model

approximating said second motion field model on the basis of said at least one first motion field model to form a prediction field model.

26. In a video device for operating upon a video sequence formed at least of a current video frame, the current video frame having at least a first neighboring segment and a second neighboring segment, an improvement of apparatus for forming an approximation of a motion vector field of the second neighboring segment, said apparatus comprising:

a motion vector field builder coupled to receive indications representative of a first affine motion model forming an approximation of a first motion vector field representative of the first neighboring segment and to receive indications of the second neighboring segment, said motion vector field builder for forming a second affine motion model responsive to the indications representative of the first affine motion model, the second affine motion model forming the approximation of the motion vector field of the second neighboring segment.

27. The apparatus of claim 26 wherein the video sequence is further formed of a reference video frame and wherein said motion vector field builder is further coupled to receive indications of the reference video frame and wherein the second affine motion model is responsive to an alternate one

of the indications representative of the first affine model and a selected portion of the reference video frame.

28. The apparatus of claim 27 wherein said motion vector field builder further calculates a second motion vector field, the second motion vector field calculated responsive to the selected portion of the reference video frame,

29. The apparatus of claim 28 wherein said motion vector field builder further determines differences between the second motion vector field and the second affine motion model, differences therebetween forming a refinement field model.

30. The apparatus of claim 29 wheein said motion vector field builder further constructs an alternative-representation model of the second motion vector field, the alternative-representation model of the second motion vector field formed of a combination of the refinement field model and of the second affine motion model.

31. The apparatus of claim 30 wherein said motion vector field builder further determines a cost function, the cost function at least in part a representation of image distortion and of data requirements related to at least a selected one of the second motion vector field and the second affine motion model.

32. The apparatus of claim 31 wherein said motion vector field builder further utilizes a selected one of the second motion vector field and the second affine motion model, selection made responsive to the cost function.

33. The apparatus of claim 27 wherein said motion vector field builder further selects which alternate one of the indications representative of the first affine model and the selected portion of the reference video frame responsive to which the second affine motion model is formed.

34. The apparatus of claim 26 wherein the first affine motion model has first affine motion coefficients associated therewith and wherein said motion vector field builder further projects values of the first affine motion model to form the second affine motion model.

35. The apparatus of claim 26 wherein the current video frame further has a third neighboring segment, the third neighboring segment adjacent to both the first neighboring segment and to the second neighboring segment, wherein said motion vector field builder is further coupled to receive indications of the second neighboring segment, and wherein said motion vector field builder is further for forming a third affine motion model responsive to a selected alternate one of the first affine motion model and the second affine motion model.

36. The apparatus of claim 35 wherein said motion vector field builder further selects which of the alternate one of the first affine motion model and the second affine motion model responsive to which the third affine motion model is formed.

37. The apparatus of claim 26 wherein the video device forms a video sequence generator having an encoder and wherein said motion vector field builder forms a portion of the encoder.

38. The apparatus of claim 26 wherein the video device forms a video sequence receiver having a decoder and wherein said motion field builder forms a portion of the decoder.

39. In a method for operating upon a video sequence formed of at least a current video frame, the current video frame having at least a first neighboring segment and a second neighboring segment, an improvement of a method for forming an approximation of a motion vector field of the second neighboring segment, said method comprising:

forming a first motion vector field representative of the first neighboring segment;

modeling the first motion vector field with a first affine motion model; and

forming a second affine motion vector model responsive to the first motion vector field modeled during said operation of modeling, the second affine motion model forming the approximation of the motion vector field of the second neighboring segment.

40. The method of claim 39 wherein the current video frame further comprises a third neighboring segment, the third neighboring segment adjacent to both the first neighboring segment and to the second neighboring segment, said method further for forming an approximation of a motion vector field of the third neighboring segment, said method comprising the further operation of:

forming a third affine motion model responsive to an alternate one of the first affine motion model and the second affine motion model.

41. The method of claim 39 wherein the video sequence is further formed of a reference video frame and wherein the second affine motion vector field formed during said operation of forming the second affine motion model is responsive to an alternate one of the first motion vector field and a portion of the reference frame.

42. The method of claim 41 further comprising the additional operation of selecting which of the first motion vector field and the reference frame responsive to which the second affine motion model is formed.

43. In a video device for operating upon a video sequence formed at least of a current video frame and a reference video frame, the current video frame having at least a first neighboring segment and a second neighboring

segment, an improvement of apparatus of forming an approximation of a motion vector field, said apparatus comprising:

a motion vector field builder coupled to receive indications representative of a selected one of the first neighboring segment and the second neighboring segment and indications representative of portions of the reference video frame, said motion vector field builder for determining a mapping between the selected one of the first and second neighboring segments and a selected portion of the reference video frame and for approximating the mapping with an affine motion model, the affine motion model forming the approximation of the motion vector field.

44. The apparatus of claim 43 wherein the selected one of the first neighboring segment and the second neighboring segment comprises the first neighboring segment and wherein the affine motion model forming the approximation of the motion vector field comprises a first affine motion model, the first affine motion model representative of the first neighboring segment.

45. The apparatus of claim 43 wherein the selected one of the first neighboring segment and the second neighboring segment further comprises the second neighboring segment, said motion vector field builder further for determining a mapping between the second neighboring segment and an alternate one of the selected portion of the reference video frame and the first neighboring segment, and wherein the affine motion model forming the approximation of the motion vector field further comprises a second affine motion model, the second affine motion model representative of the second neighboring segment.

46. The apparatus of claim 43 wherein the video device comprises a video sequence generator having an encoder and wherein said motion vector field builder comprises a portion of the encoder.

47. The apparatus of claim 43 wherein the video device comprises a video sequence receiver having a decoder and wherein said motion vector field builder comprises a portion of the decoder.

48. In a method of decoding a video sequence, said video sequence being formed of at least a current frame and a reference frame, the current frame comprising at least a first neighboring segment and a second neighboring segment, an improvement of a method for decoding said current video frame comprising the steps of:

receiving an indication of an information type;

receiving segment reconstruction information for said second neighboring segment;

selecting a segment reconstruction mode responsive to said indication;

reconstructing said second neighboring segment according to said selected segment reconstruction mode.

49. A method according to claim 48, wherein said selected segment reconstruction mode is one of a set of segment reconstruction modes comprising:

a first segment reconstruction mode wherein said segment reconstruction information comprises an indication of a first neighboring segment to be used in said step of reconstructing said neighboring segment;

a second segment reconstruction mode wherein said segment reconstruction information comprises motion coefficient information.

50. A method according to claim 49, wherein said set of segment reconstruction modes further comprises:

a third segment reconstruction mode wherein said segment reconstruction information comprises an indication of pixel values from said reference frame;

a fourth segment reconstruction mode wherein said segment reconstruction information comprises an indication of pixel values from said current frame.

51. A method according to claim 49, wherein said indication of a first neighboring segment comprises information about the position of said first neighboring segment with respect to said second neighboring segment.

52. A method according to claim 51, wherein said indication of a first neighboring segment further comprises information about a sub-segment within said first neighboring segment.

53. A method according to claim 49 wherein said motion coefficient information comprises an indication of at least one non-zero motion coefficient value.

54. A method according to claim 53, wherein said indication of at least one non-zero motion coefficient value comprises a non-zero coefficient pattern indication and at least one non-zero coefficient value.

55. A method according to claim 49, wherein said first segment reconstruction mode comprises using a prediction motion field model derived from a first motion field model representing said first neighboring segment.

56. A method according to claim 55, wherein said prediction motion field model is constructed by projecting said first motion field model from said first neighboring segment into said second neighboring segment.

57. A method according to claim 49, wherein said second segment reconstruction mode comprises using a refinement motion field model.

58. A method according to claim 57, wherein said refinement motion field model is represented by an indication of at least one motion coefficient value.

59. A method according to claim 57, wherein said refinement motion field model represents a difference between a second motion field model and said prediction motion field model, wherein said second motion field model is a representation of said second segment derived from said reference frame.

60. A method according to claim 57, wherein said refinement motion field model is a representation of said second segment derived from said reference frame.

61. In a method of encoding a video sequence, said video sequence being formed of at least a current video frame and a reference video frame, the current video frame comprising at least a first neighboring segment and a second neighboring segment, an improvement of a method for motion compensated prediction of the current video frame comprising:

defining a set of coding modes for said second neighboring segment;

calculating a set of cost functions, each one of said cost functions being associated with one of said set of coding modes;

choosing that one of said set of cost functions with a smallest absolute value;

defining that one of said set of coding modes associated with said smallest absolute value as a chosen coding mode for said second neighboring segment;

encoding information about said second neighboring segment according to said chosen coding mode.

62. A method according to claim 61 further comprising:
transmitting said encoded information to a decoder for decoding.

63. A method according to claim 61 further comprising:
storing said coded information in a storage means.

64. A method according to claim 61 wherein said set of coding modes comprises:

a first coding mode wherein a motion field model from said first neighboring segment is projected into said second neighboring segment to form a prediction motion field model and said second neighboring segment is represented by said prediction motion field model;

a second coding mode wherein said second neighboring segment is represented by a motion field model derived from said reference frame;

a third coding mode wherein a motion field model from said first neighboring segment is projected into said second neighboring segment to form a projection field model and said second neighboring segment is represented by said prediction motion field model and a refinement motion field model.

65. A method according to claim 64 wherein said set of coding modes further comprises:

a fourth coding mode wherein said second neighboring segment is encoded using pixel values from said reference frame;

a fifth coding mode wherein said second neighboring segment is encoded using pixel values from said current frame.

66. A method according to claim 64 wherein said refinement motion field model represents a difference between said motion field model derived from said reference frame and said prediction motion field model.

67. A method according to claim 64 wherein said prediction motion field model, said refinement motion field model and said motion field model

derived from said reference frame comprise a set of basis functions, each one of said basis functions being multiplied by a motion coefficient value.

68. A method according to claim 67 wherein said basis functions are orthogonal functions.

69. A method according to claim 68 wherein said prediction motion field model, said refinement motion field model and said motion field model derived from said reference frame are affine motion field models.

70. A method according to claim 61 wherein each one of said set of cost functions comprises a measure of an image distortion incurred and a measure of an amount of data required when using a given one of said coding modes.

71. A method according to claim 70 wherein each one of said set of cost functions is calculated using a Lagrangian criterion.

72. A method according to claim 71 wherein said Lagrangian criterion has the form L = D + *lambda* x B where D is a measure of the distortion incurred when encoding a given set of motion coefficients, B is the number of bits required to represent the motion coefficients and *lambda* is a Lagrangian parameter.

73. A method according to claim 67 wherein said prediction motion field and said refinement motion field are represented using a common set of basis functions.

74. A method according to claim 67 wherein said refinement motion field model is approximated by removing a motion coefficient.

75. A method according to claim 64 wherein said current frame comprises a plurality of first neighboring segments, said method further comprising:

forming a plurality of prediction motion field models, one for each of said plurality of first neighboring segments;

forming a plurality of refinement motion field models, each corresponding to a given one of said plurality of prediction motion field models.

76. A method according to claim 75 wherein said prediction motion field model is formed on the basis of more than one first neighboring segment.

77. A method according to claim 76 wherein said prediction motion field model is formed by averaging projections of motion field models from more than one first neighboring segment.

78. A method according to claim 64 wherein said method further comprises dividing said first neighboring segment into a plurality of sub-segments and using a motion field model of at least one of said sub-segments to form said prediction field motion model.

79. A method according to claim 61 wherein said encoding of information takes place in a manner depending on the chosen field model.

80. A method according to claim 79 wherein if said chosen coding mode is said second coding mode, said method further comprises setting all motion coefficients of said refinement motion field model equal to said motion coefficients of said motion field model derived from said reference frame.

81. A method according to claim 80 wherein said encoding of information comprises the step of encoding said refinement motion field model.

82. A method according to claim 79 wherein if said chosen coding mode is said first coding mode, said encoding of information comprises the step of encoding said prediction motion field model.

83. A method according to claim 79 wherein if said chosen coding mode is said third coding mode, said encoding of information comprises the steps of:

encoding said prediction motion field model;

encoding said refinement motion field model.

84. A method according to claim 81 wherein said encoding of said refinement motion field model comprises the steps of:

indicating by setting a motion coefficient indicator to one alternate of a first and a second value that said encoded information includes said motion coefficients of said refinement field model;

indicating by setting a motion coefficient indicator, which of said motion coefficients of said refinement field model have non-zero values;

encoding said non-zero values.

85. A method according to claim 83 wherein said encoding of said refinement motion field model comprises the steps of:

indicating by setting a motion coefficient indicator to one alternate of a first and a second value that said encoded information includes said motion coefficients of said refinement field model;

indicating by setting a motion coefficient pattern indicator, which of said motion coefficients of said refinement field model have non-zero values;

encoding said non-zero values.

86. A method according to claim 84 wherein each of said non-zero coefficient values is encoded by indicating an amplitude and a sign.

87. A method according to claim 82 wherein encoding of said prediction motion field model comprises indicating, by setting a motion coefficient indicator to one alternate of a first and a second value, that said encoded information does not include motion coefficient values.

88. A method according to claim 87 wherein encoding of said prediction motion field model further comprises indicating a direction identifying the relative position with respect to said second neighboring segment of said first neighboring segment from which said prediction motion field model is formed.

89. A method according to claim 88 wherein encoding of said prediction motion field model further comprises indicating by setting a sub-segment discrimination indicator, a sub-segment of said first neighboring segment from which said prediction motion field model is formed.

90. A method according to claim 83 wherein encoding of said prediction motion field model comprises indicating, by setting a motion coefficient indicator to one alternate of a first and a second value, that said encoded information does not include motion coefficient values.

91. A method according to claim 90 wherein encoding of said prediction motion field model further comprises indicating a direction identifying the relative position with respect to said second neighboring segment of said first neighboring segment from which said prediction motion field model is formed.

92. A method according to claim 91 wherein encoding of said prediction motion field model further comprises indicating by setting a sub-segment discrimination indicator, a sub-segment of said first neighboring segment from which said prediction motion field model is formed.

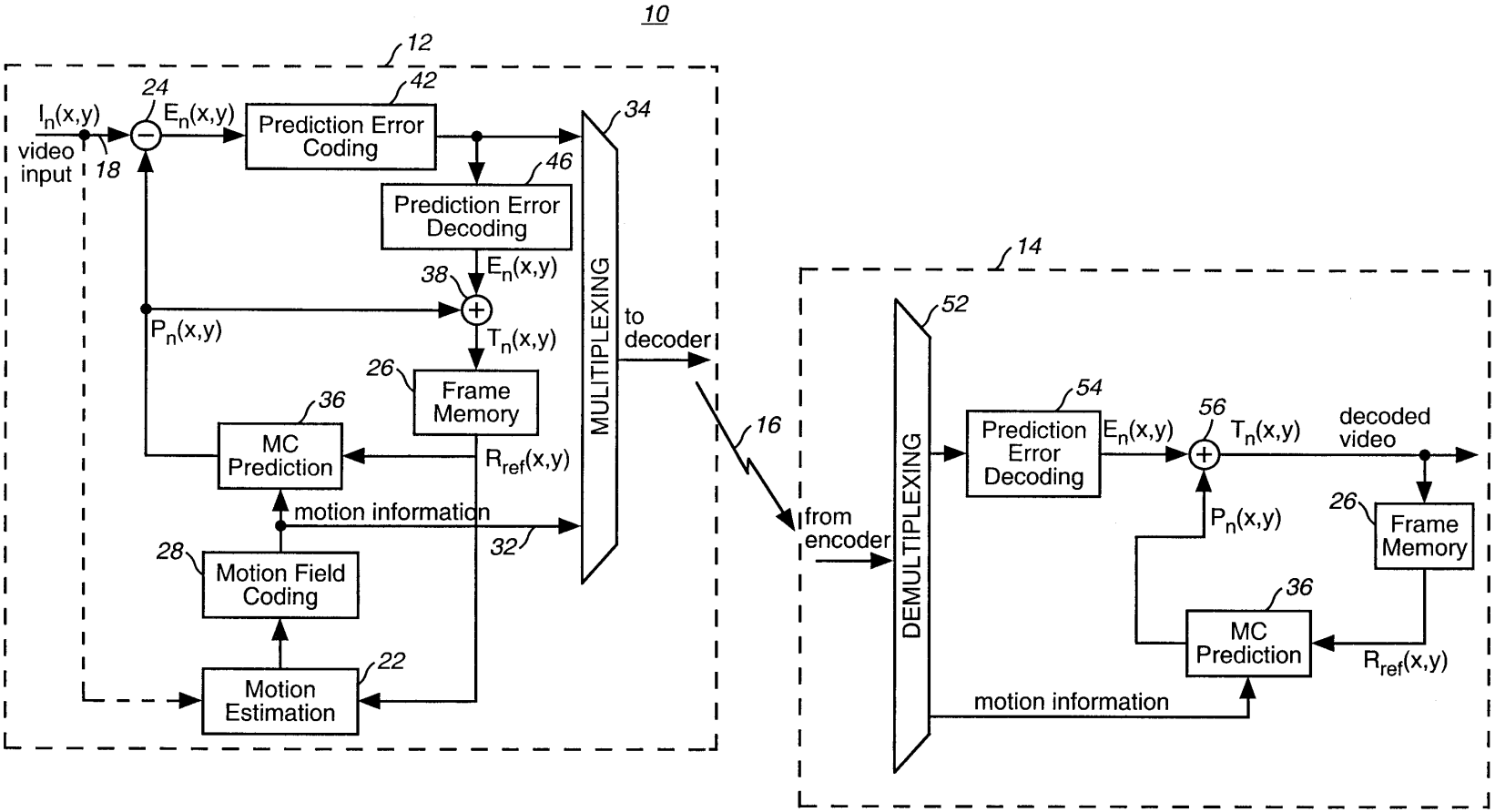
10
12
24
42
34
$I_n(x,y)$
$E_n(x,y)$
Prediction Error Coding
video input
18
46
Prediction Error Decoding
38
$E_n(x,y)$
$P_n(x,y)$
$T_n(x,y)$
MULITIPLEXING
to decoder
26
Frame Memory
36
MC Prediction
$R_{ref}(x,y)$
motion information
32
28
Motion Field Coding
22
Motion Estimation
16
14
52
from encoder
DEMULTIPLEXING
54
Prediction Error Decoding
$E_n(x,y)$
56
$T_n(x,y)$
decoded video
$P_n(x,y)$
26
Frame Memory
36
MC Prediction
$R_{ref}(x,y)$
motion information

FIG. 1

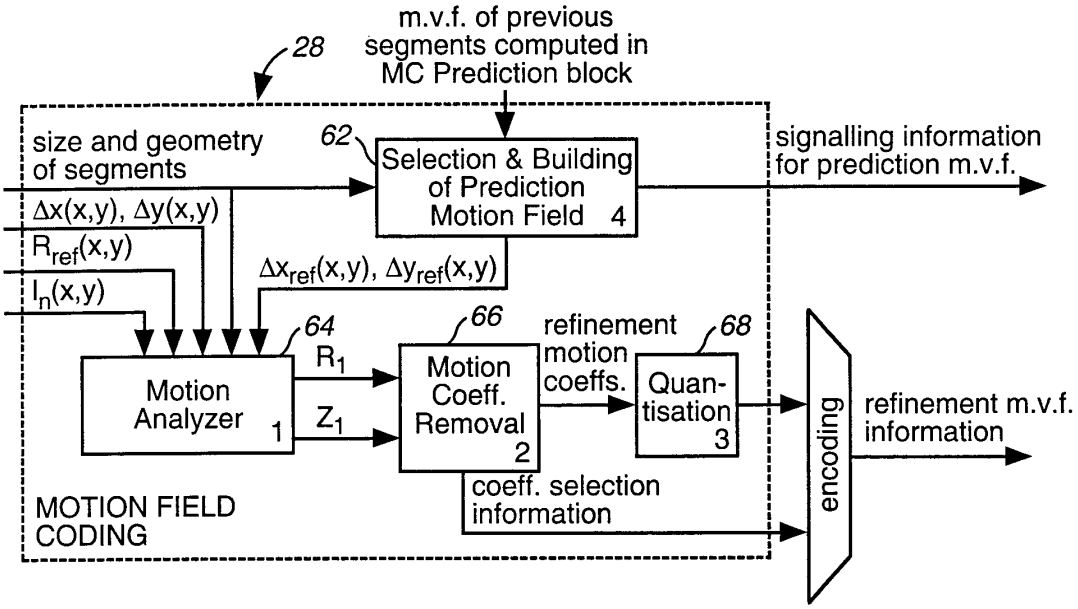
m.v.f. of previous segments computed in MC Prediction block
28
size and geometry of segments
62
Selection & Building of Prediction Motion Field 4
signalling information for prediction m.v.f.
Δx(x,y), Δy(x,y)
R_ref(x,y)
I_n(x,y)
Δx_ref(x,y), Δy_ref(x,y)
64
66
refinement motion coeffs.
68
R_1
Motion Analyzer 1
Z_1
Motion Coeff. Removal 2
Quan-tisation 3
encoding
refinement m.v.f. information
coeff. selection information
MOTION FIELD CODING

FIG. 2

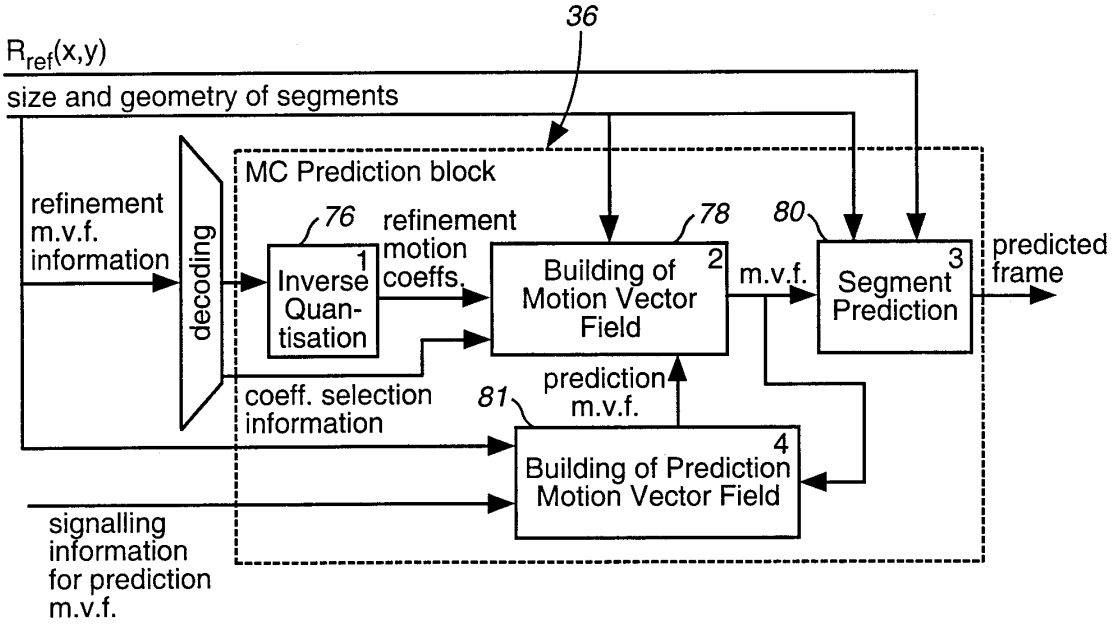
36
R_ref(x,y)
size and geometry of segments
MC Prediction block
refinement m.v.f. information
decoding
76
refinement motion coeffs.
78
80
Inverse Quan-tisation 1
Building of Motion Vector Field 2
m.v.f.
Segment Prediction 3
predicted frame
coeff. selection information
81
prediction m.v.f.
Building of Prediction Motion Vector Field 4
signalling information for prediction m.v.f.

FIG. 3

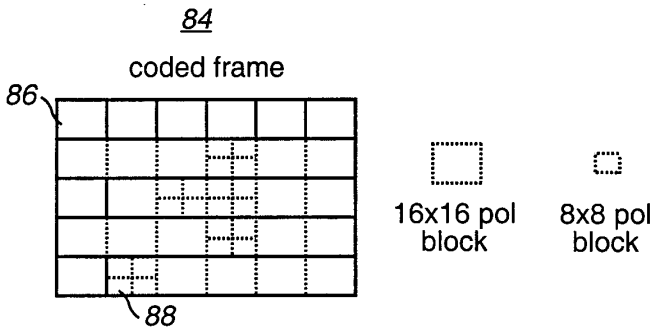

FIG. 4

92

Table 1

Number of candidates from up	Number of candidates from left	Presence of direction bit	Presence of discrimination bit	Direction of winning candidate	Number of selection bits
0	1	X	X	X	None
1	0	X	X	X	None
0	2	X	Yes	X	1
2	0	X	Yes	X	1
1	1	Yes	X	X	1
2	2	Yes	Yes	X	2
2	1	Yes	Yes	From up	2
2	1	Yes	X	From left	1
1	2	Yes	Yes	From left	2
1	2	Yes	X	From up	1

FIG. 5

INTERNATIONAL SEARCH REPORT

Interr. nal Application No
PCT/US 00/21823

A. CLASSIFICATION OF SUBJECT MATTER
IPC 7 H04N7/26

According to International Patent Classification (IPC) or to both national classification and IPC

B. FIELDS SEARCHED

Minimum documentation searched (classification system followed by classification symbols)
IPC 7 H04N

Documentation searched other than minimum documentation to the extent that such documents are included in the fields searched

Electronic data base consulted during the international search (name of data base and, where practical, search terms used)

EPO-Internal

C. DOCUMENTS CONSIDERED TO BE RELEVANT

Category °	Citation of document, with indication, where appropriate, of the relevant passages	Relevant to claim No.
Y	GB 2 317 525 A (NOKIA MOBILE PHONES LTD) 25 March 1998 (1998-03-25) the whole document ---	1-92
Y	GB 2 329 783 A (DAE WOO ELECTRONICS CO LTD) 31 March 1999 (1999-03-31) abstract claims ---	1-92
A	STUHLMUELLER K W ET AL: "RATE-CONSTRAINED CONTOUR-REPRESENTATION FOR REGION-BASED MOTION COMPENSATION" PROCEEDINGS OF THE SPIE, March 1996 (1996-03), XP000900459 paragraph '0003!; figure 4 ---	1-92

-/--

[X] Further documents are listed in the continuation of box C.

[X] Patent family members are listed in annex.

° Special categories of cited documents :

"A" document defining the general state of the art which is not considered to be of particular relevance
"E" earlier document but published on or after the international filing date
"L" document which may throw doubts on priority claim(s) or which is cited to establish the publication date of another citation or other special reason (as specified)
"O" document referring to an oral disclosure, use, exhibition or other means
"P" document published prior to the international filing date but later than the priority date claimed

"T" later document published after the international filing date or priority date and not in conflict with the application but cited to understand the principle or theory underlying the invention
"X" document of particular relevance; the claimed invention cannot be considered novel or cannot be considered to involve an inventive step when the document is taken alone
"Y" document of particular relevance; the claimed invention cannot be considered to involve an inventive step when the document is combined with one or more other such documents, such combination being obvious to a person skilled in the art.
"&" document member of the same patent family

Date of the actual completion of the international search	Date of mailing of the international search report
17 November 2000	27/11/2000

Name and mailing address of the ISA	Authorized officer
European Patent Office, P.B. 5818 Patentlaan 2 NL - 2280 HV Rijswijk Tel. (+31-70) 340-2040, Tx. 31 651 epo nl, Fax: (+31-70) 340-3016	Foglia, P

1

Form PCT/ISA/210 (second sheet) (July 1992)

Snap - Exhibit 1006
Snap v. Nokia - IPR2025-01439
Page 64 of 66

INTERNATIONAL SEARCH REPORT

Intern .nal Application No
PCT/US 00/21823

C.(Continuation) DOCUMENTS CONSIDERED TO BE RELEVANT

Category °	Citation of document, with indication,where appropriate, of the relevant passages	Relevant to claim No.
A	WO 97 40628 A (NOKIA MOBILE PHONES LTD ;KARCZEWICZ MARTA (FI); NIEWEGLOWSKI JACEK) 30 October 1997 (1997-10-30) page 8 -page 14 ---	1-92
A	US 5 778 192 A (KATSAGGELOS AGGELOS ET AL) 7 July 1998 (1998-07-07) abstract column 6, line 35 -column 12, line 15 ---	1-92
A	NICOLAS H ET AL: "TEMPORAL REDUNDANCY REDUCTION USING A MOTION MODEL HIERARCHY AND TRACKING FOR IMAGE SEQUENCE CODING" SPIE VISUAL COMMUNICATIONS AND IMAGE PROCESSING,XX,XX, vol. 2094, 8 November 1993 (1993-11-08), pages 1548-1557, XP002050743 paragraph '0001! - paragraph '0004! ---	1-92
A	WO 97 16025 A (NOKIA MOBILE PHONES LTD ;KARCZEWICZ MARTA (FI); NIEWEGLOWSKI JACEK) 1 May 1997 (1997-05-01) the whole document -----	

1

Form PCT/ISA/210 (continuation of second sheet) (July 1992)

Snap - Exhibit 1006
Snap v. Nokia - IPR2025-01439
Page 65 of 66

INTERNATIONAL SEARCH REPORT

Information on patent family members

Intern nal Application No
PCT/US 00/21823

Patent document cited in search report		Publication date	Patent family member(s)			Publication date
GB 2317525	A	25-03-1998	AU	4133197	A	14-04-1998
			EP	0927494	A	07-07-1999
			WO	9812877	A	26-03-1998
GB 2329783	A	31-03-1999	CN	1213253	A	07-04-1999
			DE	19743202	A	01-04-1999
			FR	2769162	A	02-04-1999
			JP	11112989	A	23-04-1999
			US	5978048	A	02-11-1999
WO 9740628	A	30-10-1997	AU	5501296	A	12-11-1997
			EP	0894403	A	03-02-1999
US 5778192	A	07-07-1998	NONE			
WO 9716025	A	01-05-1997	AU	3701495	A	15-05-1997
			DE	69511119	D	02-09-1999
			DE	69511119	T	03-02-2000
			EP	0856228	A	05-08-1998

Form PCT/ISA/210 (patent family annex) (July 1992)