UNITED STATES INTERNATIONAL TRADE COMMISSION
WASHINGTON, D.C.

Before The Honorable Doris Johnson Hines
Administrative Law Judge

In the Matter of **CERTAIN VIDEO CAPABLE ELECTRONIC DEVICES, INCLUDING COMPUTERS, STREAMING DEVICES, TELEVISIONS, CAMERAS, AND COMPONENTS AND MODULES THEREOF**	**Investigation No. 337-TA-1379**

RESPONDENTS' JOINT DISCLOSURE OF FINAL INVALIDITY CONTENTIONS IN RESPONSE TO INDIVIDUAL INTERROGATORY NOS. 7-9

TABLE OF CONTENTS

Page

I. INTRODUCTION 1

II. GENERAL RESERVATIONS 1

III. PERSON OF ORDINARY SKILL IN THE ART 5

IV. U.S. PATENT NO. 7,532,808 5

A. Identification of Relevant Prior Art 5

1. Prior Art Patent Publications 7
2. Prior Art Non-Patent Publications 9
3. Prior Art Items and/or Knowledge 18
4. Prior Art Under 35 U.S.C. §§ 102(f) and 102(g) 18

B. Anticipation and Obviousness 23

1. Frojdh in view of Hwang and AAPA 28
2. Karczewicz 37
3. Yamada 40
4. Srinivasan 41
5. Jozawa 41
6. Sun 42
7. Moore 43
8. VCEG-N77 44
9. MPEG-1 45
10. H.263+ 51

C. Other Invalidity Grounds 56

11. 35 U.S.C. § 101 – Ineligible Subject Matter 57
12. 35 U.S.C. § 112(a) – Enablement and Written Description 58
13. 35 U.S.C. § 112(b) – Indefiniteness 60

V. U.S. PATENT NO. 8,204,134 61

A. Identification of Relevant Prior Art 61

1. Prior Art Patent Publications 62
2. Prior Art Non-Patent Publications 65
3. Prior Art Items and/or Knowledge 73
4. Prior Art Under 35 U.S.C. §§ 102(f) and 102(g) 73

Nokia Exhibit 2014, p. 2
Snap/Hisense v. Nokia
IPR2025-01440

B. Anticipation and Obviousness 74

1. Casavant in view of Oliver, Lyon and/or Ran 78
2. Yagasaki in view of Oliver, Lyon and Ran..... 86
3. Kelly in view of Lee 96
4. Sun 99
5. Apostolopoulos 99
6. Bolduc 100
7. Fung I and Fung II 101
8. H.264..... 101

C. Other Invalidity Grounds 104

9. 35 U.S.C. § 101 – Ineligible Subject Matter..... 104
10. 35 U.S.C. § 112(a) – Enablement and Written Description..... 105
11. 35 U.S.C. § 112(b) – Indefiniteness..... 108

VI. UNENFORCEABILITY..... 109

A. Laches, Acquiescence, and Waiver..... 109

Nokia Exhibit 2014, p. 3
Snap/Hisense v. Nokia
IPR2025-01440

I. INTRODUCTION

Pursuant to the Procedural Schedule set in Order No. 13, Respondents HP, Inc. f/k/a Hewlett-Packard Company, Amazon.com, Inc., and Amazon Services LLC (collectively "Respondents") hereby provide their final invalidity contentions for U.S. Patent No. 7,532,808 ("the '808 patent") and U.S. Patent No. 8,204,134 ("the '134 patent") (collectively, "the asserted patents"). Complainants Nokia Technologies Oy and Nokia Corporation ("Nokia" or "Complainants") assert claims 1-2, 6-7, 9-11, 15-16, 20-25, 28-30, 32, 34, 36, 39-41, 43-44, 47-49, 51-54, 58-60, and 62-65 of the '808 patent and claims 1-22 of the '134 patent (collectively, "the asserted claims").

These contentions are Respondents' supplemental responses to Nokia's contention interrogatories, including at least Interrogatory Nos. 7-9. Each Respondent's supplemental responses to Nokia's burden contention interrogatories incorporate and attach these invalidity contentions in accordance with Order No. 13. *See* Respondent Amazon's Second Supplemental Response to Interrogatory No. 8 and Fourth Supplemental Responses to Interrogatory Nos. 7, 9 and Respondent HP's Sixth Supplemental Responses to Interrogatory Nos. 7-9.

II. GENERAL RESERVATIONS

Respondents reserve the right to revise or supplement these contentions in light of party and third-party discovery, Nokia's infringement contentions, any claim construction order issued by the ALJ, review and analysis by expert witnesses, and further investigation and discovery regarding the defenses asserted by Respondents. For example, Respondents expressly reserve the right to amend these contentions after review of Nokia's infringement contentions, after review of Nokia's validity contentions, after issuance of a claim construction order, should Nokia provide any information that it failed to provide in its disclosures, or if Nokia amends its disclosures in any way. Because discovery is ongoing Respondents reserve the right to revise, amend, and/or

supplement the information provided herein, including identifying, charting, and relying on additional references. Respondents additionally reserve their rights to revise, amend, or supplement when Nokia provides additional discovery. Further, Respondents reserve the right to revise their contentions concerning the invalidity of the asserted claims, which may change depending upon further and ongoing investigation, the construction of the asserted claims and/or positions that Nokia or expert witnesses may take concerning claim construction, infringement, and/or invalidity issues.

To the extent that the following contentions reflect constructions of claim limitations consistent with or implicit in Nokia's infringement allegations as set forth in the Complaint, no inference is intended nor should any be drawn that Respondents agree with Nokia's infringement allegations or claim interpretations, and Respondents expressly reserve the right to contest such allegations. Respondents offer such contentions in response to Nokia's infringement allegations as set forth in the Complaint and without prejudice to any position that Respondents may ultimately take as to any claim construction issues. Specifically, Respondents base these final invalidity contentions at least in part upon the claim scope and certain claim constructions that are implicitly or explicitly asserted by Nokia, and nothing herein should be construed or represented as evidencing any express or implied agreement with any of Nokia's claim construction or infringement positions.

Respondents intend to rely on admissions concerning the scope of the prior art relevant to the asserted patents found in, *inter alia*: the asserted patents and related patents and/or patent applications; the patent prosecution histories for the asserted patents and related patents and/or patent applications (including all prior art cited therein); any deposition testimony of the named inventors on the asserted patents and related patents and/or patent applications in this matter or

Nokia Exhibit 2014, p. 5
Snap/Hisense v. Nokia
IPR2025-01440

any other matter; evidence and testimony relating to the level of ordinary skill in the art; and the papers filed and any evidence submitted by Nokia in connection with this matter.

Respondents' claim charts cite to particular teachings and disclosures of the prior art as applied to features of the asserted claims. However, persons having ordinary skill in the art generally may view an item of prior art in the context of other publications, literature, products, and understanding. As such, the cited portions are only examples, and Respondents reserve the right to rely on uncited portions of the prior art references and on other publications, expert testimony, and other evidence as aids in understanding and interpreting the cited portions, as providing context thereto, and as additional evidence that the prior art discloses a claim limitation or any of the asserted claims as a whole. Respondents further reserve the right to rely on uncited portions of the prior art references, other publications, and testimony, including expert testimony, to establish bases for combinations of certain cited references that render the asserted claims obvious.

The references discussed in the claim charts may disclose the elements of the asserted claims explicitly and/or inherently, and/or they may be relied upon to show the state of the art in the relevant timeframe. The suggested obviousness combinations are provided in addition to and/or in the alternative to Respondents' anticipation contentions and are not to be construed to suggest that any reference included in the combinations is not by itself anticipatory. The combinations of prior art references referred to in these final invalidity contentions are exemplary. Respondents reserve the right to rely on any combination of prior art references identified in the initial contentions and these final contentions served in accordance with Order No. 13. The rationale or motivations to combine the prior art references identified in these invalidity contentions are also

Nokia Exhibit 2014, p. 6
Snap/Hisense v. Nokia
IPR2025-01440

exemplary. Respondents further reserve the right to amend or supplement the rationale or motivation to combine the prior art references identified in their invalidity contentions.

The following discussion and exhibits provide exemplary prior art citations and obviousness positions. The citations and discussion in the charts are organized by claim (and claim limitation) for convenience, but each limitation or claim section applies to the larger context of each claim, to any related dependent or independent claims, as well as all claims containing similar limitations or elements. For example, citations as to any recited limitation, step, or component in the claims apply wherever each such limitation, step, or component is repeated elsewhere in the claim or asserted patents. Where Respondents cite to a particular drawing or figure in the attached claim charts, the citation encompasses the description of the drawing or figure, as well as any text associated with the drawing or figure. Similarly, where Respondents cite to particular text concerning a drawing or figure, the citation encompasses that drawing or figure as well. Relatedly, certain portions of patent or other prior art disclosures build upon other disclosures, even if they are referred to as a separate or alternative embodiment. Thus, Respondents' citations to structures or functions incorporate by reference all disclosures to related structures or functions, including any additional detail provided as to the operation or design of those structures or functions.

Discovery of inventors is ongoing. Respondents reserve the right to assert that the asserted claims are invalid under 35 U.S.C. § 102(f) in the event Respondents obtain additional evidence that the inventors of the asserted patents did not invent the subject matter claimed therein. Should Respondents obtain such evidence, they will provide the name of the person(s) from whom and the circumstances under which the alleged invention or any part of it was derived.

Respondents also reserve the right to challenge any of the claim terms herein under 35 U.S.C. § 112 beyond the grounds outlined in their responses to interrogatories related to invalidity,

Nokia Exhibit 2014, p. 7
Snap/Hisense v. Nokia
IPR2025-01440

including by arguing that they are indefinite, not supported by the written description, or not enabled. Nothing stated herein shall be construed as a waiver of any argument available under 35 U.S.C. §§ 101, 102, 103, and/or 112.

III. PERSON OF ORDINARY SKILL IN THE ART

A person of ordinary skill in the art ("POSITA") at the time of the alleged invention of the asserted patents would have had a (1) Bachelor's degree in electrical engineering, computer engineering, computer science, or a comparable field of study, and (2) approximately two to three years of practical experience with video and/or image processing or coding. Additional experience can substitute for the level of education, and vice-versa.

IV. U.S. PATENT NO. 7,532,808

A. Identification of Relevant Prior Art

Respondents identify the following prior art references that anticipate and/or render obvious the asserted claims of the asserted patents. The following patents and publications are prior art under at least 35 U.S.C. §§ 102(a), (b), (e), (f), and/or (g). Whether a prior art reference anticipates or renders obvious the asserted claims of the '808 patent may depend upon claim construction. Respondents have identified each prior art patent by its inventor, title, number, country of origin, date of filing, date of issue, and, where applicable, the relevant priority date, or such information may be derived from the face of the patent. Each prior art publication is identified by its title, date of publication, and, where feasible, author and publisher. For prior art under 35 U.S.C. § 102(b), Respondents have identified the item offered for sale or publicly used or known, the date by which the offer or use took place or the information became known, and the identity of the person or entity which made the use or which made and received the offer, or the person or entity which made the information known or to whom it was made known, to the full extent currently known.

Nokia Exhibit 2014, p. 8
Snap/Hisense v. Nokia
IPR2025-01440

Based on the information reasonably available to Respondents, the priority date for the ’808 patent is March 14, 2003, the filing date of Application No. 10/390,549 that led to the issuance of the ’808 patent. The ’808 patent purports to claim the benefit of the filing date of U.S. Provisional Application No. 60/365,072, filed on March 15, 2002.

Yet, at least two limitations in claim 1, at least two limitations in claim 7, at least three limitations in claim 10, at least two limitations of claim 16, and numerous dependent claims of the ’808 patent lack written description support in U.S. Patent Application No. 60/365,072 (March 15, 2002). These claim limitations are, for example:

- 1[b], 10[b], 7[b], 16[b]: assigning either a zero motion vector or a predicted non-zero motion vector for the skip coding mode for the first segment;
- 1[d], 10[d]: providing in an encoded bitstream an indication of the skip coding mode;
- 7[a], 16[a]: receiving an indication of a skip coding mode;
- 10[a]: a coding controller for assigning a skip coding mode to a first segment;
- 10[d]: a multiplexer for providing in an encoded bitstream an indication of the skip coding mode;
- 16[a]: a demultiplexer for receiving an indication of a skip coding mode assigned to a first segment;
- 16[b]: a motion compensated prediction block for assigning either a zero motion vector or a predicted non-zero motion vector for the skip coding mode for the first segment based at least in part on the motion information of a second segment neighboring the first segment;

Nokia Exhibit 2014, p. 9
Snap/Hisense v. Nokia
IPR2025-01440

- 2, 11: wherein the second segment is a previously encoded segment neighboring the first segment;
- 21, 22: a multimedia terminal;
- 25, 43, 53, 63: the second segment is predicted using motion-compensated prediction from a second reference picture immediately preceding the picture second segment belongs to;
- 29, 40, 48, 59: deriving the predicted non-zero motion vector based at least in part on the motion vector of the second segment and motion vector of a third segment neighboring the first segment;
- 30, 41, 49, 60: wherein no residual information is provided for the first segment in the encoded bitstream.

Nokia bears the burden of showing on a claim-by-claim basis that it is entitled to a priority date earlier than March 14, 2003, including the filing date and description of the alleged inventions claimed in the '808 patent in any earlier provisional application. Nokia has not done so. In fact, while Nokia's responses to Interrogatory No. 3 identify numerous alleged disclosures from the provisional (Application No. 60/365,072), none of those disclosures provide any support for the limitations specified above. If Nokia contends or demonstrates that any of the asserted claims of the '808 patent are entitled to a priority date before March 14, 2003, then Respondents reserve the right to identify additional prior art references which anticipate or make obvious the asserted claims of the '808 patent.

1. Prior Art Patent Publications

Respondents contend that the asserted claims are invalid under 35 U.S.C. §§ 102 and/or 103 based on the following prior art patent publications. These patent publications constitute prior

art under 35 U.S.C. § 102, and their patent numbers, countries of origin, and dates of publication and/or issue are included on the face of those documents. Respondents reserve the right to supplement this list as it learns in the course of discovery of other prior art patent publications that would anticipate and/or render the asserted claims obvious.

Country	Number	First Named Inventor/ Patentee
U.S.	5,148,272	Acampora
U.S.	5,151,784	Lavagetto
U.S.	5,191,436	Yonemitsu
U.S.	5,398,068	Liu
U.S.	5,442,400	Sun
U.S.	5,448,297	Alattar
U.S.	5,552,832	Astle
U.S.	5,619,281	Jung
U.S.	5,689,307	Sugahara
U.S.	5,699,129	Tayama
U.S.	5,701,164	Kato
U.S.	5,724,446	Liu
U.S.	5,748,789	Lee
U.S.	5,781,249	Hwang
U.S.	5,784,108	Skaletzky
U.S.	5,946,043	Lee
U.S.	6,097,842	Suzuki
U.S.	6,192,148	Lin
U.S.	6,295,376	Nakaya
U.S.	6,430,222	Okada
U.S.	6,498,810	Kim
U.S.	6,560,280	Sachar
U.S.	6,658,157	Satoh
U.S.	6,683,987	Sugahara
U.S.	6,785,331	Jozawa
U.S.	6,895,048	Boice
U.S.	6,931,070	Moore
U.S.	7,050,500	Sun
U.S.	7,200,275	Srinivasan
U.S.	7,215,710	Yamada
U.S.	7,532,808	Lainema
U.S.	2003/0123738	Frojdh
U.S.	2001/0001614	Boice
EP	0 863 674 A2	Eifrig
EP	1 185 104 A1	Hobson

Country	Number	First Named Inventor/ Patentee
JP	08-126012	Arai
JP	2001-251627	Kuriki
WO	1998/036577	Jozawa
WO	2001/011891	Karczewicz

2. Prior Art Non-Patent Publications

Respondents contend that the asserted claims are invalid under 35 U.S.C. §§ 102 and/or 103 based on the following published works of prior art. These publications constitute additional prior art under 35 U.S.C. § 102, and their titles, authors, publishers, and dates of publication are included on the face of those documents. In addition to the references listed below, Respondents hereby disclose as prior art publications all references disclosed below in Section 3 (regarding on sale/public use), such as press releases, users manuals, and other related documentation about such prior art products. Respondents reserve the right to supplement this list as it learns in the course of discovery of other references, prior art public use, and/or sale that would anticipate and/or render the asserted claims obvious.

Title	Publication	Date	Name of First Author
Fast Multiresolution Motion Vector Estimation for Video Coding by Using Spatial Correlation	SPIE Proc. Vol. 2564, Applications of Digital Image Processing XVIII, (22 August 1995)	8/22/1995	Chalidabhongse, Junavit
Simulation Results of Reference Model 8	CCITT SGXV Working Party XV/1	6/1989	Specialists Group on Coding for Visual Telephony
An Improved Multiresolution Motion Estimation Algorithm	Acta Scientarium Naturalium Universitatis Sunyatseni, Vol. 40, No. 2	3/2001	H.M. Liu
Motion estimation using interblock correlation	IEEE International Symposium on Circuits and Systems	1990	Chaur-Heh Hsieh
ISO/IEC 11172-2:1993 Information technology — Coding of moving pictures and associated audio for		8/1/1993	ISO/IEC

Nokia Exhibit 2014, p. 12
Snap/Hisense v. Nokia
IPR2025-01440

Title	Publication	Date	Name of First Author
digital storage media at up to about 1,5 Mbit/s — Part 2: Video ("MPEG-1")			
Text of 14496-7 PDTR; Optimization Model Version 3.0	ISO/IEC PDTR 14496-7	7/2001	International Organisation for Standardisation; ISO/IEC JTC1/SC29/WG11
DRAFT ITU-T Recommendation H.263		5/1996	ITU/T
ITU-T Recommendation H.263: Video coding for low bit rate communication		2/1998	ITU/T
ITU-T Recommendation H.324		2/1998	ITU/T
GMVC and GMC switched by MV (JVT-B046)	Joint Video Team (JVT) of ISO/IEC MPEG & ITU-T VCEG (ISO/IEC JTC1/SC29/WG11 and ITU-T SG16 Q.6) 2nd Meeting: Geneva, CH	1/29/2002-2/1/2002	Hideaki Kimata
GMVC and GMC with B-picture (JVT-C043)	Joint Video Team (JVT) of ISO/IEC MPEG & ITU-T VCEG (ISO/IEC JTC1/SC29/WG11 and ITU-T SG16 Q.6); 3rd Meeting: Fairfax, Virginia, USA	5/6/2002-5/10/2002	Hideaki Kimata
Proposal of Global Motion Compensation enhancing Global Motion Vector Coding scheme (VCEG-O29)	ITU - Telecommunications Standardization Sector; Study Group 16 Question 6; Video Coding Experts Group (VCEG); 15th Meeting: Pattaya, Thailand	12/3/2001-12/7/2001	Hideaki Kimata
Proposal of Global Motion Compensation enhancing Global Motion Vector Coding scheme (VCEG-O29r1)	ITU - Telecommunications Standardization Sector; Study Group 16 Question 6; Video Coding Experts Group (VCEG); 15th Meeting: Pattaya, Thailand	12/3/2001-12/7/2001	Hideaki Kimata
Proposal of Global Motion Compensation enhancing Global Motion Vector Coding scheme (VCEG-O29r2)	ITU - Telecommunications Standardization Sector; Study Group 16 Question 6; Video Coding Experts Group	12/3/2001-12/7/2001	Hideaki Kimata

Nokia Exhibit 2014, p. 13
Snap/Hisense v. Nokia
IPR2025-01440

Title	Publication	Date	Name of First Author
	(VCEG); 15th Meeting: Pattaya, Thailand		
Proposal of GMVC syntax (VCEG-O28)	ITU - Telecommunications Standardization Sector; Study Group 16 Question 6; Video Coding Experts Group (VCEG); 15th Meeting: Pattaya, Thailand	12/3/2001-12/7/2001	Hideaki Kimata
Proposal of GMVC syntax (VCEG-O28r1)	ITU - Telecommunications Standardization Sector; Study Group 16 Question 6; Video Coding Experts Group (VCEG); 15th Meeting: Pattaya, Thailand	12/3/2001-12/7/2001	Hideaki Kimata
Skip Mode Motion Compensation (JVT-C027)	Joint Video Team (JVT) of ISO/IEC MPEG & ITU-T VCEG (ISO/IEC JTC1/SC29/WG11 and ITU-T SG16 Q.6); 3rd Meeting: Fairfax, Virginia, USA	5/6/2002-5/10/2002	Jani Lainema
Efficient MPEG-2 Encoding of Interlaced Video	Can. J. Elect. & Comp. Eng., Vol. 23, Nos. 1-2	1998	Yuen-Wen Lee
JVT (of ISO/IEC MPEG and ITU-T VCEG) 1st Meeting and VCEG (ITU-T SG16 Q.6) 15th Meeting Reports (JVT-B002d2)	Joint Video Team (JVT) of ISO/IEC MPEG & ITU-T VCEG (ISO/IEC JTC1/SC29/WG11 and ITU-T SG16 Q.6) 2nd Meeting: Geneva, CH	12/2001	Gary Sullivan
Meeting Report of the 14th VCEG Meeting (VCEG-N-88 draft 1)	ITU - Telecommunications Standardization Sector STUDY GROUP 16 Question 6 Video Coding Experts Group (VCEG); 14th Meeting: Santa Barbara, CA	9/24/2001-9/27/2001	Gary Sullivan
Adaptive Motion-Vector Resampling for Compressed Video Downscaling	IEEE Transaction on Circuits and Systems for Video Technology, Vol. 9, No. 6.	9/1999	Bo Shen
JVT (of ISO/IEC MPEG and ITU-T Q.6/16 VCEG) 2nd Meeting Report (JVT-B001 draft 1)	Joint Video Team (JVT) of ISO/IEC MPEG & ITU-T VCEG (ISO/IEC JTC1/SC29/WG11 and ITU-T SG16 Q.6) 2nd Meeting: Geneva, CH	1/29/2001-2/1/2001	Gary Sullivan

Nokia Exhibit 2014, p. 14
Snap/Hisense v. Nokia
IPR2025-01440

Title	Publication	Date	Name of First Author
JVT (of ISO/IEC MPEG and ITU-T Q.6/16 VCEG) 2nd Meeting Report (JVT-B001 draft 2)	Joint Video Team (JVT) of ISO/IEC MPEG & ITU-T VCEG (ISO/IEC JTC1/SC29/WG11 and ITU-T SG16 Q.6) 2nd Meeting: Geneva, CH	1/29/2001-2/1/2001	Gary Sullivan
JVT (of ISO/IEC MPEG and ITU-T Q.6/16 VCEG) 2nd Meeting Report (JVT-B001 draft 3)	Joint Video Team (JVT) of ISO/IEC MPEG & ITU-T VCEG (ISO/IEC JTC1/SC29/WG11 and ITU-T SG16 Q.6) 2nd Meeting: Geneva, CH	1/29/2001-2/1/2001	Gary Sullivan
JVT (of ISO/IEC MPEG and ITU-T Q.6/16 VCEG) 2nd Meeting Report (JVT-B001 draft 4)	Joint Video Team (JVT) of ISO/IEC MPEG & ITU-T VCEG (ISO/IEC JTC1/SC29/WG11 and ITU-T SG16 Q.6) 2nd Meeting: Geneva, CH	1/29/2001-2/1/2001	Gary Sullivan
JVT (of ISO/IEC MPEG and ITU-T Q.6/16 VCEG) 2nd Meeting Report (JVT-B001 draft 5)	Joint Video Team (JVT) of ISO/IEC MPEG & ITU-T VCEG (ISO/IEC JTC1/SC29/WG11 and ITU-T SG16 Q.6) 2nd Meeting: Geneva, CH	1/29/2001-2/1/2001	Gary Sullivan
Core Experiment Description: Motion Vector Coding with Global Motion Parameters (VCEG-N77)	ITU - Telecommunications Standardization Sector STUDY GROUP 16 Question 6 Video Coding Experts Group (VCEG); 14th Meeting: Santa Barbara, CA	9/24/2001-9/28/2001	Shijun Sun
Core Experiment Description: Motion Vector Coding with Global Motion Parameters (VCEG-N77r1)	ITU - Telecommunications Standardization Sector STUDY GROUP 16 Question 6 Video Coding Experts Group (VCEG); 14th Meeting: Santa Barbara, CA	9/24/2001-9/28/2001	Shijun Sun
Global Motion Vector Coding (GMVC) (VCEG-O20)	ITU - Telecommunications Standardization Sector STUDY GROUP 16 Question 6 Video Coding Experts Group (VCEG); 15th Meeting: Pattaya, Thailand	12/4/2001-12/7/2001	Shijun Sun

Nokia Exhibit 2014, p. 15
Snap/Hisense v. Nokia
IPR2025-01440

Title	Publication	Date	Name of First Author
Global Motion Vector Coding (GMVC) (VCEG-O20r1)	ITU - Telecommunications Standardization Sector STUDY GROUP 16 Question 6 Video Coding Experts Group (VCEG); 15th Meeting: Pattaya, Thailand	12/4/2001-12/7/2001	Shijun Sun
Global Motion Vector Coding (GMVC) (VCEG-O20r2)	ITU - Telecommunications Standardization Sector STUDY GROUP 16 Question 6 Video Coding Experts Group (VCEG); 15th Meeting: Pattaya, Thailand	12/4/2001-12/7/2001	Shijun Sun
Global Motion Vector Coding (GMVC) (JVT-B019)	Joint Video Team (JVT) of ISO/IEC MPEG & ITU-T VCEG (ISO/IEC JTC1/SC29/WG11 and ITU-T SG16 Q.6) 2nd Meeting: Geneva, CH	1/29/2001-2/1/2001	Shijun Sun
GMVC: Core Experiment Report (VCEG-O21)	ITU - Telecommunications Standardization Sector STUDY GROUP 16 Question 6 Video Coding Experts Group (VCEG); 15th Meeting: Pattaya, Thailand	12/04/2001-12/07/2001	Shijun Sun
Motion Vector Coding with Global Motion Parameters (VCEG-N16)	ITU - Telecommunications Standardization Sector STUDY GROUP 16 Question 6 Video Coding Experts Group (VCEG); 14th Meeting: Santa Barbara, CA, USA	9/24/2001-9/28/2001	Shijun Sun
Additional "Zero-motion" Sub-block Mode for "Motion Copy (JVT-C022)	Joint Video Team (JVT) of ISO/IEC MPEG & ITU-T VCEG (ISO/IEC JTC1/SC29/WG11 and ITU-T SG16 Q.6) 3rd Meeting: Fairfax, Virginia, USA	5/6/2002-5/10/2002	Shijun Sun
Fast Motion Estimation using Circular Zonal Search	Proceedings of SPIE - The International Society for Optical Engineering	6/2000	Alexis Tourapis
Joint Model Number 1 (JM-1) (JVT-A003)	Joint Video Team (JVT) of ISO/IEC MPEG and ITU-T VCEG; Pattaya, Thailand	12/03/2001-12/07/2001	Thomas Weigand

Nokia Exhibit 2014, p. 16
Snap/Hisense v. Nokia
IPR2025-01440

Title	Publication	Date	Name of First Author
Joint Model Number 1, Revision 1(JM-1r1) (JVT-A003r1)	Joint Video Team (JVT) of ISO/IEC MPEG and ITU-T VCEG; Pattaya, Thailand	12/3/2001-12/7/2001	Thomas Weigand
Rate-Constrained Coder Control and Comparison of Video Coding Standards	IEEE Transactions on Circuits and systems for Video Technology	7/2003	Thomas Weigand
Study of Final Committee Draft of Joint Video Specification (ITU-T Rec. H.264 | ISO/IEC 14496-10 AVC) (JVT-F100)	Joint Video Team (JVT) of ISO/IEC MPEG & ITU-T VCEG (ISO/IEC JTC1/SC29/WG11 and ITU-T SG16 Q.6) 6th Meeting: Awaji, Island, JP	12/5/2002-12/13/2002	Thomas Weigand
Editor's Proposed Changes Relative to JVT-E146d37ncm, revision 4 (JVT-F100d1)	Joint Video Team (JVT) of ISO/IEC MPEG & ITU-T VCEG (ISO/IEC JTC1/SC29/WG11 and ITU-T SG16 Q.6) 6th Meeting: Awaji, Island, JP	12/5/2002-12/13/2002	Thomas Weigand
Study of Final Committee Draft of Joint Video Specification (ITU-T Rec. H.264 | ISO/IEC 14496-10 AVC), Draft 2 (JVT-F100d2)	Joint Video Team (JVT) of ISO/IEC MPEG & ITU-T VCEG (ISO/IEC JTC1/SC29/WG11 and ITU-T SG16 Q.6) 6th Meeting: Awaji, Island, JP	12/5/2002-12/13/2002	Thomas Weigand
Core Experiment Report on Global Motion Vector Coding (VCEG-O33)	ITU - Telecommunications Standardization Sector STUDY GROUP 16 Question 6 Video Coding Experts Group (VCEG); 15th Meeting: Pattaya, Thailand	12/4/2001-12/6/2001	Mathias Wien
Core Experiment Report on Global Motion Vector Coding (VCEG-O33r1)	ITU - Telecommunications Standardization Sector STUDY GROUP 16 Question 6 Video Coding Experts Group (VCEG); 15th Meeting: Pattaya, Thailand	12/4/2001-12/6/2001	Mathias Wien
Prediction and Search Techniques for RD-Optimized Motion Estimation in a Very Low Bit Rate Video Coding Framework	1997 IEEE International Conference on Acoustics, Speech, and Signal Processing	04/21/1997-04/24/1997	Yuen-Wen Lee

Nokia Exhibit 2014, p. 17
Snap/Hisense v. Nokia
IPR2025-01440

Title	Publication	Date	Name of First Author
Very Low Rate DCT-Based Video Coding Using Dynamic VQ	Proceedings of 3rd IEEE International Conference on Image Processing	9/19/1996	Yuen-Wen Lee
Predictive Block-Matching Motion Estimation for TV Coding –Part 1: inter-Block Prediction	IEEE Transactions on Broadcasting	9/1991	Sohail Zafar
Predictive RD Optimized Motion for Estimation for Very Low Bit Rate Video Coding (1997)	IEEE Journal on Selected Areas in Communications (Vol. 15, Issue 9)	12/1997	Faouzi Kossentini
An Efficient Computation-Constrained Block-Based Motion Estimation Algorithm for Low Bit Rate Video Coding	8 IEEE Trans. On Image Processing 1816	12/1999	Gallant
Digital Video: An Introduction to MPEG-2	Springer	12/1996	Barry G. Haskell
Efficient Motion Estimation Using Spatial and Temporal Motion Vector Prediction"	1 Proc. From Int'l. Conf. on Image Processing 70	10/1999	I. Ismaeil
Rate-Computation Optimized Block Based Video Coding	PhD Dissertation, University of British Columbia	4/1998	YW Lee
Meeting Report of the 13th VCEG Meeting (Document: VCEG-M00r0)	ITU-T Q.6/16 Video Coding Experts Group (VCEG) 13th Meeting, Austin, Texas, USA, April 2-4, 2001	4/2/2001-4/4/2001	Gary Sullivan
Meeting Report of the 12th ITU-T VCEG (Q.6/16) Meeting (Document: VCEG-M01)	Meeting Report of the Twelfth Meeting (Meeting L) of the ITU-T Video Coding Experts Group (VCEG) [Q.6/16] – Eibsee, Germany, 9-12 January, 2001	1/9/2001-1/12/2001	Gary Sullivan
Meeting Report of the 5th JVT and VCEG Meeting (Document: JVT-E096)	Joint Video Team (JVT) of ISO/IEC MPEG & ITU-T VCEG (ISO/IEC JTC1/SC29/WG11 and ITU-T SG16 Q.6) 5th Meeting: Gevena, Switzerland, 9-17, October, 2002	10/9/2002-10/17/2002	Simon Booth

Nokia Exhibit 2014, p. 18
Snap/Hisense v. Nokia
IPR2025-01440

Title	Publication	Date	Name of First Author
Description of Ref. Model 8 (RM8)	Joint Photography Expert Group Conference, Crowborough JPEG Forum Ltd, GB	6/9/1989	Specialists Group on Coding for Visual Telephony Joint Photographic Expert Group
Annex U with long-term pictures (AnnU_LTP.doc)	ITU – Telecommunications Standardization Sector; STUDY GROUP 16; Video Coding Experts Group (Question 15); Eleventh Meeting: Osaka, Japan	6/29/2000	Qunshan Gu
Annex U with long-term pictures – a more conservative approach (AnnU_LTPr2.doc)	ITU – Telecommunications Standardization Sector; STUDY GROUP 16; Video Coding Experts Group (Question 15); Post-Osaka Contribution for White Document Preparation	7/10/2000	Gary Sullivan
H.263++ Annex U Draft (AnnU_LTPr3.doc)	ITU – Telecommunications Standardization Sector; STUDY GROUP 16; Video Coding Experts Group (Question 15); Post-Osaka Contribution for White Document Preparation	7/12/2000	Gary Sullivan
H.263++ Annex U Draft (AnnU_LTPr4.doc)	ITU – Telecommunications Standardization Sector; STUDY GROUP 16; Video Coding Experts Group (Question 15); Post-Osaka Contribution for White Document Preparation	7/17/2000	Gary Sullivan
H.263++ Annex U Draft (AnnU_LTPr5.doc)	ITU – Telecommunications Standardization Sector; STUDY GROUP 16; Video Coding Experts Group (Question 15); Post-Osaka Contribution for White Document Preparation	7/19/2000	Gary Sullivan
H.263++ Annex U Draft (AnnU_LTPr6.doc)	ITU – Telecommunications Standardization Sector; STUDY GROUP 16; Video Coding Experts Group (Question 15); Post-Osaka	7/20/2000	Gary Sullivan

Nokia Exhibit 2014, p. 19
Snap/Hisense v. Nokia
IPR2025-01440

Title	Publication	Date	Name of First Author
	Contribution for White Document Preparation		
H.263++ Annex U Draft (AnnU_LTPr7.doc)	ITU – Telecommunications Standardization Sector; STUDY GROUP 16; Video Coding Experts Group (Question 15); Post-Osaka Contribution for White Document Preparation	7/21/2000	Gary Sullivan
H.263++ Annex U Draft (AnnU_LTPr8.doc)	ITU – Telecommunications Standardization Sector; STUDY GROUP 16; Video Coding Experts Group (Question 15); Post-Osaka Contribution for White Document Preparation	7/22/2000	Gary Sullivan
H.263++ Annex U Draft (AnnU_LTPr9.doc)	ITU – Telecommunications Standardization Sector; STUDY GROUP 16; Video Coding Experts Group (Question 15); Post-Osaka Contribution for White Document Preparation	7/22/2000	Gary Sullivan
Post-Osaka Draft of Annex W in preparation for White Document submission (AnnW_PostOsaka_r0.doc)		7/13/2000	Gary Sullivan
Post-Osaka Draft of Annex W in preparation for White Document submission (AnnW_PostOsaka_r1.doc)		7/22/2000	Gary Sullivan
Draft for "H.263++" Annexes U, V, and W to Recommendation H.263 Rev. 1		11/2000	ITU-T
Draft for "H.263++" Annexes U, V, and W to Recommendation H.263 Rev. 2		11/2000	IT-T
Draft for "H.263++" Annexes U, V, and W to Recommendation H.263		11/2000	ITU-T

Nokia Exhibit 2014, p. 20
Snap/Hisense v. Nokia
IPR2025-01440

3. Prior Art Items and/or Knowledge

Respondents contend that the asserted claims are invalid under 35 U.S.C. §§ 102 and/or 103 based on prior art items embodying and alleged inventions or structures described in, and/or any knowledge disclosed by or referred to in, any of the prior art patents or prior art publications identified above in Sections IV.A.1 and IV.A.2. Because Respondents have not yet completed discovery in this case, Respondents reserve the right to supplement this disclosure with facts, documents, or other information learned at a later point through third-party discovery or other further investigation.

4. Prior Art Under 35 U.S.C. §§ 102(f) and 102(g)

Respondents contend that the asserted claims of the '808 patent are invalid under 35 U.S.C. § 102(f) because the inventor of the asserted patent claims did not invent the subject matter claimed therein. Specifically, because Nokia failed to identify at least one true inventor of the '808 patent, the '808 patent is invalid. The '808 patent is also unenforceable because Nokia engaged in inequitable conduct by misrepresenting or omitting material information with the specific intent to deceive the U.S. Patent and Trademark Office (USPTO).

Jani Lainema ("Lainema") (sole inventor listed on '808 patent), with Nokia co-author Marta Karczewicz ("Karczewicz"), submitted contribution JVT-C027 to the Joint Video Team (JVT) of ISO/IEC MPEG and ITU-T VCEG, for consideration at the JVT's third meeting from 6-10 May 2002.[1] In JVT-C027, Lainema and Karczewicz disclosed a modified skip mode, where "a zero motion vector is used in two cases: (1) [i]f a Macroblock immediately above or to the left is not available (that is, is out of the picture or belongs to a different slice)[;] (2) [i]f a Macroblock

[1] Available at https://www.itu.int/wftp3/av-arch/jvt-site/2002_05_Fairfax/, produced at RESPNOKIA_00002876 ("JVT-C027").

or block immediately above or to the left that is used in motion vector prediction has a zero motion vector and uses the latest picture as reference in motion compensation." JVT-C027, at 1.

Nokia filed its application for the '808 patent on March 14, 2003, listing Lainema as the sole inventor. *See* Complaint, Appendix A at NOKIA_CMPLITC00000538-553; Exhibit 2; *see also* RESPNOKIA_00009353. The '808 patent discloses a modified skip mode where "the 'non-active motion' category takes place if either or both of the two conditions below are true…: Condition 1: The macroblock immediately above or the macroblock immediately to the left of the macroblock under consideration is not available (that is, is out of the picture or belongs to a different slice). Condition 2: The macroblock or block immediately above, or the macroblock or block immediately to the left that are used in motion vector prediction for the 16x16 INTER mode has a Zero motion vector and uses the latest picture as reference in motion compensation." '808 patent, 20:13-20:25.

Under Pre-AIA 35 U.S.C. § 102(f), a person shall not be entitled to a patent if "he did not himself invent the subject matter sought to be patented." 35 U.S.C. § 102(f). 35 U.S.C. § 111 further requires that the patent application "be made, or authorized to be made, by the inventor." 35 U.S.C. § 111. Accordingly, "[a] patent is invalid if more or less than the true inventors are named." *Trovan, Ltd. v. Sokymat SA, Irori*, 299 F.3d 1292, 1301 (Fed. Cir. 2022).

"Determining 'inventorship' is nothing more than determining who conceived the subject matter at issue." *Sewall v. Walters*, 21 F.3d 411, 415 (Fed. Cir. 1994). "Conception is the touchstone of invention, and it requires a definite and permanent idea of an operative invention, including *every feature* of the subject matter sought to be patented." *In re VerHoef*, 888 F.3d 1362, 1366 (Fed. Cir. 2018) (internal citations omitted) (emphasis in original). "As to joint inventorship, a joint inventor must contribute to the invention's conception." *CODA Dev. S.R.O. v. Goodyear*

Tire & Rubber Co., 916 F.3d 1350, 1358 (Fed. Cir. 2019). However, the joint inventor "need not make the same type or amount of contribution to the invention nor contribute to every claim—a contribution to one claim is enough." *Id.*

Here, the '808 patent is invalid at least because Marta Karczewicz is a joint inventor of the purported invention identified in the '808 patent but is not a named inventor. According to Nokia, the JVT-C027 contribution submitted by Lainema and Karczewicz was adopted into the H.264 Standard and certain asserted claims of the '808 patent are essential to the H.264 Standard. As such, Karczewicz is a joint inventor of the '808 patent because she contributed to the invention's conception, specifically, the modified skip mode described in JTV-C027 at the very least. *See CODA*, 916 F.3d at 1358. Accordingly, the '808 patent is invalid because "less than the true inventors are named." *Trovan*, 299 F.3d at 1301.

To the extent discovery reveals that Nokia, Lainema, or any related subsidiaries or entities affiliated with Nokia or Lainema improperly derived the alleged invention or any part of the alleged invention pursuant to pre-AIA U.S.C. § 102(f) from another person or entity, Respondents reserve the right to amend their invalidity contentions with the name(s) of the person(s) or entities from whom, and the circumstances under which, the alleged inventions or any part(s) of the alleged inventions were derived. Improper derivation requires: (1) prior conception by another, and (2) communication of that conception to a named inventor. *Gambro Lundia AB v. Baxter Healthcare Corp.*, 110 F.3d 1573, 1576 (Fed. Cir. 1997). For example, at the 2nd JVT Meeting in Geneva, CH, a "comment was made with regard to *skipping at the MV predictor*" (JVT- B001d1, p. 9 (emphasis in original) (NOK_AMHP_ITC00012725)), which Lainema admits is the "kind of capabilities" that the '808 patent can provide. Lainema, 307:23-308:10. Based on this public comment—months before the '808 provisional application was filed—an ad hoc group was formed to study "the use

of MB skip at prediction." JVT- B001d1, p. 9 (NOK_AMHP_ITC00012725). Respondents intend to seek discovery on the conception and development of "skipping at the MV predictor" and "MB skip at predictor" (*see* JVT-B001d1 (NOK_AMHP_ITC00008010)), "Motion Copy (Mcopy)" (*see* JVT-C011 (NOK_AMHP_ITC00012725)), as well as any communications and participation of the named inventor and/or the above-referenced affiliated entities in relevant standard setting bodies such as the Joint Video Team (JVT) of ISO/IEC MPEG and ITU-T VCEG.

The '808 patent is also unenforceable because Nokia engaged in inequitable conduct by misrepresenting or omitting material information with the specific intent to deceive the U.S. Patent and Trademark Office (USPTO).

"Inequitable conduct is a defense to patent infringement that, if proven, renders the asserted patent unenforceable." *Belcher Pharm., LLC v. Hospira, Inc.*, 11 F.4th 1345, 1352. "To prevail on an inequitable conduct defense, a defendant must establish both the materiality of the withheld reference and the applicant's intent to deceive the [Patent and Trademark Office ("PTO")]." *Id.* "[T]he materiality required to establish inequitable conduct is but-for materiality," such that the PTO would not have allowed a claim had it been aware of the undisclosed information. *Therasense, Inc. v. Becton, Dickinson and Co.*, 649 F.3d 1276, 1291 (Fed. Cir. 2011). "[A]n examiner must attend to the question of inventorship, pursuant to 35 U.S.C. § 102(f)," which dictates a person shall not be entitled to a patent if "he did not himself invent the subject matter sought to be patented." *PerSeptive Biosystems, Inc. v. Pharmacia Biotech, Inc.*, 225 F.3d 1315, 1322 (Fed. Cir. 2000); 35 U.S.C. § 102(f). Furthermore, under 35 U.S.C. § 111, a patent application is required to "be made, or authorized to be made, by the inventor." 35 U.S.C. § 111. Therefore, "[a]s a critical requirement for obtaining a patent, inventorship is material." *PerSeptive*, 225 F.3d at 1321. Where the applicant's "falsehoods, misrepresentations and omissions were all directed

towards a central issue—whether the named inventors were the sole inventors," "the behavior of the applicants constituted inequitable conduct." *Id.* at 1322-23 (affirming the district court's holding that the patents are unenforceable).

On March 14, 2003, Nokia filed its application for the '808 patent disclosing only Lainema as the inventor, despite Karczewicz having been a joint inventor of the '808 patent as discussed above. *See* NOK_AMHP_ITC00039885. The '808 patent's inventorship is a but-for material information because PTO would not have allowed the patent had it been aware that Karczewicz was an omitted true inventor. *See* 35 U.S.C. §§ 102(f), 111. Furthermore, Nokia intended to deceive the PTO at the least because Karczewicz was a Nokia employee, and Nokia knew about the JVT-C027 submission. By falsely stating that Lainema is the sole inventor, misrepresenting Lainema as the sole inventor, and omitting Karczewicz as a joint inventor during the prosecution of the '808 patent, Nokia's "falsehoods, misrepresentations and omissions were all directed towards a central issue—whether the named inventors were the sole inventors" and constitutes inequitable conduct that invalidates the '808 patent. *PerSeptive*, 225 F.3d at 1322.

Nokia also deliberately failed to disclose information about third parties' conception of skip mode motion compensation that it knew was highly material. The '808 patent is directed to skip mode motion compensation, also referred to as "skipping at the MV predictor" or "MB skip at predictor." The '808 patent only issued, however, after Nokia misrepresented that Lainema invented skipping at the MV predictor, while concealing the fact that, in truth, skipping at the MV predictor was conceived of by a third party, whom Lainema does not recall, and disclosed at the 2nd JVT Meeting in Geneva, CH. JVT-B001d1, p. 9 (NOK_AMHP_ITC00012725); Lainema, 307:23-308:10. Despite knowing that this would create a bar to patentability, Nokia nevertheless made the affirmative decision to withhold this information, including e.g., JVT- B001d1, from the

United States Patent and Trademark Office. The conception of skipping at the MV predictor is material to the patentability of the ’808 patent. For at least these reasons, the ’808 patent is unenforceable under the doctrine of inequitable conduct.

Because Respondents have not yet completed discovery in this case, including but not limited to taking depositions of the named inventors of the asserted patents, reviewing Nokia’s productions, and seeking discovery of prior inventions by third parties, Respondents reserve the right to supplement this disclosure with facts, documents, or other information learned at a later point through discovery or other further investigation.

B. Anticipation and Obviousness

Respondents contend that the prior art references identified in Respondents’ contentions anticipate or render obvious the asserted claims of the ’808 patent. Respondents attach Exhibits A-1 to A-9 and A-11, which provide exemplary disclosures showing how the prior art anticipates and/or renders obvious the asserted claims of the ’808 patent.

Prior art that anticipate and/or render obvious the asserted claims of the ’808 patent are cited and described in the claim charts attached hereto as Exhibits A-1 to A-9 and A-11, each of which describe anticipation and/or obviousness of one or more claims of the ’808 patent by prior art references. These claim charts provide citations to portions of the above references, illustrating how the prior art explicitly discloses every element of the asserted claims of the ’808 patent. To the extent any element is not provided by an expressly enabling disclosure by the referenced prior art, all elements of the asserted claims of the ’808 patent would still be the inherent result of putting into practice the systems and methods described by the prior art referenced herein, as set forth below.

Nokia Exhibit 2014, p. 26
Snap/Hisense v. Nokia
IPR2025-01440

Exhibit	Primary Reference
A-1	U.S. Patent Appl. Publication No. 2003/0123738 ("Frojdh") (RESPNOKIA_00005766), Provisional Application No. 60/334,979 (RESPNOKIA_00004158), in view of U.S. Patent No. 5,781,249 ("Hwang") (RESPNOKIA_00006303) and Applicant Admitted Prior Art ("AAPA")
A-2	WO 01/11891 ("Karczewicz") (RESPNOKIA_00000885)
A-3	U.S. Patent No. 7,215,710 ("Yamada") (RESPNOKIA_00001371)
A-4	U.S. Patent No. 7,200,275 ("Srinivasan") (RESPNOKIA_00009320), Provisional Application No. 60/341,674 (RESPNOKIA_00009429)
A-5	U.S. Patent No. 6,785,331 ("Jozawa") (RESPNOKIA_00001323)
A-6	U.S. Patent No. 7,050,500 ("Sun") (RESPNOKIA_00007168)
A-7	U.S. Patent No. 6,931,070 ("Moore") (RESPNOKIA_00007017)
A-8	Sun, Shijun, et al.; Core Experiment Description: Motion Vector Coding with Global Motion Parameters; ITU - Telecommunications Standardization Sector; Study Group 16 Question 6; Video Coding Experts Group (VCEG); 14th Meeting: Santa Barbara, CA, USA, 24-28 September, 2001; Document: VCEG-N77 ("VCEG-N77") (RESPNOKIA_00007269); *see also* VCEG-N77r1 (RESPNOKIA_00007276)
A-9	ISO/IEC 11172-2:1993, Information technology — Coding of moving pictures and associated audio for digital storage media at up to about 1,5 Mbit/s — Part 2: Video ("MPEG-1") (RESPNOKIA_00000079)
A-11	ITU-T Recommendation H.263: Video coding for low bit rate communication ("H.263+") (RESPNOKIA_00390300)

In addition to the discussion above, and to the extent not anticipated, the asserted claims of the '808 patent are invalid under 35 U.S.C. § 103 as being obvious to a person having ordinary skill in the art of the relevant technology. Items of prior art that render obvious the asserted claims of the '808 patent are cited and described in the claim charts attached hereto as Exhibits A-1 to A-11. Respondents identify secondary references and obviousness combinations in Exhibit A-10. In the event a particular reference or combination of references identified in Exhibits A-1 to A-9, and A-11 does not anticipate or render obvious one of the asserted claims of the '808 patent, the

reference, alone or in combination with one or more of the references identified in those exhibits or in Exhibit A-10 renders the claim obvious. The identification of certain combinations of prior art does not exclude other combinations and is without prejudice to Respondents' right to rely on additional specific combinations as well as to detail and explain such combinations.

The U.S. Supreme Court in *KSR Int'l Co. v. Teleflex Inc.*, 127 S. Ct. 1727 (2007) emphasized that inventions arising from ordinary innovation, ordinary skill, or common sense should not be patentable. *Id*. at 1732, 1738, 1742-1743, 1746. A patent claim may be obvious if the combination of elements was obvious to try or if there existed at the time of the invention a known problem for which there was an obvious solution encompassed by the patent's claims. When a work is available in one field of endeavor, design incentives and other market forces can prompt variations of it, either in the same field or a different one. If a person of ordinary skill can implement a predictable variation, Section 103 likely bars its patentability. *Id*. at 1740. The Court stated that courts should "look to interrelated teachings of multiple patents; the effects of demands known to the design community or present in the marketplace; and the background knowledge possessed by a person having ordinary skill in the art, all in order to determine whether there was an apparent reason to combine the known elements in the fashion claimed by the patent at issue." *Id*. at 1740-41. *KSR* does not mandate evidence of a motivation or suggestion to combine prior art references. *See TGIP, Inc. v. AT&T Corp.*, 527 F. Supp. 2d 561, 580-81 (E.D. Tex. 2007). "[A] court can take account of the inferences and creative steps that a person of ordinary skill in the art would employ" to resolve the question of obviousness. *KSR*, 127 S. Ct. at 1741.

Based on all of these considerations, as further detailed in Exhibits A-1 to A-11, persons of ordinary skill in the art would have combined the teachings of the prior art references discussed and charted in those exhibits. The combinations of these references would have rendered obvious

Nokia Exhibit 2014, p. 28
Snap/Hisense v. Nokia
IPR2025-01440

to one of ordinary skill in the art the subject matter of the asserted claims of the ’808 patent. The references identified in Exhibits A-1 to A-11 are analogous prior art to the subject matter of the asserted claims of the ’808 patent and, for at least the reasons set forth below, are properly combinable. Because these prior art references exist within a single field of art, particularly one in which individuals in the field often shared and/or collaborated on their work, it would have been obvious for a person of skill in the art to look from one piece of prior art to another in order to find any missing functionality they desired to implement. Therefore, these references provide interrelated teachings and one of ordinary skill would look to the concepts in any of these references when seeking to solve the problems purportedly addressed by the asserted patents.

Numerous prior art references, including those identified in the attached exhibits, reflect common knowledge and the state of the prior art before the earliest claimed effective filing date of the asserted patents. Additionally, the named inventor, Lainema, admitted that the prior art included: skip coding modes (Lainema, 272:22-25); motion vector predictors (Lainema, 277:15-22, 322:9-15); median motion vectors (Lainema, 277:23-278:1). Lainema also admitted that JM1’s Inter 16 mode had the same functionality disclosed in the ’808 patent. According to Lainema, “both [functionalities] generate motion vectors, but with different numbers of bits,” thus “you could come up with the same motion vector in multiple ways.” (Lainema, 296:10-25)

As it would be unduly burdensome to create detailed claim charts for all of the invalidating combinations, for at least the reasons described in these final invalidity contentions, it would have been obvious to one of ordinary skill in the art to combine any of a number of prior art references, including any combination of those identified in the attached exhibits, to meet the limitations of the asserted claims of the ’808 patent. Respondents’ inclusion of exemplary combinations, in view

Nokia Exhibit 2014, p. 29
Snap/Hisense v. Nokia
IPR2025-01440

of the factors and exemplary motivations to combine identified herein, does not preclude Respondents from identifying other invalidating combinations and/or motivations as appropriate.

No showing of a specific motivation to combine prior art is required to combine the references disclosed above and in the attached charts, because each combination of art would have no unexpected results, and at most would simply represent a known alternative to one of ordinary skill in the art. *See KSR*, 127 S. Ct. at 1739-40 (rejecting the Federal Circuit's "rigid" application of the teaching, suggestion, or motivation to combine test, instead espousing an "expansive and flexible" approach). Indeed, the Supreme Court held that a person of ordinary skill in the art is "a person of ordinary creativity, not an automaton" and "in many cases a person of ordinary skill in the art will be able to fit the teachings of multiple patents together like pieces of a puzzle." *Id*. at 1742. Nevertheless, in addition to the information contained herein, Respondents hereby identify additional motivations and reasons to combine the cited art.

Clear and logical rationale to combine any of the references identified above with others exists from the prior art references themselves, as well as from the interrelated teachings of other prior art references, common knowledge, common sense, predictability, expectations, industry trends, design incentives or need, market demand or pressure, market forces, obviousness to try, the existence and nature of a known need or problem, and/or knowledge possessed by a person of ordinary skill. In addition, it would have been obvious to combine the prior art references identified above because there were only a finite number of predictable solutions and/or because known work in one field of endeavor prompts variations based on predictable design incentives and/or market forces either in the same field or a different one. In addition, the combinations of the prior art references identified above would have been obvious because the combinations represent the known potential options with a reasonable expectation of success. Therefore, various reasons to

combine the disclosed references exist. Respondents reserve the right to rely on the knowledge of those skilled in the art, the testimony of expert witnesses, and/or other prior art, to show that it would have been obvious to include the allegedly missing limitation and to explain the motivation to combine the prior art elements.

In addition, it would have obvious to combine any of the prior art in Exhibits A-1 to A-11 because all of these references relate to devices and methods for motion-compensated video encoding. For example, each of the primary references disclose a modified skip mode that infers motion based on surrounding blocks, in order to minimize the number of bits sent to represent a block's motion. Additionally, the field is a well-developed field, in which designers and engineers often borrow ideas from existing standards and technical proposals and incorporate them into a video codec framework that was common years before the '808 patent. *See, e.g.*, Frojdh Provisional at § 4 ("A typical video coder, such as ITU-T Recommendations H.261 and H.263, MPEG-1 part 2, MPEG-2 part 2 (H.262), or MPEG-4 part 2, operates by sequentially code a video sequence frame by frame.").

1. Frojdh in view of Hwang and AAPA

Frojdh discloses the use of motion prediction in digital video compression. Frojdh, [0002]. In particular, Frojdh discloses a method that "employs global motion compensation" "wherein macroblocks are grouped into slices and global motion compensation information is transmitted with encoded slices." Frojdh, [0002]. Frojdh discloses that when making motion compensation determinations, parts of a frame that contain little or no change can be "skipped or non-coded, in order to maximize compression efficiency." *Id*., [0004], [0047] ("Furthermore, there is one COPY mode, which uses no MV and no coefficients. This is the cheapest mode to signal. In fact, run-length coding is used to signal a number of copied (skipped) macroblocks with one codeword."). Frojdh also discloses an "implicit global motion compensation (IGMC) mode, which is used to

copy pixels from a previous frame displaced by a predicted motion vector." Frojdh, at Abstract, [0055] ("In an embodiment referred to as Implicit global motion compensation (IGMC) no explicit motion vector is sent with the encoded slice 40. Instead, the macroblock COPY (aka SKIP) mode is reinterpreted as an Inter macroblock mode without coefficients or explicitly coded motion vectors."). Integrating the modified skip mode with standard video codec techniques and structures such as those disclosed in the applicant admitted prior art of the '808 patent, which we further discuss below, would have offered an obvious improvement in video compression efficiency and could have been easily implemented by a person of ordinary skill in the art.

Frojdh further discloses decoding the motion compensation information generated by the encoding process. Frojdh discloses how "[b]y using an already decoded frame (reconstructed frame) as reference," the results of motion compensation (e.g., motion vectors) can "inform [a] decoder how to spatially translate the corresponding regions of [a]the reference frame in order to make a prediction for [a] macroblock under consideration." Frojdh, [0011]. Frojdh further describes encoding a portion of a frame (e.g., a slice) with motion compensation information, and using the motion compensation information to "reconstruct" the corresponding original portion of the frame. Frojdh. [0024]. That is, Frojdh describes how the motion compensation information generated by its encoding process is used to reconstruct original frame data. To reconstruct a video sequence from the result of its encoding method, Frojdh's decoding method therefore performs decoding steps corresponding to those of the encoding method. For example, a POSITA would have understood that decoding therefore includes receipt of the indication of the skip coding mode (i.e., the IGMC mode).

A POSITA would have understood and found it obvious based on Frojdh's teachings that when "the macroblock COPY (aka SKIP) mode is reinterpreted as an" IGMC mode macroblock,

there is a benefit to IGMC mode providing the COPY mode functionality to retain the ability to indicate the zero motion vector (e.g., without utilizing an express motion vector) because COPY mode "is the cheapest mode to signal" since it "uses no MV and no coefficients," Frojdh, [0047], [0055]. A POSITA would recognize the need to continue to be able to utilize a zero-motion vector for certain macroblocks, as well as the benefit to retaining the ability to indicate the zero-motion vector cheaply (e.g., without utilizing an express motion vector). In the alternative, a POSITA would have understood and found it obvious that Frojdh's global motion compensation (GMC) mode, comprised of both the IGMC mode and COPY (aka SKIP) mode teaches or suggests the recited "skip coding mode," since it discloses that "a bitstream representing a coded image block can include a syntactic element which may be interpreted to indicate either the IGMC mode or the COPY mode." Frojdh, [0056].

As a further example, a POSITA would have understood and found it obvious that Frojdh discloses different advantages of the zero motion vector and the predicted non-zero motion vector, *e.g.*, the zero motion vector is cheapest to signal, but the predicted non-zero motion vector may be more useful. Frojdh also teaches a motion vector predicted from neighboring blocks. A POSITA would have understood and found it obvious to use the motion information in a neighboring segment both to predict a motion vector, as well to assign the predicted motion vector or alternative motion vector (e.g., a zero motion vector) depending on which is associated with the "more useful MB mode" in a coding scenario.

For further example, a POSITA would have understood and found it obvious that when blocks of a frame "are coded sequentially row by row, starting at the top left corner and ending at the bottom right corner," they are coded in a raster-scan order, meaning that when a particular block or segment within a frame, other than the block at the top left corner of the frame, ("first

segment") is being encoded, at least one of the neighboring blocks in the current frame ("second segment") must precede it in the encoding order (e.g., an image block immediately to the left and/or top, per raster-scan order). Frojdh, [0009].

a) Motivation to Combine Frojdh and Hwang

Hwang discloses a method and apparatus for determining the motion vector of a block (referred to as a search block) based on the motion vectors of neighboring blocks for which their motion vectors have already been determined (referred to as processed blocks). Hwang, 1:6–10, 3:25-35. Figure 4 of Hwang shows "[t]he processed neighboring blocks whose motion vectors are utilized in detecting the motion vector of the search block B(I,j)…." 3:26–56.

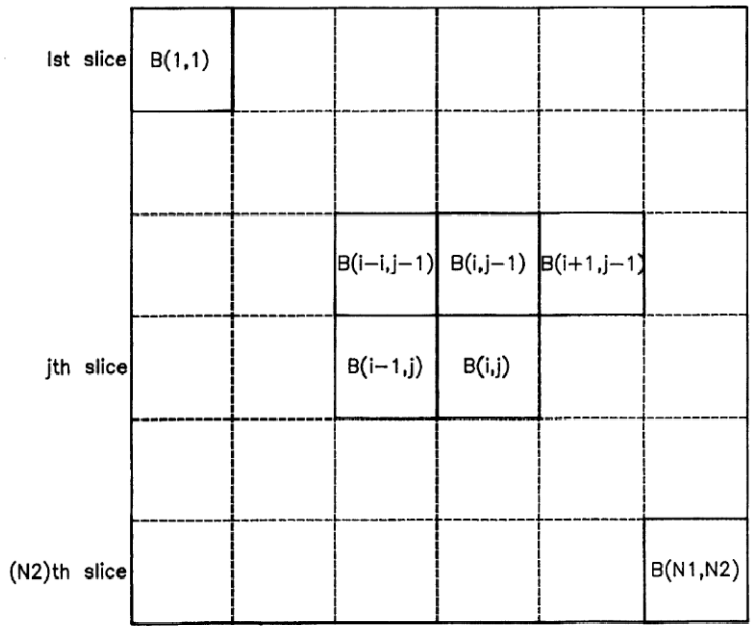

In particular, to determine the motion vector for "search block B(i,j)," the "motion vectors of 4 neighboring blocks, i.e., an upper left block B(i-1, j-1), an upper middle block B(i,j-1), an upper right block B(i+1,j-1), and a middle left block B(i-1,j), are known when the search block is processed," and "the motion vector of the search block is either selected among the motion vectors of the processed neighboring blocks or decided by using the full search block matching." Hwang,

Nokia Exhibit 2014, p. 34
Snap/Hisense v. Nokia
IPR2025-01440

3:36–57, 4:13–17. The motion vector of the search block may be selected from among the motion vectors of the processed neighboring blocks (referred to as candidate vectors), in lieu of full search block matching, when the distortion between the search block and a predicted block (corresponding to one of the candidate vectors) is less than a threshold. Hwang, 5:15-53. The candidate vectors may include an X-vector and Y-vector (each selected from among the motion vectors of the neighboring processed blocks) and a 0 vector. Hwang, 4:51-5:10, 3:30–32. Hwang thus teaches using calculated motion vectors of neighboring blocks, and a 0 vector, to determine the motion vector of a block being processed.

Like the '808 patent, Frojdh and Hwang are each in the same field of encoding and decoding of video signals. Both Frojdh and Hwang teach efficient methods of video compression using motion compensation. Frojdh, [0002]; Hwang, 1:14–29, 2:7-13, 3:65-4:12.

Frojdh discloses that in its described IGMC mode a block's motion vector is predicted based on neighboring blocks in the current frame, but does not disclose the implementation details of how neighboring blocks are used to form that prediction. Frojdh, [0023], [0055]. A POSITA would be motivated to look to other prior art for details on how to predict a current block's motion vector based on its neighboring blocks, and would have understood that the implementation details, as taught by Hwang, were a known solution, and further that Hwang complements Frojdh by teaching an improved method for determining the motion vector of a block based on its previously coded neighbors.

Hwang teaches how to use the motion vectors of neighboring blocks to determine the motion vector of a search (i.e., current) block. Hwang, Abstract, 2:42-44. Hwang explains that "a motion vector of a block may have a correlation with motion vectors of neighboring blocks, which can be utilized in reducing the computational burden required to determining [*sic*] the motion

vectors." Hwang, 2:31-34. For example, the motion vector for the search block may be selected from three "candidate vectors," which consist of an X-vector and Y-vector (both of which are selected from the motion vectors of neighboring blocks), and a 0 vector. Hwang, 4:51-59, 5:7-10. Hwang further discloses calculating the distortions between the search block and each of the three predicted blocks corresponding to the three candidate vectors, and selecting the candidate vector associated with the minimum distortion. Hwang, 5:15-21.

Combining Hwang's teaching of determining a block's motion vector based on candidate vectors derived from the motion vectors of processed neighboring blocks with Frojdh's IGMC mode provides an improved, computationally efficient, method for determining predicted motion vectors. In both references, this includes calculating motion vectors for parts of a frame based on the motion vectors of neighboring parts of the frame. Frojdh, [0055]; Hwang, 2:40–50. Both references also recognize that the calculated motion vector may be the zero vector. Frojdh, [0022]; Hwang, 2:51–57. Hwang further describes how its approach to calculating a motion vector for a block can avoid the need to perform a full search for the block, which can be computationally expensive. Hwang, 2:7-13, 3:65-4:12. In other words, the Frojdh-Hwang combination amounts to using a known technique (Hwang's motion vector determination based on candidate vectors) to improve a similar system (avoiding a full search in Frojdh's IGMC mode) in the same way (prediction based on the motion vectors of neighboring blocks).

A POSITA would reasonably have expected success incorporating Hwang's motion vector determination into Frojdh's IGMC mode because Hwang merely improves upon "[o]ne of the methods which have been used most frequently in estimating the displacement of an object in a video sequence." Hwang, 1:57-59.

b) Motivation to Combine Frojdh and AAPA

The ’808 patent background (AAPA) describes a generic video coding system with exemplary video encoder and decoder, illustrated below in Figures 1 and 2. ’808 Patent, 3:44-52. The video encoder includes a control manager, motion estimator, a motion field coder, a motion compensated predictor, and a video multiplex coder. ’808 Patent, 4:1-12, Figure 1. And the video decoder includes a control manager, video multiplex decoder, and motion compensated prediction block. ’808Patent, 8:19-26, Figure 2. Moreover, other video encoders and decoders resembling the exemplary video encoder and decoder of the ’808 patent background were well known before the earliest claimed priority date of the ’808 patent.

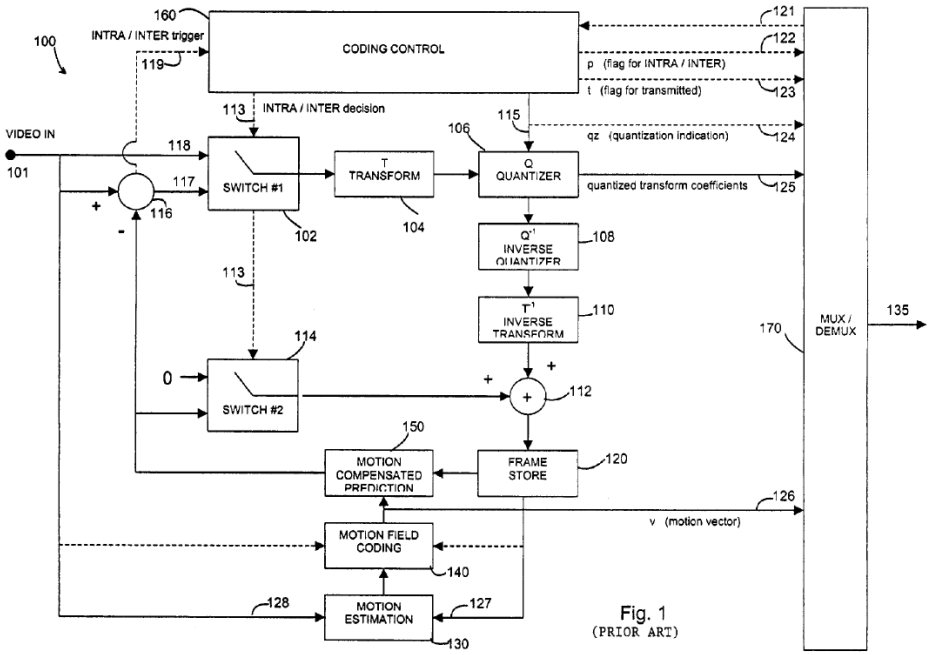

Fig. 1
(PRIOR ART)

Nokia Exhibit 2014, p. 37
Snap/Hisense v. Nokia
IPR2025-01440

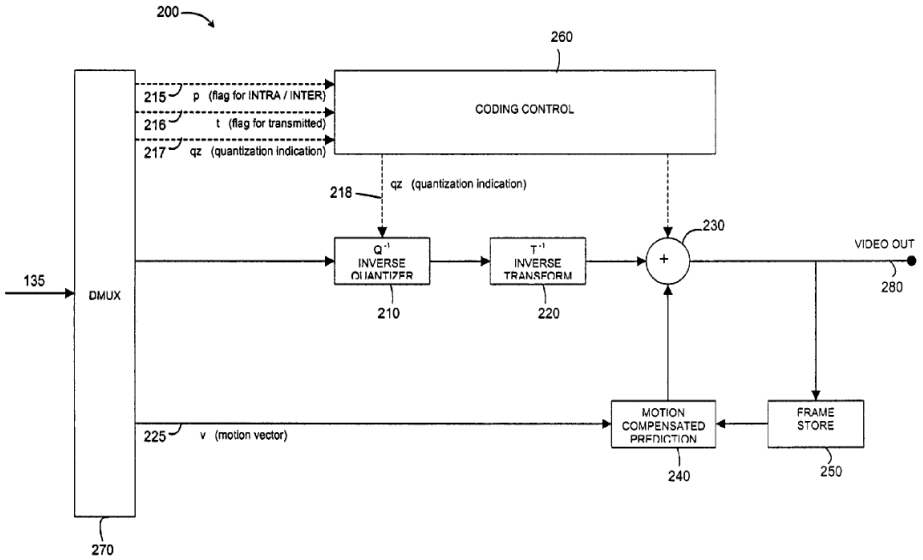

Fig. 2
(PRIOR ART)

Frojdh and the ’808 patent are each in the same field of encoding and decoding of video signals. Both Frojdh and the ’808 patent describe an encoder and decoder that use motion compensation. *See, e.g.*, Frojdh, [0002], [0011], [0056]; ’808 patent, Abstract, 1:9-11, 3:11-21.

As described above, Frojdh discloses a method for compression of video signal data, and describes both an encoder and decoder to predict video data. Frojdh, [0002], [0011], [0056]. That is, Frojdh discloses an encoder and decoder to compress and de-compress, respectively, video data. However, Frojdh does not disclose the implementation details of those encoder and decoder components. A POSITA would have been motivated to look to AAPA’s teachings for those implementation details, as both Frojdh and AAPA describe performing motion compensation for video. Frojdh, [0002]; ’808 Patent, 3:11-21.

A POSITA would have had a reasonable expectation of success in making the proposed combination because it merely amounts to using known techniques (AAPA’s exemplary video encoder and video decoder, and the components therein) to improve a similar system (Frojdh’s video coder and decoder, respectively) in the same way (to perform motion compensation of video using intra-frame and inter-frame). This combination also merely amounts to combining well-

known prior art elements (AAPA's video encoder with coding control, motion compensated prediction, and multiplexer, and AAPA's video decoder with coding control, motion compensated prediction, and demultiplexer) according to known methods (as evidenced AAPA, which shows that a POSITA would have known how to use the disclosed video encoder and video decoder components in a similar video coding system).

c) Motivation to Combine Frojdh, AAPA, and Hwang

A POSITA would have been motivated to combine Hwang's teaching of determining a block's motion vector, based on candidate vectors derived from the motion vectors of processed neighboring blocks, with the IGMC mode of the Frojdh-AAPA combination.

Frojdh discloses that in its described IGMC mode, a block's motion vector is predicted based on neighboring blocks in the current frame, but does not disclose the implementation details of how neighboring blocks are used to form that prediction. Frojdh, [0023], [0055]. A POSITA would be motivated to look to other prior art for details on how to predict a current block's motion vector based on its neighboring blocks. Hwang teaches how to use the motion vectors of neighboring blocks to determine the motion vector of a search (i.e., current) block. Hwang, Abstract, 2:42-44. Hwang explains that "a motion vector of a block may have a correlation with motion vectors of neighboring blocks, which can be utilized in reducing the computational burden required to determining [*sic*] the motion vectors." Hwang, 2:31-34. In other words, Hwang complements the Frojdh-AAPA combination by teaching an improved method for determining the motion vector of a block based on its previously coded neighbors.

Both Frojdh and Hwang teach efficient methods of video compression using motion compensation. Frojdh, [0002]; Hwang, 1:14–29. In both references, this includes calculating motion vectors for parts of a frame based on the motion vectors of neighboring parts of the frame. Frojdh, [0055]; Hwang, 2:40–50. Both references also recognize that the calculated motion vector

may be the zero vector. Frojdh, [0022]; Hwang, 2:51–57. Hwang further describes how its approach to calculating a motion vector for a block can avoid the need to perform a full search for the block, which can be computationally expensive. Hwang, 2:7-13, 3:65-4:12. In other words, the Frojdh-AAPA-Hwang combination amounts to using a known technique (Hwang's motion vector determination based on candidate vectors) to improve a similar system (avoiding a full search in the IGMC mode of the Frojdh-AAPA combination) in the same way (prediction based on the motion vectors of neighboring blocks).

A POSITA would reasonably have expected success incorporating Hwang's motion vector determination into Frojdh's IGMC mode because Hwang merely improves upon "[o]ne of the methods which have been used most frequently in estimating the displacement of an object in a video sequence." Hwang, 1:57-59. Thus it would have been well within the capabilities of a POSITA to apply Hwang's improved method to the purpose for which it is widely used.

2. Karczewicz

Karczewicz teaches an "apparatus, and an associated method, for encoding, and decoding, a video sequence utilizing motion compensation prediction." Karczewicz, 1:7-8. Karczewicz teaches at least five different modes for coding a segment of a frame of a video sequence. Karczewicz, 31:14-25, claims 61, 64-65. In some of these modes, "[m]otion fields of a segment are predicted from adjacent segments of a video frame and by using orthogonal affine motion vector field models." Karczewicz, 1:9-10, *see id.*, 14:2-5. Thus, "motion vector fields are formed with a reduced number of bits while still maintaining a low prediction error." Karczewicz, 1:11-13.

Two of Karczewicz's coding modes exploit the similarity (where present) between motion vector fields of neighboring segments[2] by computing a motion vector field of a segment from its previously coded neighboring segment. Karczewicz, 11:1-8, 31:14-25, claims 61, 64-65. Karczewicz teaches other modes where a small refinement field is also coded to account for differences between motion vectors of neighboring segments. *Id.* Specifically, after coding a first segment, Karczewicz determines whether it is "more efficient to model the second segments in terms of the affine motion model previously determined for the first segment, rather than according to the newly determined affine motion coefficients for the second segment itself." Karczewicz, 14:27-15:1. Karczewicz explains that "in many cases, it is found that after projection of the motion field from a neighboring segment, very little or even zero refinement information is required." Karczewicz, 15:27-30. "This can result in a significant reduction in the amount of information that must be transmitted from encoder to decoder." Karczewicz, 15:30-16:1. And if zero refinement is needed, "the motion vector field of the second segment can be predicted purely on the basis of motion coefficients [from the first segment] already stored in the decoder." Karczewicz, 16:2-3. Notably, Karczewicz also explains that the second segment "can be coded by using a zero motion vector field, e.g., a copy form the reference frame." Karczewicz, 31:20-24.

Finally, prediction error between the motion compensated predicted version of the current frame and the current frame itself can be generated and sent to a decoder along with the motion vector information. Karczewicz, 20:21-29, 22:5-6, Fig. 1. Figure 1 illustrates the encoder and decoder of a video communication system in which an embodiment of the present invention is operable.

[2] Segments are typically macroblocks, but Karczewicz leaves open the possibility for other segmentation schemes. Karczewicz, 7:15-20 , 31:7-9.

Nokia Exhibit 2014, p. 41
Snap/Hisense v. Nokia
IPR2025-01440

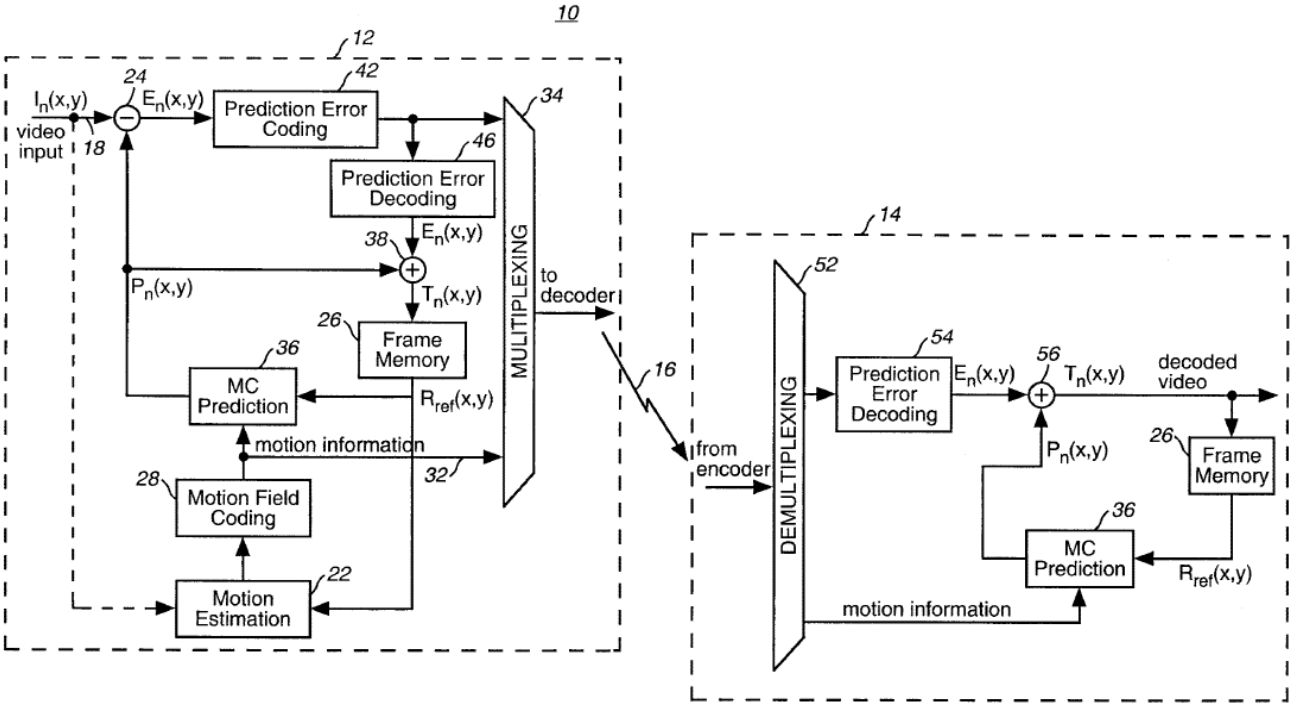

A POSITA would have understood and found it obvious to combine coding modes into a single mode so that the number of bits necessary to indicate the coding mode is reduced. A POSITA would have understood and found it obvious that if a previously coded neighboring segment has a zero motion vector, it would be predicted using the reference picture, so that better efficiency is achieved. Further, a POSITA would have understood and found it obvious to code a segment based on the characteristics of the motion in the neighboring segment(s) so that distortion due to coding a segment with reference to a neighboring segment is balanced against the amount of data required to transmit a motion vector to the first segment. A POSITA would have also understood and found it obvious to code a segment in the most efficient way from a rate distortion sense. A POSITA also would have understood and found it obvious that a surrounding segment is the same as a neighboring segment because "neighboring" encompasses "surrounding."

A POSITA would have further understood and found it obvious that a zero MCI bit is an indication of the skip coding mode because the two inter coding modes disclosed by Karczewicz

whose functionalities correspond to the modified skip coding mode are the only two in which no motion coefficients are sent. Thus, the bit indicating whether the prediction field of a neighboring is used, and the MCI bit, together, indicate the skip coding mode in the encoded bitstream.

A POSITA also would have understood and found it obvious that the motion field coder 28 and motion compensated predictor 36 together are the recited "motion estimation block" because the motion field coder 28 forms a motion vector field for a segment with input from the motion estimator 22, and the motion compensated predictor 36 generates a prediction frame with input from the motion field coding and the frame memory.

A POSITA would have understood and found it obvious that communications systems used for video conferencing are "multimedia terminals" because they render at least video and sound media. A POSITA further would have understood and found it obvious that where there is no difference between a motion compensated predicted version of a frame and the actual version of a frame, no residual, i.e., predicted error, information would be provided.

3. Yamada

As another example, Yamada discloses: an "image coding device," wherein "the input image controller excludes either one field of each of the frames at a predetermined rate when the input motion image signal is of the interlace mode, and outputs the processed image signal together with the process information showing the thus excluded fields, and the image coder detects the exclusion of fields on the basis of the process information, performs a predictive coding with respect to the thus excluded fields on the basis of the other fields, and generates a coded data corresponding to the excluded fields." Yamada, 3:15-26. In this "configuration," "a predictive coding is applied to the skipped field, thereby [] reduc[ing] the amount of coding." Yamada, 3:26-31.

Nokia Exhibit 2014, p. 43
Snap/Hisense v. Nokia
IPR2025-01440

4. Srinivasan

As another example, Srinivasan discloses: "a skipped macroblock as a predicted macroblock whose motion is equal to its causally predicted motion and which has zero residual error." Srinivasan, Abstract. Srinivasan teaches, for example, a codec in which a modified skip code is used: "[t]he new definition of skipped macroblock is a predicted macroblock whose motion is equal to its causally predicted motion, and which has zero residual error. (The point of difference from the other definition is the default motion is equal to the motion predictor, and this may not necessarily be zero.) For example, in some embodiments, predicted motion vectors for a current macroblock are taken from the macroblock directly above or directly to the left of the current macroblock. Or, horizontal and vertical components of the predictor are generated from the horizontal and vertical component-wise medians of the macroblocks the left, top, and top right of the current macroblock." Srinivasan, 17:1-16. "If a given macroblock in a predicted frame has no information of certain types (e.g., no motion information for the macroblock and no residual information), the encoder (700) may encode the macroblock as a skipped macroblock. If so, the encoder signals the skipped macroblock in the output bitstream of compressed video information (795)." Srinivasan, 11:15-20.

5. Jozawa

As another example, Jozawa discloses: "[v]ideo data predictive encoding methods using the two kinds of prediction modes, the global and local motion compensation modes, are provided, by which unnecessary MCSEL is reduced as much as possible, and the data compression efficiency is improved." Jozawa, Abstract. Jozawa teaches that "[i]f no skip and encoding was performed, then COD=0, while if the macroblock was skipped, then COD=1." Jozawa, 5:53-54. "The macroblock skipping indicated by COD is adopted when the global motion compensation is used and all DCT coefficients are zero, that is, the macroblock skipping is not performed when the local

motion compensation is adopted. Therefore, relevant MGSEL appearing in List 4 is omitted in List 5. In the macroblock skipping, all the following steps with respect to the current macroblock are skipped and the operation for processing the next macroblock is started. Therefore, it is unnecessary to encode the macroblock type and the DCT coefficient of the current macroblock; thus, a large compression can be achieved." Jozawa, 13:64-14:8.

6. Sun

As another example, Sun discloses: "[a] global motion vector coding scheme" where "[l]ocal motion vectors are derived from the global motion parameters for individual macroblocks" and "used to identify reference blocks in a current reference frame." Sun, Abstract. Sun teaches that "there are two GMVC [Global Motion Vector Coding] modes." Sun, 4:39-40. "First is the GMVC_COPY mode," which "is similar to the 'skip' or 'copy' mode used in current video coding standards." Sun, 4:40-43. "The second GMVC mode is GMVC_16 mode.%If a macroblock is GMVC_16 mode, then only the residual transform coefficients are coded into the bit stream." Sun, 4:50-52. Sun also taught integrating its teachings with standard video codec techniques. See, e.g., Sun, 1:7-26 ("Global motion compensation (GMC) techniques, such as the "sprite" coding technique used in MPEG-4 and a "reference picture resampling" technique in Annex P of H.263+, have been used in advanced video coding. These techniques usually follow similar steps. Referring to FIG. 1, for each current image frame 12, a reference image 14 is derived based on global motion vectors 16. The global motion vectors 16 take into account global image changes between the previous image frame 18 and the current image frame 12. For example, the global motion vectors 16 account for changes in camera angle, camera zooming, etc. that have occurred between frame 18 and 12. The current image 12 is then coded and decoded using the reference frame 14. For example, the portion of an image in MacroBlock (MB) 20 may be exactly the same in the associated macroblock 22 in reference image 14. If this is the case, then the image

Nokia Exhibit 2014, p. 45
Snap/Hisense v. Nokia
IPR2025-01440

information in macroblock 20 does not have to be encoded. The image data in block 22 in reference frame 14 can be copied into macroblock 20 of current image 12.”).

7. Moore

As another example, Moore discloses: “[s]kipped macroblocks [that] are used in both P- or B-pictures. . . When reconstructed, the skipped macroblocks have zero DCT residuals and assume default values for the motion information. In a P-picture, they assume zero length motion vectors, while in a B-picture they assume the same motion vector as the last coded macroblock.” Moore, 21:3-12. Moore teaches that “the properties of macroblock encoding are used to efficiently construct special B and P pictures using a small number of specially coded macroblocks in combination with a large number of skipped macroblocks to produce whole picture effects which achieve a transition from one reference picture to the next in a smooth and visually pleasing way.” Moore, 22:5-11. To code transition pictures, Moore discloses a number of key macroblock coding properties including “a) Skipped macroblocks in B-pictures result in the decoder inserting a macroblock which copies the macroblock type (forward, backward or both motion vectors) and the motion vectors from the previous Macroblock in the current picture and have no DCT residual coefficients. That is they copy the corresponding macroblock from the previous picture with an offset equivalent to that in the last coded macroblock; and b) Skipped macroblocks in P-pictures result in the decoder inserting a macroblock which resets the motion vector to be zero length and has no DCT coefficients. That is, they copy the corresponding macroblock in the previous reference picture[.]” Moore, 22:18-33. Using these properties, three simple macroblock types are defined that are used to build transition templates: “a) Past Copy Macroblock (PCM): This macroblock type copies the corresponding macroblock from the previous reference picture (B- and P-pictures); b) Future Copy Macroblock (FCM): This macroblock type copies the corresponding macroblock from the future reference picture (B-pictures); and c) Merge Macroblock (MM): This

macroblock type averages the corresponding regions of the past and future reference pictures (B-pictures)." Moore, 22:40-51.

8. VCEG-N77

As another example, VCEG-N77 discloses "a motion vector coding technique, where global motion parameters are used for motion vector interpolation." VCEG-N77, Section 1. VCEG-N77 teaches that "[f]or each P frame, a GMVC_flag symbol is added right after the picture header to signal if GMVC (Global Motion Vector Coding) is on or off for the current slice. . . If GMVC is off, then all following bit stream will be exactly same as that of TML . . . If GMVC is on, the global motion vectors (GMV's) are to be coded after the GMVC_flag; then, for each image MB, if the MB mode is determined to be one of the GMVC modes, motion vector coding can be simply skipped; the motion vector values for all 4×4 image blocks in that specific MB can be derived from GMV's through a bilinear interpolation." VCEG-N77, Section 2.1. VCEG-N77 defines two GMVC modes for the macroblock: "[t]he first is the GMVC_COPY mode. This is very similar to the "skip" or "copy" mode used in current video coding standards. The traditional "copy" mode indicates a macroblock is a direct "copy" of the macroblock at the same location in the previous reference frame. The only difference in "GMVC_COPY" is that the "copy" of each motion compensated block in the GMVC_COPY mode will follow the motion vectors derived by Eq. (1). Like in the "copy" mode, there is no residual coding in the GMVC_COPY mode. . . The second GMVC mode is GMVC_16 mode. If a macroblock is determined to be GMVC_16 mode, then only the transform coefficients of the motion compensated residual are coded into the bitstream, not its motion vector. The motion vector of each 4x4 block in that macroblock is derived from Eq. (1)." VCEG-N77, Section 2.2. VCEG-N77 discloses calculating motion vector using "bilinear motion vector interpolation [using] the motion vectors of four 4×4 image blocks at the four corners of the frame." VCEG-N77, Section 2.2.

Nokia Exhibit 2014, p. 47
Snap/Hisense v. Nokia
IPR2025-01440

9. MPEG-1

MPEG-1 discloses "skipped macroblocks" for which no data are stored or coded. MPEG-1, Sections 2.1.131, 2.4.4.4 ("For some macroblocks there are no coded data, that is neither motion vector information nor DCT information is available to the decoder. These macroblocks are called skipped macroblocks and are indicated when the macroblock_address_increment is greater than l."). MPEG-1 further discloses that "[i]n P-pictures, the skipped macroblock is defined to be a macroblock with a reconstructed motion vector equal to zero and no DCT coefficients" and "[i]n B-pictures, the skipped macroblock is defined to have the same macroblock-type (forward, backward, or both motion vectors) as the prior macroblock, differential motion vectors equal to zero, and no DCT coefficients." MPEG-1, Section 2.4.4.4. MPEG-1 teaches that these macroblocks are integrated in typical video encoding and decoding techniques, but "[f]irstly, for a given macroblock, the coding mode is chosen." MPEG-1, Section 0.3. The coding mode "depends on the picture type, the effectiveness of motion compensated prediction in that local region, and the nature of the signal within the block." Secondly, "depending on the coding mode, a motion compensated prediction of the contents of the block based on past and/or future reference pictures is formed." MPEG-1, Section 0.3. This prediction is used to form an error signal for a current block on which a transform and quantization is performed and then the quantized coefficient data are encoded. MPEG-1, Sections 0.3, D.2.2.3.

A POSITA would have understood and found it obvious based on MPEG-1's teachings that during encoding, a macroblock that is encoded as a skipped macroblock is assigned the syntax element "macroblock-address-increment" that has a value greater than 1.

a) Motivation to Combine MPEG-1 and Hwang

MPEG-1 and Hwang are each in the same field of endeavor of encoding and decoding video data. Both MPEG-1 and Hwang teach efficient methods of video compression using motion compensation. MPEG-1, Section 0.2; Hwang, 1:14-29, 2:7-13, 3:65-4:12.

MPEG-1 discloses that a skipped macroblock (for P pictures) may be assigned a zero motion vector or (for B pictures) a motion vector (forward, backward, or both motion vectors) obtained from the prior neighboring macroblock but does not disclose the implementation details of how neighboring blocks are used to obtain a predicted motion vector for a current (skipped) macroblock. MPEG-1, Section 2.4.4.4. A POSITA would be motivated to look to other prior art for details on how to predict a current block's motion vector based on its neighboring blocks, and would have understood that the implementation details, as taught by Hwang, were a known solution.

Hwang teaches how to use the motion vectors of neighboring blocks to determine the motion vector of a search (i.e., current) block. Hwang, Abstract, 2:42-44. Hwang explains that "a motion vector of a block may have a correlation with motion vectors of neighboring blocks, which can be utilized in reducing the computational burden required to determining [*sic*] the motion vectors." Hwang, 2:31-34. For example, the motion vector for the search block may be selected from three "candidate vectors," which consist of an X-vector and Y-vector (both of which are selected from the motion vectors of neighboring blocks), and a 0 vector. Hwang, 4:51-59, 5:7-10. Hwang further discloses calculating the distortions between the search block and each of the three predicted blocks corresponding to the three candidate vectors and selecting the candidate vector associated with the minimum distortion. Hwang, 5:15-21. Hwang further discloses that the motion vectors of processed blocks are stored in a motion vector memory 110, from which the motion vectors can be obtained when processing a subsequent neighboring search block. Hwang, 4:33-50,

Figure 2, Figure 4. In other words, as part of processing a first search block, a zero vector may be selected for that first search block, and when subsequently processing a second search block ("first segment"), the previously processed first search block ("second segment") has been associated with a zero vector. An X-vector or Y-vector selected from that previously processed first search block may therefore be a zero vector. Furthermore, if that zero vector results in a predicted block that minimizes distortion of the second search block (the recited "first segment"), it will be selected as the second search block's motion vector.

Combining Hwang's teaching of determining a block's motion vector based on candidate vectors derived from the motion vectors of processed neighboring blocks with MPEG-1's teaching of using a motion vector (forward, backward, or both motion vectors) obtained from the prior neighboring macroblock for a skipped macroblock provides an improved, computationally efficient, method for determining predicted motion vectors. A POSITA would have been motivated to make this combination because it uses a known technique (Hwang's motion vector determination based on candidate vectors) to improve a similar system (using prior neighboring macroblock's motion vectors) in the same way (prediction based on the motion vectors of neighboring blocks).

Thus, MPEG-1 explains using a zero motion vector or motion vector(s) from prior neighboring macroblocks, and Hwang supplements MPEG-1's teachings by illustrating how to determine whether to utilize the zero motion vector (e.g., when it minimizes distortion compared to other candidate motion vectors including the motion vectors from the neighboring blocks). A POSITA would have been motivated to combine MPEG-1 and Hwang as Hwang provides an improvement to MPEG-1 in terms of a criterion or basis to select a zero or non-zero motion vector based on information of neighboring blocks.

b) Motivation to Combine MPEG-1 and AAPA

Nokia Exhibit 2014, p. 50
Snap/Hisense v. Nokia
IPR2025-01440

The ’808 patent background (AAPA) describes a generic video coding system with exemplary video encoder and decoder, illustrated below in Figures 1 and 2. ’808 Patent, 3:44-52. The video encoder includes a control manager, motion estimator, a motion field coder, a motion compensated predictor, and a video multiplex coder. ’808 Patent, 4:1-12, Figure 1. And the video decoder includes a control manager, video multiplex decoder, and motion compensated prediction block. ’808Patent, 8:19-26, Figure 2. Moreover, other video encoders and decoders resembling the exemplary video encoder and decoder of the ’808 patent background were well known before the earliest claimed priority date of the ’808 patent.

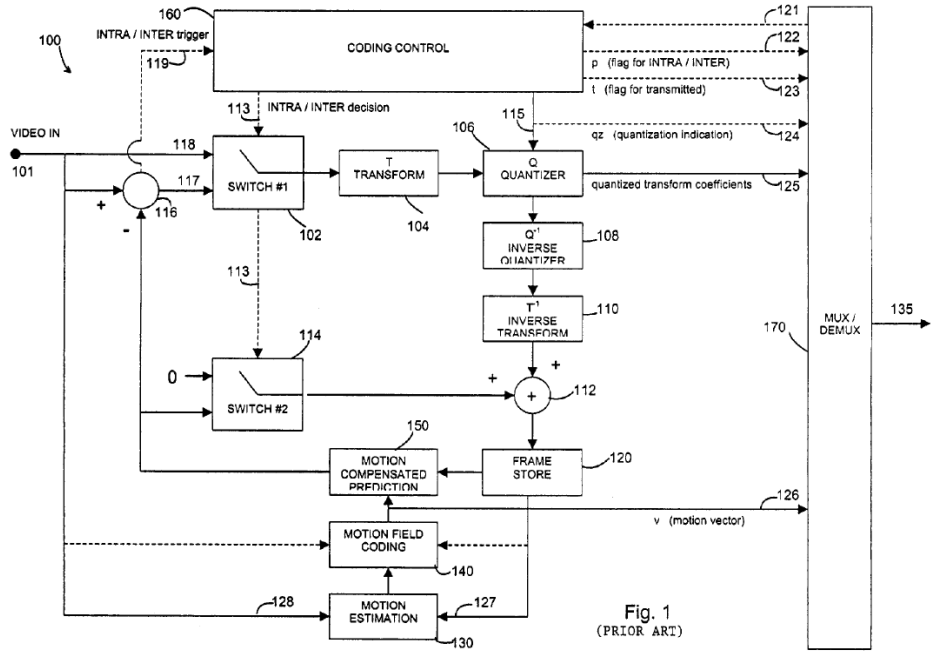

Fig. 1
(PRIOR ART)

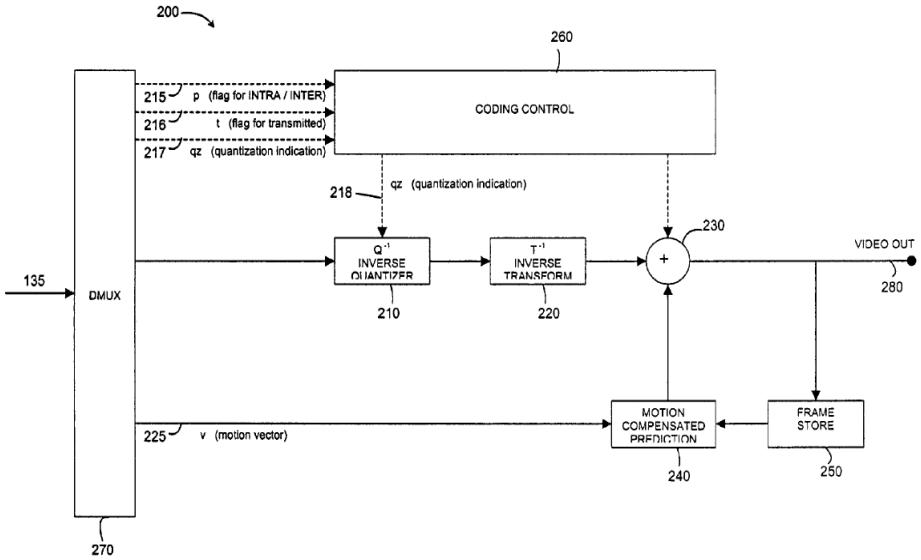

Fig. 2
(PRIOR ART)

The ’808 Patent and MPEG-1 are each in the same field of endeavor of encoding and decoding video data. Both MPEG-1 and the ’808 patent describe an encoder and decoder that use motion compensation. See, e.g., MPEG-1, Section 0.2, Annex D; ’808 patent, Abstract, 1:9-11, 3:11-21.

As described above, MPEG-1 discloses a method for compression of video signal data and describes both an encoder and decoder of video data. MPEG-1, Sections 0.3, 0.4, Annex D. However, MPEG-1 does not disclose the implementation details of those encoder and decoder components. A POSITA would have been motivated to look to AAPA’s teachings for those implementation details, as both MPEG-1 and AAPA describe performing motion compensation for video. MPEG-1, Section 0.2; ’808 Patent, 3:11-21.

A POSITA would have had a reasonable expectation of success in making the proposed combination because it merely amounts to using known techniques (AAPA’s exemplary video encoder and video decoder, and the components therein) to improve a similar system (MPEG-1’s video coder and decoder, respectively) in the same way (to perform motion compensation of video using intra-frame and inter-frame). This combination also merely amounts to combining prior art

elements (AAPA's video encoder with coding control, motion compensated prediction, and multiplexer, and AAPA's video decoder with coding control, motion compensated prediction, and demultiplexer) according to known methods (as evidenced AAPA, which shows that a POSITA would have known how to use the disclosed video encoder and video decoder components in a similar video coding system).

c) Motivation to Combine MPEG-1, AAPA, and Hwang

A POSITA would have been motivated to combine Hwang's teaching of determining a block's motion vector, based on candidate vectors derived from the motion vectors of processed neighboring blocks, with the MPEG-1-AAPA combination.

MPEG-1 discloses that a skipped macroblock (for P pictures) may be assigned a zero motion vector or (for B pictures) a motion vector (forward, backward, or both motion vectors) obtained from the prior neighboring macroblock but does not disclose the implementation details of how neighboring blocks are used to obtain a predicted motion vector for a current (skipped) macroblock. MPEG-1, Section 2.4.4.4. A POSITA would be motivated to look to other prior art for details on how to predict a current block's motion vector based on its neighboring blocks. Hwang teaches how to use the motion vectors of neighboring blocks to determine the motion vector of a search (i.e., current) block. Hwang, Abstract, 2:42-44. Hwang explains that "a motion vector of a block may have a correlation with motion vectors of neighboring blocks, which can be utilized in reducing the computational burden required to determining [*sic*] the motion vectors." Hwang, 2:31-34. In other words, Hwang complements the MPEG-1-AAPA combination by teaching an improved method for determining the motion vector of a block based on its previously coded neighbors.

Both MPEG-1 and Hwang teach efficient methods of video compression using motion compensation. MPEG-1, Section 0.2; Hwang, 1:14–29. In both references, this includes

calculating motion vectors for parts of a frame based on the motion vectors of neighboring parts of the frame. MPEG-1, Section 2.4.4.4; Hwang, 2:40–50. Both references also recognize that the calculated motion vector may be the zero vector. MPEG-1, Section 2.4.4.4; Hwang, 2:51–57. Hwang further describes how its approach to calculating a motion vector for a block can avoid the need to perform a full search for the block, which can be computationally expensive. Hwang, 2:7-13, 3:65-4:12. In other words, the MPEG-1-AAPA-Hwang combination amounts to using a known technique (Hwang's motion vector determination based on candidate vectors) to improve a similar system (using prior neighboring macroblock's motion vectors) in the same way (prediction based on the motion vectors of neighboring blocks).

A POSITA would reasonably have expected success incorporating Hwang's motion vector determination into MPEG-1 because Hwang merely improves upon "[o]ne of the methods which have been used most frequently in estimating the displacement of an object in a video sequence." Hwang, 1:57-59. Thus it would have been well within the capabilities of a POSITA to apply Hwang's improved method to the purpose for which it is widely used.

10. H.263+

H.263+ is a video compression standard developed by the ITU-T. H.263+ teaches predicting a motion vector based on the motion vector of neighboring segments. H.263+, § 6.1.1 ("In case of one vector per macroblock, the candidate predictors for the differential coding are taken from three surrounding macroblocks as indicated in Figure 12. The predictors are calculated separately for the horizontal and vertical components."). As illustrated in Figure 12, "[f]or each component, the predictor is the median value of the three candidate predictors for this component." *Id*.

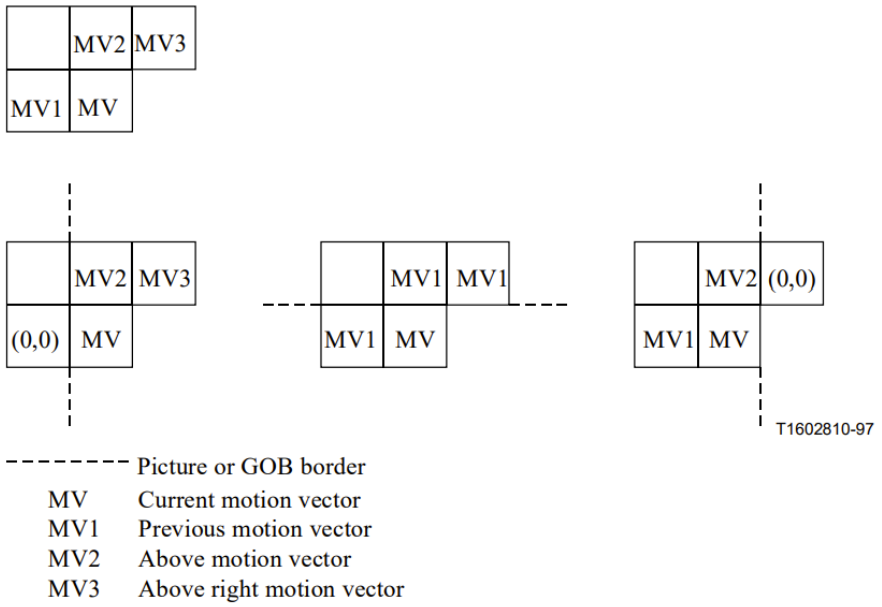

H.263+ also discloses skipped macroblocks, such that when a bit is "set to '1,' no further information is transmitted for th[e] macroblock; in that case the decoder shall treat the macroblock as an INTER macroblock with motion vector for the whole block equal to zero and with no coefficient data." H.263+, § 5.3.1.

H.263+ teaches that setting COD to "1" indicates a skip mode for B-pictures, EP-pictures, and EI-pictures. H.263+, pp. 33-34, 108-109. Furthermore, H.263+ also teaches that a predictor for a current block "is the median value of the three [neighboring] candidate predictors," namely, MV1, MV2, and MV3. H.263+, pp. 44-45, Figure 12. When a median of MV1, MV2, and MV3 is zero, a zero motion vector is assigned to the current macroblock. Conversely, if the median of MV1, MV2, and MV3 is a non-zero value, then a non-zero motion vector is assigned to the current macroblock. "A macroblock vector is obtained by adding predictors to the vector differences indicated by MVD," which may be deemed as residual information. H.263+, pp. 44-45.

The goal of skip mode is to bypass the encoding of blocks that do not change significantly between frames. Similarly, the goal of the differential motion vector is to bypass the encoding of blocks that do not change significantly between neighboring blocks in the same frame. In instances

where the motion difference between a current block and its neighboring block is near zero, a POSITA would be motivated to extend skip mode to the current block based on motion information of the neighboring block, thereby improving compression efficiency, where the current block would be assigned a zero motion vector (e.g., when a predictor value of a neighboring block is zero) or a predicted non-zero motion vector (e.g., when a predictor value of a neighboring block is non-zero). Accordingly, a POSITA would have understood and found it obvious based on H.263+'s teaching, that in skip mode, a current block may be assigned a zero motion vector or a predicted non-zero motion vector based in part on motion information of a neighboring block.

As a further example, H.263+ teaches that "[w]hen the corresponding macroblock was coded in INTRA mode (if not in PB-frames mode with bidirectional prediction) or was not coded (COD = 1), the candidate predictor is set to zero." Accordingly, when all three neighboring blocks are not coded, their predictors are all set to zero, and the predictor of the current macroblock will also be set to zero. Further, "the candidate predictors MV2 and MV3 are set to MV1 if the corresponding macroblocks are outside the picture (at the top) or outside the GOB (at the top) if the GOB header of the current GOB is non-empty; or outside the slice when in Slice Structured mode." In such cases, MV1 will be used as the predictor of the current macroblock. If MV1 is a zero motion vector, the predictor of the current macroblock will also be set to zero. Thus, a POSITA would have understood and found it obvious, based on H.263+'s teaching, that if a neighboring block has a zero motion vector, the current macroblock may be assigned a zero motion vector.

Respondents incorporate by reference prior art from the prosecution histories and background sections of the asserted patents. Respondents expect to rely on the testimony of one

or more expert witnesses and documents referenced by those expert witnesses in support of these contentions and incorporate those forthcoming expert reports as if fully set forth herein.

Respondents contend that there are no secondary considerations of non-obviousness evidencing the validity of any of the asserted claims of the ’808 patent. Secondary considerations of non-obviousness, also referred to as objective indicia of non-obviousness, “can include copying, long felt but unsolved need, failure of others, commercial success, unexpected results created by the claimed invention, unexpected properties of the claimed invention, licenses showing industry respect for the invention, awards or other industry praise for the invention, and skepticism of skilled artisans before the invention.” *Power Integrations, Inc. v. Fairchild Semiconductor Int’l, Inc*., 711 F.3d 1348, 1368 (Fed. Cir. 2013). “A nexus between the merits of the claimed invention and evidence of secondary considerations is required in order for the evidence to be given substantial weight in an obviousness decision.” *Ruiz v. A.B. Chance Co.*, 234 F.3d 654, 668 (Fed. Cir. 2000). Moreover, even if a nexus exists, secondary considerations of non-obviousness “simply cannot overcome [a] strong prima facie showing of obviousness.” *Sundance, Inc. v. DeMonte Fabricating Ltd.*, 550 F.3d 1356, 1368 (Fed. Cir. 2008). Nokia has not established the existence of any objective indicia of non-obviousness or secondary considerations. Respondents reserve the right to supplement their contentions to respond to any such evidence should Nokia be permitted to raise them in the future. While discovery in this case is ongoing, and Respondents’ investigation continues (which will include expert discovery), to the extent Nokia contends that one or more asserted claims of the ’808 patent is not obvious based on secondary considerations recognized by relevant authority Respondents contend such allegations are without merit.

For example, Nokia has not identified any evidence of copying of the purported inventions of the asserted claims of the ’808 patent. *See* Nokia’s January 3, 2024, Objections and Responses

Nokia Exhibit 2014, p. 57
Snap/Hisense v. Nokia
IPR2025-01440

to Respondents' First Set of Interrogatories (Nos. 1-27), Interrogatory No. 10. Similarly, Nokia has provided no evidence of any failure of others to realize any purported inventions of the asserted claims of the '808 patent, or any evidence of any long felt but unsolved need solved by the purported inventions of the asserted claims of the '808 patent. *Id.* To the contrary, the widespread availability of video codecs is contrary evidence of any long-felt need for the purported inventions of the asserted claims of the '808 patent.

Nokia also has not identified any evidence that the purported inventions of the asserted claims of the '808 patent have enjoyed any commercial success. *Id*. To the extent that Nokia claims that sales of any accused products constitutes commercial success, Nokia has not identified any evidence of any nexus between the claimed invention and such alleged commercial success. Moreover, any commercial success of the accused products may be due to factors other than the merits of the claims, including non-patented features or functionalities, marketing efforts, or other financial or economic incentives related to the sale or distribution of the accused products. Nokia also has not provided evidence of unexpected results or unexpected properties in the purported inventions of the asserted claims of the '808 patent. *Id.*

Nokia has not identified any evidence of industry respect for the purported inventions of the asserted claims of the '808 patent, and also no evidence of any awards or other industry praise for any purported inventions of the asserted claims of the '808 patent. *Id.* Nokia has not identified any evidence of any skepticism of skilled artisans prior to purported inventions of the asserted claims of the '808 patent; to the contrary, the prior art identified herein establishes not only a lack of skepticism but an appreciation that the purported inventions of the asserted claims of the '808 patent were known to those of skill in the art. Nokia has not identified any evidence of any failed attempts by others to resolve any of the alleged problems that were allegedly solved by any of the

alleged inventions claimed in the asserted patents. *Id.* Nokia has not identified any evidence of any teaching away from any of the alleged inventions claimed in the asserted patents. *Id.* Rather, and as discussed above, there are multiple references anticipating and/or or rendering obvious the alleged inventions. Nokia has not identified any evidence of any long-felt but unresolved need for the alleged inventions claimed in the asserted patents. As described above, the asserted claims of the '808 patent are anticipated and/or rendered obvious by multiple prior art references. To the extent there was ever a need for any of the alleged inventions, they were well known to those in the art.

If Nokia identifies any additional secondary considerations of non-obviousness, Respondents reserve the right to amend and/or supplement their contentions.

C. Other Invalidity Grounds

Respondents hereby identify grounds upon which the asserted claims are invalid for failure to meet the requirements of 35 U.S.C. §§ 112(a), 112(b), and 112(f). These contentions shall not be construed as an admission that any claim construction advanced by Respondents in this case is in any way inconsistent, flawed, or erroneous. Nor should these contentions prevent Respondents from advancing claim construction and/or non-infringement positions in lieu of, or in addition to, invalidity positions. Further, these contentions shall not be construed as an admission of or acquiescence to Nokia's purported construction of the claim language or of other positions advanced by Nokia during the course of this litigation. Respondents' Invalidity Contentions under 35 U.S.C. § 112 may depend, in part, on the Court's claim construction, as well as Nokia's alleged scope of the asserted claims. Consequently, Respondents identify only the issues under 35 U.S.C. § 112 of which they are presently aware.

11. 35 U.S.C. § 101 – Ineligible Subject Matter

Under 35 U.S.C. § 101, "[w]hoever invents or discovers any new and useful process, machine, manufacture, or composition of matter, or any new and useful improvement thereof, may obtain a patent therefor, subject to the conditions and requirements of [Title 35]." "This provision, however, contains longstanding judicial exceptions, which provide that laws of nature, natural phenomena, and abstract ideas are not eligible for patenting." *ChargePoint, Inc. v. SemaConnect, Inc.*, 920 F.3d 759, 765 (Fed. Cir. 2019). To determine if claims are patent eligible, the first step is to "determine whether the claims at issue are directed to one of those patent-ineligible concepts." *Alice Corp. v. CLS Bank Int'l*, 573 U.S. 208, 217 (2014). If so, the second step is to "search for an 'inventive concept'—*i.e.*, an element or combination of elements that is sufficient to ensure that the patent in practice amounts to significantly more than a patent upon the ineligible concept itself." *Id.* at 217–18 (internal quotation marks omitted).

The asserted claims of the '808 patent are directed to an abstract idea under the first step of the two-step *Alice* analysis. Specifically, the claims are directed to the patent-ineligible abstract idea of predicting an image based on surrounding image data. *See RecogniCorp, LLC v. Nintendo Co., Ltd.*, 855 F.3d 1322, 1326 (Fed. Cir. 2017) (finding claims related to the "abstract idea of encoding and decoding image data" were invalid under Section 101); *Realtime Adaptive Streaming, Inc. v. Haivision Network Video*, 2018 WL 6521978 (D. Del. Dec. 12, 2018) (noting claims were specifically "drawn to the abstract idea of: (1) determining a parameter, (2) selecting a method of compression, (3) compressing the data with the chosen algorithm, and (4) storing the data").

The asserted claims of the '808 patent also fail the second step of the *Alice* analysis because they do not recite an "inventive concept" capable of rendering the abstract idea into patent-eligible subject matter. The claims merely recite conventional functions performed by generic computing

Nokia Exhibit 2014, p. 60
Snap/Hisense v. Nokia
IPR2025-01440

equipment, used in conventional ways. For example, the patent states that the use of a skip mode was "conventional" and already "used in JM1 of the JVT codec." '808 patent, 14:17-29. The concept of a receiving device predicting image data based on data that the receiving device already possesses was also conventional at the time of the patent. *See, e.g.*, Haskell, 375-76, Fig. 17.6. The use of a standard video encoder or decoder to implement the abstract idea does not add anything significant to the abstract idea. "If a claim's only 'inventive concept' is the application of an abstract idea using conventional and well-understood techniques, the claim has not been transformed into a patent-eligible application of an abstract idea." *BSG Tech. LLC v. Buyseasons, Inc.*, 899 F.3d 1281, 1290–91 (Fed. Cir. 2018) (patent directed to "system and method for indexing data" directed to patent-ineligible abstract idea and lacked inventive concept).

12. 35 U.S.C. § 112(a) – Enablement and Written Description

To comply with the enablement requirement of 35 U.S.C. § 112(a), the patent specification must teach those skilled in the art how to make and use the full scope of the claimed invention without undue experimentation. *In re Wright*, 999 F.2d 1557, 1561 (Fed. Cir. 1993). Courts consider multiple factors to determine whether experimentation is undue, including: "(1) the quantity of experimentation necessary, (2) the amount of direction or guidance presented, (3) the presence or absence of working examples, (4) the nature of the invention, (5) the state of the prior art, (6) the relative skill of those in the art, (7) the predictability or unpredictability of the art, and (8) the breadth of the claims." *In re Wands*, 858 F.2d 731. 737 (Fed. Cir. 1988).

To comply with the written description requirement of 35 U.S.C. § 112(a), the patent specification must describe an invention in sufficient detail that one skilled in the art can clearly conclude that the inventor invented the claimed invention. *Regents of the Univ. of Cal. v. Eli Lilly & Co.*, 119 F.3d 1559, 1566 (Fed. Cir. 1997). Further, to satisfy the written description requirement, the disclosure of the patent must "convey with reasonable clarity to those skilled in

the art that, as of the filing date sought, [the inventor] was in possession of the invention." *Vas-Cath Inc. v. Mahurkar*, 935 F.2d 1555, 1563-64 (Fed. Cir. 1991). "An applicant demonstrates that he was in possession of the invention by describing the claimed invention with all of its limitations using such descriptive means as words, structures, figures, diagrams, and formulas that fully set forth the invention." *Lockwood v. Am. Airlines, Inc.*, 107 F.3d 1565, 1572 (Fed. Cir. 1997). "[T]he written description inquiry looks to the four corners of the specification to discern the extent to which the inventor(s) had possession of the invention as broadly claimed. The knowledge of ordinary artisans may be used to inform what is actually in the specification, but not to teach limitations that are not in the specification, even if those limitations would be rendered obvious by the disclosure in the specification." *Rivera v. Int'l Trade Comm'n*, 857 F.3d 1315, 1322-23 (Fed. Cir. 2017) (citations omitted). In other words, even if something reflects an obvious variation of the invention disclosed in the specification, the claims are invalid for lack of written description.

The asserted claims are invalid for failure to enable and/or provide a written description of the alleged invention as required by 35 U.S.C. § 112(a). A person skilled in the art would not be able to make and use the claimed inventions by reading the specification. For example, the '808 patent fail to sufficiently describe or enable at least the following limitations: "forming a prediction for the first segment with respect to a reference frame based at least in part on the assigned motion vector for the skip coding mode"; "the motion estimation block"; "a corresponding segment of the reference frame associated with the zero motion vector"; "reference picture"; ."the second segment is predicted using motion-compensated prediction from the reference picture"; "second reference picture"; "immediately preceding"; "the second segment is predicted using motion-compensated prediction from a second reference picture"; "a second reference picture immediately preceding the picture second segment belongs to"; "a segment"; "no residual information is provided for the

first segment in an encoded bitstream"; "no residual information is provided for the first segment in the encoded bitstream"; "residual information"; "the motion vector." The '808 patent also fails to sufficiently enable "assigning either a zero motion vector or a predicted non-zero motion vector for the skip coding mode for the first segment" because it it does not describe how the "zero motion vector" or "predicted non-zero motion vector" is determined.

13. 35 U.S.C. § 112(b) – Indefiniteness

The claims of a patent must "particularly point out and distinctly claim the subject matter which the applicant regards as his invention." 35 U.S.C. § 112(b). A claim is invalid as indefinite if it is not sufficiently precise to permit a potential competitor to determine whether or not it is infringing. *Morton Int'l, Inc. v. Cardinal Chem. Co.*, 5 F.3d 1464, 1470 (Fed. Cir. 1993). Specifically, "a patent is invalid for indefiniteness if its claims, read in light of the specification delineating the patent, and the prosecution history, fail to inform, with reasonable certainty, those skilled in the art about the scope of the invention." *Nautilus, Inc. v. Biosig, Instruments, Inc.*, 572 U.S. 891, 901 (2014). Furthermore, when a claim includes a term of degree, the patent "must provide 'some standard of measuring that degree' such that the claim language provides 'enough certainty to one of skill in the art when read in context of the invention.'" *GE Lighting Solutions, LLC v. Lights of Am., Inc.*, 663 Fed. Appx. 938, 940 (Fed. Cir. 2016); *Interval Licensing LLC v. AOL, Inc.*, 766 F.3d 1364, 1370 (Fed. Cir. 2014). For terms of degree, "the patent must provide that additional information in the form of 'objective boundaries.'" *Id.* And the Federal Circuit's "case law is clear that the objective boundaries requirement applies to terms of degree." *Berkheimer v. HP Inc.*, 881 F.3d 1360, 1364 (Fed. Cir. 2018).

Under this standard, a person skilled in the art would not be able to determine the scope of the invention because of the indefiniteness of at least the following terms for lack of antecedent basis and/or mixed apparatus and method: "forming a prediction for the first segment with respect

to a reference frame based at least in part on the assigned motion vector for the skip coding mode, wherein the assigned motion vector is one of the zero motion vector and the predicted non-zero motion vector"; "the motion estimation block"; "the reference picture"; "a second reference picture"; "no residual information is provided for the first segment in an encoded bitstream"; "no residual information is provided for the first segment in the encoded bitstream"; "the motion vector."

Because neither Nokia nor Respondents have yet briefed claim construction issues, Respondents' contentions should not be seen as a suggestion that Respondents hereby limit their claims of indefiniteness, lack of enablement, or lack of written description to the terms identified herein. The contentions do not represent Respondents' agreement or views as to the meaning of any claim term. The contentions also do not represent Respondents' agreement or views as to the definiteness, written description support for, or enablement of any claim not specifically identified herein. Respondents reserve the right to supplement or amend these disclosures and to identify additional and/or different claim terms for construction.

V. U.S. PATENT NO. 8,204,134

A. Identification of Relevant Prior Art

Respondents identify the following prior art references that anticipate and/or render obvious the asserted claims of the asserted patents. The following patents and publications are prior art under at least 35 U.S.C. §§ 102(a), (b), (e), (f), and/or (g). Whether a prior art reference anticipates or renders obvious the asserted claims of the '134 patent may depend upon claim construction. Respondents have identified each prior art patent by its inventor, title, number, country of origin, date of filing, date of issue, and, where applicable, the relevant priority date, or such information may be derived from the face of the patent. Each prior art publication is identified by its title, date of publication, and, where feasible, author and publisher. For prior art under 35

Nokia Exhibit 2014, p. 64
Snap/Hisense v. Nokia
IPR2025-01440

U.S.C. § 102(b), Respondents have identified the item offered for sale or publicly used or known, the date by which the offer or use took place or the information became known, and the identity of the person or entity which made the use or which made and received the offer, or the person or entity which made the information known or to whom it was made known, to the full extent currently known.

Based on the information reasonably available to Respondents, the priority date for the ’134 patent is January 25, 2006, the filing date of Application No. 11/338,996 that led to issuance of the ’134 patent. The ’134 patent is not entitled to the priority of parent application U.S. Application No. 10/306,942 or Finnish Application No. 20020127. Support for the asserted claims was added with the filing of the application that resulted in the ’134 patent. To the extent Nokia establishes priority U.S. Application No. 10/306,942, the priority date would be November 29, 2002, the filing date of that application. To the extent Nokia establishes priority Finnish Application No. 20020127, the priority date would be January 23, 2002, the filing date of that application. Nokia bears the burden of showing on a claim-by-claim basis that it is entitled to a priority date earlier than January 25, 2006, including the filing date and description of the alleged inventions claimed in the ’134 patent in any earlier application. Nokia has not done so, including in any of its interrogatory responses served to date. If Nokia contends or demonstrates that any of the asserted claims of the ’134 patent are entitled to a priority date before January 25, 2006, then Respondents reserve the right to identify additional prior art references which anticipate or make obvious the asserted claims of the ’134 patent.

1. Prior Art Patent Publications

Respondents contend that the asserted claims are invalid under 35 U.S.C. §§ 102 and/or 103 based on the following prior art patent publications. These patent publications constitute prior art under 35 U.S.C. § 102, and their patent numbers, countries of origin, and dates of publication

Nokia Exhibit 2014, p. 65
Snap/Hisense v. Nokia
IPR2025-01440

and/or issue are included on the face of those documents. Respondents reserve the right to supplement this list as it learns in the course of discovery of other prior art patent publications that would anticipate and/or render the asserted claims obvious.

Country	Number	First Named Inventor/ Patentee
U.S.	4,390,966	Kawashima
U.S.	5,016,101	Richards
U.S.	5,122,875	Raychaudhuri
U.S.	5,144,426	Tanaka
U.S.	5,426,464	Casavant
U.S.	5,455,629	Sun
U.S.	5,543,847	Kato
U.S.	5,576,902	Lane
U.S.	5,642,294	Taniguchi
U.S.	5,680,322	Shinoda
U.S.	5,699,476	Van Der Meer
U.S.	5,768,533	Ran
U.S.	5,774,593	Zick
U.S.	5,786,858	Yagasaki
U.S.	5,835,672	Yagasaki
U.S.	5,838,265	Adolph
U.S.	5,852,630	Langberg
U.S.	5,877,812	Krause
U.S.	5,886,736	Chen
U.S.	6,064,693	Oliver
U.S.	6,072,831	Chen
U.S.	6,094,456	Ueda
U.S.	6,108,382	Gringeri
U.S.	6,205,177	Girod
U.S.	6,236,432	Lee
U.S.	6,266,158	Hata
U.S.	6,289,129	Chen
U.S.	6,307,886	Westermann
U.S.	6,314,139	Koto
U.S.	6,330,286	Lyons
U.S.	6,337,881	Chaddha
U.S.	6,363,208	Nitta
U.S.	6,470,049	Nguyen
U.S.	6,483,875	Hasebe
U.S.	6,496,980	Tillman
U.S.	6,510,553	Hazra
U.S.	6,545,989	Butler

Country	Number	First Named Inventor/ Patentee
U.S.	6,614,936	Wu
U.S.	6,639,943	Radha
U.S.	6,671,323	Tahara
U.S.	6,771,825	Hurst
U.S.	6,807,231	Wiegand
U.S.	6,909,743	Ward
U.S.	6,920,178	Curet
U.S.	6,940,904	Chen
U.S.	6,952,521	Kelly
U.S.	6,993,081	Brunheroto
U.S.	7,023,924	Keller
U.S.	7,103,669	Apostolopoulos
U.S.	2001/0024472	Sporer
U.S.	2001/0036355	Kelly
U.S.	2001/0040700	Hannuksela
U.S.	2002/0051621	Cuccia
U.S.	2002/0194354	Bolduc
U.S.	2003/0063806	Kim
CN	1173783	Naimpally
EP	0694921	Sugiyama
EP	0798932	Naimpally
EP	0898427	Sekiguchi.
EP	1005232	Wang
FI	114527	Hannuksela
GB	2352350	Hannuksela
JP	4-348690	Tomoaki
JP	8-265694	Yonemitsu
JP	10-271511	Hata
JP	11-177987	Yoneda
JP	11-275576	Bun
RU	2123769	Tsuesi
RU	2137194	Dvorkovich
WO	1991/06182	Lyon
WO	1991/13520	Lim
WO	2000/67469	Hannuksela
WO	2001/47283	Wan
WO	2001/69935	Van Der Schaar-Mitrea
WO	2001/84850	Bruls
WO	2002/054776	Karczewicz

Nokia Exhibit 2014, p. 67
Snap/Hisense v. Nokia
IPR2025-01440

2. Prior Art Non-Patent Publications

Respondents contend that the asserted claims are invalid under 35 U.S.C. §§ 102 and/or 103 based on the following published works of prior art. These publications constitute additional prior art under 35 U.S.C. § 102, and their titles, authors, publishers, and dates of publication are included on the face of those documents. In addition to the references listed below, Respondents hereby disclose as prior art publications all references disclosed below in Section V.A.3 (regarding on sale/public use), such as press releases, users manuals, and other related documentation about such prior art products. Respondents reserve the right to supplement this list as it learns in the course of discovery of other references, prior art public use, and/or sale that would anticipate and/or render the asserted claims obvious.

Title	Publication	Date	Name of First Author
ITU-T Recommendation H.264		5/2003	ITU-T
ITU-T Recommendation H.264		3/2005	ITU-T
ITU-T Recommendation H.222		2/2000	ITU-T
Rate-Distortion Optimization for Video Compression	IEEE Signal Processing Magazine	11/1998	Gary J. Sullivan
Motion-Compensating Long-Term Memory Prediction	IEEE Proceedings of International Conference on Image Processing, Vol. 2	10/1997	Thomas Wiegand
Fast Search For Long-Term Memory Motion-Compensated Prediction	IEEE Proceedings 1998 International Conference on Image Processing, ICIP98, Cat. No. 98CB36269	10/1998	Thomas Wiegand
H.264 Reference Software Version 9.0		2004	ITU/T
H.264 Reference Software Version 9.8		2005	ITU/T
Annex U with long-term pictures (AnnU_LTP.doc)	ITU – Telecommunications Standardization Sector; STUDY GROUP 16; Video Coding Experts Group	6/29/2000	Qunshan Gu

Nokia Exhibit 2014, p. 68
Snap/Hisense v. Nokia
IPR2025-01440

	(Question 15); Eleventh Meeting: Osaka, Japan		
Annex U with long-term pictures – a more conservative approach (AnnU_LTPr2.doc)	ITU – Telecommunications Standardization Sector; STUDY GROUP 16; Video Coding Experts Group (Question 15); Post-Osaka Contribution for White Document Preparation	7/10/2000	Gary Sullivan
H.263++ Annex U Draft (AnnU_LTPr3.doc)	ITU – Telecommunications Standardization Sector; STUDY GROUP 16; Video Coding Experts Group (Question 15); Post-Osaka Contribution for White Document Preparation	7/12/2000	Gary Sullivan
H.263++ Annex U Draft (AnnU_LTPr4.doc)	ITU – Telecommunications Standardization Sector; STUDY GROUP 16; Video Coding Experts Group (Question 15); Post-Osaka Contribution for White Document Preparation	7/17/2000	Gary Sullivan
H.263++ Annex U Draft (AnnU_LTPr5.doc)	ITU – Telecommunications Standardization Sector; STUDY GROUP 16; Video Coding Experts Group (Question 15); Post-Osaka Contribution for White Document Preparation	7/19/2000	Gary Sullivan
H.263++ Annex U Draft (AnnU_LTPr6.doc)	ITU – Telecommunications Standardization Sector; STUDY GROUP 16; Video Coding Experts Group (Question 15); Post-Osaka Contribution for White Document Preparation	7/20/2000	Gary Sullivan
H.263++ Annex U Draft (AnnU_LTPr7.doc)	ITU – Telecommunications Standardization Sector; STUDY GROUP 16; Video Coding Experts Group (Question 15); Post-Osaka Contribution for White Document Preparation	7/21/2000	Gary Sullivan
H.263++ Annex U Draft (AnnU_LTPr8.doc)	ITU – Telecommunications Standardization Sector;	7/22/2000	Gary Sullivan

Nokia Exhibit 2014, p. 69
Snap/Hisense v. Nokia
IPR2025-01440

	STUDY GROUP 16; Video Coding Experts Group (Question 15); Post-Osaka Contribution for White Document Preparation		
H.263++ Annex U Draft (AnnU_LTPr9.doc)	ITU – Telecommunications Standardization Sector; STUDY GROUP 16; Video Coding Experts Group (Question 15); Post-Osaka Contribution for White Document Preparation	7/22/2000	Gary Sullivan
Post-Osaka Draft of Annex W in preparation for White Document submission (AnnW_PostOsaka_r0.doc)		7/13/2000	Gary Sullivan
Post-Osaka Draft of Annex W in preparation for White Document submission (AnnW_PostOsaka_r1.doc)		7/22/2000	Gary Sullivan
Draft for "H.263++" Annexes U, V, and W to Recommendation H.263 Rev. 1		11/2000	ITU-T
Draft for "H.263++" Annexes U, V, and W to Recommendation H.263 Rev. 2		11/2000	IT-T
Draft for "H.263++" Annexes U, V, and W to Recommendation H.263		11/2000	ITU-T
Issues in Multimedia Scaling: the MPEG Video Streams Case	Emerging Technologies and Applications in Communications, IEEE Computer Society	5/7/1996	Omar Elloumi
Dynamic Frame Skipping for High-Performance Transcoding	Proceedings 2001 International Conference on Image Processing (Cat. No.01CH37205)	10/2001	Kai-Tat Fung
Low-Complexity and High-Quality Frame Skipping Transcoder	The 2001 IEEE International Symposium on Circuits and Systems (Cat. No.01CH37196)	5/2001	Kai-Tat Fung
Annex O Usage in Error Prone Environments (Document:Q15-K-40)	ITU – Telecommunications Standardization Sector Study Group 16 Video Coding Experts Group (Question 15);	8/22/2000-8/25/2000	Miska Hannuksela

Nokia Exhibit 2014, p. 70
Snap/Hisense v. Nokia
IPR2025-01440

	11th Meeting: Portland, Oregon, USA		
New Annex W Functions for Error Resilience (Document: Q15-J-55)	ITU – Telecommunications Standardization Sector Study Group 16; Video Coding Experts Group (Question 15); 10th Meeting: Osaka, Japan	5/16/2000-5/19/2000	Miska Hannuksela
Spare Reference Pictures for H.263 IP Profile (Document: Q15-K-39)	ITU – Telecommunications Standardization Sector Study Group 16 Video Coding Experts Group 40 (Question 15); 11th Meeting: Portland, Oregon, USA	8/22/2000-8/25/2000	Miska Hannuksela
Proposed Amendments for Annex U: Enhanced Reference Picture Selection (Document: Q15-I-52)	ITU - Telecommunications Standardization Sector Study Group 16; Video Coding Experts Group (Question 15); 9th Meeting: Red Bank, New Jersey, 19-22 October, 1999	10/19/1999-10/22/1999	Michael Horowitz
Spatially Scalable Video Compression Employing Resolution Pyramids	IEEE Journal on Selected Areas in Communications, vol. 15, No. 9	12/1997	Klaus Illgner
ISO/IEC 13818-1 Information Technology Generic Coding of Moving Pictures and Associated Audio Information: Systems (2d. ed.)		12/1/2000	ISO/IEC
Draft Text of Recommendation H.263 Version 2 ("H.263+") for Decision		9/26/1997	ITU-T
H.26L Test Model Long Term No. 8 (TML-8) Draft0 (Document: VCEG-N10)	ITU - Telecommunications Standardization Sector; STUDY GROUP 16; Video Coding Experts Group (VCEG)	7/10/2001	Gisle Bjontegaard
Editor's Proposed Draft Text Modification for Joint Video Specification (ITU-T Rec. 264 ISO/IEC 14496-10 AVC) (Document: JVT-E146d137)	Joint Video Team (JVT) of ISO/IEC MPEG and ITU-T VCEG 5th Meeting: Geneva, Switzerland	11/17/2002	Thomas Wiegand
Virtual Editing of MPEG-2 Streams	IEEE Transactions on Consumer Electronics, Vol. 47. Issue 4	11/2001	Declan Kelly

Nokia Exhibit 2014, p. 71
Snap/Hisense v. Nokia
IPR2025-01440

International Standard ISO/IEC 13818-1 Information technology- Generic coding of moving pictures and associated audio information: Systems (2d ed.)			ISO/IEC
H.262 - International Standard ISO/IEC 13818-2 Information technology – Generic coding of moving pictures and associated audio information: Video (2d ed.)		2/2000	ITU-T
Proposed Amendment for Annex U: Enhanced Reference Picture Selection (UpartitionR4.doc)	https://www.itu.int/wftp3/av-arch/video-site/0002_Gen/	1/13/2000	ITU-T
Memory Traffic and Data Cache Behavior of an MPEG-2 Software Decoder	Proceedings International Conference on Computer Design VLSI in Computers and Processors	10/12/1997	Peter Soderquist
Draft Meeting Report of the Ninth Meeting (Meeting I) of the ITU-T Q.15/16 Advanced Video Coding Experts Group – Red Bank, New Jersey, 19-22 October, 1999 (Study Period 1997-2000) (Document: Q15-I-64d1)	ITU - Telecommunications Standardization Sector Study Group16; Video Coding Experts Group (Question 15); 9th Meeting: Red Bank, New Jersey	10/19/1999-10/22/1999	Gary Sullivan
Draft Submitted for Determination: H.263 Draft Annexes, U, V, and W	ITU – Telecommunications Standardization Sector Study Group 16	2/7/2000-2/15/2000	Sullivan, Gary
Meeting Report of the Tenth Meeting (Meeting J) of the ITU-T Q.15/16 Advanced Video Coding Experts Group – Osaka, Japan, 16-18 May, 2000 (Study Period 1997-2000) (Document: Q15-J-78d3)	ITU - Telecommunications Standardization Sector Study Group 16 Video Coding Experts Group (Question 15); 10th Meeting: Osaka, Japan	5/16/2000-5/18/2000	Gary Sullivan
Meeting Report of the Tenth Meeting (Meeting J) of the ITU-T Q.15/16 Advanced	ITU - Telecommunications Standardization Sector Study Group 16 Video Coding	5/16/2000-5/18/2000	Gary Sullivan

Nokia Exhibit 2014, p. 72
Snap/Hisense v. Nokia
IPR2025-01440

Video Coding Experts Group – Osaka, Japan, 16-18 May, 2000 (Study Period 1997-2000) (Document: Q15-J-78d2)	Experts Group (Question 15); 9th Meeting: Osaka, Japan		
Temporal Scalability Using P-pictures for Low-latency Applications	1998 IEEE Second Workshop on Multimedia Signal Processing (Cat. No.98EX175)	12/7/1998	Stephan Wenger
Annex U including Picture Numbers (Document: Q15-J-66)	ITU – Telecommunications Standardization Sector Study Group 16; Video Coding Experts Group (Question 15); 11th Meeting: Osaka	5/16/2000-5/18/2000	Thomas Wiegand
Core Experiment Description for Enhanced Reference Picture Selection (Document: Q15-G-19)	ITU - Telecommunications Standardization Sector Study Group 16; Video Coding Experts Group (Question 15); 7th Meeting: Monterey CA, USA;	2/15/1999-2/19/1999	Thomas Wiegand
Core Experiment Description on Affine Motion Compensation (Document: Q15-I-42)	ITU - Telecommunications Standardization Sector Study Group 16; Video Coding Experts Group (Question 15); 9th Meeting: Red Bank, New Jersey	10/19/1999-10/22/1999	Thomas Wiegand
Core Experiment Description on Affine Motion Compensation (Document: Q15-H-34r1)	ITU - Telecommunications Standardization Sector Study Group 16; Video Coding Experts Group (Question 15); 8th Meeting: Berlin, Germany	8/3/1999-8/6/1999	Thomas Wiegand
Core Experiment Description on Affine Motion Compensation (Document: Q15-H-34)	ITU – Telecommunications Standardization Sector Study Group 16; Video Coding Experts Group (Question 15); 8th Meeting: Berlin, Germany	8/3/1999-8/6/1999	Thomas Wiegand
Core Experiment on Enhanced Reference Picture Selection (Document: Q15-E-52)	ITU - Telecommunications Standardization Sector Study Group 16; Video Coding Experts Group (Question 15); 5th Meeting: Whistler, British Columbia, CA,	7/21/1998-7/24/1998	Thomas Wiegand

Nokia Exhibit 2014, p. 73
Snap/Hisense v. Nokia
IPR2025-01440

Draft for Annex on Enhanced Reference Picture Selection (Document: Q15-F-32)	ITU - Telecommunications Standardization Sector Study Group 16; Video Coding Experts Group (Question 15); 6th Meeting: Seoul, Korea	11/3/1998-11/6/1998	Thomas Wiegand
Proposed Draft for Annex on Enhanced Reference Picture Selection (Document: Q15-F-32r1)	ITU - Telecommunications Standardization Sector Study Group 16; Video 42 Coding Experts Group (Question 15); 6th Meeting: Seoul, Korea, 3-6 November, 1998	11/3/1998-11/6/1998	Thomas Wiegand
Further Work on Affine Multi-Frame Motion Compensation (Document: Q15-H-21)	ITU - Telecommunications Standardization Sector Study Group 16; Video Coding Experts Group (Question 15); 8th Meeting: Berlin, Germany,	11/3/1999-11/6/1999	Thomas Wiegand
Proposed Draft for Annex U on Enhanced Reference Picture Selection (Document: Q15-G-18)	ITU - Telecommunications Standardization Sector Study Group 16; Video Coding Experts Group (Question 15); 7th Meeting: Monterey CA, USA;	11/15/1999-11/19/1999	Thomas Wiegand
Video Coding Using Long-Term Memory and Affine Motion-Compensated Prediction (Document: Q15-G-21)	ITU - Telecommunications Standardization Sector Study Group 16; Video Coding Experts Group (Question 15); 7th Meeting: February 15-19, 1999, Monterey CA, USA;	2/15/1999-2/19/1999	Thomas Wiegand
Video Coding Using Long-Term Memory and Affine Motion-Compensated Prediction (Document: Q15-F-33)	ITU - Telecommunications Standardization Sector Study Group 16; Video Coding Experts Group (Question 15); 6th Meeting: Seoul, Korea	11/3/1998-11/6/1998	Thomas Wiegand
H.26L Test Model Long-Term Number 9 (TML-9) draft0 (Document: VCEG-N83d1)	ITU - Telecommunications Standardization Sector Study Group 16 Video Coding Experts Group (VCEG)	12/21/2001	Thomas Wiegand
Joint Model Number 1 (JM-1) (Document: JVT-A003)	Joint Video Team (JVT) of ISO/IEC MPEG and ITU-T VCEG; Pattaya, Thailand	12/3/2001-12/7/2001	Thomas Wiegand
Modification of Annex U for Enhanced Error	ITU – Telecommunications Standardization Sector Study	5/16/2000-5/18/2000	Thomas Wiegand

Nokia Exhibit 2014, p. 74
Snap/Hisense v. Nokia
IPR2025-01440

Resilience (Document: Q15-J-33)	Group 16; Video Coding Experts Group (Question 15); 11th Meeting: Osaka, Japan, 16-18 May, 2000;		
Multiframe Buffering Syntax for H.26L (Document: Q15-I-45)	ITU – Telecommunications Standardization Sector Study Group 16; Video Coding Experts Group (Question 15); 9th Meeting: Red Bank, New Jersey	10/19/1999-10/22/1999	Thomas Wiegand
Proposed Changes to Annex U (Document: Q15-J-49)	ITU – Telecommunications Standardization Sector Study Group 16; Video Coding Experts Group (Question 15); 11th Meeting: Osaka, Japan, 16-18 May, 2000;	5/16/2000-5/18/2000	Thomas Wiegand
Proposed Changes to Draft for Annex U on Enhanced Reference Picture Selection (Document: Q15-I-44)	ITU – Telecommunications Standardization Sector Study Group 16; Video Coding Experts Group (Question 15); 8th Meeting: Berlin, Germany	8/3/1999-8/6/1999	Thomas Wiegand
Proposed Draft for Annex U on Enhanced Reference Picture Selection (Document: Q15-H-30)	ITU – Telecommunications Standardization Sector Study Group16; Video Coding Experts Group (Question 15); 8th Meeting: Berlin, Germany	8/3/1999	Thomas Wiegand
Report of AHG on incorporation of enhanced AnnexU/H.263 (Document: VCEG-O10)	ITU - Telecommunications Standardization Sector Study Group16 Video Coding Experts Group (VCEG)	12/6/2001	Thomas Wiegand
Report of AHG on incorporation of enhanced AnnexU/H.263 (Document: VCEG-O10r1)	ITU - Telecommunications Standardization Sector Study Group16 Video Coding Experts Group (VCEG)	12/6/2001	Thomas Wiegand
Efficient Selective Frame Discard Algorithms for Stored Video Delivery across Resource Constrained Networks	IEEE INFOCOM '99. Conference on Computer Communications. Proceedings. Eighteenth Annual Joint Conference of the IEEE Computer and Communications Societies. The Future is Now (Cat. No.99CH36320)	3/21/1999	Zhi-Li Zhang

Nokia Exhibit 2014, p. 75
Snap/Hisense v. Nokia
IPR2025-01440

Clean-up and improved design consistency for ABT (Document: JVT-E025)	Joint Video Team (JVT) of ISO/IEC MPEG & ITU-T VCEG; (ISO/IEC JTC1/SC29/WG11 and ITU-T SG16 Q.6); 5th Meeting: Geneva, CH	10/9/2002-10/17/2002	Mathias Wien
Editor's Proposed Draft Text Modifications for Joint Video Specification (ITU-T Rec. H.264 | ISO/IEC 14496-10 AVC), Draft 7 (JVT-E025_changes_to_JVT-E022d7)	Joint Video Team (JVT) of ISO/IEC MPEG and ITU-T VCEG 5th Meeting: Geneva, Switzerland	10/9/2002-10/17/2002	Thomas Wiegand

3. Prior Art Items and/or Knowledge

Respondents contend that the asserted claims are invalid under 35 U.S.C. §§ 102 and/or 103 based on prior art items embodying and alleged inventions or structures described in, and/or any knowledge disclosed by or referred to in, any of the prior art patents or prior art publications identified above in Sections V.A.1 and V.A.2. Because Respondents have not yet completed discovery in this case, Respondents reserve the right to supplement this disclosure with facts, documents, or other information learned at a later point through third-party discovery or other further investigation.

4. Prior Art Under 35 U.S.C. §§ 102(f) and 102(g)

Because Respondents have not yet completed discovery in this case, including but not limited to taking depositions of the named inventors of the asserted patents, reviewing Nokia's productions, and seeking discovery of prior inventions by third parties, Respondents reserve the right to supplement this disclosure with facts, documents, or other information learned at a later point through discovery or other further investigation.

B. Anticipation and Obviousness

Respondents contend that the prior art references identified in Respondents' contentions anticipate or render obvious the asserted claims of the '134 patent. Respondents attach Exhibits B-1 to B-9, which provide exemplary disclosures showing how the prior art anticipates and/or renders obvious the asserted claims of the '134 patent.

Prior art that anticipate and/or render obvious the asserted claims of the '134 patent are cited and described in the claim charts attached hereto as Exhibits B-1 to B-9, each of which describes anticipation and/or obviousness of one or more claims of the asserted patents by prior art references. These claim charts provide citations to portions of the above references, illustrating how the prior art explicitly discloses every element of the asserted claims of the '134 patent. To the extent any element is not provided by an expressly enabling disclosure by the referenced prior art, all elements of the asserted claims of the '134 patent would still be the inherent result of putting into practice the systems and methods described by the prior art referenced herein, as set forth below.

Exhibit	Primary Reference
B-1	U.S. Patent No. 5,426,464 ("Casavant") (RESPNOKIA_00005892)
B-2	U.S. Patent No. 5,835,672 ("Yagasaki") (RESPNOKIA_00006380)
B-3	U.S. Patent Appl. Publication No. 2001/0036355 ("Kelly") (RESPNOKIA_00009263)
B-4	U.S. Patent No. 5,455,629 ("Sun") (RESPNOKIA_00005950)
B-5	U.S. Patent No. 7,103,669 ("Apostolopoulos") (RESPNOKIA_00007184)
B-6	U.S. Patent Appl. Publication No. 2002/0194354 ("Bolduc") (RESPNOKIA_00005705)
B-7	Fung, Kai-Tat et al., Dynamic Frame Skipping for High-Performance Transcoding, Centre for Multimedia Signal Processing, Dept. of Electronic and Information Engineering ("Fung I") (RESPNOKIA_00001854)
B-8	Fung, Kat-Tai et al., Low-Complexity and high-quality frame skipping transcoder, Centre for Multimedia Signal Processing,

Exhibit	Primary Reference
	Dept. of Electronic and Information Engineering ("Fung II") (RESPNOKIA_00001858)
B-9	ITU-T Recommendation H.264 ("H.264") (RESPNOKIA_00004940, RESPNOKIA_00005222)

In addition to the discussion above, and to the extent not anticipated, the asserted claims of the '134 patent are invalid under 35 U.S.C. § 103 as being obvious to a person having ordinary skill in the art of the relevant technology. Items of prior art that render obvious the asserted claims of the '134 patent are cited and described in the claim charts attached hereto as Exhibits B-1 to B-10. Respondents identify secondary references and obviousness combinations in Exhibit B-10. In the event a particular reference or combination of references identified in Exhibits B-1 to B-9 does not anticipate or render obvious one of the asserted claims of the '134 patent, the reference, alone or in combination with one or more of the references identified in those exhibits or in Exhibit B-10 renders the claim obvious. The identification of certain combinations of prior art does not exclude other combinations and is without prejudice to Respondents' right to rely on additional specific combinations as well as to detail and explain such combinations.

The U.S. Supreme Court in *KSR Int'l Co. v. Teleflex Inc.*, 127 S. Ct. 1727 (2007) emphasized that inventions arising from ordinary innovation, ordinary skill, or common sense should not be patentable. *Id*. at 1732, 1738, 1742-1743, 1746. A patent claim may be obvious if the combination of elements was obvious to try or if there existed at the time of the invention a known problem for which there was an obvious solution encompassed by the patent's claims. When a work is available in one field of endeavor, design incentives and other market forces can prompt variations of it, either in the same field or a different one. If a person of ordinary skill can implement a predictable variation, Section 103 likely bars its patentability. *Id*. at 1740. The Court stated that courts should "look to interrelated teachings of multiple patents; the effects of demands

known to the design community or present in the marketplace; and the background knowledge possessed by a person having ordinary skill in the art, all in order to determine whether there was an apparent reason to combine the known elements in the fashion claimed by the patent at issue." *Id*. at 1740-41. *KSR* does not mandate evidence of a motivation or suggestion to combine prior art references. *See TGIP, Inc. v. AT&T Corp*., 527 F. Supp. 2d 561, 580-81 (E.D. Tex. 2007). "[A] court can take account of the inferences and creative steps that a person of ordinary skill in the art would employ" to resolve the question of obviousness. *KSR*, 127 S. Ct. at 1741.

Based on all of these considerations, as further detailed in Exhibits B-1 to B-10, persons of ordinary skill in the art would have combined the teachings of the prior art references discussed and charted in those exhibits. The combinations of these references would have rendered obvious to one of ordinary skill in the art the subject matter of the asserted claims of the '134 patent. The references identified in Exhibits B-1 to B-10 are analogous prior art to the subject matter of the asserted claims of the '134 patent and, for at least the reasons set forth below, are properly combinable. Because these prior art references exist within a single field of art, particularly one in which individuals in the field often shared and/or collaborated on their work, it would have been obvious for a person of skill in the art to look from one piece of prior art to another in order to find any missing functionality they desired to implement. Therefore, these references provide interrelated teachings and one of ordinary skill would look to the concepts in any of these references when seeking to solve the problems purportedly addressed by the asserted patents.

Numerous prior art references, including those identified in the attached exhibits, reflect common knowledge and the state of the prior art before the earliest claimed effective filing date of the asserted patents. As it would be unduly burdensome to create detailed claim charts for all of the invalidating combinations, for at least the reasons described in these final invalidity

contentions, it would have been obvious to one of ordinary skill in the art to combine any of a number of prior art references, including any combination of those identified in the attached exhibits, to meet the limitations of the asserted claims of the ’134 patent. Respondents’ inclusion of exemplary combinations, in view of the factors and exemplary motivations to combine identified herein, does not preclude Respondents from identifying other invalidating combinations and/or motivations as appropriate.

No showing of a specific motivation to combine prior art is required to combine the references disclosed above and in the attached charts, because each combination of art would have no unexpected results, and at most would simply represent a known alternative to one of ordinary skill in the art. *See KSR*, 127 S. Ct. at 1739-40 (rejecting the Federal Circuit’s “rigid” application of the teaching, suggestion, or motivation to combine test, instead espousing an “expansive and flexible” approach). Indeed, the Supreme Court held that a person of ordinary skill in the art is “a person of ordinary creativity, not an automaton” and “in many cases a person of ordinary skill in the art will be able to fit the teachings of multiple patents together like pieces of a puzzle.” *Id*. at 1742. Nevertheless, in addition to the information contained herein, Respondents hereby identify additional motivations and reasons to combine the cited art.

Clear and logical rationale to combine any of the references identified above with others exists from the prior art references themselves, as well as from the interrelated teachings of other prior art references, common knowledge, common sense, predictability, expectations, industry trends, design incentives or need, market demand or pressure, market forces, obviousness to try, the existence and nature of a known need or problem, and/or knowledge possessed by a person of ordinary skill. In addition, it would have been obvious to combine the prior art references identified above because there were only a finite number of predictable solutions and/or because known work

Nokia Exhibit 2014, p. 80
Snap/Hisense v. Nokia
IPR2025-01440

in one field of endeavor prompts variations based on predictable design incentives and/or market forces either in the same field or a different one. In addition, the combinations of the prior art references identified above would have been obvious because the combinations represent the known potential options with a reasonable expectation of success. Therefore, various reasons to combine the disclosed references exist. Respondents reserve the right to rely on the knowledge of those skilled in the art, the testimony of expert witnesses, and/or other prior art, to show that it would have been obvious to include the allegedly missing limitation and to explain the motivation to combine the prior art elements.

In addition, it would have obvious to combine any of the prior art in Exhibits B-1 to B-10 because all of these references relate to systems and methods for encoding and decoding video data that use buffering techniques and address omissions from or discontinuities in the data.

1. Casavant in view of Oliver, Lyon and/or Ran

Casavant discloses: "Video signal compression apparatus includes a memory for storing two fields of image data and providing fields of image data separated by one frame intervals. Image data from corresponding fields of successive frames are subtracted to generate field differences. The field differences are accumulated over respective field intervals, and the sum is compared against a predetermined value. If a sum of differences over a field is less than the predetermined value, the most recent field is considered to be redundant and may be excised. After respective fields are excised, frames of video signal are composed from the remaining fields. The field types (e.g., odd or even) of the fields in the memory are determined, and the data is accessed from the respective fields in memory such that data from odd and even fields occupy odd and even lines in the composed frames respectively. Flags are associated with composed frames to indicate which fields contain data associated with excised fields, and which field of the composed frames should be displayed first." Casavant, Abstract. Casavant further discloses that "it relates to apparatus for

eliminating redundant fields of video signal (at an encoder) and restoring (at the decoder) fields of video signal that have been excised by an encoder." *Id.*, 1:10-13. Casavant also teaches inserting glasses associated with composed frames that contain data corresponding to excised redundant data in a coded video signal. Casavant, 2:19-22. Casavant also teaches incorporating flags into the compressed video data with the associated frames after the frames of video data are compressed. Casavant, 2:24-26, Figure 8. The receiver then examines the compressed signal and remove any field redundancy flags, decodes and decompresses video signal and load it into a display memory. *See* Casavant, 2:27-35.

A POSITA would have understood the buffer memories of Casavant (e.g., element 12 and 13 in Fig. 3) to have a limited capacity because the decoding process only requires storage of a limited number of frames of the entire video stream at a given time and that the most recent decoded pictures of input signal are stored because the field memories are specifically intended for temporarily holding decoded reference frames for motion compensation. A POSITA would have further known that the decoder's buffer must be synchronized with the encoder's buffer. Sliding window buffers and their benefits were well known. This is consistent with the '134 patent's description of sliding windowing. '134 patent, 19:61-64. "As the coding proceeds, the image frame buffering functions on the basis of the FIFO principle (First-In-First-Out)." *Id.*, 19:64-66. A sliding window buffer was a conventional process with known benefits that a POSITA would have applied to Casavant's disclosure.

Oliver discloses "A system and method for compensating for slight variances between a first rate at which a far end modem transmits a series of data frames to a near end modem and a second rate at which the near end modem requires reception of the series of data frames." Oliver, Abstract. Specifically, Oliver discloses a method of handling "data underrun" during decoding by

providing "filler frames" in place of missing frames in buffer memory. Oliver, Abstract, 2:45-63, 3:25-28, 3:45-49, 4:52-55. Data underrun occurs when a buffer is fed with data at a lower speed than the data is being read from the buffer. *See* Oliver, 2:45-51, 5:66-6:8. Oliver's method substitutes filler frames—which "have little or no impact on the system"—for frames expected in, but absent from, the decoder's buffer memory. Oliver, 4:55-56; *see also id*., 3:30-45.

Lyon teaches "ensur[ing] that any 'artificial' intermediate video frames…are identified as such and processed accordingly" so that such frames are "not treated in the same manner as a normal decoded frame." Lyon, 6, 11. Specifically, Lyon describes a "line interpolation" algorithm that converts the intermediate video frames between formats and explains that "since the line interpolation algorithm assumes both fields of the intermediate video frame to represent the same image, the application of this algorithm to a pair of fields which are adjacent only through the coincidence of editing, may produce visually disturbing artefacts." Lyon, 5-6.

Ran discloses "a communication system and protocol uses retransmission techniques for video transmission on mobile/wireless channels. The system partitions frames of a moving image into frame segments, and combines a sequence of frame segments to form a sub-sequence of the moving image. The sub-sequences are treated as separate images which are separately encoded and transmitted to a receiver and then are combined to reassemble the moving image. A sender transmits to the receiver data packets, each data packet representing all or part of a digital code for a frame segment. The receiver requests retransmission of data packets containing detectable errors, indicates in a status buffer which digital codes have been received and whether the digital codes are intra or inter codes, and displays a frame only after all required data packets have been received without detectable errors. The segmented frames limit occasional failures to accurately retransmit data to individual sub-sequences, so that the failure to accurately transmit data is compensated for

by subsequent transmission an intra coded digital code for a frame segment." Ran, Abstract. Specifically, Ran "relates…to coding, transmission, and display of video in telecommunication systems having bursty channel errors[,]" *i.e.*, high error rates. *See* Ran, 1:8-10. Figure 1 in Ran illustrates a communication system in an embodiment. Ran, 3:28-29, 4:15-16.

a) Motivation to Combine Casavant and Oliver

Casavant and Oliver are each in the same field of encoding and decoding of video signals. *See, e.g.*, Casavant at Abstract, 1:5-13, 2:27-35; Oliver at 2:45-63, 3:25-28, 3:45-49, 4:52-55. Both Casavant and Oliver recognize the problems associated with decoding involving removing duplication. Casavant at 2:27-35; Oliver at 2:52-63.

Oliver teaches a method of handling "data underrun" during decoding by providing "filler frames" in place of missing frames in buffer memory. A POSITA would have recognized a need for the filler frames of Oliver in Casavant's system because Casavant's decoder may receive video data with missing frames due to distortion through transmission, i.e., a picture that has been "eliminated in the coding process" and thus does not exist at the decoder. *See* Casavant, 6:60-7:46, Figure 6.

A POSITA would have understood that encountering a missing frame without processing scheme during the decoding process could compromise the stability, security, and performance of Casavant's system. For example, the decoding process could crash or terminate unexpectedly. Alternatively, the decoding process might continue to run, but it may produce incorrect results, exhibit erratic behavior, or cause data corruption. In predictive video coding, frames are often predicted based on previous frames. A frame incorrectly reconstructed due to a missing reference frame can propagate to subsequent frames that are predicted from it, amplifying distortion in the video and degrading the viewing experience. A POSITA would have understood that filler frames, as taught in Oliver, were a known solution to this problem.

Oliver's controller 24 provides a filler frame in place of a frame that does not exist in frame buffers 32. Oliver, 3:32-36, 8:45-55. In the context of an audio application, Oliver explains that the filler frame can be "[a] 'quiet frame'…in which sound is essentially absent," i.e., "a frame in which the volume parameter…has been assigned a zero value." Oliver, 7:53-60, 7:61-63. In Oliver's video application embodiment (Oliver, 4:47-52, 9:31-32), a POSITA would have understood that a filler frame could similarly be generated by assigning all pixel values of the frame to the same value, the choice of which would dictate the color of the frame. For example, the system could easily generate a monochromatic, neutrally colored frame that maintains visual continuity without introducing distracting elements.

Implementing the above functionality of controller 24 of Oliver in Casavant's decoder would ensure that if coding apparatus 840 erroneously associates a skipped picture with a reference picture code, a filler frame would be provided in lieu of the skipped picture during the decoding process. A POSITA would have been motivated to make this combination to mitigate errors during decoding. In the proposed combination, Oliver's filler frame would be stored in field memories 1207 through 1210 and provided to the output video signal in the same manner as Casavant's output compressed video signal.

b) Motivation to Combine Casavant, Oliver, and Lyon

As discussed above, Oliver renders obvious, in its video embodiment, use of a filler frame in which all pixel values have been assigned the same value, i.e., a frame that does not belong to the original video sequence. *See* Oliver, 4:47-52, 7:53-60, 7:61-63, 9:31-32. A POSITA would have known that using a frame that does not belong to the original video sequence as a reference frame to predictively code other frames could cause visual distortions and decrease video quality. A POSITA would therefore have been motivated to ensure that filler frames are not used as reference frames for other frames in the proposed combination.

Lyon provides a solution to this problem, Lyon teaches "ensur[ing] that any 'artificial' intermediate video frames…are identified as such and processed accordingly" so that such frames are "not treated in the same manner as a normal decoded frame." Lyon, 6, 11. Specifically, Lyon describes a "line interpolation" algorithm that converts the intermediate video frames between formats and explains that "since the line interpolation algorithm assumes both fields of the intermediate video frame to represent the same image, the application of this algorithm to a pair of fields which are adjacent only through the coincidence of editing, may produce visually disturbing artefacts." Lyon, 5-6. A POSITA would have recognized that using filler frames that do not belong to the original video sequence as reference frames would similarly produce "visually disturbing artefacts" in the predicted frames because motion prediction, like the line interpolation algorithm described in Lyon, relies on the assumption that adjacent frames represent continuous motion. A POSITA would have thus been motivated to identify the filler frames in the Casavant-Oliver system because the filler frames, like the artificial frames in Lyon, should "not [be] treated in the same manner as a normal decoded frame" because they are not part of the original video sequence and therefore do not carry meaningful video information for purposes of performing motion prediction. Lyon, 11.

Lyon thus supplements and is entirely consistent with the disclosure in Oliver, and a POSITA would have found it obvious to incorporate Lyon's teaching of identifying artificial video frames into the Casavant-Oliver system. Like Casavant and Oliver, Lyon is directed to coding/decoding of video data. Lyon, 1-2; Casavant, Abstract, 1:6-14; Oliver, 4:47-52, 9:31-32; KSR, 550 U.S. at 418. The relied-on teaching of Lyon would operate the same in the combined system as it does alone by indicating to the decoder when a frame does not belong to the original video sequence and should not be used for subsequent processing. Lyon, 5-6, 11.

Lyon provides an express motivation that would have led a POSITA to modify the Casavant-Oliver system: avoiding the "visually disturbing artefacts" that result from the inclusion of inappropriate frames. Lyon, 6. As discussed for claim 5, it would have been obvious in the Casavant-Oliver combination to store the filler frames in field memories 1207 through 1210 and provide them via selector 1206 as pictures of the output video signal in the same manner as Casavant's decomposed signal. Because the filler frames would be stored in field memories 1207 through 1210 along with reference pictures used for motion prediction, a POSITA would have recognized that a filler frame may erroneously be used as a reference picture for motion prediction. Differentiating filler frames from video sequence frames would allow the decoder to ensure filler frames are not "treated in the same manner as a normal decoded frame," resulting in a higher quality video signal. See Lyon, 11. A POSITA would have understood that incorporating Lyon's teaching would realize this benefit in the Casavant-Oliver system because the line interpolation algorithm described in Lyon is analogous to the motion prediction used in the Casavant-Oliver combination and therefore the same type of "visually disturbing artefacts" that are avoided in Lyon would also be avoided in the combined system. *See* Lyon, 5-6, 11; Casavant, 1:16-2:35; Oliver, 4:47-52, 9:31-32.

A POSITA would have had a reasonable expectation of success in making the proposed combination. As previously discussed, Casavant teaches the use of field redundancy flags to designate duplicate of pictures in the coded video signal, for example, reference pictures and skip-pictures. *See* Casavant, 2:27-35. Modifying the Casavant-Oliver combination to identify filler frames in the same manner would have been a trivial modification within the skill of a POSITA at the relevant time.

c) Motivation to Combine Casavant and Ran

Nokia Exhibit 2014, p. 87
Snap/Hisense v. Nokia
IPR2025-01440

Ran teaches sending a request for retransmission of a reference picture upon detection that the reference picture is missing at the decoder. Ran, 3:46-48, 7:59-8:9; 9:58-10:46. Casavant's system, on the other hand, relies on flags in the decoder but does not account for the possibility of a missing frame/data, e.g., lost during transmission to the decoder. *See* Casavant, 2:27-35.

A POSITA would have understood the necessity of handling transmission errors in Casavant's system. Accordingly, a POSITA would have been motivated to combine Ran's solution of requesting retransmission of reference pictures missing at the decoder with the system of Casavant because such teachings would have improved Casavant's system by making it more error resilient. Specifically, Ran's teachings would have permitted Casavant's decoder to attempt proper decoding even when a frame is missing.

Ran's retransmission technique mirrors the '134 patent's description of initiating "error correction actions" during the decoding process when "a reference to an image number is detected which is then found to indicate a filler frame located in the buffer." 20:51-53. Filler frames, the '134 patent explains, "correspond[] to…missing image numbers," i.e., reference images that are missing from the buffer. 20:35-42. The error correction action can include "asking the encoder to re-transmit the reference image in question." 20:51-56. Put simply, the '134 patent's "error correction action[]" involves requesting re-transmission of a reference image when the reference image is missing from the decoder's buffer memory—which is precisely what Ran teaches. *See* Ran, 3:3-9, 6:3-32, 9:58-10:46.

Ran provides an express teaching, suggestion, and motivation that would have led a POSITA to incorporate its teachings into Casavant's system. Ran explains that "errors in video data…result in video displayed with flawed areas containing incorrect colors and/or intensities[, which] can be very noticeable and distracting." Ran, 2:3-6. Ran notes further that such errors are

especially problematic in "video compression processes [that] use…'inter' coding"—like Casavant's system (Casavant, 6:60-7:46, Figure 6)—because "new inter coded data builds new frames on frames containing flaws, and the receiver may preserve and repeat flaws caused by an uncorrectable error." Ran, 2:7-17. Ran's retransmission technique "eliminates the flawed areas…and permits use of inter coding." Ran, 2:21-22. A POSITA would have recognized that incorporating Ran's retransmission technique into Casavant's system would have yielded the expected, predictable result of improved inter coding.

A POSITA would have recognized that the Casavant-Ran combination would have amounted to no more than applying a known technique (Ran's retransmission technique for requesting missing reference frames) to a known device ready for improvement (Casavant's decoder) to yield predictable results (decoder having increased resilience to transmission errors). *KSR*, 550 U.S. at 417.

A POSITA would have had a reasonable expectation of success in combining the retransmission technique of Ran with Casavant's decoding apparatus. Ran explains that its retransmission technique "can be implemented using a digital signal processor (DSP) which executes decoding and encoding software" or as "software executed by the main CPU of [a personal] computer." Ran, 11:33-52. A POSITA would have recognized a DSP and software as conventional and known in the field. See KSR, 550 U.S. at 416-17, 421; Leapfrog Enters., Inc. v. Fisher-Price, Inc., 485 F.3d 1157, 1162 (Fed. Cir. 2007) (obvious to combine prior art with "technology that is commonly available and understood in the art"). Thus, a POSITA would have found it simple to implement the retransmission technique of Ran in the system of Casavant.

2. Yagasaki in view of Oliver, Lyon and Ran

Yagasaki discloses an "apparatus for coding and decoding a digital video" in which "duplicate pictures are eliminated from the input video signal to provide an encoder input signal."

Yagasaki, Title, Abstract. Yagasaki further discloses a "skip-picture flag" that is included in a coded signal in lieu of each eliminated duplicate picture, and a reference picture code identifying a field to be copied to provide each eliminated duplicate picture is also included in the coded signal. *Id.*, Abstract. Yagasaki further discloses, for example, that during the decoding process, "the variable-length decoder 1202 also extracts the reference picture code RFD and the skip picture flag SPD which, when it indicates a skip picture, causes the Selector 1206 to provide the picture indicated by the reference picture code as a picture of the decoder output signal VO1." *Id.*, 15:7-10. Yagasaki teaches including a "skip-picture flag" in a coded video signal to indicate a picture that has been intentionally eliminated from the coded video signal. Yagasaki, Abstract, 3:18-35, 3:54-67, 4:8-15, 4:30-41, 4:61-5:16, 5:45-64, 11:37-40, 15:12-67, 18:25-32, Figures 15-16, claims 1-2, 9-12. Yagasaki also teaches eliminating a picture from the coded signal to prevent it from being "used as a reference frame for predicting other pictures." Yagasaki, 21:50-55,11:61-63, Figure 8. The decoder replaces the eliminated picture with a picture retrieved from a buffer memory: field memories 1207 through 1210. *See* Yagasaki, 14:54-15:67, Figures 14-16.

A POSITA would have further understood that the elimination of a skip picture by the encoder results in a discontinuity in the sequence of temporal_reference codes. As Yagasaki explains, a temporal_reference code is generated "for each consecutive picture in the coder input signal VI," i.e., for each picture in the video signal that is provided as the initial input to coding apparatus 840. Yagasaki, 19:18-26. Yagasaki explains that skip pictures are eliminated during "the predictive coding step." Yagasaki, claim 1 ("wherein the predictive coding step includes eliminating…fields from the input video signal"), claims 3-6. Because temporal_reference codes are associated with each picture in the input video signal before skip pictures are eliminated, each skipped picture corresponds to a "discontinuity" in the temporal_reference numbering.

A POSITA would have understood the field memories 1207 through 1210 of Yagasaki to have a limited capacity because the decoding process only requires storage of a limited number of frames of the entire video stream at a given time and that the most recent decoded pictures of input signal are stored because the field memories are specifically intended for temporarily holding decoded reference frames for motion compensation. A POSITA would have further known that the decoder's buffer must be synchronized with the encoder's buffer. Sliding window buffers and their benefits were well known. This is consistent with the '134 patent's description of sliding windowing. '134 patent, 19:61-64. "As the coding proceeds, the image frame buffering functions on the basis of the FIFO principle (First-In-First-Out)." *Id.*, 19:64-66. A sliding window buffer was a conventional process with known benefits that a POSITA would have applied to Yagasaki's disclosure.

Oliver discloses "A system and method for compensating for slight variances between a first rate at which a far end modem transmits a series of data frames to a near end modem and a second rate at which the near end modem requires reception of the series of data frames." Oliver, Abstract. Specifically, Oliver relates to a method of handling "data underrun" during decoding by providing "filler frames" in place of missing frames in buffer memory. Oliver, Abstract, 2:45-63, 3:25-28, 3:45-49, 4:52-55. Data underrun occurs when a buffer is fed with data at a lower speed than the data is being read from the buffer. *See* Oliver, 2:45-51, 5:66-6:8. Oliver's method substitutes filler frames—which "have little or no impact on the system"—for frames expected in, but absent from, the decoder's buffer memory. Oliver, 4:55-56; *see also id.*, 3:30-45.

Lyon teaches "ensur[ing] that any 'artificial' intermediate video frames…are identified as such and processed accordingly" so that such frames are "not treated in the same manner as a normal decoded frame." Lyon, 6, 11. Specifically, Lyon describes a "line interpolation" algorithm

that converts the intermediate video frames between formats and explains that "since the line interpolation algorithm assumes both fields of the intermediate video frame to represent the same image, the application of this algorithm to a pair of fields which are adjacent only through the coincidence of editing, may produce visually disturbing artefacts." Lyon, 5-6. A POSITA would have recognized that using filler frames that do not belong to the original video sequence as reference frames would similarly produce "visually disturbing artefacts" in the predicted frames because motion prediction, like the line interpolation algorithm described in Lyon, relies on the assumption that adjacent frames represent continuous motion.

Ran discloses "a communication system and protocol uses retransmission techniques for video transmission on mobile/wireless channels. The system partitions frames of a moving image into frame segments, and combines a sequence of frame segments to form a sub-sequence of the moving image. The sub-sequences are treated as separate images which are separately encoded and transmitted to a receiver and then are combined to reassemble the moving image. A sender transmits to the receiver data packets, each data packet representing all or part of a digital code for a frame segment. The receiver requests retransmission of data packets containing detectable errors, indicates in a status buffer which digital codes have been received and whether the digital codes are intra or inter codes, and displays a frame only after all required data packets have been received without detectable errors. The segmented frames limit occasional failures to accurately retransmit data to individual sub-sequences, so that the failure to accurately transmit data is compensated for by subsequent transmission an intra coded digital code for a frame segment." Ran, Abstract. Specifically, Ran "relates…to coding, transmission, and display of video in telecommunication systems having bursty channel errors[,]" *i.e.*, high error rates. *See* Ran, 1:8-10. Figure 1 in Ran illustrates a communication system in an embodiment. Ran, 3:28-29, 4:15-16.

Nokia Exhibit 2014, p. 92
Snap/Hisense v. Nokia
IPR2025-01440

Respondents further incorporate by reference the petition for *inter partes* review of U.S. Patent No. 8,204,134, IPR2024-00725.

a) Motivation to Combine Yagasaki and Oliver

Yagasaki and Oliver are each in the same field of encoding and decoding of video signals. (*See*, e.g., Yagasaki, at Abstract, 1:8-12, 5:38-65; Oliver at 2:45-63, 3:25-28, 3:45-49, 4:52-55. Both Yagasaki and Oliver recognize the problems associated with decoding involving distortion or duplication. Yagasaki at 1:8-12; Oliver at 2:52-63.

Oliver teaches a method of handling "data underrun" during decoding by providing "filler frames" in place of missing frames in buffer memory. A POSITA would have recognized a need for the filler frames of Oliver in Yagasaki's system because Yagasaki's reference picture code can itself point to a skipped picture, i.e., a picture that has been "eliminated in the coding process" and thus does not exist at the decoder. *See* Yagasaki, 15:17-29, 18:4-37, Figure 18. In this scenario, Yagasaki outputs the reference picture indicated for the skipped picture. Yagasaki, 15:24-29. However, Yagasaki does not specify how this operation is performed within field memories 1207 through 1210.

A POSITA would have understood that attempting to access a nonexistent reference picture during the decoding process could compromise the stability, security, and performance of Yagasaki's system. For example, the decoding process could crash or terminate unexpectedly. Alternatively, the decoding process might continue to run, but it may produce incorrect results, exhibit erratic behavior, or cause data corruption. In predictive video coding, frames are often predicted based on previous frames. A frame incorrectly reconstructed due to a missing reference frame can propagate to subsequent frames that are predicted from it, amplifying distortion in the video and degrading the viewing experience. A POSITA would have understood that filler frames, as taught in Oliver, were a known solution to this problem.

Oliver's controller 24 provides a filler frame in place of a frame that does not exist in frame buffers 32. Oliver, 3:32-36, 8:45-55. In the context of an audio application, Oliver explains that the filler frame can be "[a] 'quiet frame'…in which sound is essentially absent," i.e., "a frame in which the volume parameter…has been assigned a zero value." Oliver, 7:53-60, 7:61-63. In Oliver's video application embodiment (Oliver, 4:47-52, 9:31-32), a POSITA would have understood that a filler frame could similarly be generated by assigning all pixel values of the frame to the same value, the choice of which would dictate the color of the frame. For example, the system could easily generate a monochromatic, neutrally colored frame that maintains visual continuity without introducing distracting elements.

Implementing the above functionality of controller 24 of Oliver in Yagasaki's decoder 843 would ensure that if coding apparatus 840 erroneously associates a skipped picture with a reference picture code, a filler frame would be provided in lieu of the skipped picture during the decoding process. A POSITA would have been motivated to make this combination to mitigate errors during decoding. In the proposed combination, Oliver's filler frame would be stored in field memories 1207 through 1210 and provided to the output video signal in the same manner as Yagasaki's reference pictures.

A POSITA would have found it obvious to incorporate Oliver's method of swapping a filler frame for a nonexistent buffer frame into Yagasaki's decoder 843. A POSITA would have first recognized that Yagasaki and Oliver are combinable because both are directed to coding/decoding of data frames (e.g., in video). Yagasaki, Abstract, 1:8-12; Oliver, 4:47-52, 9:31-32. A POSITA would have further recognized that the combination merely uses a known technique (implementing buffer memory management in a decoder using filler frames, as taught by Oliver) to improve a similar known device (Yagasaki's decoder 843) in the same way (providing buffered

Nokia Exhibit 2014, p. 94
Snap/Hisense v. Nokia
IPR2025-01440

frames as pictures of the output signal). A POSITA would have also recognized that the proposed combination applies a known technique (Oliver's use of filler frames for decoder buffer memory management) to a known device ready for improvement (Yagasaki's decoder 843) to yield predictable results (a decoder buffer memory having increased error resilience). Finally, a POSITA would have had a reasonable expectation of success in making the combination.

b) Motivation to Combine Yagasaki, Oliver and Lyon

As discussed for claim 5, Oliver renders obvious, in its video embodiment, use of a filler frame in which all pixel values have been assigned the same value, i.e., a frame that does not belong to the original video sequence. *See* Oliver, 4:47-52, 7:53-60, 7:61-63, 9:31-32. A POSITA would have known that using a frame that does not belong to the original video sequence as a reference frame to predictively code other frames could cause visual distortions and decrease video quality. A POSITA would therefore have been motivated to ensure that filler frames are not used as reference frames for other frames in the proposed combination.

Lyon provides a solution to this problem, Lyon teaches "ensur[ing] that any 'artificial' intermediate video frames…are identified as such and processed accordingly" so that such frames are "not treated in the same manner as a normal decoded frame." Lyon, 6, 11. Specifically, Lyon describes a "line interpolation" algorithm that converts the intermediate video frames between formats and explains that "since the line interpolation algorithm assumes both fields of the intermediate video frame to represent the same image, the application of this algorithm to a pair of fields which are adjacent only through the coincidence of editing, may produce visually disturbing artefacts." Lyon, 5-6. A POSITA would have recognized that using filler frames that do not belong to the original video sequence as reference frames would similarly produce "visually disturbing artefacts" in the predicted frames because motion prediction, like the line interpolation algorithm described in Lyon, relies on the assumption that adjacent frames represent continuous

motion. A POSITA would have thus been motivated to identify the filler frames in the Yagasaki-Oliver system because the filler frames, like the artificial frames in Lyon, should "not [be] treated in the same manner as a normal decoded frame" because they are not part of the original video sequence and therefore do not carry meaningful video information for purposes of performing motion prediction. Lyon, 11.

Lyon thus supplements and is entirely consistent with the disclosure in Oliver, and a POSITA would have found it obvious to incorporate Lyon's teaching of identifying artificial video frames into the Yagasaki-Oliver system. Like Yagasaki and Oliver, Lyon is directed to coding/decoding of video data. Lyon, 1-2; Yagasaki, Abstract, 1:8-12; Oliver, 4:47-52, 9:31-32; *KSR*, 550 U.S. at 418. The relied-on teaching of Lyon would operate the same in the combined system as it does alone by indicating to the decoder when a frame does not belong to the original video sequence and should not be used for subsequent processing. Lyon, 5-6, 11.

Lyon provides an express motivation that would have led a POSITA to modify the Yagasaki-Oliver system: avoiding the "visually disturbing artefacts" that result from the inclusion of inappropriate frames. Lyon, 6. As discussed for claim 5, it would have been obvious in the Yagasaki-Oliver combination to store the filler frames in field memories 1207 through 1210 and provide them via selector 1206 as pictures of the output video signal in the same manner as Yagasaki's reference pictures. Because the filler frames would be stored in field memories 1207 through 1210 along with reference pictures used for motion prediction, a POSITA would have recognized that a filler frame may erroneously be used as a reference picture for motion prediction. Differentiating filler frames from video sequence frames would allow the decoder to ensure filler frames are not "treated in the same manner as a normal decoded frame," resulting in a higher quality video signal. *See* Lyon, 11. A POSITA would have understood that incorporating Lyon's

teaching would realize this benefit in the Yagasaki-Oliver system because the line interpolation algorithm described in Lyon is analogous to the motion prediction used in the Yagasaki-Oliver combination and therefore the same type of "visually disturbing artefacts" that are avoided in Lyon would also be avoided in the combined system. *See* Lyon, 5-6, 11; Yagasaki, 1:15-55, 12:6-33; Oliver, 4:47-52, 9:31-32. A POSITA would have further understood that the filler frames could easily be identified using the same types of identifiers that Yagasaki already uses to designate different types of pictures in the coded video signal such as reference pictures and skip-pictures. *See* Yagasaki, 18:28-32.

A POSITA would have had a reasonable expectation of success in making the proposed combination. As previously discussed, Yagasaki teaches the use of identifiers to designate different types of pictures in the coded video signal, for example, reference pictures and skip-pictures. *See* Yagasaki, 18:28-32. Modifying the Yagasaki-Oliver combination to identify filler frames in the same manner would have been a trivial modification within the skill of a POSITA at the relevant time.

c) Motivation to Combine Yagasaki and Ran

A POSITA would have understood the necessity of handling transmission errors in Yagasaki's system. Accordingly, a POSITA would have been motivated to combine Ran's solution of requesting retransmission of reference pictures missing at the decoder with the system of Yagasaki because such teachings would have improved Yagasaki's system by making it more error resilient. Specifically, Ran's teachings would have permitted Yagasaki's decoder 843 to attempt proper decoding even when a reference picture is missing.

Ran's retransmission technique mirrors the '134 patent's description of initiating "error correction actions" during the decoding process when "a reference to an image number is detected which is then found to indicate a filler frame located in the buffer." 20:51-53. Filler frames, the

’134 patent explains, “correspond[] to…missing image numbers,” i.e., reference images that are missing from the buffer. 20:35-42. The error correction action can include “asking the encoder to re-transmit the reference image in question.” 20:51-56. Put simply, the ’134 patent’s “error correction action[]” involves requesting re-transmission of a reference image when the reference image is missing from the decoder’s buffer memory—which is precisely what Ran teaches. See Ran, 3:3-9, 6:3-32, 9:58-10:46.

Ran provides an express teaching, suggestion, and motivation that would have led a POSITA to incorporate its teachings into Yagasaki’s system. Ran explains that “errors in video data…result in video displayed with flawed areas containing incorrect colors and/or intensities[, which] can be very noticeable and distracting.” Ran, 2:3-6. Ran notes further that such errors are especially problematic in “video compression processes [that] use…‘inter’ coding”—like Yagasaki’s system (Yagasaki, 14:34-67, Figure 14)—because “new inter coded data builds new frames on frames containing flaws, and the receiver may preserve and repeat flaws caused by an uncorrectable error.” Ran, 2:7-17. Ran’s retransmission technique “eliminates the flawed areas…and permits use of inter coding.” Ran, 2:21-22. A POSITA would have recognized that incorporating Ran’s retransmission technique into Yagasaki’s system would have yielded the expected, predictable result of improved inter coding.

A POSITA would have recognized that the Yagasaki-Ran combination would have amounted to no more than applying a known technique (Ran’s retransmission technique for requesting missing reference frames) to a known device ready for improvement (Yagasaki’s decoder 843) to yield predictable results (decoder having increased resilience to transmission errors). *KSR*, 550 U.S. at 417.

A POSITA would have had a reasonable expectation of success in combining the retransmission technique of Ran with Yagasaki's decoding apparatus 850. Ran explains that its retransmission technique "can be implemented using a digital signal processor (DSP) which executes decoding and encoding software" or as "software executed by the main CPU of [a personal] computer." Ran, 11:33-52. A POSITA would have recognized a DSP and software as conventional and known in the field. *See KSR*, 550 U.S. at 416-17, 421; *Leapfrog Enters., Inc. v. Fisher-Price, Inc.*, 485 F.3d 1157, 1162 (Fed. Cir. 2007) (obvious to combine prior art with "technology that is commonly available and understood in the art"). Thus, a POSITA would have found it simple to implement the retransmission technique of Ran in the system of Yagasaki.

3. Kelly in view of Lee

Kelly "relates to methods and apparatuses for the editing and subsequent playback of edited audio/video data." Kelly, [0001]. Kelly discloses, for example: "a data processing apparatus comprising means operable to read sequences of frame-based data from a storage device and to edit the same such that a first edit point in a first frame sequence is linked to a second edit point in a second sequence without violating constraints imposed by a predefined decoder, wherein each of the stored frame sequences comprises at least one series of transport packets, the transport packets of a given series including respective continuity counter values each related by predetermined continuity rules to the preceding one, the apparatus comprising means for calculating the magnitude of a discontinuity in continuity counter values resulting from the linking of said edit points, and means for generating a corresponding number of additional transport packets, each having its own continuity counter value, so as to define an edited sequence of transport packets linking said first and second edit points while complying with said constraints and continuity rules." *Id.* [0015]. Kelly further teaches and discloses bridge sequences as a sequence of data demultiplexed and recoded to ensure the stream meets buffering requirements.

Kelly at [0057]. Kelly further discloses that according to the MPEG specification, a buffer capacity parameter is defined to guarantee the stream conforming to the MPEG buffer model. Kelly at [0084]. Kelly also teaches multiple scenarios to ensure no buffer overflow or buffer underflow. Kelly at [0099]- [0108].

A POSITA would have understood the buffer systems of Kelly to have a limited capacity because the decoding process only requires storage of a limited number of frames of the entire video stream at a given time and that the most recent decoded pictures of input signal are stored because the field memories are specifically intended for temporarily holding decoded reference frames for motion compensation. *See* Kelly at [0083]-[0084]. A POSITA would have further known that the decoder's buffer must be synchronized with the encoder's buffer. Sliding window buffers and their benefits were well known. This is consistent with the '134 patent's description of sliding windowing. '134 patent, 19:61-64. "As the coding proceeds, the image frame buffering functions on the basis of the FIFO principle (First-In-First-Out)." *Id.*, 19:64-66. A sliding window buffer was a conventional process with known benefits that a POSITA would have applied to Kelly's disclosure.

A POSITA would have understood continuity counter CC in Kelly incrementing within a stream packet of Kelly applies to the image frame level because the continuity structure in video coding sequence is similar on the packet and frame level. For example, Kelly discloses "the continuity counter CC is a 4-bit field incrementing with each Transport Stream packet for a given PID" and "CC wraps around to 0 after its maximum value" to allow devices to detect the loss of packets in an error-prone channel. See Kelly at [0060]. A POSITA would have understood a similar field could be applied to the image frame level to wrap around to 0 after the maximum value to indicate the discontinuity issue. A POSITA would have further known the changing

pattern of CC indicates the discontinuity of numbering of packages can be quickly adopted in the image frames level, i.e., a similar indicator changing from the maximum value to 0 is the discontinuity of numbering of the image frames (beginning of a new image frame). Also, Kelly discloses that CC is a feature of "discontinuities deliberately introduced by editing." A POSITA would have applied as a known benefit to address the same issue on the image frame level in video coding.

Lee teaches a FIFO buffer for storing program stream data. Lee at Abstract, Fig. 5, 3:18-38. Lee further discloses that MPEG II system includes a transport stream buffer to store transport stream data if a transport stream is selected from streams received in an ambient with many errors. 3:18-38, 4:59-61.

a) Motivation to Combine Kelly and Lee:

Kelly and Lee are each in the same field of encoding and decoding of video signals. (See, e.g., Kelly, at Abstract, [0001]- [0002]; Lee at Abstract, 1:5-40. Both Kelly and Lee recognize the problems associated with decoding streams involving errors. Kelly at [0002], [0059]-[0060]; Lee at 3:18-37.

A POSITA would have understood that attempting to adopt the buffer scheme during the decoding process could compromise the stability, security, and performance of Kelly's system. For example, the decoding process in Kelly is constrained by the capacity of the buffering system. Accordingly, a buffer-storing program, such as FIFO or sliding window buffering, can be adopted to resolve the limitation of capability issues. A POSITA would have understood that buffering schemes, as taught in Lee, were a known solution to this problem.

In the context of the decoding application, Lee explains that the MPEG II system includes a FIFO buffer for storing program data synchronized to a clock signal in order of reception. Lee at 3:18-38. FIFO buffers 10 and 17 can store received PS data in an order of reception synchronized

to the control/clock signal. Lee at 6: 4-56, Fig. 3, In Lee's video application embodiment, a POSITA would have understood that a FIFO buffer or other similar buffer scheme could comply with the MPEG II system requirement. For example, the system could easily accomplish the decoding process under the buffer capacity constraints through adopting a FIFO buffer without introducing distracting elements.

Implementing the above functionality of controller 24 of Oliver in Kelly's decoder would ensure that the decoding process complies with the MPEG-2 specification. A POSITA would have been motivated to make this combination to implement the buffering system during decoding. In the proposed combination, Lee's buffering scheme would be adopted in Kelly's decoder STB (element 12 in FIG. 1) and conduct buffer process in the same manner as Kelly's reference pictures.

4. Sun

As another example, Sun relates to "concealing image data that is lost during signal transmission." Sun, 1:10-11. Sun describes an "apparatus in a digital video signal processing system for concealing errors which might occur in reproduced images due to image data lost during signal transmission. The system includes apparatus for detecting transmitted video data, generating error signals if errors are present in segments (transport blocks) of the received data, and excising segments having errors from the data stream. The received data is applied to a decoder/decompressor system which decodes and decompresses the transmitted video data according to a predetermined sequence and applies the decompressed video data to a memory (for subsequent display or recording, etc.). The decoder/decompressor is responsive to the error signals for replacing blocks of data in which errors occurred with substitute data." *Id.*, 5:35-48.

5. Apostolopoulos

As another example, Apostolopoulos relates to "reliable multimedia communication across lossy packet networks, and more particularly, to a video communication method and system

employing multiple state encoding and path diversity." Apostolopoulos, 1:7-11. The Apostolopoulos explains that the "path diversity transmission system explicitly sends different subsets of packets over different paths, as opposed to the prior art approaches where the packets proceed along a single path. By explicitly sending different subsets of packets over different paths, the path diversity transmission system enables the end-to-end video application to effectively see an average path behavior, which is referred to herein as path diversity. Generally, seeing this average path behavior provides better performance than seeing the behavior of any individual random path. The resulting path diversity provides the multiple state video decoder with an appropriate virtual channel to assist in recovering from lost packets." *Id.*, 3:63-4:8.

6. Bolduc

As another example, Bolduc relates to "viewing image data over a network, and in particular relates to viewing a clip of image frames on a viewing station connected to a network over which the image data is transmitted." Bolduc, [0004]. Specifically, Bolduc notes that "[d]ata compression can be used to minimise the difficulty of supplying media data over a network, whether that be a high speed specialised video data network, or the Internet. The particular problem that remains is one of predictability: one may choose a level of data compression that seems likely to result in a sustainable reception of the media data, but this is a fixed assumption, and network capacity will vary from second to second." *Id.*, [0009]. Accordingly, Bolduc describes displaying image data over a network from a frame source, where "said image data comprises a plurality of image frames, and has a frame rate from which may be inferred a due time for display of each frame in a sequence of frames in said image data; said frame source returns a frame in response to a frame request issued over said network, wherein said processing means is configured to play a clip by: displaying selected frames from said frame source, on said display means, at their due

Nokia Exhibit 2014, p. 103
Snap/Hisense v. Nokia
IPR2025-01440

time, and skipping frames in said frame sequence in response to an indication of the data transfer rate of said network." *Id.*, [0013].

7. Fung I and Fung II

As another example, Fung I and Fung II relate to "a process of converting a previously compressed video bitstream into a lower bit-rate bitstream" wherein "some incoming frames are dropped for the frame-rate conversion." Fung I, Abstract; Fung II, Abstract.

8. H.264

As another example: ITU-T Recommendation H.264 discloses a video coding standard and describes a hypothetical reference decoder and decoded picture buffer. H.264 (05/2003), i, 215, 219; H.264 (03/2005), I, 264, 268. H.264 further discloses a parameter that "specifies . . . the decoding process in case of an inferred gap between values of frame_num." H.264 (05/2003), 55; H.264 (03/2005), 67.

Respondents incorporate by reference prior art from the prosecution histories and background sections of the asserted patents. Respondents expect to rely on the testimony of one or more expert witnesses and documents referenced by those expert witnesses in support of these contentions and incorporate those forthcoming expert reports as if fully set forth herein.

Respondents contend that there are no secondary considerations of non-obviousness evidencing the validity of any of the asserted claims of the '134 patent. Secondary considerations of non-obviousness, also referred to as objective indicia of non-obviousness, "can include copying, long felt but unsolved need, failure of others, commercial success, unexpected results created by the claimed invention, unexpected properties of the claimed invention, licenses showing industry respect for the invention, awards or other industry praise for the invention, and skepticism of skilled artisans before the invention." *Power Integrations, Inc. v. Fairchild Semiconductor Int'l, Inc.*, 711 F.3d 1348, 1368 (Fed. Cir. 2013). "A nexus between the merits of the claimed invention

and evidence of secondary considerations is required in order for the evidence to be given substantial weight in an obviousness decision." *Ruiz v. A.B. Chance Co.*, 234 F.3d 654, 668 (Fed. Cir. 2000). Moreover, even if a nexus exists, secondary considerations of non-obviousness "simply cannot overcome [a] strong prima facie showing of obviousness." *Sundance, Inc. v. DeMonte Fabricating Ltd.*, 550 F.3d 1356, 1368 (Fed. Cir. 2008). Nokia has not established the existence of any objective indicia of non-obviousness or secondary considerations. Respondents reserve the right to supplement their contentions to respond to any such evidence should Nokia be permitted to raise them in the future. While discovery in this case is ongoing, and Respondents' investigation continues (which will include expert discovery), to the extent Nokia contends that one or more asserted claims of the '134 patent is not obvious based on secondary considerations recognized by relevant authority Respondents contend such allegations are without merit.

For example, Nokia has not identified any evidence of copying of the purported inventions of the asserted claims of the '134 patent. *See* Nokia's January 3, 2024, Objections and Responses to Respondents' First Set of Interrogatories (Nos. 1-27), Interrogatory No. 10. Similarly, Nokia has provided no evidence of any failure of others to realize any purported inventions of the asserted claims of the '134 patent, or any evidence of any long felt but unsolved need solved by the purported inventions of the asserted claims of the '134 patent. *Id.* To the contrary, the widespread availability of video codecs is contrary evidence of any long-felt need for the purported inventions of the asserted claims of the '134 patent.

Nokia also has not identified any evidence that the purported inventions of the asserted claims of the '134 patent have enjoyed any commercial success. *Id*. To the extent that Nokia claims that sales of any accused products constitutes commercial success, Nokia has not identified any evidence of any nexus between the claimed invention and such alleged commercial success.

Nokia Exhibit 2014, p. 105
Snap/Hisense v. Nokia
IPR2025-01440

Moreover, any commercial success of the accused products may be due to factors other than the merits of the claims, including non-patented features or functionalities, marketing efforts, or other financial or economic incentives related to the sale or distribution of the accused products. Nokia also has not provided evidence of unexpected results or unexpected properties in the purported inventions of the asserted claims of the ’134 patent. *Id.*

Nokia has not identified any evidence of industry respect for the purported inventions of the asserted claims of the ’134 patent, and also no evidence of any awards or other industry praise for any purported inventions of the asserted claims of the ’134 patent. *Id.* Nokia has not identified any evidence of any skepticism of skilled artisans prior to purported inventions of the asserted claims of the ’134 patent; to the contrary, the prior art identified herein establishes not only a lack of skepticism but an appreciation that the purported inventions of the asserted claims of the ’134 patent were known to those of skill in the art. Nokia has not identified any evidence of any failed attempts by others to resolve any of the alleged problems that were allegedly solved by any of the alleged inventions claimed in the asserted patents. *Id.* Nokia has not identified any evidence of any teaching away from any of the alleged inventions claimed in the asserted patents. *Id.* Rather, and as discussed above, there are multiple references anticipating and/or or rendering obvious the alleged inventions. Nokia has not identified any evidence of any long-felt but unresolved need for the alleged inventions claimed in the asserted patents. As described above, the asserted claims of the ’134 patent are anticipated and/or rendered obvious by multiple prior art references. To the extent there was ever a need for any of the alleged inventions, they were well known to those in the art.

If Nokia identifies any additional secondary considerations of non-obviousness, Respondents reserve the right to amend and/or supplement their contentions.

C. Other Invalidity Grounds

Respondents hereby identify grounds upon which the asserted claims are invalid for failure to meet the requirements of 35 U.S.C. §§ 112(a), 112(b), and 112(f). These contentions shall not be construed as an admission that any claim construction advanced by Respondents in this case is in any way inconsistent, flawed, or erroneous. Nor should these contentions prevent Respondents from advancing claim construction and/or non-infringement positions in lieu of, or in addition to, invalidity positions. Further, these contentions shall not be construed as an admission of or acquiescence to Nokia's purported construction of the claim language or of other positions advanced by Nokia during the course of this litigation. Respondents' Invalidity Contentions under 35 U.S.C. § 112 may depend, in part, on the Court's claim construction, as well as Nokia's alleged scope of the asserted claims. Consequently, Respondents identify only the issues under 35 U.S.C. § 112 of which they are presently aware.

9. 35 U.S.C. § 101 – Ineligible Subject Matter

Under 35 U.S.C. § 101, "[w]hoever invents or discovers any new and useful process, machine, manufacture, or composition of matter, or any new and useful improvement thereof, may obtain a patent therefor, subject to the conditions and requirements of [Title 35]." "This provision, however, contains longstanding judicial exceptions, which provide that laws of nature, natural phenomena, and abstract ideas are not eligible for patenting." *ChargePoint, Inc. v. SemaConnect, Inc.*, 920 F.3d 759, 765 (Fed. Cir. 2019). To determine if claims are patent eligible, the first step is to "determine whether the claims at issue are directed to one of those patent-ineligible concepts." *Alice Corp. v. CLS Bank Int'l*, 573 U.S. 208, 217 (2014). If so, the second step is to "search for an 'inventive concept'—*i.e.*, an element or combination of elements that is sufficient to ensure that the patent in practice amounts to significantly more than a patent upon the ineligible concept itself." *Id.* at 217–18 (internal quotation marks omitted).

Nokia Exhibit 2014, p. 107
Snap/Hisense v. Nokia
IPR2025-01440

The asserted claims of the ’134 patent are directed to an abstract idea under the first step of the two-step *Alice* analysis. Specifically, the claims are directed to the patent-ineligible abstract idea of replacing intentionally omitted image frames with other data.

The asserted claims of the ’134 patent also fail the second step of the *Alice* analysis because they do not recite an “inventive concept” capable of rendering the abstract idea into patent-eligible subject matter. The claims merely recite conventional functions performed by generic computing equipment, used in conventional ways. For example, the patent admits that it discloses “a general-purpose multimedia data streaming system . . . , the basic principles of which can be applied in connection with any telecommunications system.” ’134 patent, at 5:30-33. It also admits that the purported invention “can be applied in any video reproduction system, irrespective of how a video file that is to be decoded is downloaded and where it is downloaded from” and that the disclosed image frames can be encoded by “any known video encoder.” *Id.* at 21:24-26. “If a claim’s only ‘inventive concept’ is the application of an abstract idea using conventional and well-understood techniques, the claim has not been transformed into a patent-eligible application of an abstract idea.” *BSG Tech. LLC v. Buyseasons, Inc.*, 899 F.3d 1281, 1290–91 (Fed. Cir. 2018) (patent directed to “system and method for indexing data” directed to patent-ineligible abstract idea and lacked inventive concept).

10. 35 U.S.C. § 112(a) – Enablement and Written Description

To comply with the enablement requirement of 35 U.S.C. § 112(a), the patent specification must teach those skilled in the art how to make and use the full scope of the claimed invention without undue experimentation. *In re Wright*, 999 F.2d 1557, 1561 (Fed. Cir. 1993). Courts consider multiple factors to determine whether experimentation is undue, including: “(1) the quantity of experimentation necessary, (2) the amount of direction or guidance presented, (3) the presence or absence of working examples, (4) the nature of the invention, (5) the state of the prior

Nokia Exhibit 2014, p. 108
Snap/Hisense v. Nokia
IPR2025-01440

art, (6) the relative skill of those in the art, (7) the predictability or unpredictability of the art, and (8) the breadth of the claims." *In re Wands*, 858 F.2d 731. 737 (Fed. Cir. 1988).

To comply with the written description requirement of 35 U.S.C. § 112(a), the patent specification must describe an invention in sufficient detail that one skilled in the art can clearly conclude that the inventor invented the claimed invention. *Regents of the Univ. of Cal. v. Eli Lilly & Co.*, 119 F.3d 1559, 1566 (Fed. Cir. 1997). Further, to satisfy the written description requirement, the disclosure of the patent must "convey with reasonable clarity to those skilled in the art that, as of the filing date sought, [the inventor] was in possession of the invention." *Vas-Cath Inc. v. Mahurkar*, 935 F.2d 1555, 1563-64 (Fed. Cir. 1991). "An applicant demonstrates that he was in possession of the invention by describing the claimed invention with all of its limitations using such descriptive means as words, structures, figures, diagrams, and formulas that fully set forth the invention." *Lockwood v. Am. Airlines, Inc.*, 107 F.3d 1565, 1572 (Fed. Cir. 1997). "[T]he written description inquiry looks to the four corners of the specification to discern the extent to which the inventor(s) had possession of the invention as broadly claimed. The knowledge of ordinary artisans may be used to inform what is actually in the specification, but not to teach limitations that are not in the specification, even if those limitations would be rendered obvious by the disclosure in the specification." *Rivera v. Int'l Trade Comm'n*, 857 F.3d 1315, 1322-23 (Fed. Cir. 2017) (citations omitted). In other words, even if something reflects an obvious variation of the invention disclosed in the specification, the claims are invalid for lack of written description.

The asserted claims are invalid for failure to enable and/or provide a written description of the alleged invention as required by 35 U.S.C. § 112(a). A person skilled in the art would not be able to make and use the claimed inventions by reading the specification. For example, the '134 patent fails to sufficiently describe or enable at least the following limitations: "decod[e]/[ing]

Nokia Exhibit 2014, p. 109
Snap/Hisense v. Nokia
IPR2025-01440

from the compressed video sequence an indication informing an intentional discontinuity of numbering of the image frames"; "configure[e]/[ing], in response to the indication, the buffer memory to provide a number of image frames corresponding to at least one discontinuity in the numbering of the image frames"; "us[e]/[ing] the image frames in the buffer memory in the decoding process"; "including the image frames in the buffer memory in the decoding process"; "us[e]/[ing] the number of image frames in the buffer memory in place of image frames that do not exist at a decoder due to the at least one discontinuity in the numbering of the image frames"; "including the number of image frames in the buffer memory in place of image frames that do not exist at a decoder due to the at least one discontinuity in the numbering of the image frames"; "the number of image frames in the buffer memory are used in sliding window buffering of image frames"; "using the number of image frames in the buffer memory in sliding window buffering of image frames"; "continu[ing]/[e] the entering of the image frames comprised by the compressed video sequence into the buffer memory from a correct image frame number after the buffer memory has been configured to provide the number of image frames corresponding to the at least one discontinuity in the numbering of the image frames"; "enter[ing]/[] into the buffer memory a number of filler frames corresponding to the at least one discontinuity in the numbering of the image frames"; "[filler frames are designated]/[designating said filler frames] by an identifier indicating that the filler frames do not belong to the compressed video sequence"; "filler frames are designated by an identifier indicating that the filler frames do not belong to the compressed video sequence"; "configure[ing]/[e] the buffer memory to provide a number of image frames corresponding to the at least one discontinuity in the numbering of the image frames [is carried out] by memory indications, whereby no data is entered into the buffer memory"; and "detecting

Nokia Exhibit 2014, p. 110
Snap/Hisense v. Nokia
IPR2025-01440

an error in the compressed video sequence on a basis of a reference in the decoding process to an image frame corresponding to the at least one discontinuity in the numbering of image frames."

11. 35 U.S.C. § 112(b) – Indefiniteness

The claims of a patent must "particularly point out and distinctly claim the subject matter which the applicant regards as his invention." 35 U.S.C. § 112(b). A claim is invalid as indefinite if it is not sufficiently precise to permit a potential competitor to determine whether or not it is infringing. *Morton Int'l, Inc. v. Cardinal Chem. Co.*, 5 F.3d 1464, 1470 (Fed. Cir. 1993). Specifically, "a patent is invalid for indefiniteness if its claims, read in light of the specification delineating the patent, and the prosecution history, fail to inform, with reasonable certainty, those skilled in the art about the scope of the invention." *Nautilus, Inc. v. Biosig, Instruments, Inc.*, 572 U.S. 891, 901 (2014). Furthermore, when a claim includes a term of degree, the patent "must provide 'some standard of measuring that degree' such that the claim language provides 'enough certainty to one of skill in the art when read in context of the invention.'" *GE Lighting Solutions, LLC v. Lights of Am., Inc.*, 663 Fed. Appx. 938, 940 (Fed. Cir. 2016); *Interval Licensing LLC v. AOL, Inc.*, 766 F.3d 1364, 1370 (Fed. Cir. 2014). For terms of degree, "the patent must provide that additional information in the form of 'objective boundaries.'" *Id.* And the Federal Circuit's "case law is clear that the objective boundaries requirement applies to terms of degree." *Berkheimer v. HP Inc.*, 881 F.3d 1360, 1364 (Fed. Cir. 2018).

Under this standard, a person skilled in the art would not be able to determine the scope of the invention because of the indefiniteness of at least the following terms: "us[ing]/[e] the image frames in the buffer memory in the decoding process"; "including the image frames in the buffer memory in the decoding process."

Because neither Nokia nor Respondents have yet briefed claim construction issues, Respondents' contentions should not be seen as a suggestion that Respondents hereby limit their

claims of indefiniteness, lack of enablement, or lack of written description to the terms identified herein. The contentions do not represent Respondents' agreement or views as to the meaning of any claim term. The contentions also do not represent Respondents' agreement or views as to the definiteness, written description support for, or enablement of any claim not specifically identified herein. Respondents reserve the right to supplement or amend these disclosures and to identify additional and/or different claim terms for construction.

VI. UNENFORCEABILITY

A. Laches, Acquiescence, and Waiver

"All legal and equitable defenses may be presented in all cases." 19 U.S.C. § 1337(c). Laches exists where a complainant delayed filing suit for an unreasonable and inexcusable length of time after it knew or reasonably should have known of allegedly infringing activities and the delay resulted in material prejudice or injury to the respondents. *Certain Network Devices, Related Software and Components Thereof (I)*, Inv. No. 337-TA-944, Comm'n Op. at 26 (April 19, 2017) (post-*SCA Hygiene* decision declining to hold that laches is not a valid defense for Section 337 actions and addressing the defense on the merits). A presumption of laches exists with a six-year delay. *See A.C. Aukerman Co. v. R.L. Chaides Const. Co.*, 960 F. 3d 1029, 1035 (Fed. Cir. 1992) (*en banc*) *abrogated on other grounds by SCA Hygiene Prod. Aktiebolag v. First Quality Baby Prod., LLC*, 580 U.S. 328 (March 21, 2017) ("The presumption of laches arising from a more than six-year delay in filing suit is consonant with the mainstream of the law.") In the context of laches, the Federal Circuit has held that a delay of more than six years raises a "presumption that it is unreasonable, inexcusable, and prejudicial." *Wanlass v. Gen. Elec. Co.*, 138 F.3d 1334, 1337 (Fed. Cir. 1998). That presumption shifts the burden to the patentee. Acquiescence occurs where (1) with knowledge of the facts giving rise to the claim, (2) a complainant engages in implicit or explicit assurances to its opponent, and (3) the opponent relies thereon. *See Certain Color*

Nokia Exhibit 2014, p. 112
Snap/Hisense v. Nokia
IPR2025-01440

Intraoral Scanners & Related Hardware & Software, Inv. No. 337-TA-1091, Initial Determination (March 1, 2019). And waiver requires conduct that "was so inconsistent with an intent to enforce its rights as to induce a reasonable belief that such right has been relinquished." *Id*.

Amazon has been selling the Amazon Fire Tablets, formerly called the Kindle Fire since their first release in November 2011.[3] The first Fire TV product was made available in 2014.[4] The first Amazon Echo Show was released in 2017.[5] The Ring video doorbell and its related products have been sold since 2014.[6] And Blink has been selling security cameras since 2016.[7]. These releases, sales, and functionality have been high profile, open, and notorious. These dates range from more than six years to twelve years before Nokia filed the Complaint in this Investigation. Thus, the presumption of laches applies and shifts the burden to Nokia. Nokia in its Complaint alleges that "Nokia has been negotiating with Amazon in good faith to license various standard essential patent ("SEP") claims ***since 2009***. During this time, Amazon has sold millions of [allegedly] infringing products and offered services that [allegedly] infringe Nokia's patents to millions of subscribers." Complaint at ¶ 71. The Complaint then alleges that Amazon "increased its use of video technologies," and that Nokia specifically "notified Amazon that Amazon was infringing Nokia's H.264 Patents" in ***April 2015***—a claim for which Nokia provides no support. That was more than eight years before Nokia filed its Complaint. In that time, Nokia waited to bring suit after the growth of popularity of the products and widespread adoption of the H.264

---

[3] https://www.techotopia.com/index.php/An_Overview_and_History_of_the_Kindle_Fire
[4] Horn, Leslie (April 2, 2014). "Fire TV: Everything You Need to Know About Amazon's $100 Streaming Box". Gizmodo. Gawker Media, available at https://gizmodo.com/amazons-fire-tv-everything-you-need-to-know-1556889628.
[5] https://www.digitaltrends.com/home/history-of-amazon-echo/
[6] https://www.aboutamazon.com/news/devices/a-brief-history-of-the-ring-video-doorbell-and-its-evolution-over-the-last-10-years
[7] Heater, Brian (5 December 2016). "Blink's home security camera gets an outdoor version". TechCrunch available at https://techcrunch.com/2016/12/05/blink-xt/ .

standard. Many of the Amazon accused product lines created and grew their respective markets. And only after such widespread adoption and after the vast majority of relevant patents to the H.264 Standard held by others were licensed on reasonable terms, did Nokia begin with its unreasonable demands and worldwide litigation campaign against the Respondents, including seeking injunctions in foreign jurisdictions.[8], [9]

The course of negotiations between Nokia and Amazon also makes clear, that despite being in discussions, according to the Complaint, for six years on SEPs, Nokia did not raise the asserted patents, its H.264 portfolio, or indeed any video coding at all, actions inconsistent with an intent to enforce its rights as to induce a reasonable belief that such right has been relinquished, particularly as Nokia sold its mobile business to Microsoft in 2014 and Amazon ceased its sales of the Fire phone. Negotiations continued to focus on WiFi technology. Even after Nokia claims

---

[8] As to Amazon, Nokia has launched litigation in the U.S. District Courts for the District of Delaware and the Eastern District of Virginia, the United Kingdom, multiple proceedings in Germany, the Unified Patent Court, India, and Brazil. *See Nokia Technologies Oy v. Amazon.com, Inc. et al*, No. 1:23-cv-01236-GBW (D. Del.); *In re Nokia Technologies Oy and Alcatel Lucent SAS, No. 1:23-mc-0032 (E.D. Va.) (transferred to the District of Delaware)*; *Alcatel Lucent SAS v. Amazon Digital UK Ltd. et al*, No. HP-2023-000038; *Nokia Technologies Oy v. Amazon Europe Core S.à r.l. et. al*, 7 O 77/23 (Landgericht Mannheim); *Nokia Technologies Oy v. Amazon Europe Core S.à r.l. et. al*, 7 O 14174/23 (Landgericht Muenchen I) ; *Alcatel Lucent SAS v. Amazon Europe Core S.à r.l. et. al*, 7 O 13903/23 (Landgericht Muenchen I); *Alcatel Lucent SAS v. Amazon Europe Core S.à r.l. et. al*, 4c O 49/23 (Landgericht Duesseldorf) ; *Nokia Technologies Oy v. Amazon Europe Core S.à r.l. et. al*, 4c O 50/23 (Landgericht Duesseldorf) ; *Nokia Technologies Oy v. Amazon EU S.a.r.l.*, Case No. ACT_584119/2023 (Unified Patent Court); *Nokia Technologies Oy v. Amazon Seller Servs. Private Ltd. & Ors. et al*, I.A. No. 22003 of 2023 (High Court of Delhi at New Delhi); *Nokia Technologies Oy v. Amazon Servicios de Varejo do Brasil Ltda.* (Brazil); *In Re: Request from Germany) In Re: Nokia Technologies Oy*, No. 1:23-cv-01395 (D. Del.).

[9] As to HP, Nokia has launched litigation in the U.S. District Court of Delaware, multiple proceedings in Germany, the Unified Patent Court, and Brazil. *See, Nokia Corp. v. HP Inc.*, 1:23-cv-01237-GBW (D. Del); *Nokia Technologies Oy v. HP Brasil Industria E Comercio De Equipamentos El*, Case No. 0958559-14.2023.8.19.0001; *Nokia Technologies Oy v. HP Inc. et. al.*, Munich Regional Court I, 7 O 14901/23; *Nokia Technologies Oy v. HP Inc. et. al.*, Munich Regional Court I, 7 O 14902/23; *Nokia Technologies Oy v. HP Inc. et. al.*, UPC LD Munich, ACT_588466/2023.

Nokia Exhibit 2014, p. 114
Snap/Hisense v. Nokia
IPR2025-01440

to have notified Amazon of alleged infringement of its H.264 Patents, for which it provides no support, Nokia claims it did not offer a list of Video Patents for another five years. In other words, Nokia did not identify any H.264 Patents, let alone the Asserted Patents, for more than ten years after it purportedly started to negotiate with Amazon on its SEPs. *See* Complaint ¶ 75.

As to HP, it has been selling products that are capable of supporting the H.264 Standard for approximately 15 years. HP's release of its products is public and open. Indeed, HP's products are listed for sale on www.hp.com and consumers can purchase HP's products at retail stores such as Best Buy. Because HP's products that are capable of supporting H.264 have been offered for sale for approximately fifteen years before the filing of the complaint, the presumption of laches applies and shifts the burden to Nokia.

Respondents also incorporate by reference their unenforceability contentions as set forth in their Joint Responses to Contention Interrogatories regarding RAND/SEP Defendants and the Public Interest, including all supplementations, including with respect to waiver.

Nokia Exhibit 2014, p. 115
Snap/Hisense v. Nokia
IPR2025-01440

Dated: April 8, 2024

Respectfully submitted,

/s/ Robin L. Brewer
Veronica S. Ascarrunz
Perkins Coie LLP
700 13th Street, NW, Suite 800
Washington, DC 20005-3960
(202) 654-6200

Stefani E. Shanberg
Robin L. Brewer
Perkins Coie LLP
505 Howard Street, Suite 1000
San Francisco, CA 94105-3204
(415) 344-7000

Thomas N. Millikan
Perkins Coie LLP
11452 El Camino Real, Suite 300
San Diego, CA 92130-2080
(858) 720-5700

Stephen S. Korniczky
Martin R. Bader
Sheppard, Mullin, Richter & Hampton LLP
12275 El Camino Real, Suite 100
San Diego, CA 92130-4092
(858) 720-8900

Counsel for Respondents Amazon.com, Inc. and Amazon.com Services LLC

/s/ Stephanie L. Roberts
Eric S. Namrow
Stephanie L. Roberts
Kandis C. Gibson
Manu Bansal, Ph.D.
Kevin J. Spinella
Eunjean Je
Morgan, Lewis & Bockius LLP
1111 Pennsylvania Ave, N.W.
Washington, D.C. 20004-2541
Telephone: (202) 739-3000

Rick L. Rambo

Nokia Exhibit 2014, p. 116
Snap/Hisense v. Nokia
IPR2025-01440

David J. Levy
Thomas R. Davis
Morgan, Lewis & Bockius LLP
1000 Louisiana Street, Suite 4000
Houston, TX 77002-5005
Telephone: (713) 890-5000

Jason E. Gettleman
Corey R. Houmand
Morgan, Lewis & Bockius LLP
1400 Page Mill Road
Palo Alto, CA 94304
Telephone: (650) 843-4000

Counsel for Respondent HP Inc.

Nokia Exhibit 2014, p. 117
Snap/Hisense v. Nokia
IPR2025-01440

CERTIFICATE OF SERVICE

I hereby certify that a copy of **RESPONDENTS' JOINT DISCLOSURE OF FINAL INVALIDITY CONTENTIONS IN RESPONSE TO INDIVIDUAL INTERROGATORY NOS. 7-9** has been served on April 8, 2024, as indicated, on the following:

The Honorable Lisa R. Barton Secretary to the Commission U.S. International Trade Commission 500 E. Street, S.W., Room 112A Washington, DC 20436	☐ First Class Mail ☐ Overnight Delivery ☐ EDIS ☐ Email
Honorable Doris Johnson Hines Administrative Law Judge U.S. International Trade Commission 500 E Street, SW Washington, DC 20436 Pyong Yoon, Esq. (Attorney Advisor)	☐ First Class Mail ☐ Overnight Delivery ☐ EDIS ☐ Email ☐ Upload to Box account *JohnsonHines1379@usitc.gov* *Pyong.Yoon@usitc.gov*
Marissa Ducca, Esq. Jeffrey Hsu, Esq. Office of Unfair Import Investigations U.S. International Trade Commission 500 E. Street, S.W., Suite 401 Washington, DC 20436 Phone: (202) 205-2044	☐ First Class Mail ☐ Overnight Delivery ☒ Email ☒ Upload to Box account *Marissa.Ducca@usitc.gov* *Jeffrey.Hsu@usitc.gov*

Adam D. Swain Alston & Bird LLP 950 F Street NW Washington, DC 20004 Telephone: (202) 239-3300 John D. Haynes Nicholas T. Tsui Lindsay C. Church Shawn P. Gannon Paul Michael Haley Alston & Bird LLP 1201 West Peachtree Street Atlanta, GA 30309 Telephone: (404) 881-7000 Theodore Stevenson Alston & Bird LLP 2200 Ross Avenue, Suite 2300 Dallas, TX 75201 Phone: (214) 922-3400 Caleb J. Bean Alston & Bird LLP 333 South Hope Street 16th Floor Los Angeles, CA 90071 Phone: 213-576-1000 August R. Meny Alston & Bird LLP 90 Park Avenue New York, NY 10016-1387 Phone: 212-210-9400 Warren Lipschitz Alexandra F. Easley MCKOOL SMITH, P.C. 300 Crescent Court Suite 1200 Dallas, TX 75201 Telephone: (214) 978-4000 R. Mitch Verboncoeur MCKOOL SMITH, P.C. 303 Colorado Street Suite 2100 Austin, TX 78701 Telephone: (512) 692-8700	☐ First Class Mail ☐ Overnight Delivery ☒ Email *NKAmazonITC@alston.com* *Nokia_HP_Amazon@mckoolsmith.com*

Joshua J. Newcomer MCKOOL SMITH, P.C. 600 Travis Street, Suite 7000 Houston, TX 77002 Telephone: (713) 485-7316 Kevin Burgess MCKOOL SMITH P.C. 104 East Houston St., Suite 300 Marshall, Texas 75670 Telephone: (903) 923-9000 *Counsel for Complainants Nokia Technologies Oy and Nokia Corporation*	

Eric S. Namrow Stephanie L. Roberts Kandis C. Gibson Manu Bansal, Ph.D. Kevin J. Spinella Eunjean Je Morgan, Lewis & Bockius LLP 1111 Pennsylvania Ave, N.W. Washington, D.C. 20004-2541 Telephone: (202) 739-3000 David J. Levy Rick L. Rambo Thomas R. Davis Morgan, Lewis & Bockius LLP 1000 Louisiana Street, Suite 4000 Houston, TX 77002-5005 Telephone: (713) 890-5000 Jason E. Gettleman Corey R. Houmand Morgan, Lewis & Bockius LLP 1400 Page Mill Road Palo Alto, CA 94304 Telephone: (650) 843-4000 Kevin J. Post Lance W. Shapiro Ropes & Gray LLP 1211 Avenue of the Americas New York, NY 10036 Telephone (212) 596-9000 Matthew J. Rizzolo Ropes & Gray LLP 2099 Pennsylvania Ave, NW Washington, DC 20006 Telephone: (202) 508-4600 Larry L. Shatzer Mark DeBoy EDELL, SHAPIRO & FINNAN 9801 Washingtonian Blvd., Suite 750 Gaithersburg, MD 20878 *Counsel for Respondent HP Inc.*	☐ First Class Mail ☐ Overnight Delivery ☒ Email *HP-Nokia-ITC@morganlewis.com* *HP-Nokia-Ropes1379@ropesgray.com* *ESF_ITC@esfip.com*

/s/ Antonio Ramos
Antonio Ramos
Senior Paralegal
Perkins Coie LLP
505 Howard Street, Suite 1000
San Francisco, CA 94105
Email: *aramos@perkinscoie.com*