US005649036A

United States Patent [19]

Anderson et al.

[11] Patent Number: 5,649,036

[45] Date of Patent: *Jul. 15, 1997

[54] **REMOTE FIBER TEST SYSTEM USING MECHANICAL OPTICAL SWITCHES**

[75] Inventors: **Duwayne R. Anderson**; **Steve U. Reinhold**, both of Redmond; **Lorimer L. Twigg**, Sisters; **Mark D. Marineau**, Redmond, all of Oreg.

[73] Assignee: **Tektronix, Inc.**, Wilsonville, Oreg.

[*] Notice: The term of this patent shall not extend beyond the expiration date of Pat. No. 5,438,638.

[21] Appl. No.: **485,976**

[22] Filed: **Jun. 7, 1995**

Related U.S. Application Data

[63] Continuation-in-part of Ser. No. 392,639, Feb. 23, 1995, abandoned, which is a continuation-in-part of Ser. No. 223,298, Apr. 5, 1994, Pat. No. 5,438,638.

[51] **Int. Cl.**[6] **G02B 6/26**

[52] **U.S. Cl.** **385/16**; 385/25; 356/73

[58] **Field of Search** 356/73.1; 385/15–23, 385/25

[56] **References Cited**

U.S. PATENT DOCUMENTS

3,800,388	4/1974	Borner et al.	29/200
4,239,333	12/1980	Dakes et al.	350/96.21
4,401,365	8/1983	Mizokawa et al.	350/96.2
4,875,772	10/1989	Gentile	356/73.1
4,896,935	1/1990	Lee	350/96.2
4,953,932	9/1990	Mihich	350/96.15
4,955,976	9/1990	Freeman et al.	350/96.21
5,031,994	7/1991	Emmons	350/96.2
5,037,176	8/1991	Roberts et al.	385/16
5,137,351	8/1992	So	356/73.1
5,251,001	10/1993	Dave et al.	356/73.1
5,383,015	1/1995	Grimes	356/73.1
5,438,638	8/1995	Anderson	385/16

Primary Examiner—John Ngo
Attorney, Agent, or Firm—William K. Bucher

[57] **ABSTRACT**

An remote fiber test system includes at least one mechanical optical switch has opposing input and output optical fiber bundles disposed within offset ferrules with at least one input fiber coupled to a measurement test instrument and each of the output fiber coupled to an optical fiber link via wavelength division multiplexers. Each ferrule of the optical switch is mounted in three-point kinematically correct V-groove holder allowing the optical fibers in each optical fiber bundle to traverse on a closed curve path during the rotation of the respective ferrules. The closed curve paths of each optical fiber in one of the optical fiber bundles intersect at least one of the closed curve paths of the optical fiber in the opposing optical fiber bundles. The intersection points of two opposing closed curve paths establish the optimum positioning locations for two opposing fibers.

46 Claims, 20 Drawing Sheets

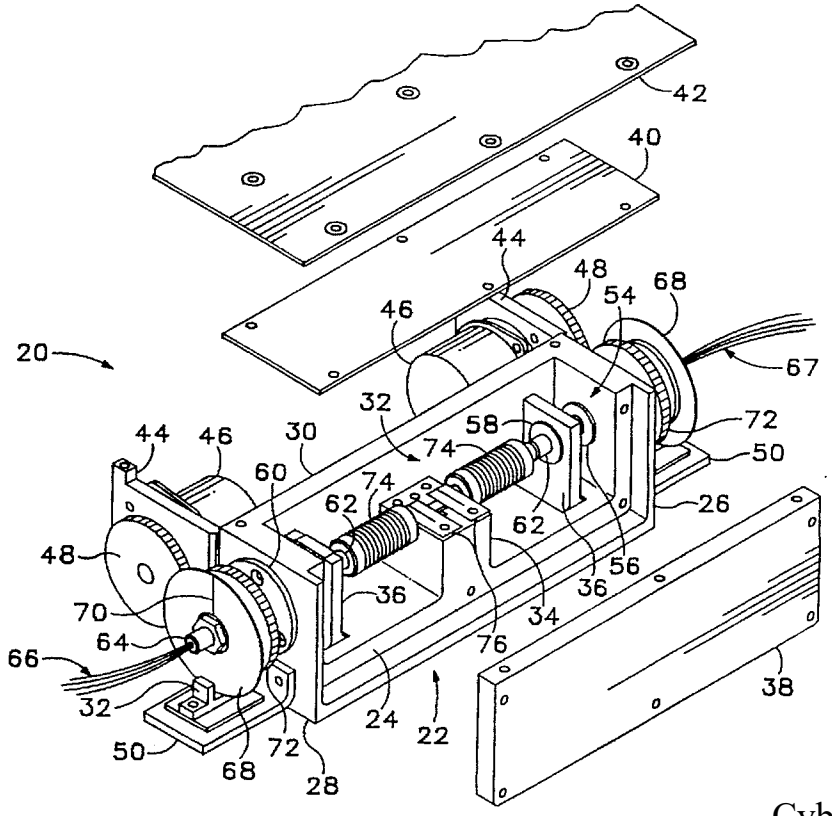

EX1007
CyberSecure
IPR2025-01441

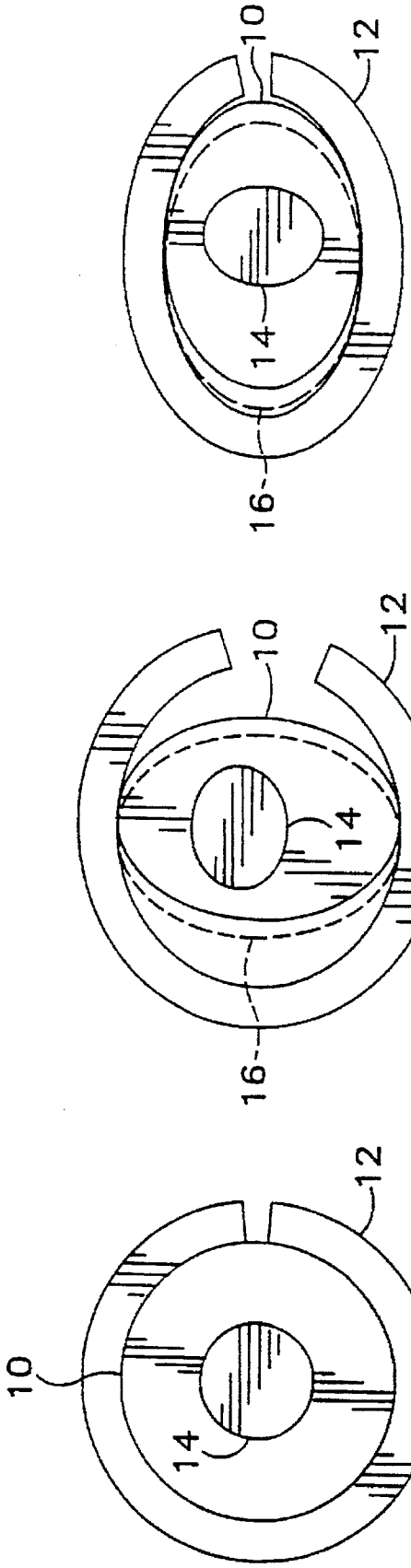

Fig.1A

Fig.1B

Fig.1C

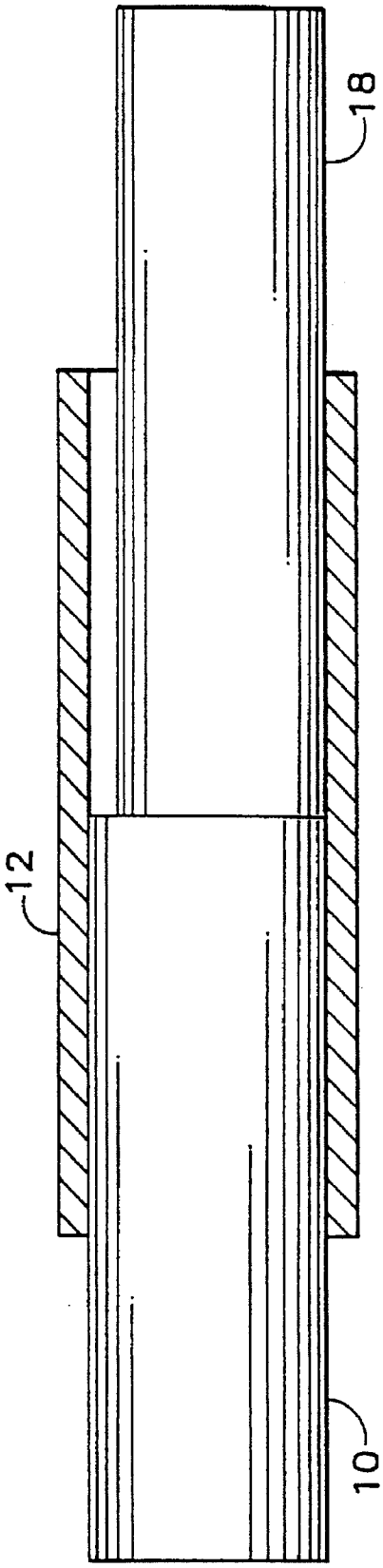

Fig.2

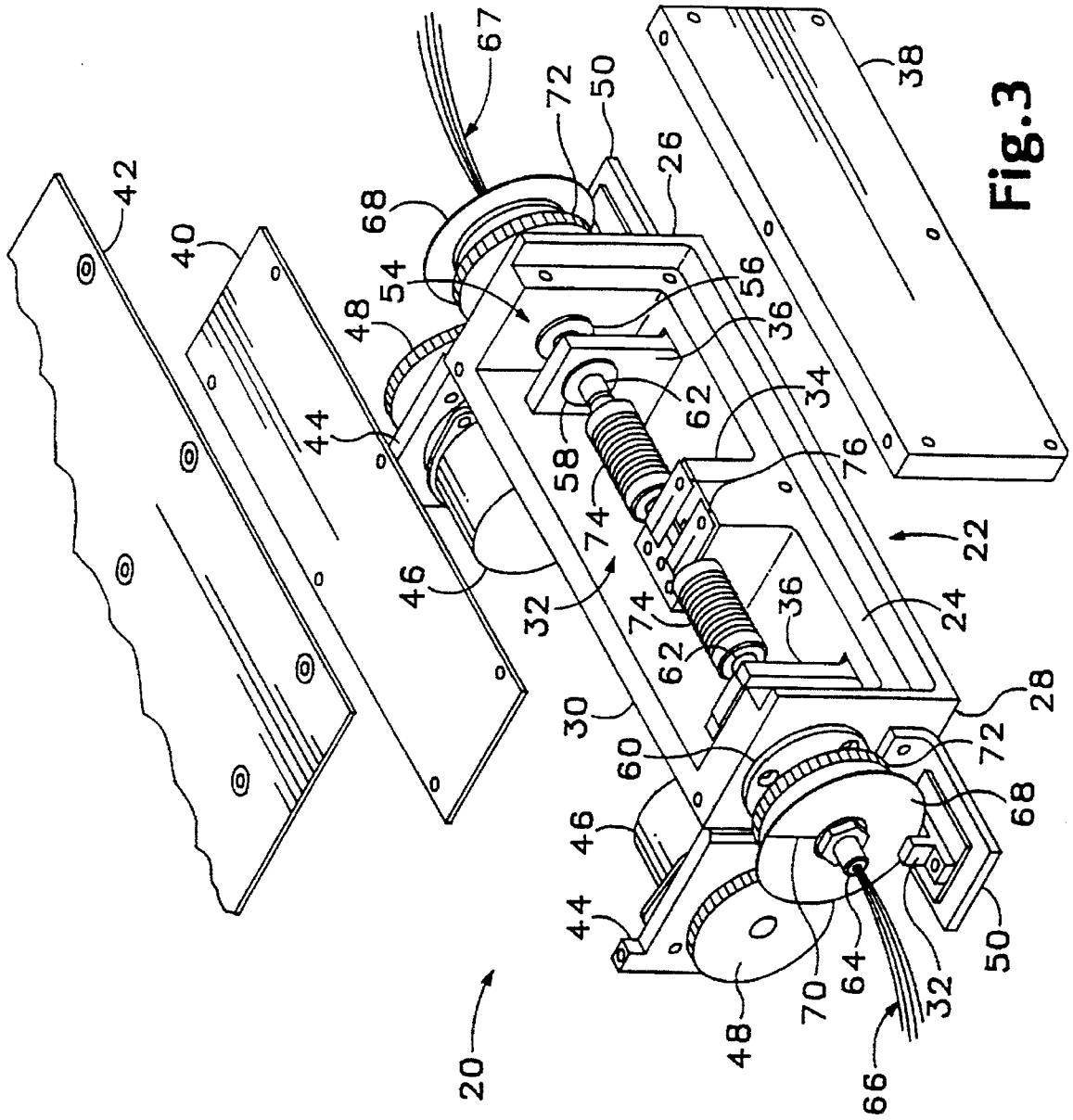
42
40
44
48
54
68
67
72
50
26
38
56
36
62
34
58
76
74
22
46
32
74
36
24
62
30
28
60
72
68
46
44
70
64
32
50
48
66
20

Fig.3

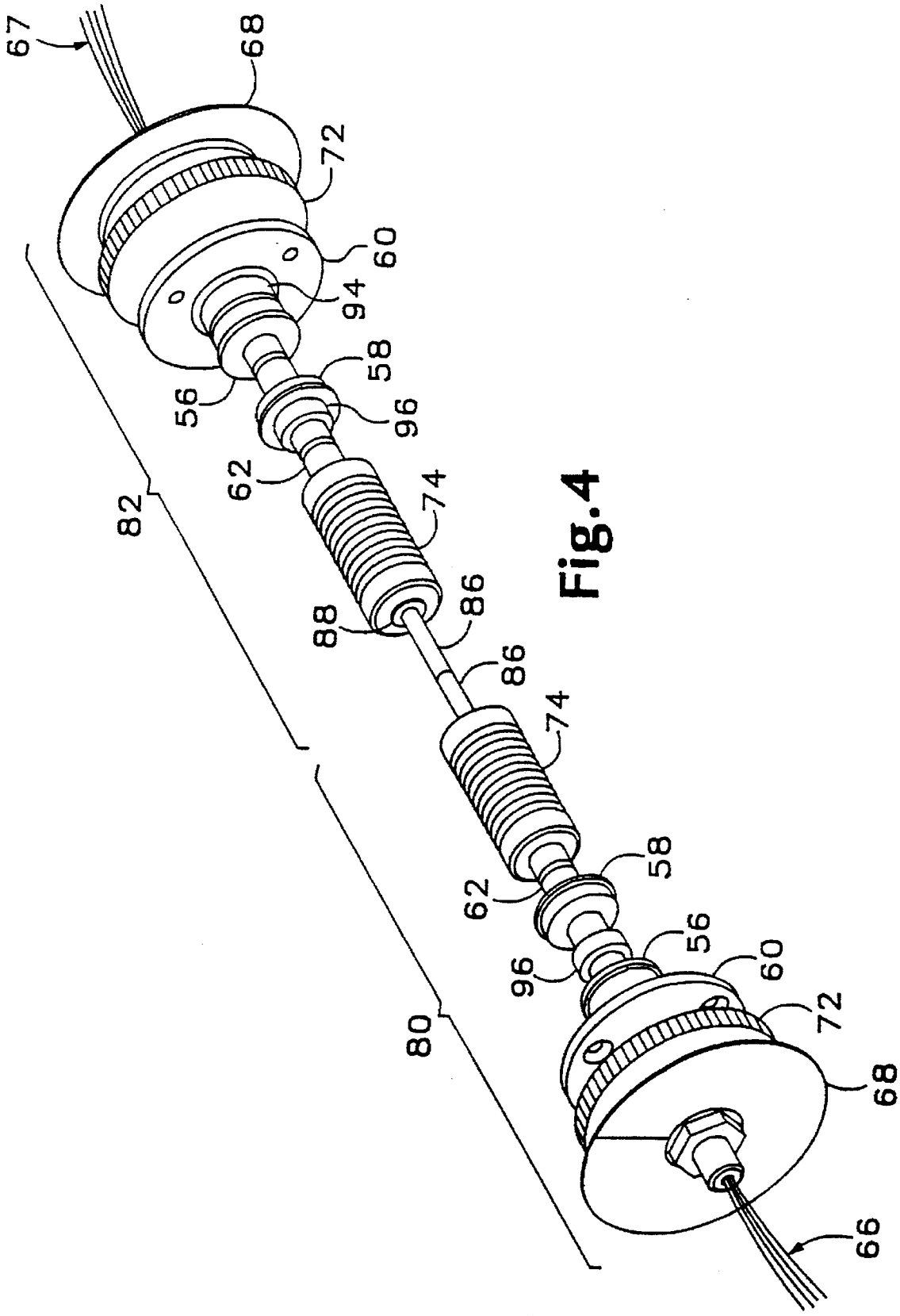

Fig.4

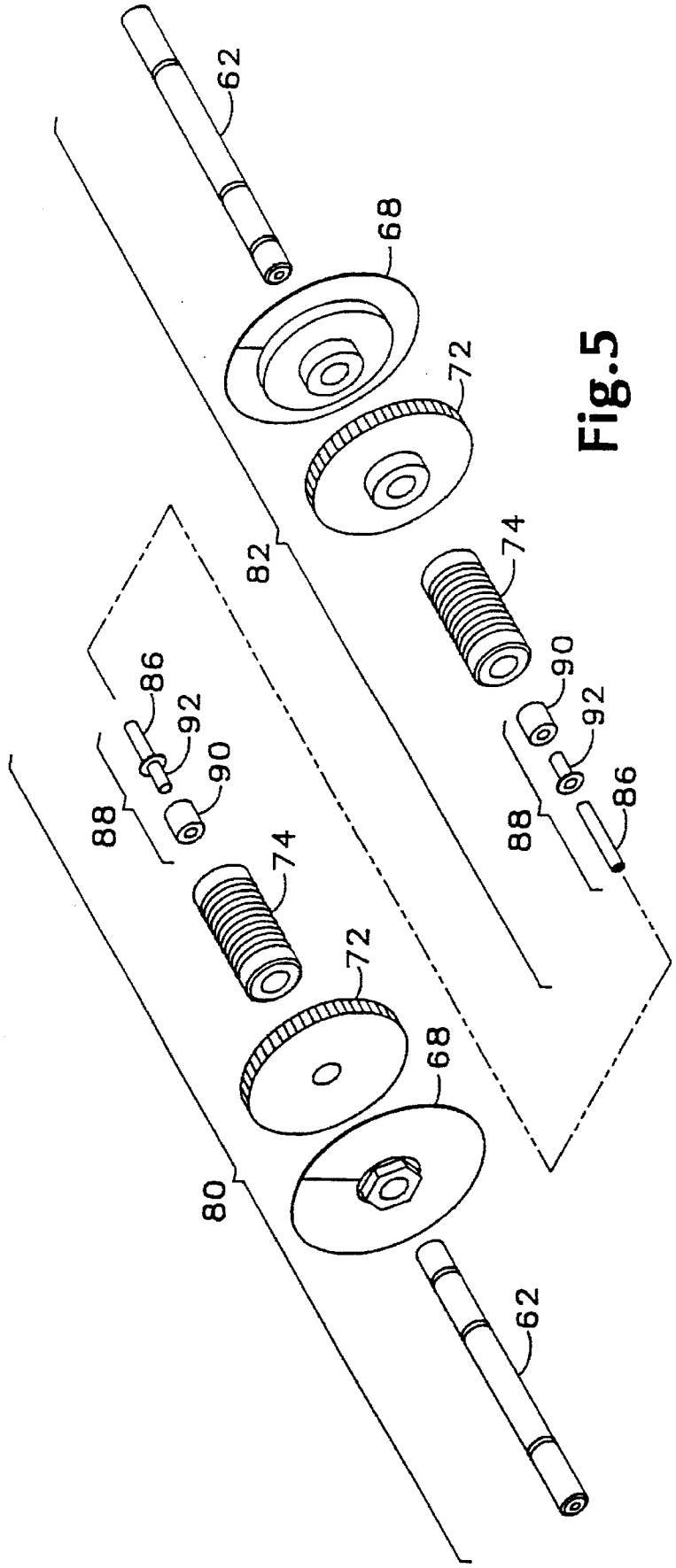

Fig.5

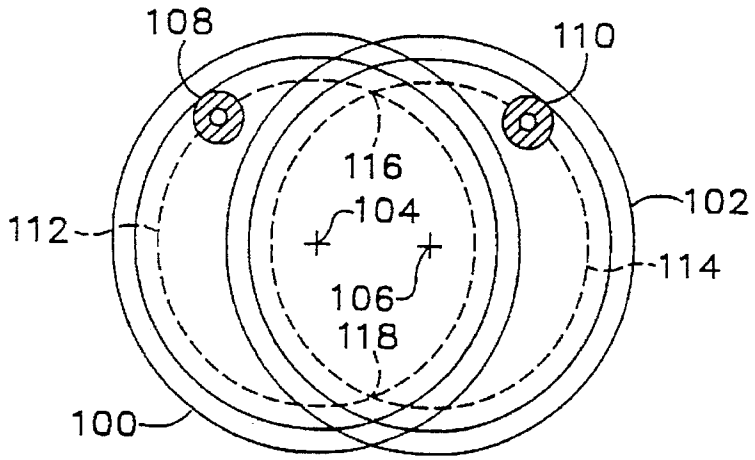

Fig.6

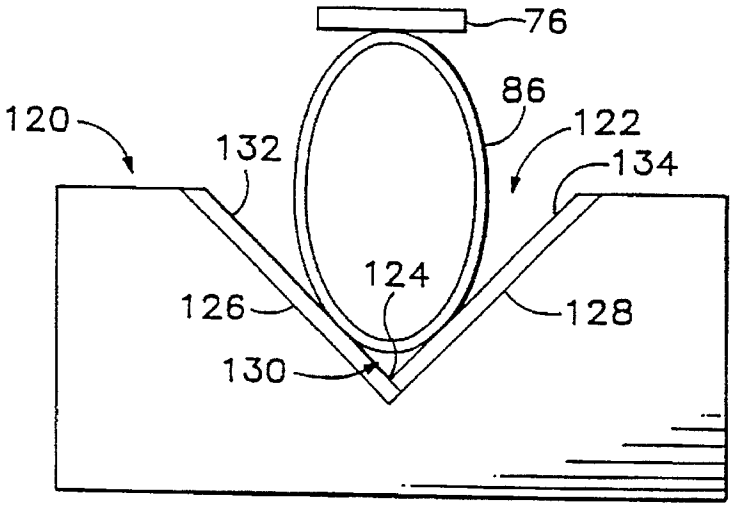

Fig.7A

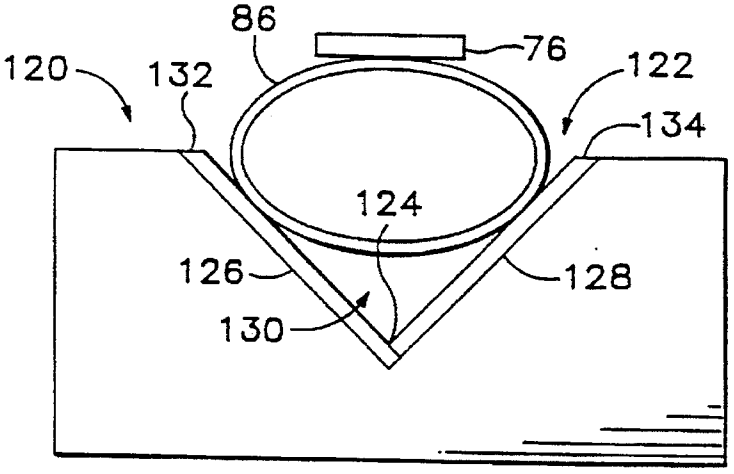

Fig.7B

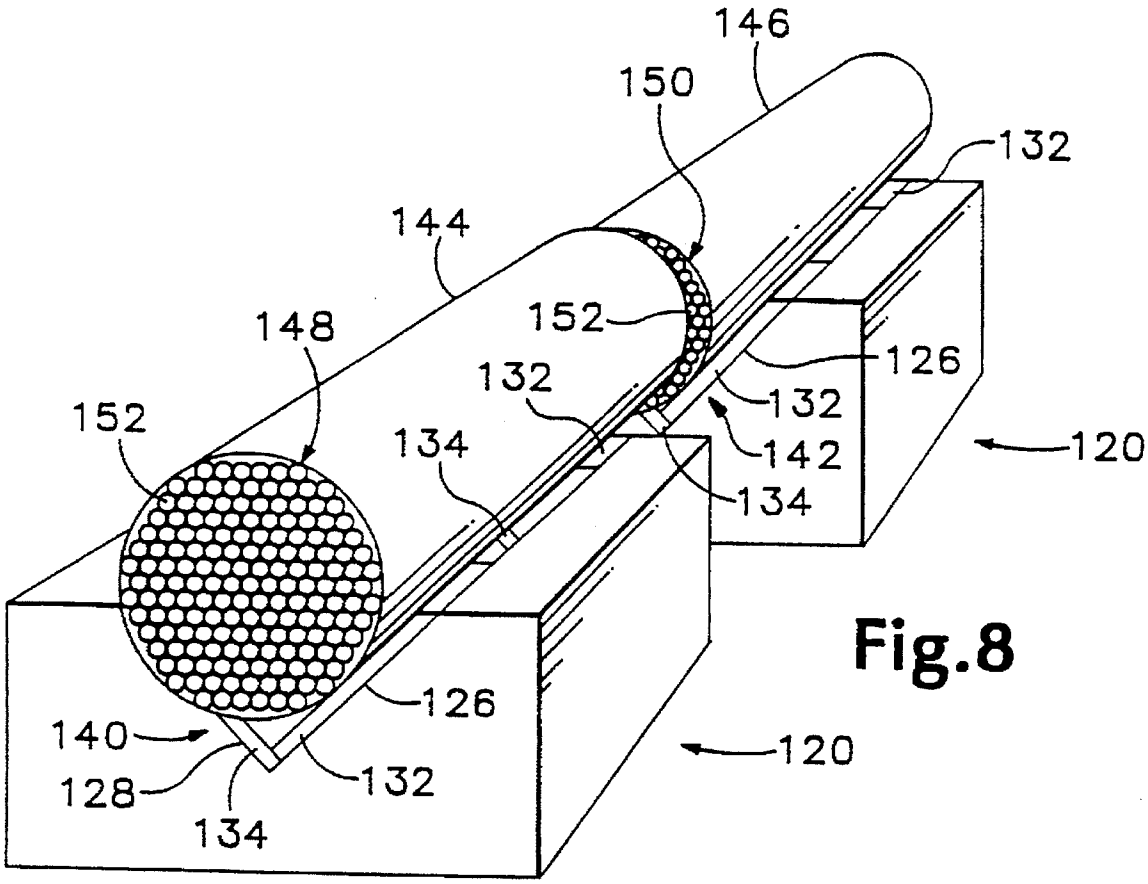
146
150
132
144
148
152
126
132
132
152
134
142
120
134
126
140
128
132
134
120

Fig.8

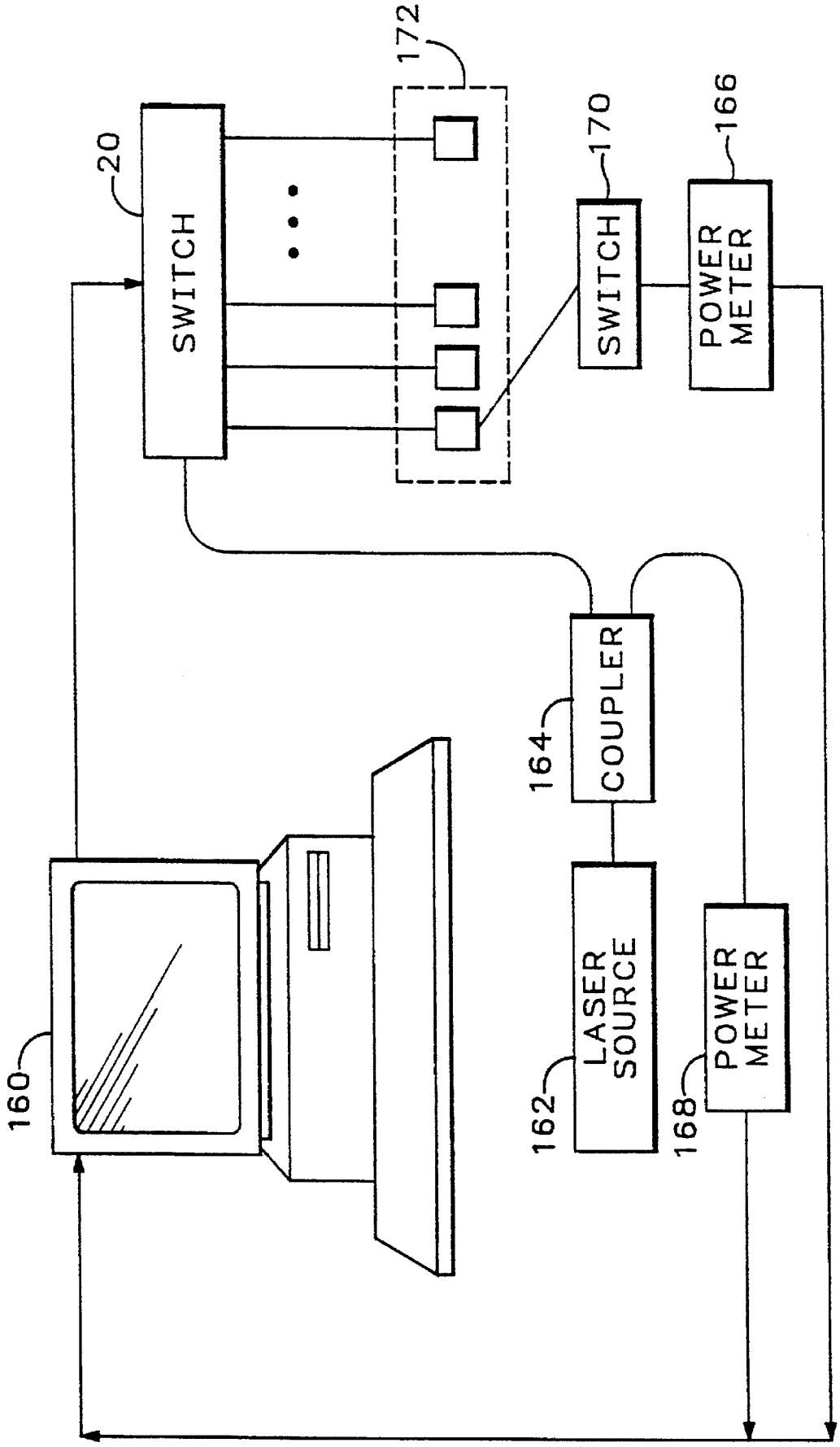
172
20
SWITCH
170
SWITCH
166
POWER METER
164
COUPLER
160
162
LASER SOURCE
168
POWER METER

Fig.9

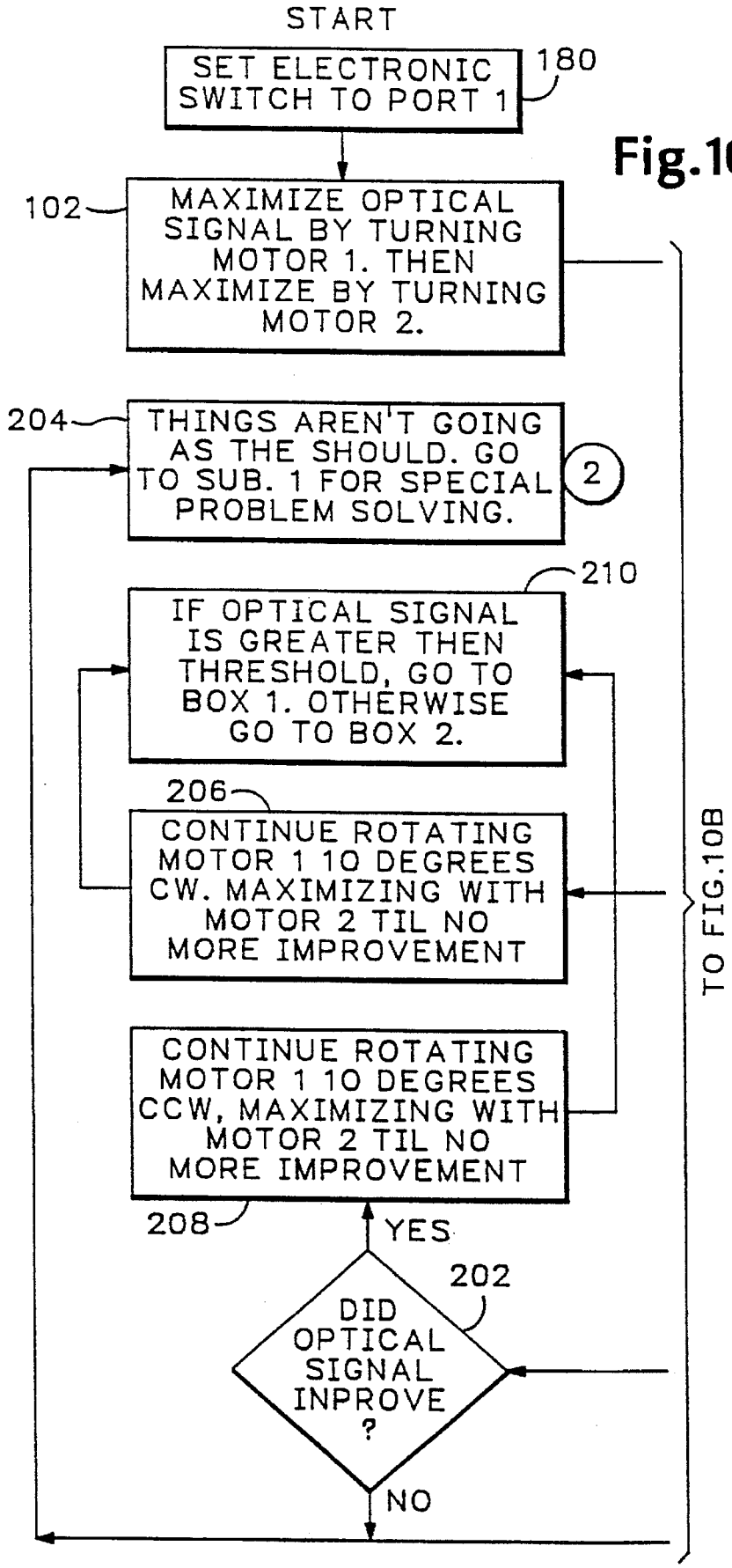
START
SET ELECTRONIC SWITCH TO PORT 1
180
102
MAXIMIZE OPTICAL SIGNAL BY TURNING MOTOR 1. THEN MAXIMIZE BY TURNING MOTOR 2.
204
THINGS AREN'T GOING AS THE SHOULD. GO TO SUB. 1 FOR SPECIAL PROBLEM SOLVING.
2
210
IF OPTICAL SIGNAL IS GREATER THEN THRESHOLD, GO TO BOX 1. OTHERWISE GO TO BOX 2.
206
CONTINUE ROTATING MOTOR 1 10 DEGREES CW. MAXIMIZING WITH MOTOR 2 TIL NO MORE IMPROVEMENT
CONTINUE ROTATING MOTOR 1 10 DEGREES CCW, MAXIMIZING WITH MOTOR 2 TIL NO MORE IMPROVEMENT
208
YES
202
DID OPTICAL SIGNAL INPROVE ?
NO
TO FIG.10B

Fig.10A

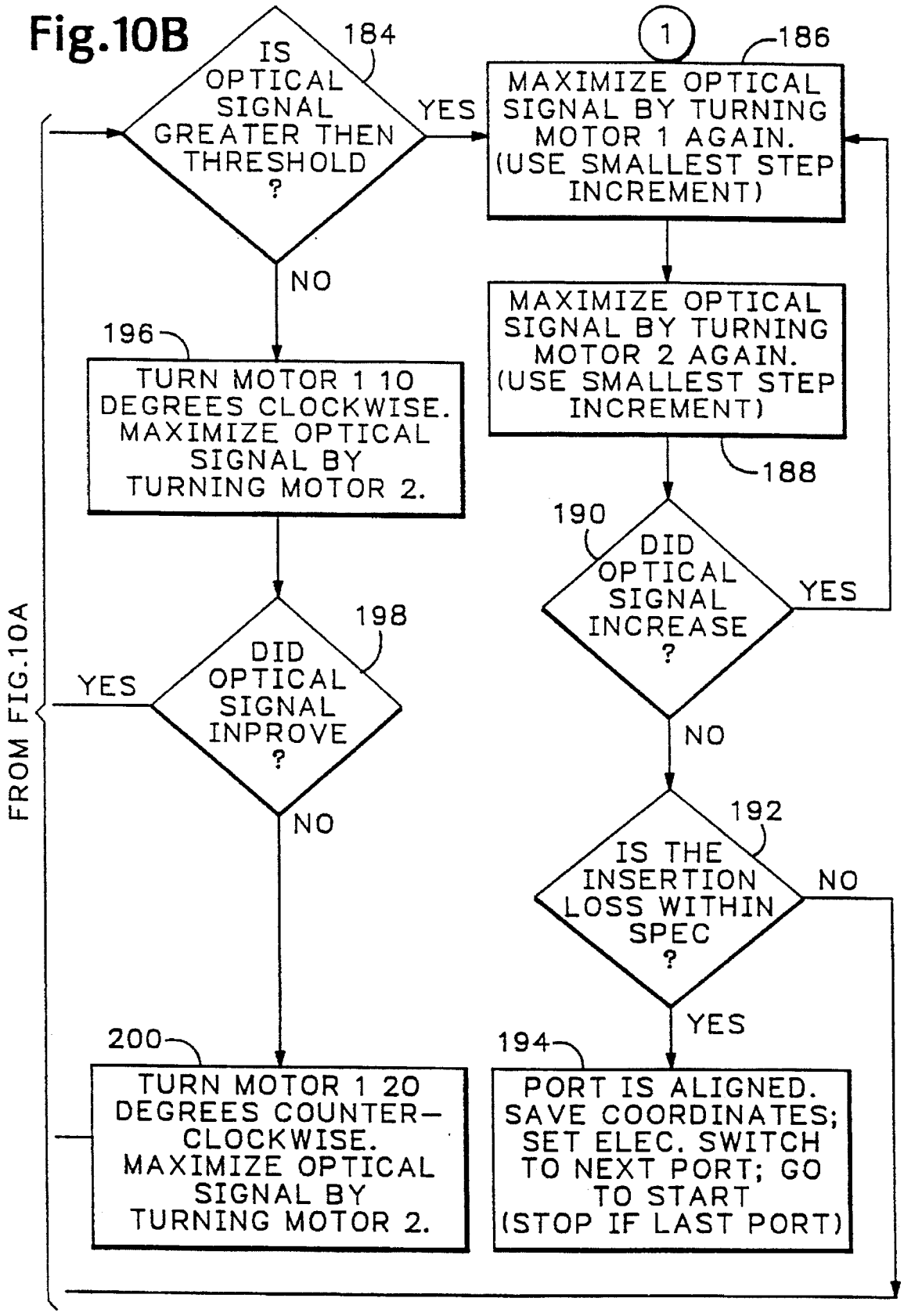
Fig.10B
184
IS OPTICAL SIGNAL GREATER THEN THRESHOLD ?
YES
NO
1
186
MAXIMIZE OPTICAL SIGNAL BY TURNING MOTOR 1 AGAIN. (USE SMALLEST STEP INCREMENT)
MAXIMIZE OPTICAL SIGNAL BY TURNING MOTOR 2 AGAIN. (USE SMALLEST STEP INCREMENT)
188
190
DID OPTICAL SIGNAL INCREASE ?
YES
NO
192
IS THE INSERTION LOSS WITHIN SPEC ?
NO
YES
194
PORT IS ALIGNED. SAVE COORDINATES; SET ELEC. SWITCH TO NEXT PORT; GO TO START (STOP IF LAST PORT)
196
TURN MOTOR 1 10 DEGREES CLOCKWISE. MAXIMIZE OPTICAL SIGNAL BY TURNING MOTOR 2.
198
DID OPTICAL SIGNAL INPROVE ?
YES
NO
200
TURN MOTOR 1 20 DEGREES COUNTER-CLOCKWISE. MAXIMIZE OPTICAL SIGNAL BY TURNING MOTOR 2.
FROM FIG.10A

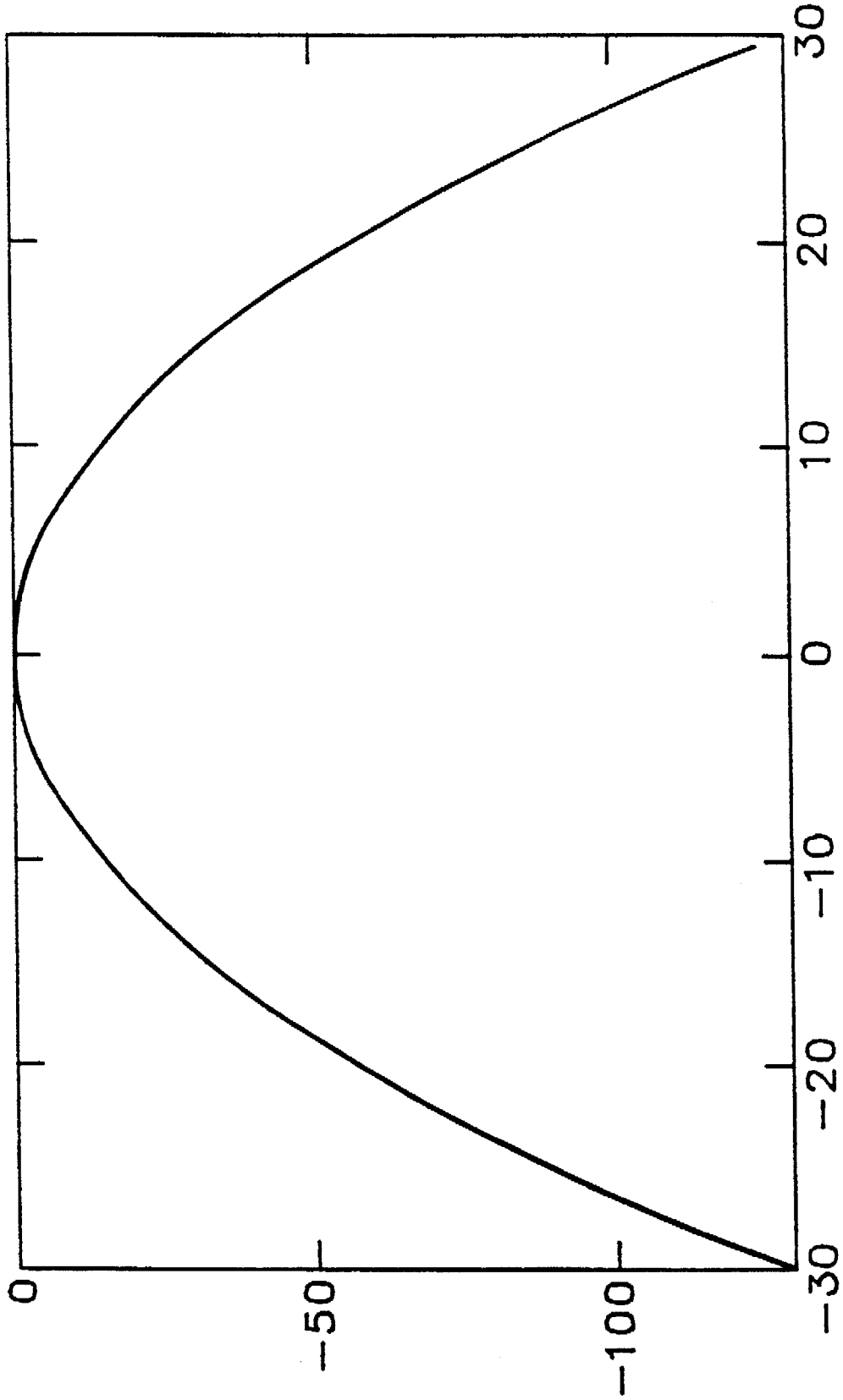

Fig.11

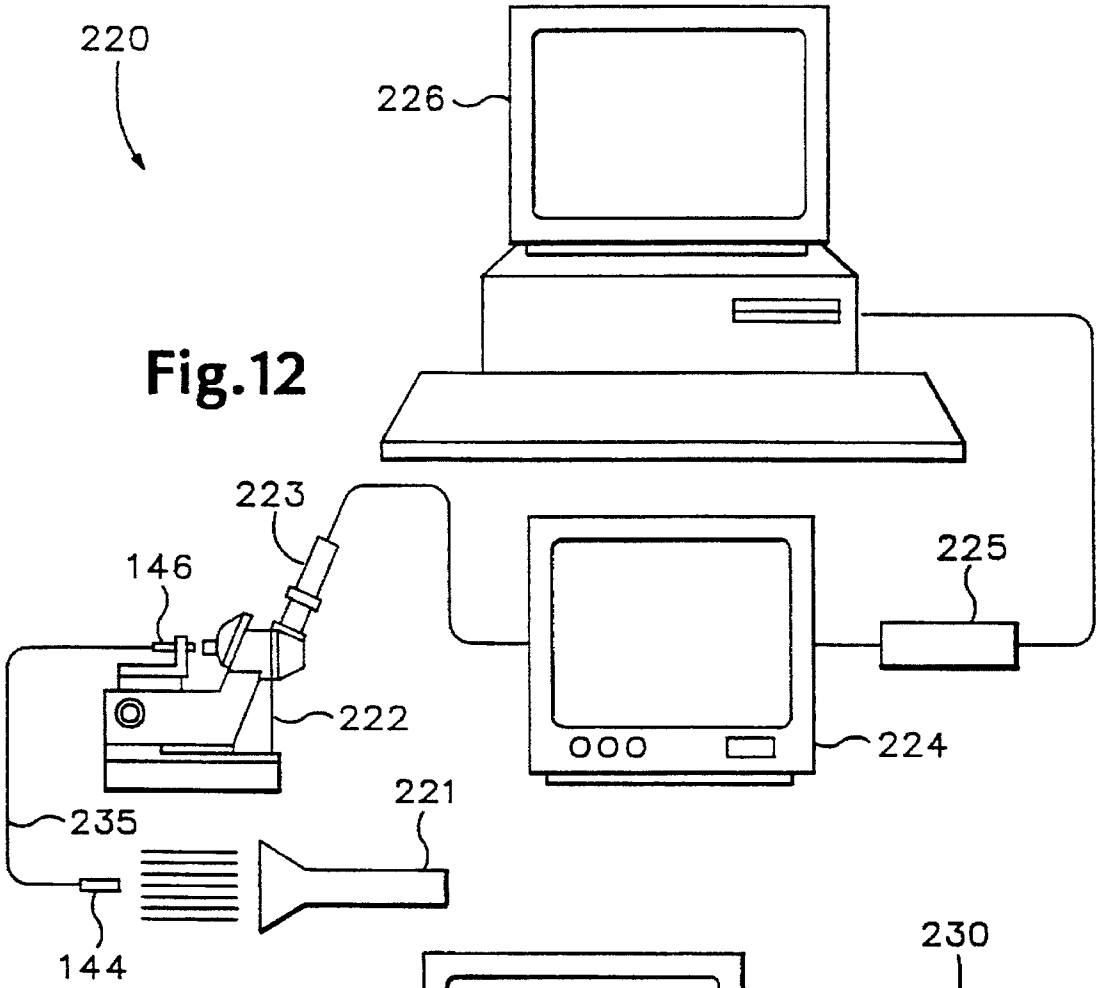
220
226
223
146
225
222
224
221
235
144

Fig.12

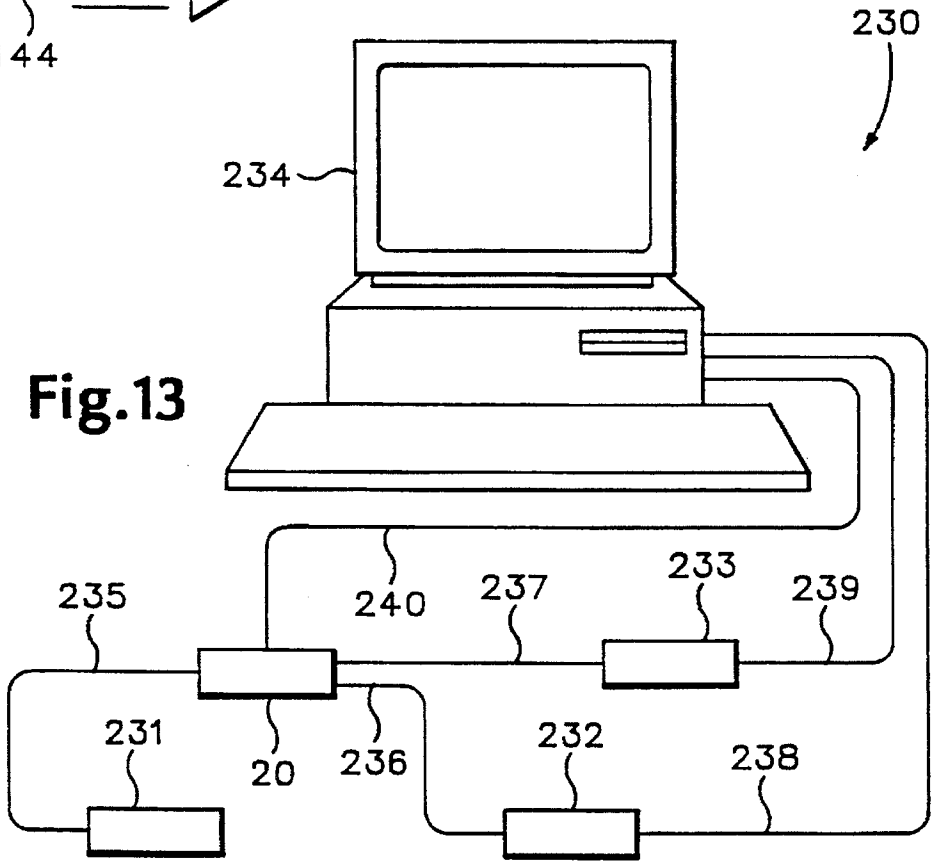
230
234
235
240
237
233
239
231
20
236
232
238

Fig.13

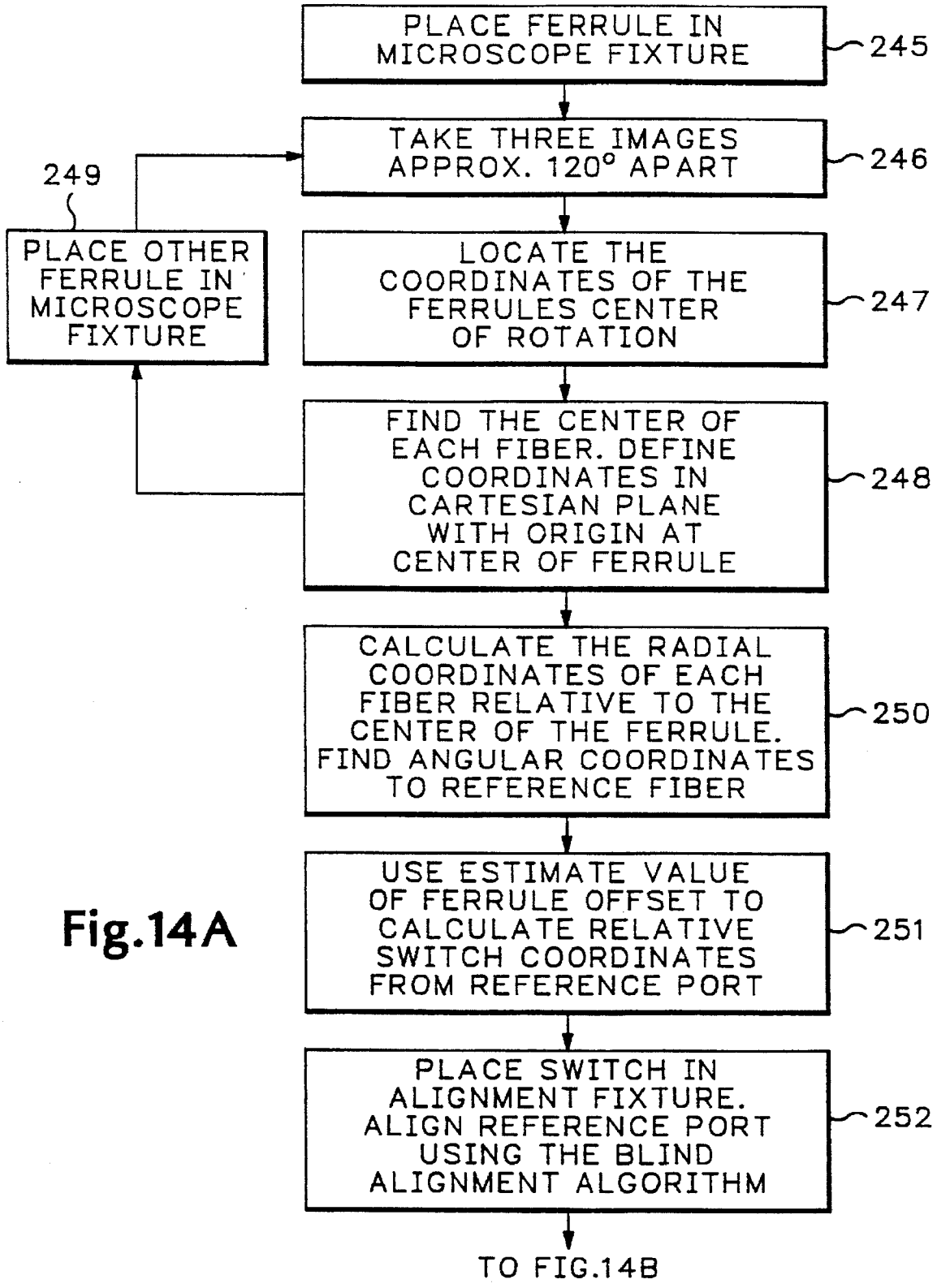
PLACE FERRULE IN MICROSCOPE FIXTURE
245
TAKE THREE IMAGES APPROX. 120° APART
246
249
PLACE OTHER FERRULE IN MICROSCOPE FIXTURE
LOCATE THE COORDINATES OF THE FERRULES CENTER OF ROTATION
247
FIND THE CENTER OF EACH FIBER. DEFINE COORDINATES IN CARTESIAN PLANE WITH ORIGIN AT CENTER OF FERRULE
248
CALCULATE THE RADIAL COORDINATES OF EACH FIBER RELATIVE TO THE CENTER OF THE FERRULE. FIND ANGULAR COORDINATES TO REFERENCE FIBER
250
USE ESTIMATE VALUE OF FERRULE OFFSET TO CALCULATE RELATIVE SWITCH COORDINATES FROM REFERENCE PORT
251
PLACE SWITCH IN ALIGNMENT FIXTURE. ALIGN REFERENCE PORT USING THE BLIND ALIGNMENT ALGORITHM
252
TO FIG.14B

Fig.14A

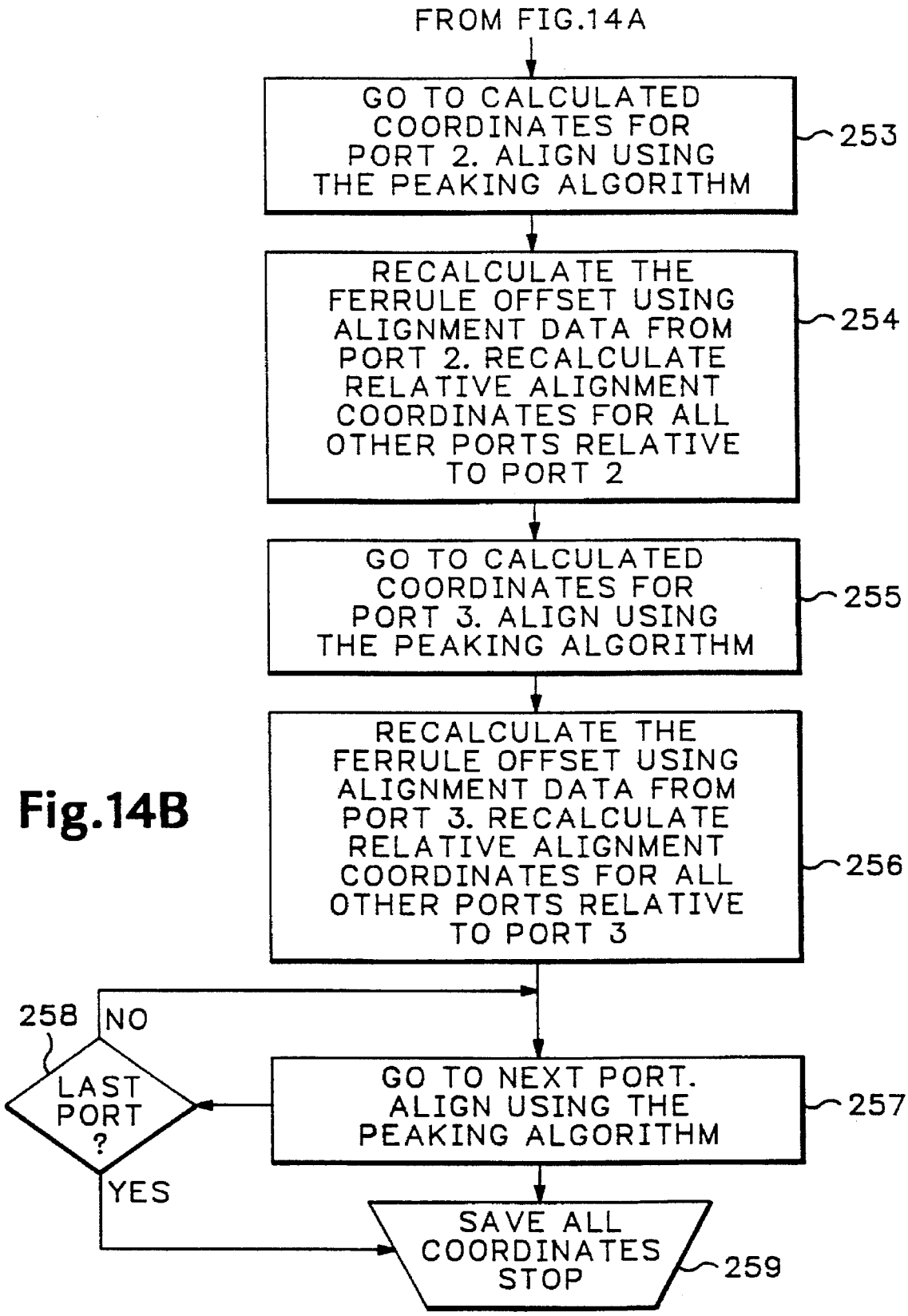
FROM FIG.14A
GO TO CALCULATED COORDINATES FOR PORT 2. ALIGN USING THE PEAKING ALGORITHM
253
RECALCULATE THE FERRULE OFFSET USING ALIGNMENT DATA FROM PORT 2. RECALCULATE RELATIVE ALIGNMENT COORDINATES FOR ALL OTHER PORTS RELATIVE TO PORT 2
254
GO TO CALCULATED COORDINATES FOR PORT 3. ALIGN USING THE PEAKING ALGORITHM
255
RECALCULATE THE FERRULE OFFSET USING ALIGNMENT DATA FROM PORT 3. RECALCULATE RELATIVE ALIGNMENT COORDINATES FOR ALL OTHER PORTS RELATIVE TO PORT 3
256
258
NO
LAST PORT ?
YES
GO TO NEXT PORT. ALIGN USING THE PEAKING ALGORITHM
257
SAVE ALL COORDINATES STOP
259

Fig.14B

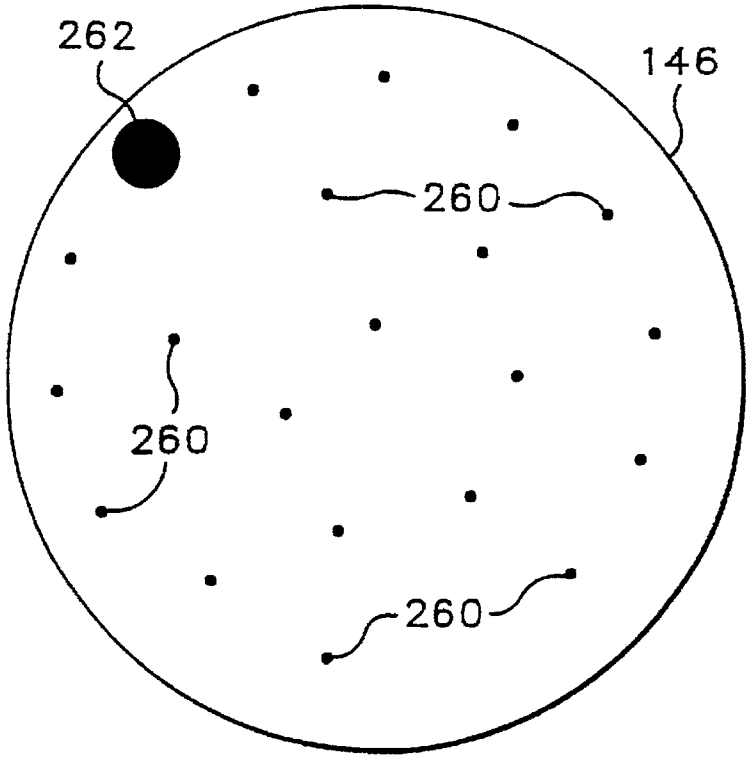

Fig.15

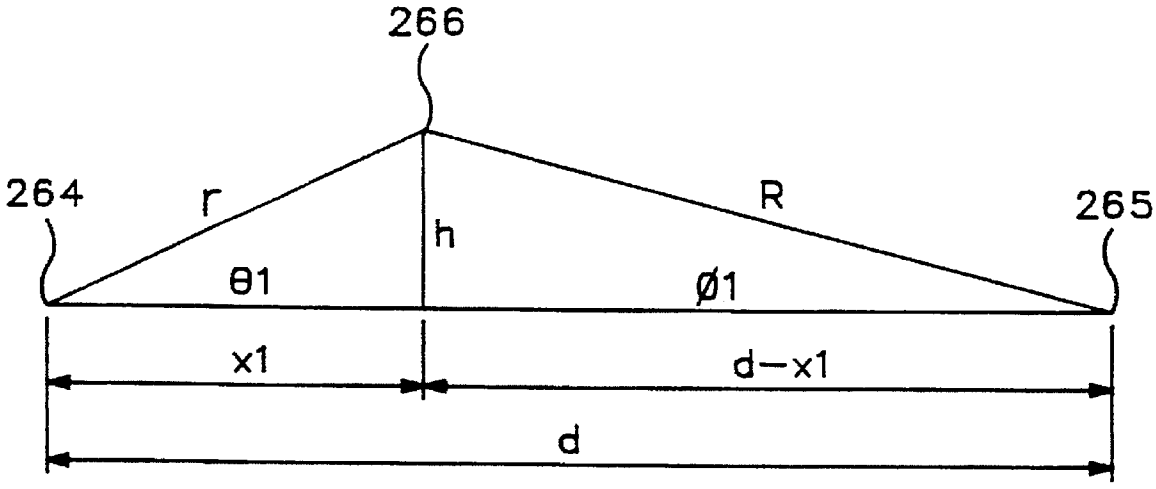

Fig.16

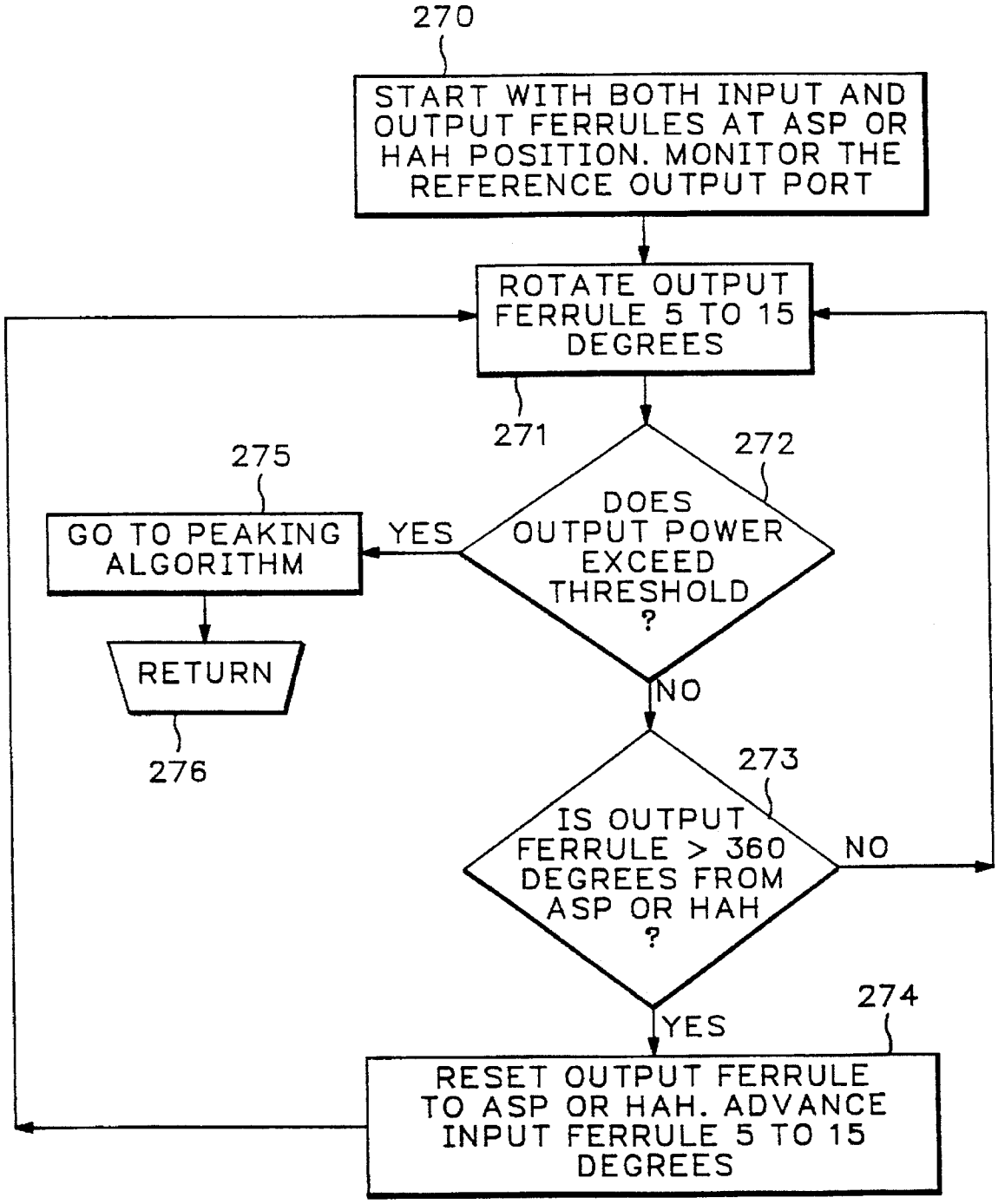
270
START WITH BOTH INPUT AND OUTPUT FERRULES AT ASP OR HAH POSITION. MONITOR THE REFERENCE OUTPUT PORT
ROTATE OUTPUT FERRULE 5 TO 15 DEGREES
271
272
DOES OUTPUT POWER EXCEED THRESHOLD ?
YES
275
GO TO PEAKING ALGORITHM
RETURN
276
NO
273
IS OUTPUT FERRULE > 360 DEGREES FROM ASP OR HAH ?
NO
YES
274
RESET OUTPUT FERRULE TO ASP OR HAH. ADVANCE INPUT FERRULE 5 TO 15 DEGREES

Fig.17

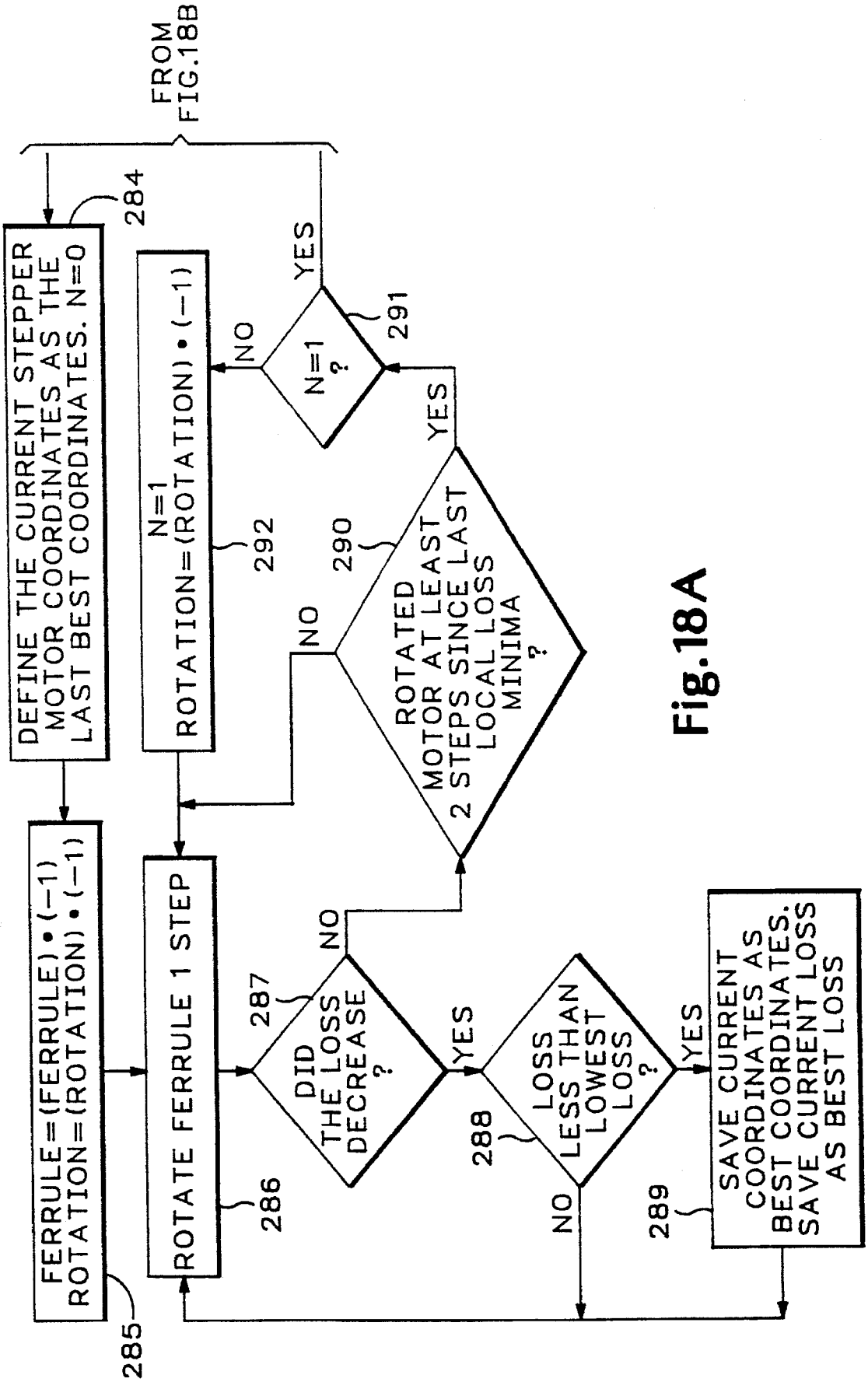
FROM FIG.18B
DEFINE THE CURRENT STEPPER MOTOR COORDINATES AS THE LAST BEST COORDINATES. N=0
284
FERRULE=(FERRULE)•(−1)
ROTATION=(ROTATION)•(−1)
285
ROTATE FERRULE 1 STEP
286
DID THE LOSS DECREASE ?
287
NO
YES
LOSS LESS THAN LOWEST LOSS ?
288
NO
YES
SAVE CURRENT COORDINATES AS BEST COORDINATES. SAVE CURRENT LOSS AS BEST LOSS
289
ROTATED MOTOR AT LEAST 2 STEPS SINCE LAST LOCAL LOSS MINIMA ?
290
NO
YES
N=1 ?
291
NO
YES
N=1
ROTATION=(ROTATION)•(−1)
292

Fig.18A

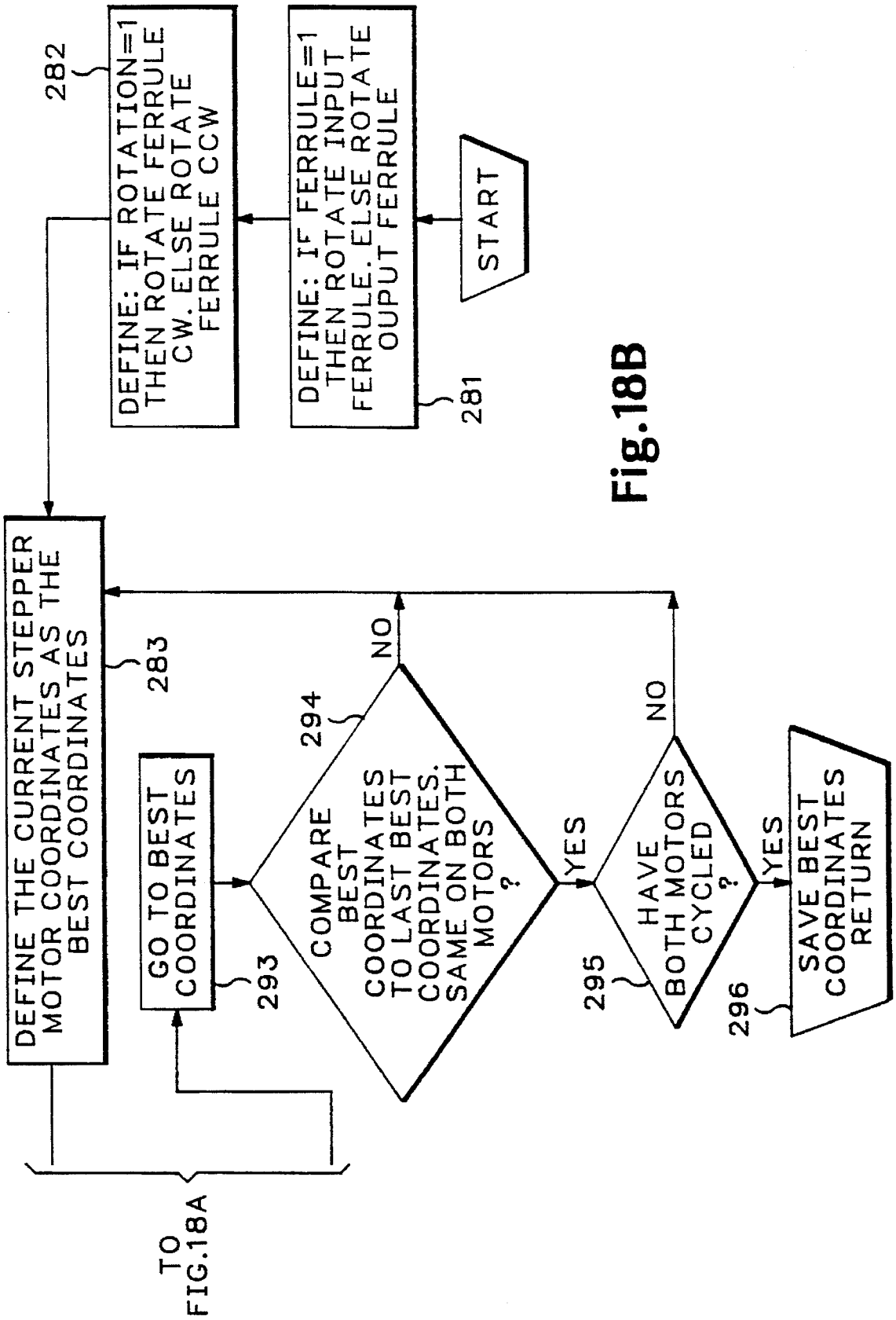
START
DEFINE: IF FERRULE=1 THEN ROTATE INPUT FERRULE. ELSE ROTATE OUPUT FERRULE
281
DEFINE: IF ROTATION=1 THEN ROTATE FERRULE CW. ELSE ROTATE FERRULE CCW
282
DEFINE THE CURRENT STEPPER MOTOR COORDINATES AS THE BEST COORDINATES
283
GO TO BEST COORDINATES
293
COMPARE BEST COORDINATES TO LAST BEST COORDINATES. SAME ON BOTH MOTORS ?
294
NO
YES
HAVE BOTH MOTORS CYCLED ?
295
NO
YES
SAVE BEST COORDINATES RETURN
296
TO FIG.18A

Fig.18B

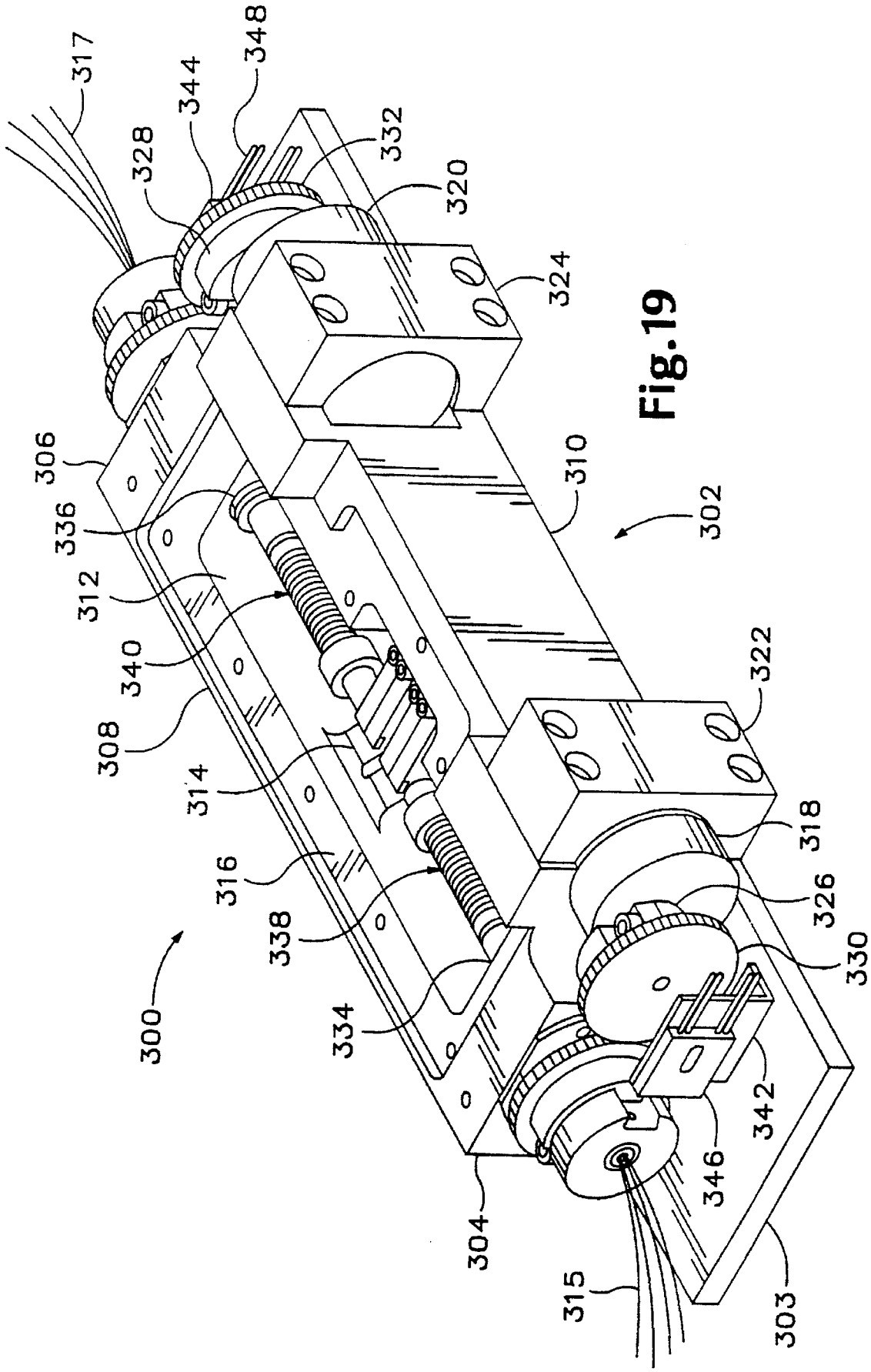
317
348
344
328
332
320
324
306
336
312
340
308
314
316
338
334
300
310
302
322
318
326
330
342
346
304
315
303

Fig.19

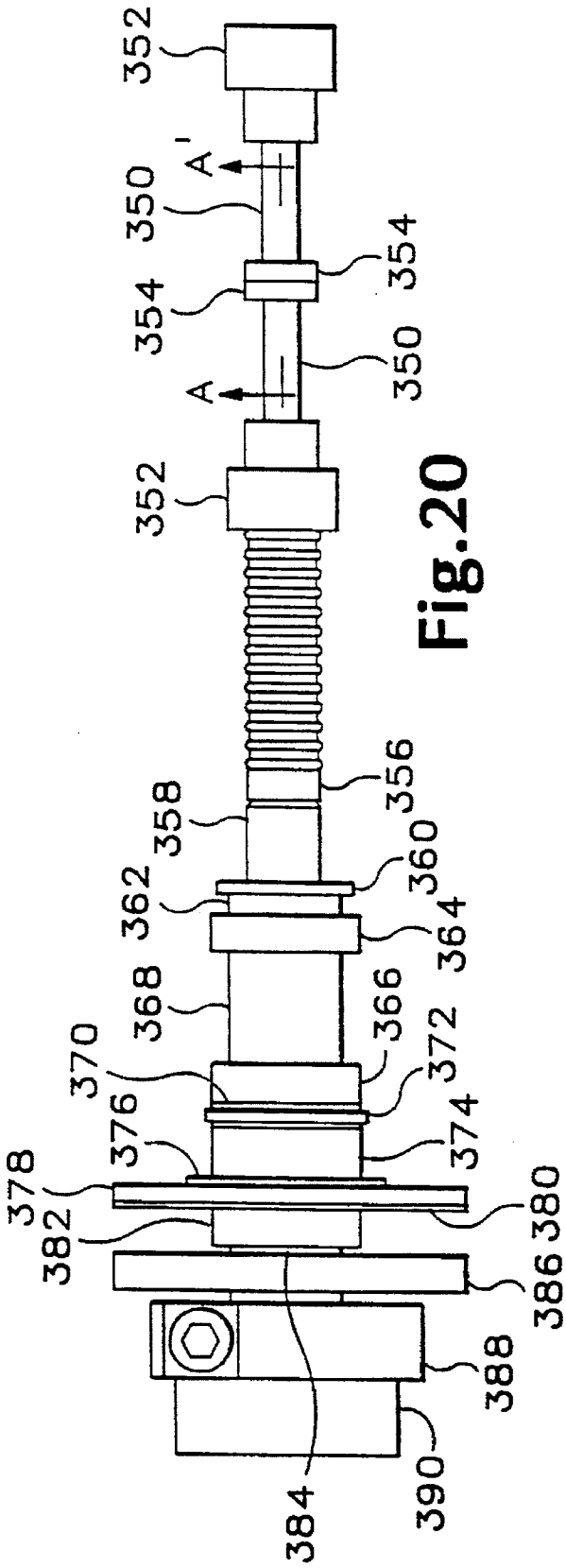
352
A'
350
354
354
350
A
352
356
358
360
362
364
368
366
370
372
376
374
378
380
382
386
388
384
390

Fig.20

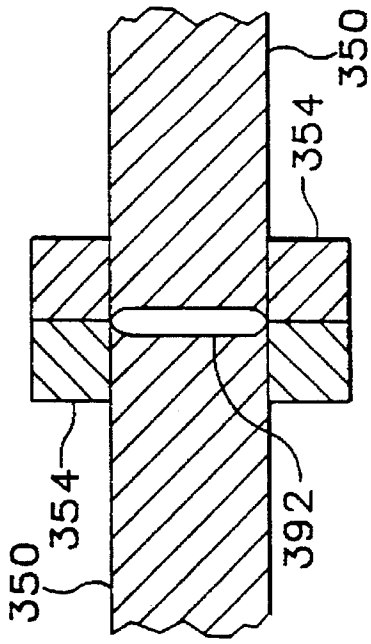
350
354
354
392
350

Fig.21

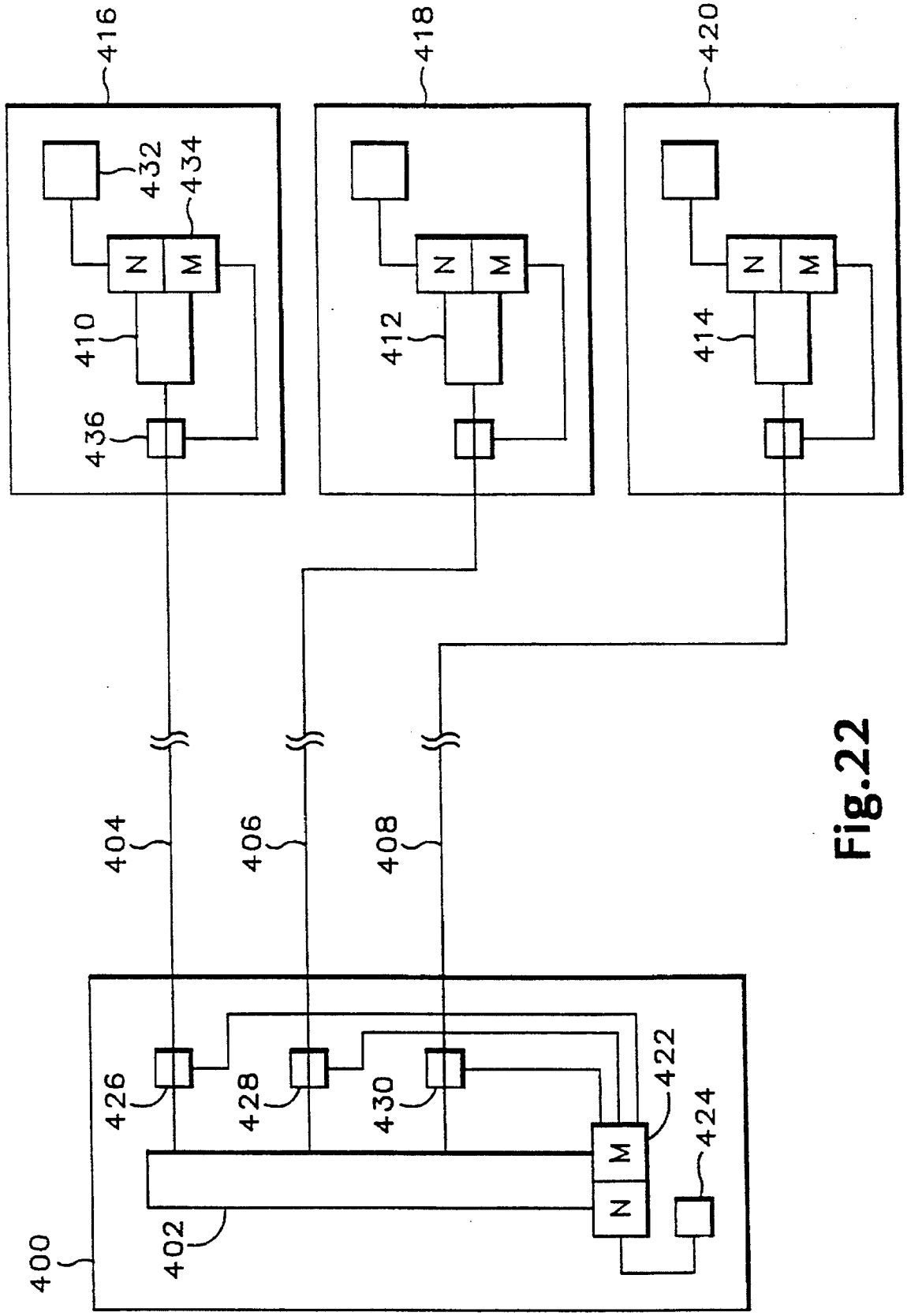
416
418
420
432
434
N
M
410
412
414
436
404
406
408
426
428
430
422
424
400
402

Fig.22

REMOTE FIBER TEST SYSTEM USING MECHANICAL OPTICAL SWITCHES

This is a continuation-in-part application of application Ser. No. 08/392,639, filed Feb. 23, 1995, now abandoned, which is a continuation-in-part application of application Ser. No. 08/223,298, filed Apr. 5, 1994, now U.S. Pat. No. 5,438,638.

BACKGROUND OF THE INVENTION

The present invention relates generally to remote fiber test systems and more specifically to a remote fiber test system having at least one mechanical optical switch for rotatably coupling an optical fiber of a first optical fiber array coupled to a measurement test instrument with a second optical fiber of an opposing optical fiber array coupled to an optical fiber link.

There are generally two types of optical switches in use today: electronic optical switches and mechanical optical switches. Electronic optical switches may be characterized as having no moving parts and perform the switching function, for example, by acousto-optically or electro-optically diverting the light passing through the switch.

Mechanical optical switches, on the other hand, physically move optical fiber elements to produce the switching function. Generally the physical movement of the optical fibers in mechanical optical switches is either transversal or rotational. One family of mechanical optical switches uses focusing elements, such as lenses or the like, to focus the light from one fiber to another. The use of such elements increases the translational tolerances of the switch but substantially decreases its angular tolerances and increases its cost. The other family of mechanical optical switches directly couple the light from one optical fiber to the other. The optical fibers are positioned in opposing relationship with the end faces of the optical fibers in substantially abutting relationship with each other. While this design eliminates the focusing elements and increases the angular tolerances, it substantially decreases the translational tolerance of the switch.

U.S. Pat. No. 4,401,365 describes a rotary-type optical switch in which a pair of opposing optical transmission path mounting members are disposed on the same rotational axis. One mounting member may be fixedly secured in a casing while the other member rotates on a central shaft. Alternately, the shaft may be fixed with one of the mounting members rotating about the shaft. The shaft or the mounting member is directly connected to a motor so that one mounting member is rotatable with respect to the other as the shaft or mounting member is rotated by the motor. The mounting members have respective plane surfaces which are closely opposite each other. Optical fibers are secured in each mounting member such that the end faces of the optical fibers in each mounting member are concentric about the rotational axis of the mounting member and lie on respective phantom circles having the same radii.

U.S. Pat. No. 5,037,176 describes another rotary-type optical switch that includes first and second identical arrays of optical fibers held in axial alignment and relatively rotatable about an axis of rotation to effect optical coupling and decoupling of fibers in the opposing arrays. The optical switch has cylindrical switch bodies that receive the first and second identical arrays of optical fibers. The switch bodies are maintained in coaxial alignment by means of a split sleeve coupler. A tube surrounds the sleeve containing the fiber arrays and O-rings may be disposed between the sleeve and the tube to permit an index matching fluid to be retained within the switch to prevent back reflections. The optical switch described in the '176 patent is incorporated into an optical switch assembly described in U.S. Pat. No. 5,031,994.

A critical factor in mechanical fiber optical switches (MFOS) is the precise alignment of the opposing optical fibers in the switch. Currently, this requires the components of the switch to be made to very precise tolerances along with exacting manufacturing processes. As will be described below, current MFOS fall short in cycle-to-cycle repeatability, long-term repeatability and absolute alignment of the opposing optical fibers.

Mechanical fiber optic switches have unique bearing requirements that are not found in other types of applications. These special requirements need to be examined to understand why current MFOS do not provide the optimum alignment between switching fibers. The alignment tolerances for light coupling between single-mode optical fibers is well known and need not be discussed in detail here. Assuming no longitudinal or tilt misalignment and the input and output fibers are identical, the fractional coupling transmission for optical fibers with lateral misalignment is

$$T=\exp\left\{-\frac{x^2}{w^2}\right\} \quad [1]$$

where x is the lateral offset and w is the $1/e^2$ radius of the irradiance pattern of the fundamental mode of the optical fiber. The derivative of equation [1] is taken to obtain the change in loss for a given change in coupling efficiency.

$$\Delta T=-\frac{2x}{w^2}\cdot\Delta x\cdot\exp\left\{-\frac{x^2}{w^2}\right\} \quad [2]$$

Equation [2] can be rearranged to solve for Δx as a function of the lateral offset, radius of the fundamental fiber mode, and the change in loss. The result is

$$\Delta x=-\frac{w^2}{2x}\cdot\Delta T\cdot\exp\left\{\frac{-x^2}{w^2}\right\} \quad [3]$$

Using the above equations and assuming a transmission efficiency of the switch must be repeatable within 0.01 dB on a cycle-to-cycle basis with a nominal transmission loss of less than 0.50 dB, maximum alignment tolerance values can be calculated for cycle-to-cycle repeatability, long-term repeatability, and absolute alignment. Since the $1/e^2$ radius of the fundamental mode in standard single-mode fiber is roughly 5.0 microns, the nominal loss of 0.50 dB corresponds to a lateral misalignment of approximately 1.7 microns (according to equation [1]). According to equation [3], if the transmission changes less than 0.01 dB on a cycle-to-cycle basis, the misalignment of 1.7 microns must be repeated to within 0.015 microns, or 15 nanometers. The numerical tolerance are calculated for an optical fiber having a mode field diameter of 5.0 microns. Other optical fiber may, for example, have mode filed diameters, such as 5.1 or 5.6 microns. Different mode field diameters will change the numerical tolerances slightly but not substantially.

The 0.015 micron requirement is for cycle-to-cycle repeatability only. There is also a long term repeatability requirement where the transmission efficiency must not change by more than 0.10 dB over about 100,000 cycles. Applying the same analysis using equations [1] and [3], the position accuracy of the opposing fibers in the switch must repeat to within 0.15 microns on a long-term basis or about ¼th of a wavelength of visible light.

Referring now to FIG. 1A, there is shown an end view of a cylindrical shaft **10** inside a split sleeve **12**. In an ideal

world, the shaft **10** is perfectly round and has exactly the same outside diameter as the equally perfectly round inside diameter of the split sleeve **12** with the shaft **10** touching the split sleeve **12** along its entire circumference. A bore **14** formed in the shaft **10** for holding the optical fibers is perfectly round and concentric with the shaft **10** and split sleeve **12**. FIGS. **1B** and **1C** illustrate on an exaggerated scale the type of shaft **10**, split sleeve **12**, and bore **14** that can be expected in the real, imperfect world. None of the elements **10**, **12**, or **14** will be perfectly round. Instead, shaft **10** and split sleeve **12** will approximate a cylindrical surface, with local regions where the radius is slightly too large, or too small. This is shown in the figures as an ellipse. As can be seen from the figures, the points of contact between the split sleeve **12** and the shaft **10** will change as one or the other rotates, or if any slight lateral torque, as shown by dashed ellipse **16**, is applied to the shaft **10**, so that fibers (not shown) in the shaft will not trace out concentric circles. Notice also that, at the point of contact, the surface of the split sleeve **12** is parallel to the surface of the shaft **10**. The only force preventing the shaft **10** from slipping in the split sleeve **12** is the frictional force between the two surfaces. The frictional force is incapable of reliably providing the kind of cycle-to-cycle or long-term repeatability that is needed. Furthermore, there is the paradox of lubrication. In order to extend the life of the bearing surfaces it is desirable to lubricate them, but lubrication reduces the frictional forces between the two surfaces, resulting in more wobble.

FIGS. **1B** and **1C** illustrate an additional problem. The fibers align themselves to the shaft **10** via the bore **14** drilled along the axis of the shaft **10**, and this bore **14** has its own set of tolerances. Specifically, the bore **14** will be slightly out of concentricity with the outside surface of the shaft **10**, and like the outside surface of the shaft **10**, it will be slightly out-of-round.

There are multiple dimensional tolerances that must be tightly specified if the input and output fibers of the switch are to rotate on identical circles that are precisely concentric. The design parameters that must be firmly controlled are:

Roundness of the input shaft outside diameter.

Roundness of the output shaft outside diameter.

Roundness of the input shaft inside diameter.

Roundness of the output shaft inside diameter.

Concentricity of the input shaft inside and outside diameters.

Concentricity of the output shaft inside and outside diameters.

Outside diameter of the input shaft.

Inside diameter of the input shaft.

Outside diameter of the output shaft.

Inside diameter of the output shaft.

Inside diameter of the split sleeve.

Roundness of the split sleeve inside diameter.

Diameters of the input and output fibers.

Concentricity of the input and output fibers.

To maintain an insertion loss of less than 0.50 dB, all of these tolerances must add up to less than about 0.17 microns of misalignment. This is an extremely difficult task, and to accomplish it the individual components (input fibers, output fibers, input shaft, output shaft, and split sleeve) must have several dimensional tolerances that are sub-micron. This is certainly not conducive for minimizing the costs of individual components, and is daunting in terms of manufacturability.

Another issue in mechanical fiber optic switch design is switch repeatability. Referring to FIG. **2**, there is shown a side view of the shaft **10** and sleeve **12** of FIGS. **1B** and **1C** with the sleeve **12** being sectioned. The split sleeve **12** works with shaft **10** that is slightly larger than the inside diameter of the unexpanded sleeve **12**. Because the sleeve **12** is split, it can expand slightly to allow the shaft **10** (a ferrule containing the optical fibers) to fit inside with no diametrical clearance. Diametrical clearance is unsatisfactory because it results in slop within the bearing, and there is needed less than 0.015 microns of misalignment non-repeatability between the opposing fibers to meet the cycle-to-cycle repeatability specifications.

As has been discussed with FIGS. **1B** and **1C**, the out of roundness on the part of the shaft **10** and the sleeve **12** will cause the fiber to move on curves that are not circles. However, barring wear in the bearing, out-of-roundness should not result in slop or lack of repeatability. Out-of-roundness will affect the total coupling efficiency, but not the repeatability. FIG. **2** shows the shaft **10** having an interference fit with the sleeve **12**. However, a second shaft **18** will most likely have a slightly different diameter owing to the inevitable tolerances in manufacturing. If the second shaft **18** has a larger diameter than the first shaft **10**, then it will expand the split sleeve **12** a little bit, resulting in an interference fit for the second shaft **18** but not the first shaft **10**. Now the first shaft **10** can slop in the split sleeve **12**. If the second shaft **18** has a smaller diameter than the first, then it will wobble. No matter what happens one of the two shafts **10** or **18** will wobble within the split sleeve **12**. To meet the cycle-to-cycle repeatability requirement this wobble must be less that 0.015 microns, so the diameter of the two shafts **10** and **18** must be equal to about 0.008 microns. This specification would require extremely expensive parts. However, for all practical purposes, meeting such a specification would be impossible to do.

What is needed is an inexpensive mechanical fiber optic switch that meets the cycle-to-cycle repeatability, long-term repeatability, and absolute misalignment specifications. Such a switch should use loosely toleranced commercially available off-the-shelf components and be easy to assemble without requiring fine alignment of the switch components and fibers. In addition, the switch should have a fiber mounting system that has minimum bearing wear and is insensitive to dimensional differences of the components. Further, the switch should have good stability over temperature.

SUMMARY OF THE INVENTION

Accordingly, the present invention is to an optical switch having at least a first optical transmission path rotating about a first independent and offset rotational axis for positioning the first optical transmission path on a first closed curve and at least a second optical transmission path rotating about a second independent and offset rotational axis for positioning the second optical transmission path on a second closed curve. The first and second optical transmission paths are in opposing relationship forming an optical interface with the closed curves of the optical transmission paths being laterally offset from each other for establishing intersecting points on the closed curves. First and second mounting members are provided for holding the respective first and second optical transmission paths with the first mounting member having a rotational axis axially aligned with the first independent and offset rotational axes and the second mounting member having a rotational axis axially aligned with the second independent and offset rotational axis. The first and second optical transmission paths are positioned off of the respective rotational axes of the mounting members. Means are provided for storing angular coordinates repre-

sentative of the intersecting points of the first and second closed curves of the respective first and second optical transmission paths. Means are provided for axially aligning the first and second optical transmission paths at one of the intersecting points on the closed curves for coupling the measurement test instrument to the optical fiber link using drive motors coupled to the respective mounting members and responsive to the angular coordinates for selectively rotating the first and second optical transmissions paths relative to each other about their respective independent and offset rotational axes.

In still a further aspect of the invention the mounting members are positioned in individual, kinematically designed offset holder assemblies. In the preferred embodiment, the kinematic mounts are V-groove structures having an apex and angularly extending sidewalls forming a V-shaped cavity for receiving the respective mounting members. A spring clamp is positioned over the V-shaped cavity for securing the mounting members in a three-point cavity. The V-groove structures are formed from a material having substantially the same or greater hardness as the mounting members or have inserts secured to the sidewalls of the V-groove structures and the spring clamps that have substantially the same or greater hardness as the mounting members. The mounting members and the V-groove structures are preferably a borosilicate or ceramic material. The inserts are preferably hard materials, such as ceramic or sapphire.

In the preferred embodiment, the mounting members are first and second ferrules with each ferrule having a centrally disposed longitudinal axis about which the ferrule rotate, an outside diameter and a central bore for receiving the respective first and second optical fibers. The optical fibers may completely fill the ferrules with any one optical fiber lying substantially on the rotational axes of the ferrules not moving on a closed curve. Further, the optical interface ends of the ferrules have a sleeve member of ceramic material, which when polished provide separation between the first and second optical fibers. Alternately, the ferrules may be made of a ceramic material having a greater hardness than the interior optical fibers.

The axial aligning means includes means for selectively rotating the first and second optical transmission paths relative to each other about their respective independent and offset rotational axis. Means are provided for storing angular coordinates representative of the intersecting points of the first and second closed curves of the respective first and second optical transmission paths. The rotating means include first and second stepper motors or DC motors with high resolution encoders responsive to the angular coordinates of one of the intersecting points of the first and second closed curves for coupling rotational movement to the respective first and second optical transmission paths. First spur gears mounted to the respective stepper or DC motors transmit rotation movement to rotatable shafts via second spur gears mounted on the rotatable shafts. The rotatable shafts are coupled to the respective optical transmission path mounting members. The rotatable shafts include a first shaft element having a central bore for receiving the respective first and second optical transmission paths and a flexible drive shaft coupling for connecting the first drive shaft element to the respective optical transmission path mounting members. Also included are first and second bearings having a central bore for receiving the first shaft element of the rotatable drive shafts. Alternately, the rotating means may be first and second manually rotatable reduction gear assemblies coupled to transmit rotational movement to the respective first and second optical transmission paths.

The method for axially aligning the opposing optical transmission paths of the optical switch comprising the steps of (1) rotating the first optical transmission path on the first closed curve to one of the intersecting points in response to the angular coordinate representative of the position of the first optical transmission path at the intersecting point on the first closed curve and (2) rotating the second optical transmission path on the second closed curve to the intersecting point corresponding to the intersecting point in step (1) in response to the angular coordinate representative of the position of the second optical transmission path at the intersecting point on the second closed curve. In the preferred method these steps are performed simultaneously. An additional step in aligning the opposing optical transmission paths is to select the intersecting point on the closed curves closest to the optical transmission paths prior to rotating the first and second optical transmission paths to the selected intersecting point. A further set of steps in aligning the opposing optical transmission paths are: (1) rotating the respective first and second optical transmission paths past the selected intersecting point by the same amount; and (2) counter-rotating the first and second optical transmission paths simultaneously and stopping the optical transmission paths at the same time at the intersecting point. In an optical switch having a plurality of optical transmission paths rotating about the one or both of the independent and offset rotational axes, an additional step of selecting one of the plurality of optical transmission paths from the plurality of optical transmissions paths.

Certain conditions may occur which could damage the optical switch. Further steps of generating respective interrupt signals for stopping the respective drive motors if the drive motors drive past respective home positions and generating a user error code when this condition occurs. An additional validation step is performed when selecting an optical transmission path of the plurality of optical transmission paths. The selected optical transmission path has to be within selected limits established by the number of optical transmission paths in the plurality of optical transmission paths. A user error code is generated when the selected optical transmission path of the plurality of optical transmission paths is outside the selected limits. Steps may also be included to sum the angular coordinates of a current optical transmission path intersecting point with a newly selected angular coordinate of a optical transmission path to determine if the summed angular coordinates exceed a maximum range value. If this condition occurs a user error code is generated.

The optical switch is usable in a remote fiber test system having at least a first measurement test instrument for testing an optical fiber link having optical transmission fibers and an optical test fiber and at least a first optical switch for remotely connecting the measurement test instrument to one end of the optical fiber link, the optical switch including at least a first optical transmission path rotating about a first independent and offset rotational axis for positioning the first optical transmission path on a first closed curve with the first optical transmission path being coupled to the measurement test instrument, and at least a second optical transmission path rotating about a second independent and offset rotational axis for positioning the second optical transmission path on a second closed curve with the second optical transmission path being coupled to the optical fiber link. The first and second optical transmission paths are in opposing relationship forming an optical interface, with the closed curves of the optical transmission paths being laterally offset from each other for establishing intersecting points on the

closed curves. First and second mounting members hold the respective first and second optical transmission paths with the first mounting member having a rotational axis axially aligned with the first independent and offset rotational axes and the second mounting member having a rotational axis axially aligned with the second independent and offset rotational axis. The first and second optical transmission paths are positioned off of the respective rotational axes of the mounting members. Means are provided for storing angular coordinates representative of the intersecting points of the first and second closed curves of the respective first and second optical transmission paths. Means are provided for axially aligning the first and second optical transmission paths at one of the intersecting points on the closed curves for coupling the measurement test instrument to the optical fiber link using drive motors coupled to the respective mounting members and responsive to the angular coordinates for selectively rotating the first and second optical transmissions paths relative to each other about their respective independent and offset rotational axes. An optical coupler, such as a wavelength division multiplexer or the like, couples the second optical transmission path to the optical test fiber. The measurement test instrument may be an optical time domain reflectometer, optical power meter, SDH/SONET test set or the like. A second optical switch may be added to the system for remotely connecting another measurement test instrument to the other end of the optical fiber link. The optical switch of the remote fiber test system may be provided with a plurality of optical transmission paths rotating about either or both of the independent and offset rotational axes for coupling multiplicity of measurement test instruments to multiple optical fiber links.

The objects, advantages and novel features of the present invention are apparent from the following detailed description when read in conjunction with appended claims and attached drawings.

BRIEF DESCRIPTION OF THE DRAWINGS

FIG. **1A–1C** are respective idealized and real world representations of a prior art coaxial alignment scheme for a mechanical fiber optic switch.

FIG. **2** is a side view of the prior art coaxial alignment scheme for a mechanical fiber optic switch.

FIG. **3** is an exploded perspective view of the mechanical optical switch according to the present invention.

FIG. **4** is a perspective view of the ferrule drive assembly in the mechanical optical switch according to the present invention.

FIG. **5** is an exploded perspective view of the ferrule drive assembly in the mechanical optical switch according to the present invention.

FIG. **6** is a diagrammatic representation of the offset ferrules in the mechanical optical switch according to the present invention.

FIGS. **7A** and **7B** are end views of the kinematically correct holder assemblies in the mechanical optical switch according to the present invention.

FIG. **8** is a simplified perspective of the offset input and output ferrules in the mechanical optical switch according to the present invention.

FIG. **9** is a representative alignment fixture for aligning the optical fibers of the input port with the optical fibers of the output port in the mechanical optical switch according to the present invention.

FIGS. **10A** and **10B** are a typical flow chart of a procedure for aligning the optical fibers of the input port with the optical fibers of the output port in the mechanical optical switch according to the present invention.

FIG. **11** is a graph representing a mathematical model for coupling between two misaligned optical fibers used in the alignment procedure for the optical ports in the mechanical optical switch according to the present invention.

FIG. **12** is a representation of an analytical station of an alignment apparatus used for calibrating the mechanical optical switch according to the present invention.

FIG. **13** is a representation of a mechanical alignment station of an alignment apparatus used for calibrating the mechanical optical switch according to the present invention.

FIG. **14** is a flow chart of a procedure for determining the angular coordinates of intersecting points of opposing optical fibers of the input port and output port in the mechanical optical switch according to the present invention.

FIG. **15** is a representation of an inverted image of optical fibers in the output ferrule in the mechanical optical switch according to the present invention.

FIG. **16** is a representation of the alignment condition for an arbitrary input fiber in the mechanical optical switch according to the present invention.

FIG. **17** is a flow chart of a blind search routine for locating a reference fiber in the mechanical optical switch according to the present invention.

FIG. **18** is a flow chart for a peaking routine for optimizing the alignment of opposing fibers of the input port and output port and for returning the angular coordinates in the mechanical optical switch according to the present invention.

FIG. **19** is a perspective view of an improved mechanical optical switch according to the present invention.

FIG. **20** is a plan view of the mounting member drive line assembly of the improved mechanical optical switch according to the present invention.

FIG. **21** is a cross-section view along line A—A'of the mounting member of the improved mechanical optical switch according to the present invention.

FIG. **22** is a simplified representation of a remote fiber test system using the mechanical optical switch according to the present invention.

DETAILED DESCRIPTION OF THE PREFERRED EMBODIMENT

Referring to FIG. **3**, there is shown an exploded perspective view of the mechanical optical switch **20** according to the present invention. One use for switch **20** is in remote fiber test systems. In such a system, the switch **20** connects a remote test unit, such as an optical time domain reflectometer, optical power meter, or the like, to various optical fibers in order to evaluate them. Another use is in conjunction with central office telephone switches for redirecting phone signals to a different optical fiber line when the original line is damaged.

Switch **20** has a housing **22** having a base **24**, end walls **26** and **28**, and sidewall **30** forming a partial cavity **32**. Within the cavity **32** is a central pedestal **34** and bearing supports **36** rising from the base **24**. The beating supports **36** are disposed between the central pedestal **34** and the end walls **26** and **28**. A removable sidewall **38** and top plate **40** are provided for enclosing the housing cavity **32**. Mounted on top of the housing **22** is a circuit board **42** containing the electronic circuitry for the switch **20**. The electronic cir-

cuitry contains a storage device or devices for holding angular coordinates related to intersecting points on closed curves between two opposing optical fibers. It also contain logic circuitry for validating requests to and functions of the switch and for generating interrupt commands for stopping switch functions and user error codes. Secured to the outside of the housing **22** adjacent to the end walls **26** and **28** are stepper motor brackets **44**. Secured to each bracket **44** is a stepper motor **46**. Extending from each stepper motor **46** is a shaft on which is secured a toothed spur gear **48**. Mounted on the outside of each end wall **26** and **28** is a photodetector bracket **50**. Mounted on each bracket is a photodetector **52** having a light emitting element and a light sensitive element.

A bore **54** is formed in each of the end walls **26** and **28**. Bearings **56** are press fit into each bore **54** from the cavity **32** side of the end walls **26** and **28**. Bearings **58** are also press fit into the bearing supports **36**. Flange shaft seals (not visible in this figure) are mounted within each bore **54** from the outside of the cavity **32** and held in place by seal plates **60** mounted on the outside of the end walls **26** and **28**. Extending through the seal plates **60**, the flange shaft seals, and bearings **56** and **58** are rotatable drive shafts **62** having a central bore **64** for receiving input and output optical fibers **66** and **67**. Mounted on each drive shaft **62** are slotted wheels **68** having a slit **70** formed therein. A portion of each slotted wheel **68** is positioned within a gap between the light emitting element and the light sensitive element of the photodetector **52**. Also mounted to the rotatable drive shafts **62** are drive shaft spur gears **72** which engages the respective toothed spur gears **48** of the stepper motor **46**. Secured to one end of each of the drive shafts **62** are flexible drive shaft couplings **74**. Within the other end of the flexible couplings **74** are mounting members (not visible in this drawing) that hold the optical fibers **66** and **67** of the switch **20**. Spring clamps **76** are mounted on the central pedestal **34** for hold the mounting members within offset V-grooves formed in the pedestal **34**. The spring clamps **76** and the offset V-grooves form the holder assemblies for the mounting members, which will be described in greater detail below. The enclosed cavity **32** may be filled with an appropriate index matching fluid to reduce back reflections of the input light passing between the input fiber and output fiber. The index matching fluid also acts as a lubricant for the V-grooves and the bearings **58**.

The housing **22**, removable sidewall **38**, and top plate **40** may be made of such materials as milled aluminum, stainless steel, or molded plastic. In the current design, these parts are milled aluminum. The rotating means in the form of the stepper motor **46** needs to achieve 0.14 degrees of rotational accuracy, be inexpensive, use relative little power and be small. An example of such a stepper motor **46** is manufactured and sold by HSI, Inc, Waterbury, Conn. under part number HSA33700. This particular stepper motor has an angular control specification to 0.09 degrees. Since the backlash is large for this particular motor a home position indicator is provided with the photodetector **52** and the slotted wheel **68**. The photodetector **52** may be any commonly available device, such as the Sharp GP 1L01F manufactured and sold by Sharp Corp., Camus, Wash. that generates an electrical signal when light passes from the light emitting element to the light receiving element. The slotted wheel **68** may be made of any appropriate material having adequate rigidity and capable of having a narrow slot formed in it. In the preferred embodiment, the slotted wheel **68** is formed from a 1 mil polycarbonate film having a 0.001 inch slot **70** formed therein. The film is laminated onto an aluminum stiffening plate. As an alternative to the steppers motors **46**, DC motors having high resolution encoders may be used. The ferrule drive shalt **62** may be formed of any appropriate material that is substantially rigid and resistant to wear. In the preferred embodiment, the rotatable drive shaft **62** is a stainless steel rod having an outside diameter of one-forth of an inch. The central bore **64** has a diameter of one-tenth of an inch.

Referring to FIG. **4**, there is shown a perspective view of the mounting member drive system for the mechanical optical switch **20**. The drive system includes input and output sections **80** and **82** which are essentially the same with the exception of the positioning of the optical fibers within the mounting member, which will be described in greater detail below in relation to ferrules **86**. The elements of the output section **82** are essentially the same as the input section **80**. The output section **82** has the rotatable drive shaft **62** on which is mounted the slotted wheel **68** and the drive shaft spur gear **72**. The drive shalt **62** passes through seal plate **60**, the flange shaft seal **94**, and bearings **56** and **58**. Attached to one end of the drive shalt **62** is the flexible drive shaft coupling **74**. The flexible coupling **74** is provided to reduce the lateral torque being applied to the ferrules **86** during rotational movement, which would cause misalignment of the optical fibers in the switch **20**. An appropriate flexible coupling may be obtained from Servometer Corp., Ceder Grove, N.J. under part number FC-9. Secured to the opposite end of the flexible coupling **74** is ferrule **86** contained in a ferrule assembly **88**. Within each ferrule **86** are secured the optical fibers **66** and **67** of the switch **20**, which are in intimate opposing relationship to each other. To maintain this relationship, clamp collars **96** are mounted on the ferrule drive shafts **62** on either side of the inner bearings **58** to compress the flexible coupling **74** to keep the end faces of the ferrules **86** in compression.

Referring to FIG. **5**, there is shown an exploded perspective view of the mounting member drive assembly. Elements in this figure are numbered the same as like elements in the previous figures. The ferrule assembly **88** consisting of a ferrule coupler **90** and the ferrule **86**. In the preferred embodiment the ferrule coupler **90** is made of stainless steel but other suitable materials may be used. Alternately, a ferrule strain relief **92** may be secured within the ferrule coupler **90**. A representative ferrule strain relief **90** may be purchases from Stimpson Co., Inc., Bayport, N.Y., under part number A3215. The ferrule **86** is secured in the ferrule coupler **90**. The ferrule **86** is formed of a borosilicate industrial optics glass. A representative type of ferrule is the HC type manufactured and sold by Nippon Electric Glass, Des Plaines, Ill. This particular type of ferrule has an outside diameter tolerance of ±5 microns, an out of roundness specification of ±1 micron, and inside diameter tolerance of ±2 microns. As was previously described, using a ferrule with these tolerances in prior art optical switches would not provide the cycle-to-cycle repeatability, long, term repeatability, and absolute alignment required for a workable mechanical optical switch. However, applicant's mechanical optical switch **20** overcomes the mechanical tolerance problems of current mechanical optical switches by offsetting the ferrules **86** so as to rotate about independent axes instead of coaxially aligning and rotating the ferrules about a single axis as in the prior art.

Referring to FIG. **6**, there is shown a representation of two opposing ferrules **100** and **102**, rotating on independent axes **104** and **106**, with each ferrule **100** and **102** containing an optical fiber **108** and **110** acting as an optical transmission path. In the preferred embodiment, the optical fibers are single-mode fibers having a core diameter of approximately

10 microns and an outside diameter of 125 microns. Other optical transmission paths may also be used, such as multimode optical fibers without departing from the scope of the invention. The opposing optical fibers **108** and **110** are positioned to move along closed curves **112** and **114** as the ferrules **100** and **102** are rotated. The close curves **112** and **114** intersect at points **116** and **118** on the respective curves. Assuming the curves **112** and **114** remain closed throughout the 360 degrees of rotation of the ferules **100** and **102**, the intersection points **116** and **118** will be stable and will accurately represent the optimum alignment position for the two opposing fibers **108** and **110**.

Referring to FIGS. **7**A and **7**B, there are shown end views of one of the two offset holder assemblies **120** formed or mounted on the pedestal **34** of the mechanical optical switch **20**. Each holder assembly **120** has a V-groove structure **122** having an apex **124** and angularly extending sidewalls **126** and **128** forming a V-shaped cavity **130**. Bonded to the sidewalls **126** and **128** are thin strips of wear resistant material **132** and **134**, such as glass, ceramic, or the like. Configuring the holder assembly **120** in this manner allows the V-groove structure **122** to be formed from inexpensive materials, such as aluminum, plastic, or the like, while at the same time providing an extremely durable bearing. A more expensive, but possible design could use V-grooves made directly from the wear resistant material.

Ferrules **86**, shown considerably out-of-round for illustrative purposes only, are respectively received in each of the V-groove cavities **130** formed on the pedestal **34**. Spring clamps **76** are positioned over the cavities **130** to secure the ferrules **86** in the V-groove structures **122**. The sidewalls **126** and **128** of each V-groove structure **122** provide two contact points for the ferrule **86** while the spring clamp **76** provides the third. This three-point mount is kinematically correct. A kinematic mount used in this specification means a mount with all forces resolved through a concurrent point. The retaining surfaces, the sidewalls **126** and **128** and the spring clamp **76**, are tangent to the surface of the ferrule **86**, resulting in a minimum energy configuration that is very stable, even when the ferrule **86** is not perfectly round. This compares to the prior art switches where the number of contact points is unknown, and varies from switch to switch, even during rotation. The spring clamp **76** in each holder assembly **120** is easily capable of small motion, so it can accommodate thermal expansion of the ferrule **86** or any out-of-roundness without slop (random movement) of the ferrule itself, Even if the ferrule **86** is considerably out-of-round the fibers inside the ferrule will still trace out closed curves. This eliminates any wobble caused by the dimensional variations between ferrules, as exhibited in prior art mechanical optical switches. It should be noted that the practice of this invention is not limited strictly to the V-groove structure and clamp configuration and other kinematically correct holder assemblies may be used without departing from the scope of the invention.

Bearing wear is a critical problem for any mechanical optical switch **20**. The bearing wear on the V-groove structure **122** occurs only along a infinitesimally thin line on each sidewall **126** and **128** surface. However, wear on the ferrule **86** occurs along its entire surface. Assuming the thickness of the material removed through wear is inversely proportional to the surface area of the bearing, the wear rates on the V-groove structure **122** should be hundreds or thousands of times greater than those of the ferrule **86**. Bonding the wear resistant strips **132** and **134** to the sidewalls **126** and **128** reduces the wear on the V-groove structure **122**. Additionally, control of the switch can be designed so, on the average, both ferrules **86** rotate the same number of degrees during any 100,000 cycles. This would in theory result in even wear rates for both V-groove beatings so that the ferrules **86** settle into the respective V-groove structures **122** by the same amount, thus preserving their relative alignment.

Referring to FIG. **8**, there is shown a perspective view of the offset V-groove holder assemblies **120** formed on the pedestal **34** of the mechanical optical switch **20**. Mounted in the V-grooves **140** and **142** are input and output ferrules **144** and **146** containing input and output optical fiber arrays **148** and **150**. Each fiber array **148** and **150** may be formed of a single optical fiber **152** or multiple optical fibers. The outer walls of the ferrules **144** and **146** and the spring clamps **76** are not shown for clarity. The wear resistant strips **132** and **134** are shown in the currently preferred configuration where the separate wear resistant strips are bonded to the opposing ends of the sidewalls **126** and **128** of the V-grooves **140** forming a double ended bearing for the ferrules **144** and **146**. The spring clamps **76**, as shown in FIG. **3**, are slotted to form first and second spring clamp members positioned over each set of wear resistant strips for securing the ferrules **144** and **146** in the V-groove cavity **130**. Alternately, the wear resistant strips **132** and **134** may be configured to line the complete sides of the V-grooves **140**. As is shown in the figure, the input ferrule **144** is slightly offset from the output ferrule **146**. Because each ferrule **144** and **146** is highly constrained in its kinematically correct holder assembly **120**, each fiber **152** of the input fiber array **148** traces out a closed curve when the input ferrule **144** rotates. These closed curves are approximately circles, but the actual shapes of the curves are not important. The curves could be ellipses, or any similar shaped closed curve. The same thing applies to the optical fibers **152** in the output fiber array **150**. As was described with reference to FIG. **6**, the closed curves of the optical fibers **152** in the input and output fiber arrays **148** and **150** are not concentric. That is any optical fiber **152** positioned to move on a closed curve in the input fiber array **148** will not be mirrored by any optical fiber **152** positioned to move on a closed curve in the output fiber array **150**. The V-grooves **140** and **142** are deliberately offset in order to throw any input optical fiber closed curve out of concentricity with any output optical fiber closed curve.

Because the closed curves of the respective input and output optical fiber arrays **148** and **150** are not concentric, they intersect at exactly two points. It is because of this fact that perfect alignment is achieved between the optical fibers **152** of the input optical fiber array **148** and the optical fibers **152** of the output optical fiber array **150**. Because there is no wobble or slop in the ferrule bearings, the kinematically correct holder assemblies **120**, the curves are really closed, and because they are closed the angular coordinates of the intersection points are stable. This means that, for some angular coordinates of the input and output ferrules **144** and **146**, an optical fiber **152** of the input fiber array **148** comes into perfect alignment with an optical fiber i **52** of the output fiber array **150** at the intersection points. And, because the curves close, the angular coordinates are stable. They repeat over and over with extreme precision. Dynamically, if the trajectory of the system in phase space closes, then it is stable, periodic, and predictable. If the trajectory does not close, however, then the system can be chaotic.

Another important advantage is achieved by offsetting the input and output ferrules to rotate about independent and separate rotational axes. Each ferrules **144** and **146** may be loaded with any number of fibers **152**. Some of the fibers **152** will be located about the edge of the inside diameter of the

ferrules **144** and **146**, and some will be located toward the center. By offsetting the ferrules **144** and **146**, the closed curves scribed by the input fibers along the edge of the ferrule **144** can be made to intersect all of the output fibers of ferrule **146**, even those that are located more toward the center. To do this, the offset between the two ferrules **144** and **146** should nominally be such that the closed curve traced out by the input fiber intersect the center of the output ferrule to within a tolerance of ½ the fiber diameter. In prior art designs, output fibers that are located near the center cannot be connected to input fiber that are on the edge. This means that an N×N switch can be built with more of its fibers concentrated toward the center than would be possible with prior an mechanical optical switches. This is an important advantage and objective of the invention because the angular tolerance required to achieve a given alignment decreases as the fibers move further from the center of the ferrule. So, when the fibers are far from the center of the ferrule, it requires more accurate angular resolution of the apparatus that rotates the ferrules. This would require, for example, the use of more expensive stepper motors **46** in the prior art designs whereas, in the present invention, less precise and therefore, less expensive stepper motors **46** can be used.

Another advantage and objective of the present invention is that the optical fibers **152** in the input and output optical fiber arrays **148** and **150** may be randomly configured in the input and output ferrules **144** and **146**. That is, it is not necessary to arrange the fibers **152** in the array **148** and **150** in neat little patterns. Each fiber can follow its own closed curve. It make no difference to the operation of the switch, so long as the closed curves of all the input fibers **152** of the input fiber array **148** intersect the closed curves of all of the output fibers **152** of the output fiber array **150**. Compare this design to the prior art where something is required to hold the fibers against the surface of the inside diameter of the ferrule or position the fibers on a concentric circle. Furthermore, that something must be very accurately dimensioned or the fibers will not be held tightly, and this will affect the concentricity, diameter, and roundness of the circles these fibers should travel.

An objective of the present invention is to produce a mechanical optical switch **20** that is easy to manufacture. As has been previously described, the mechanical optical switch **20** does not require precise positioning of the individual fibers **152** of the input and output fiber arrays **148** and **150** in the input and output ferrules **144** and **146** of the switch **20**. The switch **20** of the present invention maybe configured as a 1×N switch having a single input port and multiple output ports or it may be configured as an N×N or N×M switch with multiple input ports and multiple output ports. In any configuration, the positioning of the optical fibers **152** is similar. In a 1×N switch, the input ferrule **144** is filled with optical fibers **152**. Epoxy is added to the ferrule **144** to fill the voids between the fibers **152**. All but one of the optical fibers **152** are then snipped at the end of the ferrule **144** leaving a single optical fiber **152** as the optical port. The same process is used for N×N and N×M optical switches with the exception that less or no fibers **152** are snipped. Likewise, the same process is used for producing the output ports for the switch **20**. The important fact here is that no precise positioning of the fibers **152** within the ferrules **144** and **146** is necessary. This substantially reduces the manufacturing costs of the switch **20**.

Alternately, a plug device may be used in forming the optical ports of the switch **20**. The plug is positioned in the ferrules **144** and **146** and the fibers **152** are positioned between the plug and the inside wall of the ferrules. Epoxy is used to fill the ferrules **144** and **146**. In either process, the ends of the ferrules **144** and **146** containing the fiber **152** are then ground and polished.

The input and output ferrules are then mounted in the holder assemblies **120** of the switch **20** and connected to the flexible couplings **74** of the ferrule drive system with the input and output fibers **66** and **67** (FIG. **3**) passing through the central bores **64** of the ferrule drive shafts **62**. It is worth noting that the assembly of the mechanical components of the switch is independent of the location of the optical fibers **152** in the input and output ferrules **144** and **146**. As an example, the slotted wheels **68** are mounted on the ferrule drive shafts **62** without regard to the position of the fiber **152** within the ferrules **144** and **146**. The positioning of the slots **70** in the wheels **68** to the photodetectors **52** establishes the starting reference points for the fibers **152** in their respective ferrules **144** and **146**. The sidewall **38** is secured to the housing **22** and the cavity **32** is filled with an appropriate index matching fluid. The top plate **40** is secured to the housing and the switch **20** is ready for the alignment process.

FIG. **9** shows an representative alignment fixture for determining the intersection points of the closed curves of the input optical fibers with the closed curves of the output optical fibers. It should be noted that any fiber **152** lying substantially on the axis of rotation of either of the ferrules **144** or **146** will not move on a closed curve but act as a point. For this reason, any fiber **152** on the axis of rotation of either of the ferrules **144** and **146** will not be used as an optical port. The alignment fixture has a controller **160**, such as a computer, a laser source **162**, either 1310 nm or 1550 nm, a single-mode coupler **164**, two optical power meters **166** and **168**, an electronic switch **170** and a bank of photodiodes **172**. The computer **160** controls both the optical switch **20** and the electronic switch **170**, and records the analog signals from the power meters **166** and **168**. The computer locates the angular alignment coordinates of each port on the optical switch **20** by following a procedure as exemplified by the flow chart of FIG. **10**. The threshold values in the procedure are not given since they may vary from fixture to fixture based on the laser light source used, the type of photodiodes employed and the type of power meters used.

The basic alignment procedure uses a mathematical model for coupling between two misaligned gaussian beams. This model is generally a good approximation for the optical transmission between misaligned single-mode fibers, since the fundamental modes of these fibers are nearly gaussian. The model assumes the two optical fibers are exactly identical, and that there is no longitudinal or angular misalignment between them. These assumption are valid since the ferrules **144** and **146** are ground and polished prior to installation in the switch **20** and clamp collars **96** are used to maintain the ferrules **144** and **146** in opposing contact. The mathematical model has previously been set forth in equation 1 where T is the optical transmission, x is the lateral offset between the two fibers and w is the $1/e^2$ radius of the irradiance profile of the fundamental mode. FIG. **11** illustrates this function plotted against a logarithmic scale. The function has a single maxima, obtained when the two fibers are exactly coaxial. The procedure locates this maxima by moving the first fiber, and then the second, in such a way as to maximize the optical transmission of the switch.

For the smooth curve shown in FIG. **11**, the iterative procedure in FIG. **10** steadily converges on the maxima, where the two fibers are in exact alignment. In the real world, however, the curve is lumpy below a certain level, so at low light levels the curve has local maxima that can fool the procedure. These local maxima ate much lower, by 20 to

30 dB, than the global maxima, so the procedure must not align to them, or the switch's insertion loss will be to high. This is the reason the procedure makes large steps (either clockwise or counter-clockwise) when the transmission is below some predetermined threshold, which may be called Local Maxima Threshold, or LMT. These small local maxima are generally only a few degrees wide, so by searching with 5 or 10 degree steps the procedure avoids them, finding its way above the LMT, usually within 5 degrees of the global maxima.

Although a preliminary search with large steps greatly diminishes the danger of inadvertently aligning the switch to the local maxima, the procedure is not fool-proof. As an extra precaution, the procedure checks the absolute transmitted power before deciding whether or not the port is properly aligned. If the absolute power is too low, but cannot be improved by adjusting the two motors (using the smallest step increment) then either the switch has a defective component, or it is aligned to a local maxima. If this happens, the procedure employs a special problem solving subroutine, labeled **1** in flow chart of FIG. **10**.

The problem solving subroutine will use information about how bad the transmission efficiency is, in order to conduct another search using increments that are larger than the stepper motor's smallest step, but smaller than 10 degrees. It is believed that the LMT can be adjusted so that these types if problems will be very rare, in which case the procedure may simply try to align another port, and leave the difficult ones for an experienced human operator.

When aligning switches with many ports, it may be impractical to try to align the ports sequentially. Instead, it may he simpler to examine each of the output ports, seeing which is closest to the input port by measuring the optical power at each of the photodiodes, and align that one first. After aligning the first port, the procedure could align the next closest port. Generally, this procedure will align the output ports out of sequence, but it will be faster, and the procedure can always re-number the ports after completing the alignment procedure.

The procedure starts with the controller **160** rotating the input and output ferrule drive shafts **62** to their home positions. Their home positions are electrical signals from the photodiodes **52** when the slots **70** of the slotted wheels **68** pass between the light emitting elements and the light receiving elements of the photodiodes. The procedure sets the electronic switch **170** to port **1**, box **180**, and rotates the input ferrule **144** to maximize the optical signal at the port **1** photodiode **172**. The output ferrule **146** is then rotated to maximize the optical signal, box **182**. If the optical signal is greater than the thresholds, box **184**, then the optical signal is maximized again by sequentially rotating stepper motors **46** for the input and output ferrules **144** and **146** using the smallest step increments, boxes **186** and **188**. These steps are repeated until the optical signal no longer increases, box **190**. If the insertion loss is within specifications, box **192**, then the port is aligned. The number of degrees each stepper motor **46** has turned from their respective home positions are stored in a memory located on the circuit board **42** mounted on the switch **20**. The electronic switch **170** is set to the next port and the ferrules **144** and **146** are set to the home position, box **194**, where the process is repeated for the next port, box **180**.

If the optical signal is less than the threshold after the first motor turning, box **184**, then the procedure turns motor **1** in the range of 10 degrees clockwise and maximizes the optical signal by turning motor **2**, box **196**. If the optical signal does not improve, motor **1** is turned in the range of 20 degrees counter-clockwise and motor **2** is turned to maximize the optical signal, box **200**. If the optical signal improves after the approximately 10 degree clockwise rotation or the approximate 20 degree counterclockwise rotation of motor **1** and the maximizing of the optical signal by turning motor **2**, boxes **198** and **202**, then the routine continues in the appropriate direction with maximizing the optical signal with motor **2**, boxes **204** and **206**. If the optical signal is greater than the threshold after this process, then the routine jumps to that portion of the procedure where motor **1** and **2** are turned using the smallest increment, boxes **186** and **188**. If the optical signal is greater than the insertion loss, box **192**, then the port is aligned, box **194**, otherwise the routine jumps to the special problem solving routine, box **186**. If after the clockwise and counter-clockwise rotations of the motors, the optical signal is less than the threshold, box **210**, then the routine jumps to the special problem solving subroutine, box **186**.

The procedure of FIG. **10** is designed to find one of the two intersecting points on the closed curves of the input and output optical fiber defining optical ports. The procedure could easily be modified to find both intersection points. This would be advantageous for faster switching between ports of the optical switch **20** in that the closest intersecting point of the designated ports could be more quickly accessed. Further, the procedure just described assumes a blind search, that is nothing is known about the locations of the fibers **152** within the ferrules **144** and **146**. An improved apparatus for and method of aligning fibers within ferrules **144** and **146** is shown in FIGS. **12** through **18**. The alignment fixturing consists of an analytical station **220**, shown in FIG. **12** and a measurement alignment station **230**, shown in FIG. **13**. The analytical station **220** includes a light source **221**, such as a frosted florescent light, and an optical microscope **222**, such as manufactured and sold by Buehler and used for examining the ferrules of fiber-optic connectors. The microscope is used with a 5× objective in the alignment implementation of the present invention. Depending on the number of fibers **152** in the input and output ferrules **144** and **146**, the objective may be larger or smaller. For example, a 10× or 20× objective may be used for a lower port count mechanical optical switch **20** whereas a 2× objective may be used for a high port count mechanical optical switch **20**. A black and white CCD camera **223**, such as Model No. KP-M1 manufactured and sold by Hitachi Denshi, Ltd. is coupled to the microscope **222**. The output of the CCD camera **223** is coupled to a video monitor **224**, such as manufactured and sold by Hitachi Denshi under Model No. VM920/VM921. The video monitor **224** output is coupled to a frame-grabber **225**, such as Computer EYES LPT, Model CAT-100. The output of the frame grabber **225** is coupled to a computer **226** containing Compute EYES frame grabber software. The measurement alignment station **230** includes a solid state laser **231**, such as a 1310 nm or 1550 nm laser used in telecommunications transmission equipment, power meters **232** and **233**, such the Model TFC200 Optical Power Meter manufactured and sold by Tektronix, Inc., and a computer **234**. The individual computers **226** and **234** may be connected together via a network or may be a single computer shared by both stations. Irrespective of the configuration of the individual computers **226** and **234**, the data output of the analytical station **220** is used by the measurement alignment station **230** for aligning the opposing fibers **152** within the ferrules **144** and **146**.

The analytical station **220** acquires images of the respective end faces of the input and output ferrules **144** and **146**

containing the optical fiber arrays **148** and **150** for determining the centers of each fiber **152** within the ferrules **144** and **146**, the axes of rotation of the respective ferrules **144** and **146** and the angular alignment coordinates of each fiber **152** within the respective ferrules relative to a reference point within each ferrule. The reference point for each ferrule is a fixed point within the ferrule that is discernable in the acquired images. In the preferred embodiment of the alignment procedure, the reference point is a multimode fiber, referred to hereinafter as the reference port. A multimode fiber is chosen because it is substantially larger in diameter than the single-mode fibers and is readily identifiable in the imaged end faces of the ferrules **144** and **146**. This makes it much easier to find and singularly identify the reference port than if it where a single-mode fiber. The need for consistent, even illumination across the fiber **152** cores for imaging affects the procedure for building the ferrules **144** and **146**. The same fiber array or bundle **235** is used for both the input and output ferrules **144** and **146** with the ferrules located at opposite ends of the fiber bundle **235** as shown in FIG. **12**. This allows easy illumination of the fiber **152** cores by simply pointing the opposite ferrule toward the diffuse light source **221**. After scanning the ferrules' images into the computer, the fiber bundle **235** is cut in the middle to separate the two ferrule assemblies. The fiber bundle **235** consists of a number of single mode fibers and the multimode reference fiber. In a 1×N optical switch, all but one single-mode fiber is cut at the input ferrule **144**. The measurement alignment station **230**, operating under program control, selectively rotates the input and output ferrules of the assembled switch to optimally align the fiber or fibers **152** of the input optical fiber array **148** with the fibers of the output optical fiber array **150**.

Referring to FIG. **14**, there is shown a flow chart for aligning the fibers **152** of the input and output optical fiber arrays **148** and **150** disposed in the input and output ferrules **144** and **146** and for determining the angular coordinates for each aligned input fiber with an output fiber. The first step **245** of the procedure is to place one of the ferrules in a simple fixture, patterned after the V-groove structure of the switch, mounted on the microscope **222** stage. For explanation purposes, the output ferrule **146** is described below.

The next step **246** is to acquire three images of the ferrule, with each image at approximately one hundred and twenty degrees rotated from its position in previous image. The images are digitized and stored in the computer **226** for analysis. For example, the output ferrule **146** is imaged in the three orientations with the input ferrule **144** illuminated by the light source **221** and the microscope **222** light off. The acquired images are nearly binary, consisting of the illuminated cores of the fibers **152** on a black background. Because of the binary nature of the images, the fiber cores are relatively easy to find and accurately located. A typical location error is on the order of one-half of a pixel, or about one micron using a 5× objective in the microscope **222**. FIG. **15** is an inverted image of the illuminated fibers **152** in the output ferrule **146**. The small spots **262** are the illuminated cores of the single-mode fibers and the single large spot **262** is the illuminated core of the multimode reference port or fiber. A corresponding image of the input ferrule **144** for a N×N mechanical optical switch **20** would look similar to the output ferrule **146** image. An image of the input ferrule **144** in a 1×N mechanical optical switch **20** would show a single small spot for the single input fiber. Using rotated images of one of the fibers within the ferrules finds the true axis of rotation, even if the ferrule's inside and outside radii are not concentric. The only requirement imposed on the input and output ferrules' geometry is that the outside radius be approximately round.

The next step two steps **247** and **248** locate the center of each fiber and the coordinates of the ferrule's center of rotation. The alignment procedure locates the center of each ferrule by analyzing one of the stored images of the ferrule. The procedure compares each stored pixel to a threshold value. Any pixel value greater than the threshold is then compared to its eight neighboring pixel values to determine if it is greater than any of its eight neighboring pixels. If so, the average center of illumination is determined the region around the pixel equal to the fiber core size. The average center of illumination for each local maxima above the threshold value is stored as the coordinates of the fibers **152**. The alignment procedure determines the true axis of rotation of the output ferrule **146** by analyzing the ferrule at different rotational orientations. The center of the multimode reference port **262** in the output ferrule **146** is determined for each of the three images and the center and radius of rotation is determined by solving the following three simultaneous equations:

$$(x_1-a)^2+(y_1-b)^2=r^2 \quad [4]$$

$$(x_2-a)^2+(y_2-b)^2=r^2 \quad [5]$$

$$(x_3-a)^2+(y_3-b)^2=r^2 \quad [6]$$

In these equations (x_1,y_1), (x_2,y_2), and (x_3,y_3) are the coordinates of the fiber core in the three images, (a, b) is the coordinate of the center of rotation and r is the radius of rotation. The solutions are:

$$b=\frac{(x_3-x_2)(x_1^2-x_2^2+y_1^2-y_2^2)-(x_2-x_1)(x_2^2-x_3^2+y_2^2-y_3^2)}{2((x_2-x_1)(y_3-y_2)-(x_3-x_2)(y_2-y_1))} \quad [7]$$

$$a=\frac{(x_2^2-x_1^2+y_2^2-y_1^2)+2(y_1-y_2)b}{2(x_2-x_1)} \quad [8]$$

$$r=\sqrt{(x_1-a)^2+(y_1-b)^2} \quad [9]$$

The above equations locate the coordinates of the axis of rotation for the ferrule **146** and the image analysis determines the locations of each fiber **152** in the microscope's coordinate system for the output fiber array **150**. A coordinate transformation determines the location of each fiber **152** in the output ferrule **146** in a coordinate system located on the rotation axis of the ferrule. Suppose that x_i and y_i are the coordinates of the i'th fiber in a general laboratory reference frame, while x_j and y_j represent their locations in a coordinate system centered on the ferrule's axis. Both coordinate systems are Cartesian, and their x and y axes are parallel. The coordinate transformation equations are:

$$x_j=x_i-a \quad [10]$$

$$y_j=y_i-b \quad [11]$$

where a and b represent the x and y coordinates of the center of the ferrule in the microscope's laboratory reference frame.

The next step **249** places the input ferrule **144** in the microscope **22** fixture. Three images of the end face of the input ferrules are acquired at three different rotational orientations and the three simultaneous equations are solved for (a,b) and r. The coordinates of the ferrule's axis of rotation is determined using either the multimode reference fiber **262** if the mechanical optical switch **20** is an N×N type switch or

the single-mode input fiber if the switch **20** is a 1×N type switch. The track radius of the input fibers or fiber, or the distance from the rotational axis of the input ferrule **144** to the input fiber's core, is determined.

The next step **250** is to calculate the radial coordinates of each fiber core **260** relative to the center of the ferrule **146** and to calculate the relative change in alignment coordinates for each fiber relative to the reference fiber **262**. The offset distance of the V-grooves, which in turn is the offset distance of the ferrules, is approximately known from the specifications of the switch or can be measured directly with a micrometer. In addition, a convention for positive and negative rotation of the ferrules is defined. Positive rotation is defined as a counter-clockwise rotation when looking at the optical interface of either ferrule. Negative rotation is defined as clockwise rotation. The positive x-axis and y-axis have their origins at the center of the output ferrule with the x-axis extending to the right and y-axis extending upward at ninety degrees to the x-axis. In this convention, when both ferrules are rotating through positive angles in their own coordinate systems they are counter-rotating at the optical interface because they face in opposite directions.

The radii of the tracks on which each of the output fibers rotates and the angle between the line joining each fiber to the x-axis is determined by the following equations (with angle in degrees):

$$r_i = \sqrt{(x_i^2 + y_i^2)} \quad [12]$$

$$\theta_i = a\tan\left(\frac{y_i}{x_i}\right) \text{ if } x_i > 0 \text{ and } y_i > 0 \text{ (points are in the first quadrant)} \quad [13]$$

$$\theta_i = a\tan\left(\frac{y_i}{x_i}\right) + 180 \text{ if } x_i < 0 \text{ and } y_i > 0 \text{ (points are in the second quadrant)} \quad [14]$$

$$\theta_i = a\tan\left(\frac{y_i}{x_i}\right) + 180 \text{ if } x_i < 0 \text{ and } y_i < 0 \text{ (points are in the third quadrant)} \quad [15]$$

$$\theta_i = a\tan\left(\frac{y_i}{x_i}\right) + 360 \text{ if } x_i > 0 \text{ and } y_i < 0 \text{ (points are in the fourth quadrant)} \quad [16]$$

A further rotational transformation of the coordinates of the output fibers is performed so that the multimode reference fiber or port is positioned on the positive x-axis. The x-y coordinates of all the output single-mode fibers are calculated in this new reference frame. The same procedure is used for the input fibers in a N×N mechanical optical switch.

The next step **251** uses the estimated value of the ferrule offset to calculate relative switch coordinates from the reference multimode port. FIG. **16** illustrates the alignment condition for an arbitrary input fiber. The distance between the centers of the two ferrules is the V-groove offset d when the ferrules having the same outside diameters. Ferrules of unequal diameters may be used without departing from the teaching of the invention. Points **264** and **265** are respectively the center of the output ferrule and the center of the input ferrule. Point **266** is the intersection point on the closed curves of the input fiber with one of the output fibers. From the geometry of triangles, the following equations are derived:

$$r \times \sin(\theta 1) = R \times \sin(\phi 1) \quad [17]$$

$$R \times \cos(\phi 1) = d - r \times \cos(\theta 1) \quad [18]$$

Solving equations 17 and 18:

$$\theta 1 = \frac{\pi}{2} - a\sin\left(\frac{d^2 - R^2 + r^2}{2dr}\right) \quad [19]$$

$$\theta 1 = a\sin\left(\frac{r \times \sin(\theta 1)}{R}\right) \quad [20]$$

Equations [19] and [20] give the alignment conditions for each fiber relative to the positive x-axis. Since each fiber's polar coordinates are known, the alignment coordinates for each fiber relative to the alignment coordinates of any other fiber can be calculated. The relative switch coordinates are passed to the measurement alignment station **230** where they are stored in computer **234** and used as the starting values for peaking the alignment of the input fibers or fiber with the output fibers.

As previously described, the fiber bundle **235** has the input and output ferrules **144** and **146** disposed at either end and contains the single-mode fibers and the multimode reference fiber and is cut in half after the alignment station steps. The ferrules are secured in the mounting members of the mechanical optical switch **20** and connected to the drive motors on the switch **20**. The assembled switch is connected to the measurement alignment station **230** in step **252** with a laser source **23 1** coupled to the input single-mode fiber **235** as shown in FIG. **12**. The single-mode fiber bundle **236** and the reference fiber **237** are respectively connected to the power meters **232** and **233**. Power meter control cables **238** and **239** connect the power meters to the computer. A switch control cable **240** connects the optical switch to the computer. Step **252** further includes aligning the multimode reference port or fiber with the input single mode fiber using a blind search routine as shown in FIG. **17**.

The input and output ferrules **144** and **146** are assembled in mechanical optical switch **20** without respect to the location of the reference port **262** and the input fiber to the home position sensors **52** of the switch **20**. On initial power-up of the mechanical optical switch **20**, the drive motors **46** coupled to each ferrule rotate to the home position defined by the sensors **52**. The blind search routine may be initialized at this point to a Home-Away-From-Home position, which is one hundred and eighty degrees from the home position, but to speed-up the search an operator may manually control the motor rotation to position the input single-mode fiber and the reference fiber in the same quadrant. The blind search routine starts with both the input ferrule **144** and the output ferrule **144** at the arbitrary start position (ASP) or the Home-Away-From-Home (HAH) position, block **270**. In the below description of the blind search routine, the degrees of rotation at each step are illustrative and may be adjusted for some steps as experience dictates. In addition, the degrees of rotation will be a function of the number of single-mode fibers in the output ferrule **146**. Further, even though the routines describe degrees of rotation, the actual data saved for the angular coordinates of the aligned fibers is in motor steps. The output ferrule is rotated through five to fifteen degree of rotation in block **271** and the output optical power from the reference fiber is measured and compared to a threshold in decision block **272**. If the optical power output does not exceed the threshold and the output ferrules has not exceeded **360** degrees of rotation from the ASP or HAH position as shown in decision block **273**, then the routine loops back and rotates the output ferrule by another five to fifteen degrees of rotation, block **271**. If the output ferrule has exceeded the **360** degrees of rotations, then the output ferrule is reset to the ASP or HAH position and the input ferrule is rotated by five to fifteen degrees of rotation as shown in block **274** and

the output ferrules is again rotated by five to fifteen degrees, block **271**. The input and output ferrules are rotated until the output power measured by the optical power meter exceeds the threshold whereupon a peaking routine is executed, block **275**.

The peaking routine, shown in FIG. **18**, starts by defining the input ferrule equal to one and clockwise rotation equal to one as shown in blocks **281** and **282**. The current stepper motor coordinates are defined as the best coordinates as shown in block **282**. The assumption is that there is some light coupled from the input fiber to the output fiber. The routine is initialized by defining the current stepper motor coordinates as the last best coordinates and setting a variable N to zero as shown in block **284**. The routine initializes the ferrule to minus one and the rotation to minus one in block **285**. That is, the output ferrule is rotated in a counter-clockwise direction on the first peaking pass. The routine starts with rotating the output ferrule in a counter-clockwise direction to determine the coordinates having the maximum amount of optical power coupled from the input fiber to the output fiber. The coordinates are saved as the best coordinates. These steps are shown in blocks **286** through **289**. The routine continues past the best coordinates for two more steps, block **290**, and then starts to rotate the output ferrule in a clockwise direction by setting N equal to one and the rotation equal to minus one, blocks **291** and **292**.. The routine determines the coordinates having the maximum amount of Optical power coupled to the output fiber for the clockwise rotation of the output ferrule and saves the coordinates as the best coordinates, repeating blocks **286** through **289**. With n equal to one the routine goes .to the best coordinates, block **293**, and compares the best coordinates to the last best coordinates, block **294**. If they are not the same for both motors, the routine loops back through the routine, blocks **283** and **284** to redefine the current stepper motor coordinates as the best coordinates and the current stepper motor coordinates as the last best coordinates and reset N equal one. What has changed in the coordinates is the output ferrule stepper motor coordinate. The routine then switches to the input ferrule by setting the ferrule to a positive one (−1 ×−1=1), block **285**. The input ferrule is rotated in both the counter-clockwise and clockwise direction to determine the best coordinate for the input ferrule, repeating blocks **286** through **292**. After the best coordinate for the input ferrule is determined the routine compares the best coordinates to the last best coordinates, block **294**, to determine if they are the same for both motors. If the result is yes, the routine determines if both motors have cycled, block **295**. If the results yes, the best coordinates are saved as the optimum alignment positions for the input fiber and the selected output fiber, block **296**. The routine then returns to the blind search routine or the routine that called it. The blind search routine then returns to the alignment routine. The number of steps from the home position of each stepper motor to the alignment point is saved as the coordinates of the intersection point.

The alignment routine proceeds to the coordinates for port number two, step **253**, which is the first single-mode fiber, and uses the peaking routine previously described, to determines the optimum coordinates for maximum light throughput from the input fiber to the output fiber. The routine recalculates the ferrule offset using the alignment data from port two, step **254**. Equation [19] gives θ1 as a function of r, d, and R. Although θ1 is not known, the change in θ1 is known as a function of aligning port two using the peaking routine. The change in **01** is the difference between the calculated angular coordinate for port two and the alignment coordinate found using the peaking routine. The assumption is that the error is due to the estimate of the offset d, and as such the derivative of equation [19] can be used to estimate a correction factor for the offset. Using the correction factor, the value of offset d can be altered and new alignment coordinates can be recalculated for the fibers. This procedure may be followed each time a new port is aligned, until the changes in alignment coordinate falls below some preset threshold.

Taking the derivative of equation [15] with respect to d, rearranging, and replacing differentials with deltas:

$$\Delta d_i = \Delta\theta \times d_{est} \frac{\sqrt{(-d_{est}^4 + 2d_{est}^2(R^2 + r_i^2) - R^4 + r_i^2(2R^2 - r_i^2))}}{d_{est}^2 + R^2 - r_i^2} \quad [21]$$

The routines goes to the calculated coordinates for port three, step **255**, and aligns the port with the input fiber using the peaking routine. The routine again recalculates the ferrule offset using the port three alignment coordinates and recalculates the relative alignment coordinates for all the other ports relative to port three, step **256**. The routine goes to the next port and each succeeding port and aligns the fibers using the peaking routine, step **257**. Each time a port is aligned the routine determines if it is the last port, step **258**. When the last port has been aligned, the routine stops, step **259**. The stored best coordinates for each of the aligned ports are read into memory circuits on the switch and stored. The switch **20** is now ready for use.

As has been previously described, the mechanical optical switch of the present invention may be configured with any number of input and output fibers or ports. The basic operation of the switch is to rotate the input or first optical fiber on its closed curve to one of the two intersecting points on its closed curve in response to the angular coordinate representative of the position of fiber at the intersecting point matching the intersecting point of the second optical fiber. The output or second optical fiber is rotated on its closed curve to the intersecting point corresponding to the intersecting point of the first fiber in response to the angular coordinate representative of the position of the second fiber at the intersecting point. These rotational movements may be performed sequentially, but in the preferred embodiment they are performed simultaneously. Since the offset closed curves intersect at two unique points, the speed of the switch may be increased by selecting the intersecting points closest to the input and output fibers prior to rotating the fibers.

Testing has shown that one ferrule can move the other when it rotates in the same sense as the other, after the other ferrule has stopped rotating. To overcome this problem each fiber is rotated past the selected intersecting point by the same amount and then both are counter-rotated simultaneously and stopped at the same time at the intersecting point. Testing has also shown that one or both of the input or output rotating sections of the switch can continue turning their drive lines until the fiber break or the motors stall. The switch has been configured to generate an interrupt signal when either of the motors drive the drive line assemblies more than one or one and one/half times from their respective home positions. The reflectors or slotted wheels attached to the respective drive line assemblies pass light to the respective detectors at the home position. A user error code is generated when this condition occurs and the motors stops.

An invalid fiber or port request can be issued to the switch. For this reason, each input and output fiber or port selection is validated prior to rotating the input or output

sections of the switch. Maximum limits are set for the input and output sections based on the number of fiber in the respective sections. If the fiber or port request exceeds the maximum limits, a user error code is generated and the sections remain stationary.

In switch configurations where the input and output sections have multiple fibers or ports, individual fibers are selected for either the input or output sections prior to rotating the sections. It is possible when selecting a new fiber or port for the maximum fiber or port position to be exceeded. To prevent this condition from damaging the switch, the angular coordinate to the intersecting point of a newly selected fiber or port is summed with the angular coordinate of the intersecting point of the previously selected fiber or port. The summed angular coordinate value is compared to a maximum range value and a user error code is generated when the summed angular coordinates exceed the maximum range value. The angular coordinates in the preferred embodiment are stored as steps of the stepper motor.

Referring to FIG. **19**, there is shown a perspective view of an improved mechanical fiber optical switch **300** according to the present invention. Switch **300** has a housing **302** having abase **303**, end walls **304** and **306** and sidewalls **308** and **310** forming a cavity **312**. Disposed within the cavity **312** is a central pedestal **314** of similar design to the pedestal **34** in FIG. **3**. Holder assemblies having a similar design to the holder assemblies in FIGS. **7**A and **7**B are formed in the pedestal **314**. The holder assemblies include offset V-grooves and spring clamps for holding the mounting members **350**. A recess **316** is formed in the top of the housing **302** for receiving a gasket (not shown). The gasket is secured in the recess **316** by a top plate (not shown), which is similar to the top plate **40** in FIG. **3**. Like the switch **20** in FIG. **3** a circuit board (not shown) containing electronic circuitry is mounted on the switch housing **302**. The cavity **3 14** is enclosed by the top plate and may be filled with an appropriate index matching fluid to reduce back refections of the input light passing between the input fibers **315** and output fibers **317**.

Drive motors **318** and **320**, such as stepper motors or DC motors with encoders, are secured to the sidewall **310** by motor clamps **322** and **324**. Gear clamps **326** and **328** secure toothed spur gears **330** and **332** to the drive motor **318** and **320** shafts. Bores **334** and **336** (bore **336** being visible) are formed in the respective end walls **304** and **306** for receiving mounting member drive line assemblies **338** and **340**. Mounted on the base **303** are detector brackets **342** and **344** for mounting reflective sensors **346** and **348**, such as manufactured and sold by Honeywell, Inc., Minneapolis, Minn., under part number HOA1160.

The housing **302**, the top plate, motor clamps and detector brackets may be made of the same material as the housing **22** in FIG. **3**. In the improved design these parts are milled or formed aluminum. The drive motors **318** and **320** are stepper motors manufactured and sold by HSI, Inc. Waterbury, Conn., under part number 33755-01. The gear clamps **326** and **328** used in the current design are manufactured and sold by W. M. Berg, Inc., East Rockaway, N.Y. under part number CG1-25-A. The toothed spur gears are manufactured and sold by PIC Precision Industrial Components Corp., Middlebury, Conn. under part number H47-72.

Referring to FIG. **20** there is shown a plan view of the opposing mounting members and one of the two similarly designed mounting member drive lines **338** and **340**. The mounting member drive line has a mounting member **350**, such as a ferrule or the like, having one end coupled to a strain relief coupling **352**. The other end of the mounting member **350** has a sleeve member **354** secured thereto, the purpose of which will be described in greater detail below. Coupled to the other end of the strain relief coupling **352** is a flexible drive shaft coupling **356**, such as a flexible bellows manufactured by Servometer Corp., Ceder Grove, N.J., under part number FC-1. For use in the mechanical fiber optic switch of this design, the stock couplings of the bellows have been replaced and the interior bore has been enlarged. One end of the flexible drive shaft coupling **356** fits into the end of the strain relief coupling **352** and the other end fits over a drive shaft **358**. The drive shaft is a stainless steel part, such as manufactured by PIC Precision Industrial Components Corp., Middlebury, Conn. under part number A3-23 or by W. M. Berg, Inc., East Rockaway, N.Y., under part number S4-23. Mounted on the drive shaft **358** is a retaining ring **360**, such as manufactured by W. M. Burg, Inc. under part number Q7-25. Mounted on the drive shaft **358** next to the retaining ring **360** is an inner race spacer, such as manufactured by W. M. Berg, Inc., under part number SS2-32. Bearings **364** and **366**, such as manufactured by W. M. Berg, Inc. under part number B1-31-Q3, are mounted on the drive shaft **358** next to the spacer **362**. Positioned between the bearings **364** and **366** is a beating spacer **368**, such as manufactured by W. M. Berg, Inc. under part number SS2-65. Positioned on the drive shaft **358** adjacent to the bearing **366** is an outer race spacer **370**, such as manufactured by W. M. Berg, Inc. under part number SS3-13, which is followed by another retaining ring **372**, such as manufactured by W. M. Berg, Inc. under part number Q4-50. A seal **374**, such as manufactured by Bal Seal Engineering Co., Inc., Santa Ana, Calif. under part number R315LB-202-SP-45, is positioned adjacent to the retaining ring **372**. The end of the seal **374** opposite the retaining ring **372** has a flange **376**, which fits into a recess formed in the outer surface of the end walls **304** and **306** and surrounds the apertures **334** and **336**. A seal cover **378** and an outer race spacer **380** are positioned against the seal **374**. The seal cover and the outer race spacer **380** have coextensive apertures formed therein for receiving screws or the like. The seal cover **378** and the outer race spacer **380** are secured to the outer surface of the end walls **304** and **306** with the screws for securing the seal **374** in the housing **302**. Positioned on the drive shaft **358** adjacent to the outer race spacer **380** is a bearing **382**, such as manufactured by W. M. Berg, Inc. under part number B1-31-Q3, and another inner race spacer **384**, such as manufactured by W. M. Berg, Inc. under part number SS2-30. A toothed spur gear **386**, similar to the gears **330** and **332**, are mounted on the drive shaft **358** and secured thereto by gear clamp **388**, similar to gear clamps **326** and **328**. A reflector code wheel **390** is mounted on the end of the drive shaft **358** in line with one of the reflective sensors **346** or **348**. The improved simplified drive line has fewer coupling joints compared to the drive line in FIGS. **4** and **5**. Further, all couplings are either bonded with an epoxy, such as TRA-Bond BA-F230 epoxy or Epo-tek 353ND epoxy, or clamped in place with a split-hub restraining device.

As previously described with regard to the mounting member ferrule **86**, mounting member ferrule **350** may be formed of a borosilicate glass. Extensive testing of the mechanical fiber optic switch of the present invention has shown that the end-faces of the glass ferrules **350** were wearing against each other. This wear resulted in damaged fibers at the optical interface. Sometimes the fibers also became contaminated by wear particles. The problem exhibited itself as a gradual, but sometimes erratic, increase in

switch insertion loss. The cross-sectional view of FIG. **21** along line A—A' of FIG. **20** shows how the use of ceramic sleeves **354** resolved this problem. The ceramic sleeves **354**, such as manufactured and sold by Mindurm Precision Products, Rancho Cucamonga, Calif., are epoxied to the end faces of the glass ferrules **350**. The ferrule, populated with optical fibers, and the sleeves **354** are polished as a monolithic part. Since the ceramic is much harder than the glass, it polishes more slowly. This results in an under-polish **392**, with the surface of the glass roughly 11–15 microns below the surface of the ceramic. Consequently, the glass ferrules do not tough at all as representatively shown in FIG. **21**. The ceramic sleeves keep the ferrules separated by about 25 microns. Additionally, since the ceramic wears much better than the glass, there are fewer wear particles to cause problems with contamination. An alternative to using ceramic sleeves with glass ferrules, is to replace the glass ferrules with ceramic ferrules, such as manufactured and sold by Rikei of America, Cupentino, Calif. Less under polishing of the fibers will occur with the ceramic ferrules but this may be advantageous in slightly reducing the insertion loss due to less longitudinal misalignment. A preferred material for use in forming the ceramic sleeves **354** and the ceramic ferrules is zirconium oxide having a fracture toughness of 8 MPa*m^½.

Another problem discovered during the extensive testing of the mechanical fiber optic switch of the present invention was that the ferrules were differentially wearing into the V-grooves too fast, causing the switch to go out of alignment. This problem exhibited itself as a gradual increase in insertion loss, punctuated occasionally by sharp changes in the insertion loss. A solution to this problem is lining the V-grooves and the spring clamps with wear resistant ceramic inserts of zirconium oxide similar in composition to the ceramic sleeves **364** and ferrules **350**. Sapphire inserts, used with the glass ferrules, may also be a solution to this problem.

A further problem was encountered in bonding the wear resistant quartz inserts in the V-grooves. Hard and rigid bonding agents, such as epoxies, cause the inserts to warp. To prevent the epoxies from warping the inserts, the thickness of the inserts were increased to 0.062 inches thick. This has greatly reduces the amount of warping.

A further embodiment of the mechanical optical switch **20** is to add a photodiode within the switch **20** proximate to the interface between the input and output fiber arrays **148** and **150**. The photodiode monitors the amount of light scattered near the optical interface between the arrays **148** and **150** and generates an electrical output as a function of the misalignment of the various ports of the switch **20**. A minimum electrical signal from the photodiode indicates the maximum alignment between the selected input and output ports. Including the photodiode in the mechanical optical switch **20** permits active alignment of the ports after it has been put in use. This can extend the useful life of the switch **20**.

Having aligned the ports of the switch **20**, it is now usable in remote fiber test systems. It is envisioned that such systems are part of a central office system of a telecommunications company as is representatively shown in FIG. **22**. The central office **400** has a central office switch **402** coupled to optical fiber links **404**, **406**, and **408**, which are connected to other central office switches **410**, **412**, and **414** in remote central offices **416**, **418**, and **420**. The optical fiber links **404**, **406**, and **408** consist of optical transmission fibers for carrying optical communications and an optical test fiber, also called a "dark fiber" in the industry. The optical switch **422** of the present invention is tied into the central office switch **402** as part of a remote fiber test system. The test system includes at one measurement test instrument **424**, such as an optical time domain reflectometer (OTDR), an optical power meter, SDH/SONET test set, or the like coupled to the input port or fiber of the switch **422**. The output fibers or ports of the switch **422** are coupled to the optical fiber links **404**, **406**, and **408** via optical couplers **426**, **428**, and **430**. Couplers **426**, **428**, and **430** may be wavelength division multiplexers (WDM).

In one application, the WDMs **426**, **428**, and **430** are coupled to the "dark fibers" in the optical fiber links **404**, **406**, and **408** and the measurement test instrument **424** is an OTDR. A central office computer passes commands to the switch **20** over a bus for connecting a particular input port to a particular output port. The electronic circuitry on the switch **20** interprets the command and accesses the stored coordinate positions for the selected ports and rotates each port to the intersection point on the closed curves of the ports. Commands are sent to the optical switch **422** to align a particular output fiber or port with the input fiber or port coupled to the OTDR **424**. For example, output port **1** of the switch **424** maybe coupled to the "dark fiber" of the optical fiber link **404** through WDM **426**. The OTDR **424** launches optical pulses into the "dark fiber" and the return reflected optical backscatter signal is coupled to the OTDR **424** through the WDM **426** and the optical switch **422**. The OTDR **424** processes the return optical signal and produces a display or table indicating the presence of anomalies in the fiber, such as reflections, losses, and the like. Additional commands can be sent to the optical switch **422** for aligning any of the other output fiber or ports to the input fiber or port for examining the other "dark fibers" in the other optical links. Further, additional pieces of measurement test equipment may be coupled to additional input fibers or ports of the optical switch **422**.

The output fiber or ports of the optical switch can also be connected to the optical transmission fibers of the optical links via WDMs connected to these fibers. In examining active transmission fibers with an OTDR, the Wavelength of the optical output of the OTDR **424** is different from the wavelength of the active optical transmissions over the transmission fibers. For example, if the transmission link is operating at 1310 nm wavelength, then the OTDR **424** operates at 1550 nm wavelength for examining the transmission fibers of the link. These tests can be performed while active transmissions are occurring in the fiber.

Another application for the remote fiber test system is performing SDH/SONET performance test using an SDH/SONET test set. Such a test set has a transmitting instrument at one end and a receiver instrument at the other end. As an example, the input fiber or port of the optical switch **422** is coupled to the SDH/SONET transmission instrument, as was the OTDR, at the central office **400**. Central office **416** has the SDH/SONET receiver instrument **432** coupled to the input fiber or port of optical switch **434**. The output port of the optical switch is connected to the optical link **404** via a WDM **436**. Commands are sent to the optical switches **422** and **434** to align their input and output ports to couple the SDH/SONET transmission and receiver instruments together via one of the optical transmission fibers in the optical link **404**. Each optical transmission fiber of the optical link can be coupled to one of the respective output fibers or ports of the optical switches vie WDMs to allow SDH/SONET testing of all of the transmission fibers in the link.

The mechanical optical switch **20** of the present invention has been described using electrical stepper motors **46** for

rotating input and output ferrules **144** and **146** to align the optical fibers **152** in the input and output optical fiber arrays **148** and **150** representing the input and output optical ports of the switch. It is also possible to practice the present invention using manual means for aligning the input and output optical ports. In such a switch, the stepper motors **46** and the toothed spur gears **48** are replaced with reduction gear assemblies. The reduction gear assemblies engage the ferrules drive shaft spur gears **72** on the ferrule drive shafts **62**. A knob is provided for manually rotating the gear assembly and hence the ferrules **144** and **146** in the switch **20**. Detents can be provided with the gear assembly to indicate alignment locations of the input and output ports. Alternately, alignment may be achieved by monitoring the appropriate output port for a maximum optical signal.

A mechanical optical switch has been described that meets cycle-to-cycle repeatability, long-term repeatability, and absolute misalignment specifications. The switch is inexpensive and easy to manufacture. The switch has offset ferrules that rotate about independent axes with the ferrules being held independently in separate three-point kinematically correct mounts, such as V-blocks. The V-blocks are lined with a wear-resistant material, such as glass or ceramic and lubricated with an index matching fluid. Offsetting the ferrules and mounting then in kinematically correct mounts allows the fibers held within the ferrules to trace out closed curves with the closed curves of the fibers in the input ferrule intersecting the closed curves of the fibers in the output ferrules. The input ferrule and the output ferrule are fully filled with fibers with all the fibers being accessible as ports with the exception of the fibers centered on the axes of the ferrules. Additionally, the ceramic sleeves are used to reduce the insertion loss between the input and output fibers over time by reducing the wear at the optical interface. Further, the optical switch is useable in a remote fiber test system for performing test on optical fiber links using optical measurement test equipment. These and other aspects of the present invention are set forth in the appended claims.

What is claimed is:

1. A remote fiber test system having at least a first measurement test instrument for testing an optical fiber link having optical transmission fibers and an optical test fiber comprising:

at least a first optical switch for remotely connecting the measurement test instrument to one end of the optical fiber link, the optical switch including:

at least a first optical transmission path rotating about a first independent and offset rotational axis for positioning the first optical transmission path on a first closed curve with the first optical transmission path being coupled to the measurement test instrument;

at least a second optical transmission path rotating about a second independent and offset rotational axis for positioning the second optical transmission path on a second closed curve with the second optical transmission path being coupled to the optical fiber link, the first and second optical transmission paths being in opposing relationship forming an optical interface, with the closed curves of the optical transmission paths being laterally offset from each other for establishing intersecting points on the closed curves;

first and second mounting members for holding the respective first and second optical transmission paths with the first mounting member having a rotational axis axially aligned with the first independent and offset rotational axes and the second mounting member having a rotational axis axially aligned with the second independent and offset rotational axis, the first and second optical transmission paths being positioned off of the respective rotational axes of the mounting members;

means for storing angular coordinates representative of the intersecting points of the first and second closed curves of the respective first and second optical transmission paths; and

means for axially aligning the first and second optical transmission paths at one of the intersecting points on the closed curves for coupling the measurement test instrument to the optical fiber link using drive motors coupled to the respective mounting members and responsive to the angular coordinates for selectively rotating the first and second optical transmissions paths relative to each other about their respective independent and offset rotational axes.

2. The remote fiber test system as recited in claim **1** further comprising an optical coupler for coupling the second optical transmission path to the optical test fiber.

3. The remote fiber test system as recited in claim **2** wherein the optical coupler is a wavelength division multiplexer.

4. The remote fiber test system as recited in claim **1** wherein the measurement test instrument is an optical time domain reflectometer.

5. The remote fiber test system as recited in claim **1** wherein the measurement test instrument is an optical power meter.

6. The remote fiber test system as recited in claim **1** further comprising a second optical switch for remotely connecting another measurement test instrument to the other end of the optical fiber link.

7. The remote fiber test system as recited in claim **1** wherein the measurement test instruments are a SONET test set.

8. The remote fiber test system as recited in claim **1** wherein the optical switch further comprises a plurality of optical transmission paths rotating about the second independent and offset rotational axis for positioning the plurality of optical transmission paths on closed curves for establishing intersecting points between the closed curves of the plurality of optical transmission paths and the closed curve of the first optical transmission path with each optical transmission path of the plurality of optical transmission paths being coupled to a different optical fiber link.

9. The remote fiber test system as recited in claim **1** wherein the optical switch further comprises a plurality of optical transmission paths rotating about the first independent and offset rotational axis for positioning the plurality of optical transmission paths on closed curves for establishing intersecting points between the closed curves of the plurality of optical transmission paths and the second optical transmission path with each optical transmission path of the plurality of optical transmission paths being coupled to a separate measurement test instrument.

10. The remote fiber test system as recited in claim **1** wherein the optical switch further comprises a first and a second plurality of optical transmission paths with the first plurality of optical transmission paths rotating about the first independent and offset rotational axis for positioning the first plurality of optical transmission paths on closed curves and the second plurality of optical transmission paths rotating about the second independent and offset rotational axis for positioning the second plurality of optical transmission

paths on closed curves for establishing at least one intersecting point between each of the closed curves of the plurality of optical transmission paths rotating about the second independent and offset rotational axis and one of the closed curves of the plurality of optical transmission paths rotating about the first independent and offset rotational axis with each optical transmission path of the second plurality of optical transmission paths being coupled to a different optical fiber link and each optical transmission path of the first plurality of optical transmission paths being coupled to a separate measurement test instrument.

11. The remote fiber test system as recited in claim **1** wherein the optical switch further comprises holder assemblies with each holder assembly having a kinematic mount for receiving one of the mounting members.

12. The remote fiber test system as recited in claim **11** wherein each kinematic mount of the optical switch comprises a V-groove structure having an apex and angularly extending sidewalls forming a V-shaped cavity for receiving one of the mounting members and a spring clamp positioned over the V-shaped cavity for securing the mounting member in the cavity.

13. The remote fiber test system as recited in claim **12** wherein the spring clamp of the optical switch further comprise first and second spring claim members.

14. The remote fiber test system as recited in claim **13** wherein the optical switch further comprises wear resistant inserts secured to the spring clamp members.

15. The remote fiber test system as recited in claim **14** wherein the V-groove structures, the ware resistant spring inserts, and the mounting members of the optical switch comprise materials having substantially the same hardness.

16. The remote fiber test system as recited in claim **14** wherein the V-groove structures and the wear resistant spring inserts of the optical switch comprise materials having a hardness greater than the hardness of the mounting members.

17. The remote fiber test system as recited in claim **16** wherein the wear resistant spring inserts and the V-groove structures of the optical switch comprise a ceramic material.

18. The remote fiber test system as recited in claim **17** wherein the ceramic material of the optical switch comprises zirconium oxide.

19. The remote fiber test system as recited in claim **16** wherein the mounting members of the optical switch comprise a borosilicate material.

20. The remote fiber test system as recited in claim **14** wherein the V-groove structures of the optical switch further comprise wear resistant inserts secured on the sidewalls of the V-groove structures.

21. The remote fiber test system as recited in claim **20** wherein the wear resistant V-groove inserts, the ware resistant spring inserts, and the mounting members of the optical switch comprise materials having substantially the same hardness.

22. The remote fiber test system as recited in claim **20** wherein the wear resistant V-groove inserts and the ware resistant spring inserts of the optical switch comprise materials having a hardness greater than the harness of the mounting members.

23. The remote fiber test system as recited in claim **22** wherein the wear resistant V-groove inserts and the ware resistant spring clamp inserts of the optical switch comprise a ceramic material.

24. The remote fiber test system as recited in claim **23** wherein the ceramic material of the optical switch comprises zirconium oxide.

25. The remote fiber test system as recited in claim **22** wherein the wear resistant V-groove inserts and the wear resistant spring damp inserts of the optical switch comprise sapphire.

26. The remote fiber test system as recited in claim **22** wherein the mounting members of the optical switch comprise a borosilicate material.

27. The remote fiber test system as recited in claim **20** wherein the V-groove inserts of the optical switch further comprise wear resistant strips bonded to the opposing ends of the sidewalls for forming a double ended bearing for the mounting members.

28. The remote fiber test system as recited in claim **1** wherein the mounting members of the optical switch comprise first and second ferrules with each ferrule having a centrally disposed longitudinal axis about which the ferrules rotate, an outside diameter and a central bore for receiving one of the first or second optical transmission paths, the optical transmission paths being positioned off of the axes of rotation of the ferrules.

29. The remote fiber test system as recited in claim **28** wherein the optical switch further comprises first and second sleeve members secured to the respective first and second ferrules at the optical interface with the sleeve members having a hardness greater than the ferrules and the optical transmission paths for forming respective recessed polished end faces on the ferrules at the optical interface.

30. The remote fiber test system as recited in claim **29** wherein the first and second sleeve members of the optical switch comprise a ceramic material.

31. The remote fiber test system as recited in claim **30** wherein the ceramic material of the optical switch comprises zirconium oxide.

32. The remote fiber test system as recited in claim **1** wherein the mounting members of the optical switch comprise ferrules having a hardness greater than the optical transmission paths for forming recessed polished end faces on the ferrule at the optical interface between the first and second optical transmission paths.

33. The remote fiber test system as recited in claim **32** wherein ferrules of the optical switch comprise a ceramic material.

34. The remote fiber test system as recited in claim **33** wherein the ceramic material of the optical switch comprises zirconium oxide.

35. The remote fiber test system as recited in claim **28** wherein the first and second optical transmission paths of the optical switch comprise optical fibers.

36. The remote fiber test system as recited in claim **35** wherein the optical switch further comprises a plurality of optical fibers rotating about the second independent and offset rotational axis for positioning the plurality of optical fibers on closed curves for establishing intersecting points between the closed curves of the plurality of optical fibers rotating about the second independent and offset rotational axis and the closed curve of the first optical fiber with each optical fiber of the plurality of optical fibers being coupled to an optical test fiber of a different optical fiber link.

37. The remote fiber test system as recited in claim **36** wherein the plurality of optical fibers rotating about the second independent and offset rotational axis of the optical switch completely fill the ferrule.

38. The remote fiber test system as recited in claim **35** wherein the optical switch further comprises a plurality of optical fibers rotating about the first independent and offset rotational axis for positioning the plurality of optical fibers on closed curves for establishing intersecting points between

the closed curves of the plurality of optical fibers rotating about the first independent and offset rotational axis and the closed curve of the second optical fiber rotating about the second independent and offset rotational axis with each optical fiber of the plurality of optical fibers being coupled to a separate measurement test instrument.

39. The remote fiber test system as recited in claim **38** wherein the plurality of optical fibers rotating about the first independent and offset rotational axis of the optical switch completely fill the ferrule.

40. The remote fiber test system as recited in claim **35** wherein the optical switch further comprises a first and a second plurality of optical fibers with the first plurality of optical fibers rotating about the first independent and offset rotational axis for positioning the plurality of optical fibers on closed curves and the second plurality of optical fibers rotating about the second independent and offset rotational axis for positioning the plurality of optical fibers on closed curves for establishing at least one intersecting point between each of the closed curves of the plurality of optical fibers rotating about the second independent and offset rotational axis and one of the closed curves of the plurality of optical fibers rotating about the first independent and offset rotational axis with each optical fiber of the second plurality of optical fibers being coupled to an optical test fiber of a different optical fiber link and each optical fiber of the first plurality of optical fibers being coupled to a separate measurement test instrument.

41. The remote fiber test system as recited in claim **40** wherein the first and second plurality of optical fibers of the optical switch respectively fill the first and second ferrules.

42. The remote fiber test system as recited in claim **1** wherein the drive motors of the optical switch comprise first and second stepper motors responsive to the angular coordinates of one of the intersecting points of the first and second closed curves for coupling rotational movement to the respective first and second optical transmission paths.

43. The remote fiber test system as recited in claim **1** wherein the drive motor of the optical switch comprise first and second DC motors with high resolution encoders responsive to the angular coordinates of one of the intersecting points of the first and second closed curves for coupling rotational movement to the respective first and second optical transmission paths.

44. The remote fiber test system as recited in claim **1** wherein the optical switch further comprises first and second rotatable shafts coupled to the respective mounting members with each rotatable shaft having a first spur gear mounted thereon for engaging a second spur gear mounted on each of the respective drive motors.

45. The remote fiber test system as recited in claim **44** wherein the optical switch further comprises first and second bearings having central bores therein for receiving the rotatable shafts.

46. The remote fiber test system as recited in claim **45** wherein the rotatable shafts of the optical switch further comprise a first shaft having a central bore for receiving the respective first and second optical transmission paths and a flexible drive shaft coupling for connecting the first shaft to the respective mounting members.

* * * * *