Keywords: DC to DC, buck, boost, flyback, inverter, PWM, quick-PWM, voltage mode, current mode skip, synchronous rectifier, switching regulator, linear regulator

TUTORIAL 2031

DC-DC Converter Tutorial

Nov 29, 2001

Abstract: Switching power supplies offer higher efficiency than traditional linear power supplies. They can step-up, step-down, and invert. Some designs can isolate output voltage from the input. This article outlines the different types of switching regulators used in DC-DC conversion. It also reviews and compares the various control techniques for these converters.

Introduction

The power switch was the key to practical switching regulators. Prior to the invention of the Vertical Metal Oxide Semiconductor (VMOS) power switch, switching supplies were generally not practical.

The inductor's main function is to limit the current slew rate through the power switch. This action limits the otherwise high-peak current that would be limited by the switch resistance alone. The key advantage for using an inductor in switching regulators is that an inductor stores energy. This energy can be expressed in Joules as a function of the current by:

$$E = \frac{1}{2} \times L \times I^2$$

A linear regulator uses a resistive voltage drop to regulate the voltage, losing power (voltage drop times the current) in the form of heat. A switching regulator's inductor does have a voltage drop and an associated current but the current is 90 degrees out of phase with the voltage. Because of this, the energy is stored and can be recovered in the discharge phase of the switching cycle. This results in a much higher efficiency and much less heat.

What is a Switching Regulator?

A switching regulator is a circuit that uses a power switch, an inductor, and a diode to transfer energy from input to output.

The basic components of the switching circuit can be rearranged to form a step-down (buck)converter, a step-up (boost) converter, or an inverter (flyback). These designs are shown in **Figures 1**, **2**, **3**, and **4** respectively, where Figures 3 and 4 are the same except for the transformer and the diode polarity. Feedback and control circuitry can be carefully nested around these circuits to regulate the energy transfer and maintain a constant output within normal operating conditions.

SK hynix Ex. 1014, Page 1 of 14

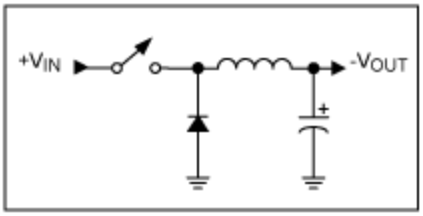

Figure 1. Buck converter topology.

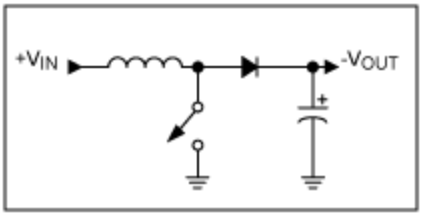

Figure 2. Simple boost converter.

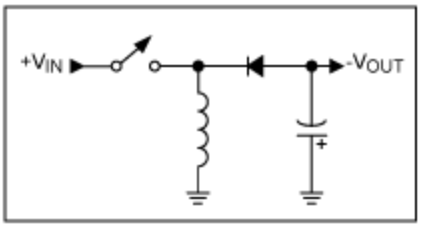

Figure 3. Inverting topology.

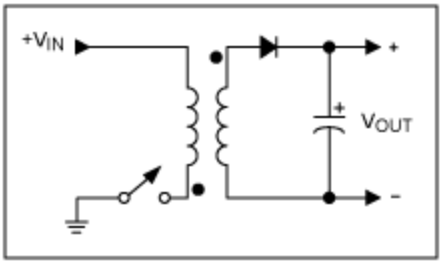

Figure 4. Transformer flyback topology.

Why Use a Switching Regulator?

Switching regulators offer three main advantages compared to linear regulators. First, switching efficiency can be much better. Second, because less energy is lost in the transfer, smaller components and less thermal management are required. Third, the energy stored by an inductor in a switching regulator can be transformed to output voltages that can be greater than the input (boost), negative (inverter), or can even be transferred through a transformer to provide electrical isolation with respect to the input (Figure 4).

Given the advantages of switching regulators, one might wonder where can linear regulators be used? Linear regulators provide lower noise and higher bandwidth; their simplicity can sometimes offer a less expensive solution.

There are, admittedly, disadvantages with switching regulators. They can be noisy and require energy

management in the form of a control loop. Fortunately, the solution to these control problems is integrated in modern switching-mode controller chips.

Charge Phase

A basic boost configuration is depicted in **Figure 5**. Assuming that the switch has been open for a long time and that the voltage drop across the diode is negative, the voltage across the capacitor is equal to the input voltage. When the switch closes, the input voltage, $+V_{IN}$, is impressed across the inductor and the diode prevents the capacitor from discharging $+V_{OUT}$ to ground. Because the input voltage is DC, current through the inductor rises linearly with time at a rate proportional to the input voltage divided by the inductance.

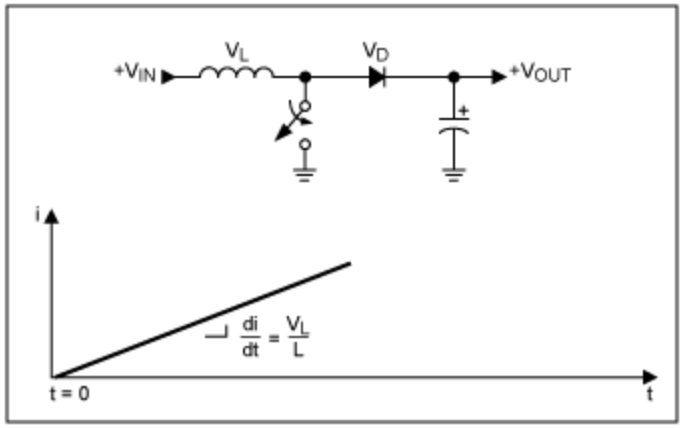

Figure 5. Charging phase: when the switch closes, current ramps up through the inductor.

Discharge Phase

Figure 6 shows the discharge phase. When the switch opens again, the inductor current continues to flow into the rectification diode to charge the output. As the output voltage rises, the slope of the current, di/dt, though the inductor reverses. The output voltage rises until equilibrium is reached or:

$$V_L = L \times di/dt$$

In other words, the higher the inductor voltage, the faster the inductor current drops.

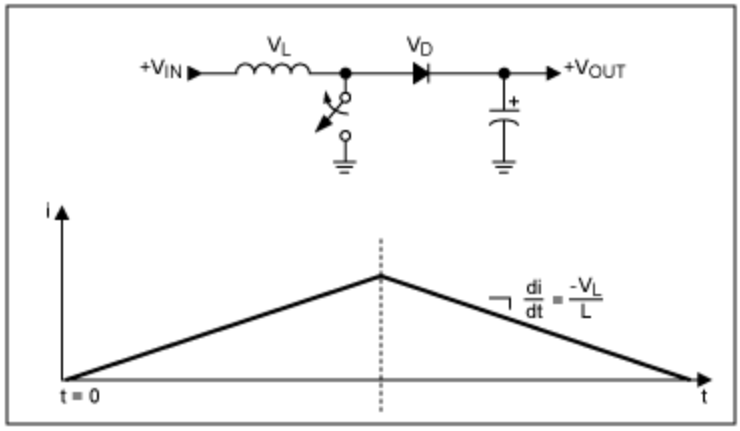

Figure 6. Discharge phase: when the switch opens, current flows to the load through the rectifying diode.

In a steady-state operating condition, the average voltage across the inductor over the entire switching cycle is zero. This implies that the average current through the inductor is also in steady state. This is an important rule governing all inductor-based switching topologies. Taking this one step further, we can establish that for a given charge time, t_{ON}, and a given input voltage and with the circuit in equilibrium, there is a specific discharge time, t_{OFF}, for an output voltage. Because the average inductor voltage in steady state must equal zero, we can calculate for the boost circuit:

$$V_{IN} \times t_{ON} = t_{OFF} \times V_L$$

And because:

$$V_{OUT} = V_{IN} + V_L$$

We can then establish the relationship:

$$V_{OUT} = V_{IN} \times (1 + t_{ON}/t_{OFF})$$

Using the relationship for duty cycle (D):

$$t_{ON}/(t_{ON} + t_{OFF}) = D$$

Then for the boost circuit:

$$V_{OUT} = V_{IN}/(1-D)$$

Similar derivations can be made for the buck circuit:

$$V_{OUT} = V_{IN} \times D$$

And for the inverter circuit (flyback):

$$V_{OUT} = V_{IN} \times D/(1-D)$$

Control Techniques

From the derivations for the boost, buck, and inverter (flyback), it can be seen that changing the duty cycle controls the steady-state output with respect to the input voltage. This is a key concept governing all inductor-based switching circuits.

The most common control method, shown in **Figure 7**, is pulse-width modulation (PWM). This method takes a sample of the output voltage and subtracts this from a reference voltage to establish a small error signal (V_{ERROR}). This error signal is compared to an oscillator ramp signal. The comparator outputs a digital output (PWM) that operates the power switch. When the circuit output voltage changes, V_{ERROR} also changes and thus causes the comparator threshold to change. Consequently, the output pulse width (PWM) also changes. This duty cycle change then moves the output voltage to reduce the error signal to zero, thus completing the control loop.

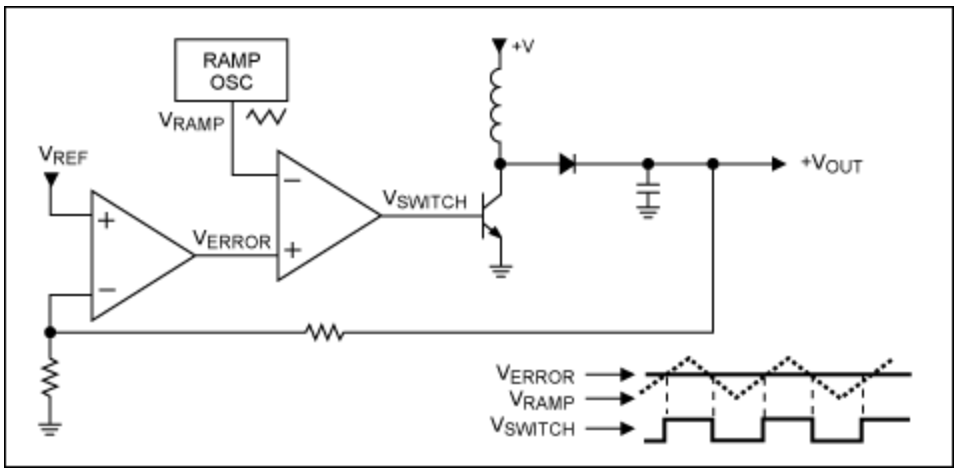

Figure 7. Varying error signal generates a pulse-width-modulated switch signal.

Figure 8 shows a practical circuit using the boost topology formed with the MAX1932. This IC is an integrated controller with an onboard programmable digital-to-analog converter (DAC). The DAC sets the output voltage digitally through a serial link. R5 and R8 form a divider that meters the output voltage. R6 is effectively out of circuit when the DAC voltage is the same as the reference voltage (1.25V). This is because there are zero volts across R6 and so zero current. When the DAC output is zero (ground), R6 is effectively in parallel with R8. These two conditions correspond to the minimum and maximum output adjustment range of 40V and 90V, respectively.

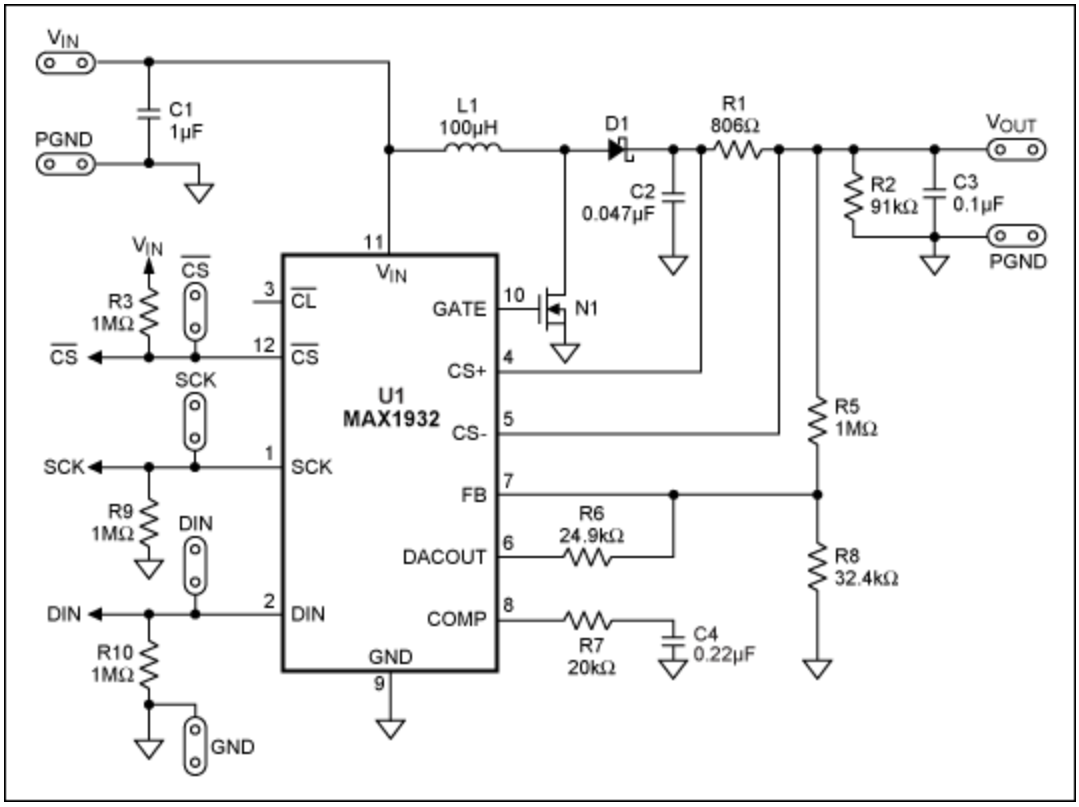

Figure 8. The MAX1932 provides an integrated boost circuit with voltage-mode control.

Next, the divider signal is subtracted from the internal 1.25V reference and then amplified. This error signal is then output on pin 8 as a current source. This, in conjunction with the differential input pair, forms a transconductance amplifier. This arrangement is used because the output at the error amp is high impedance (current source), allowing the circuit's gain to be adjusted by changing R7 and C4. This arrangement also provides the ability to trim the loop gain for acceptable stability margins. The error signal on pin 8 is then forwarded to the comparator and output to drive the power switch. R1 is a current-sense resistor that meters the output current. When the current is unacceptably high, the PWM circuit shuts down, thereby protecting the circuit.

The type of switching (topology) in Figures 7 and 8 is classified as a voltage-mode controller (VMC) because the feedback regulates the output voltage. For analysis we can assume that if the loop gain is infinite, the output impedance for an ideal voltage source is zero. Another commonly used type of control is current-mode control (CMC). This method regulates the output current and, with infinite loop gain, the output is a high-impedance source. In CMC, the current loop is nested with a slower voltage loop, as shown in **Figure 9**; a ramp is generated by the slope of the inductor current and compared with the error signal. So, when the output voltage sags, the CMC supplies more current to the load. The advantage of CMC is its ability to manage the inductor current. In VMC the inductor current is not metered. This becomes a problem because the inductor, in conjunction with the output filter capacitor, forms a resonant tank that can ring and even cause oscillations. Current mode control senses the inductor current to correct for inconsistencies. Although difficult to accomplish, carefully selected compensation components can effectively cancel out this resonance in VCM.

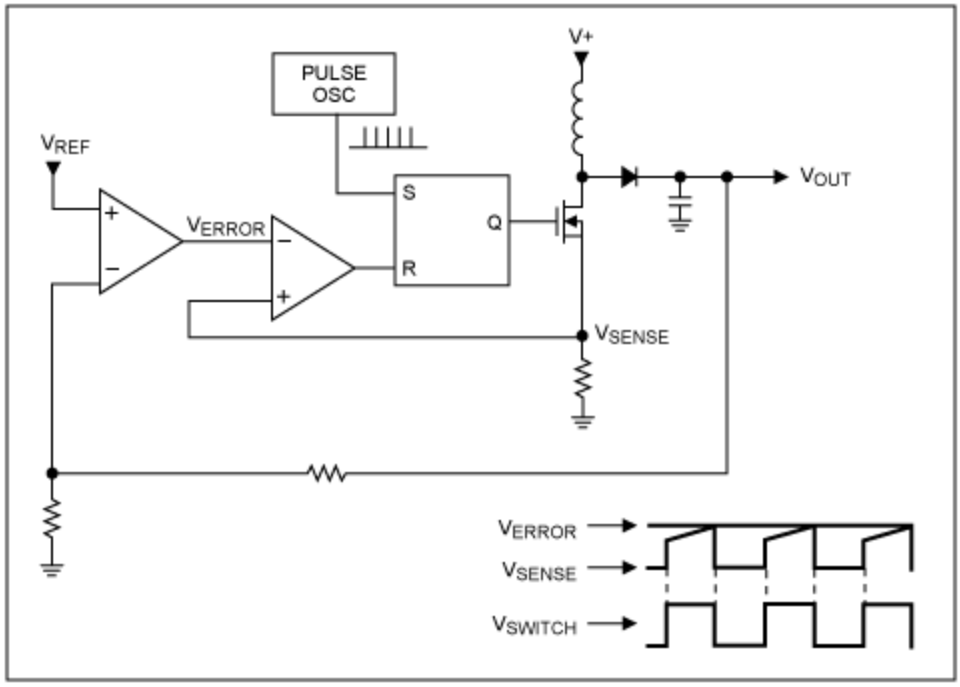

Figure 9. Current-mode pulse-width modulation.

The circuit in **Figure 10** uses CMC with the MAX668 controller. This boost circuit is similar to Figures 7 and 8 except that R1 senses the inductor current for CMC. R1 and some internal comparators provide a current limit. R5 in conjunction with C9 filters the switching noise on the sense resistor to prevent false triggering of the current limit. The MAX668's internal current-limit threshold is fixed; changing resistor R1 adjusts the current-limit setting. Resistor R2 sets the operating frequency. The MAX668 is a versatile integrated circuit that can provide a wide range of DC-DC conversions.

The external components of the MAX668 can have high-voltage ratings that provide greater flexibility for high-power applications. For portable applications that require less power, the MAX1760 and the MAX8627 are recommended. These latter devices use internal FETs, and sense the current by using the FETs' resistance to measure inductor current (no sense resistor required).

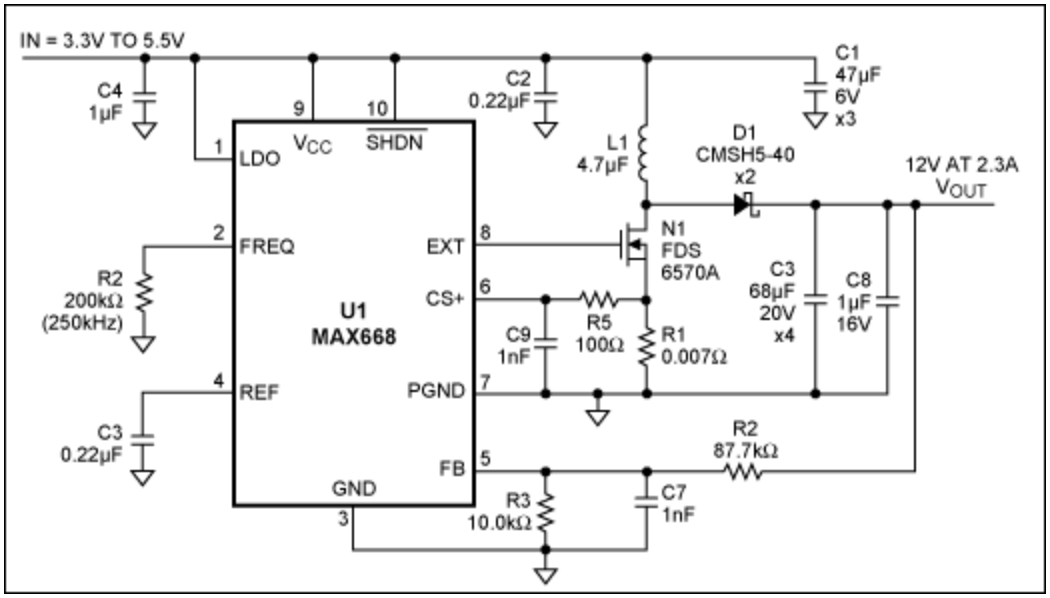

Figure 10. The MAX668 for current-mode-controlled boost circuit.

Figure 11 shows a simplified version of Maxim's Quick-PWM™ architecture. To analyze this buck circuit, we start with the feedback signal below the regulating threshold defined by the reference. If there are no forward current faults, then the t_{ON} one-shot timer that calculates the on-time for DH is turned on immediately along with DH. This t_{ON} calculation is based on the output voltage divided by the input, which approximates the on-time required to maintain a fixed switching frequency defined by the constant K. Once the t_{ON} one-shot timer has expired, DH is turned off and DL is turned on. Then if the voltage is still below the regulating threshold, the DH immediately turns back on. This allows the inductor current to rapidly ramp up to meet the load requirements. Once equilibrium with the load has been met, the average inductor voltage must be zero. Therefore we calculate:

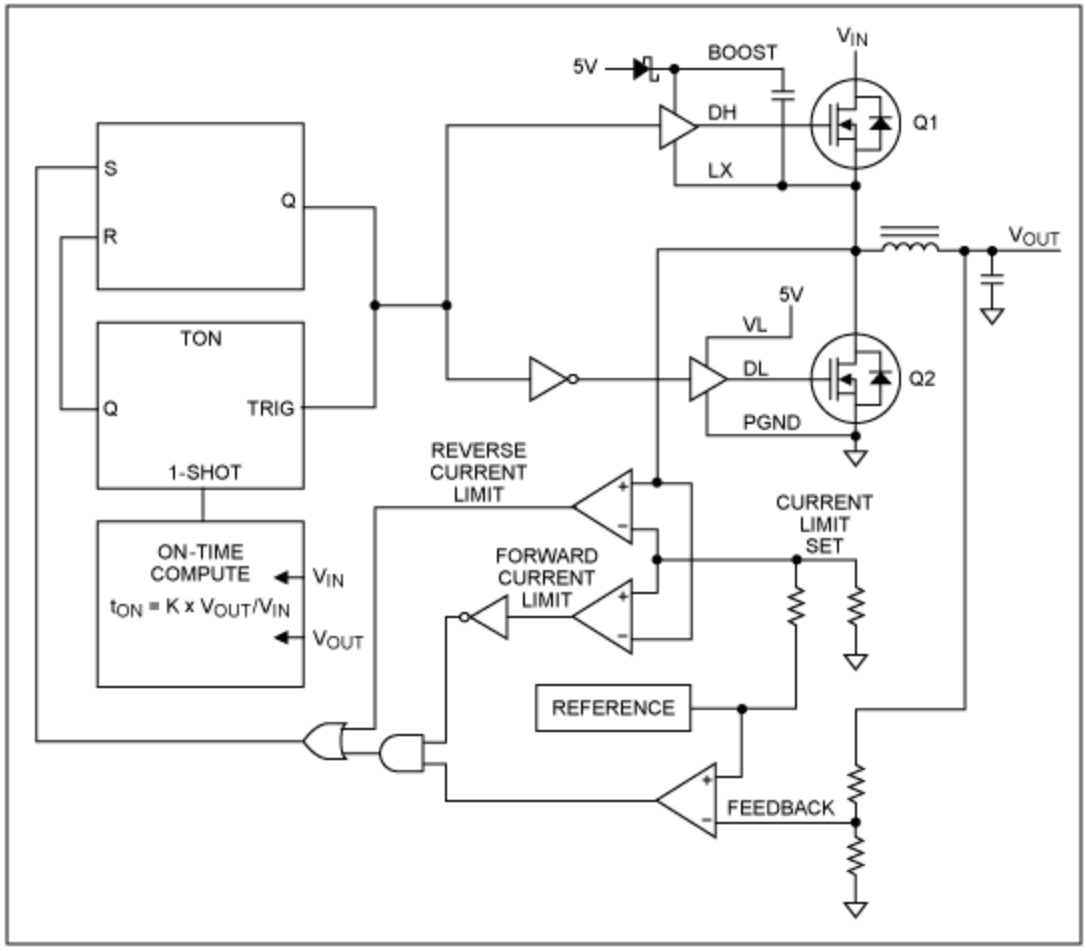

Figure 11. Simplified block diagram of Maxim's Quick-PWM control.

$$t_{ON} \times (V_{IN} - V_{OUT}) = t_{OFF} \times V_{OUT}$$

Rearranging:

$$V_{OUT}/(V_{IN} - V_{OUT}) = t_{ON}/t_{OFF}$$

Adding 1 to both side and collecting terms:

$$V_{OUT}/V_{IN} = t_{ON}/(t_{ON} + t_{OFF})$$

Because the duty factor is D:

$$t_{ON}/(t_{ON} + t_{OFF}) = D$$

For the buck circuit:

$$D = V_{OUT}/V_{IN}$$

Maxim's proprietary Quick-PWM control method offers some advantages over PWM. Quick-PWM control generates a new cycle when the output voltage falls below the regulation threshold. Consequently, heavy

transients force the output to fall, immediately firing a new on-cycle. This action results in a 100ns load-step response. It is also important to note that unlike the buck circuit in Figure 1, Figure 11 uses a MOSFET (Q2) instead of a diode for the discharge path. This design reduces the losses associated with the diode drop; the on-resistance of the MOSFET channel doubles as a current sense. Because output-voltage ripple is required to stimulate the circuit to switch, an output filter capacitor with some ESR is required to maintain stability. The Quick-PWM architecture can also respond quickly to line input changes by directly feeding the input voltage signal to the on-time calculator. Other methods must wait for the output voltage to sag or soar before action is taken, and this is often too late.

A practical application of Quick-PWM is found in **Figure 12**. The MAX8632 is an integrated DDR memory power supply. Along with a Quick-PWM buck circuit (VDDQ), the MAX8632 integrates a high-speed linear regulator (VTT) to manage bus transients found in DDR memory systems. The linear regulator offers specific advantages over switchers: linear regulators do not have an inductor to limit current slew-rate, so a very fast current slew rate can service load transients. Slower circuits would require large capacitors to provide load current until the power supply can ramp up the current to service the load.

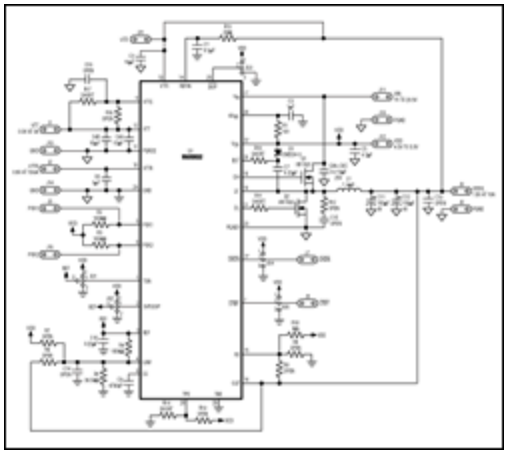

More detailed image (PDF, 76kB)

Figure 12. The MAX8632 uses Maxim's Quick-PWM architecture and a linear regulator to provide a complete DDR power-supply system. The device can be used as a main GPU or as a standard core-logic power supply.

Efficiency

One of the largest power-loss factors for switchers is the rectifying diode. The power dissipated is simply the forward voltage drop multiplied by the current going through it. The reverse recovery for silicon diodes can also create loss. These power losses reduce overall efficiency and require thermal management in the form of a heat sink or fan.

To minimize this loss, switching regulators can use Schottky diodes that have a relatively low forward-voltage drop and good reverse recovery. For maximum efficiency, however, you can use a MOSFET switch instead of the diode. This design is known as a "synchronous rectifier" (see **Figures** 11, 12 and **13**). The synchronous rectifier switch is open when the main switch is closed, and the same is true conversely. To prevent cross-conduction (both top and bottom switches are on simultaneously), the switching scheme must be break-before-make. Because of this, a diode is still required to conduct during the interval between the opening of the main switch and the closing of the synchronous-rectifier switch

(dead time). When a MOSFET is used as a synchronous switch, the current normally flows in reverse (source to drain), and this allows the integrated body diode to conduct current during the dead time. When the synchronous rectifier switch closes, the current flows through the MOSFET channel. Because of the very low-channel resistance for power MOSFETs, the standard forward drop of the rectifying diode can be reduced to a few millivolts. Synchronous rectification can provide efficiencies well above 90%.

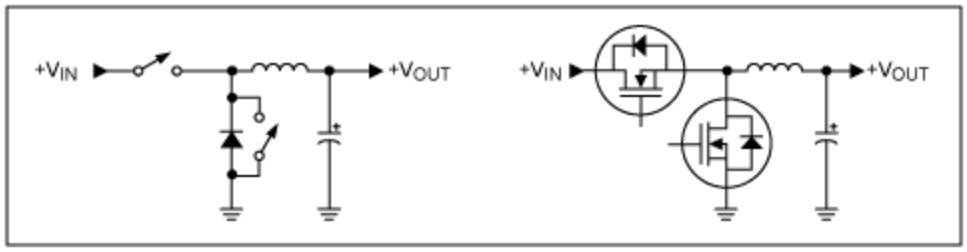

Figure 13. Synchronous rectification for the buck circuit. Notice the integrated MOSFET body diode.

Skip Mode Improves Light Load Efficiency

A feature offered in many modern switching controllers is skip mode. Skip mode allows the regulator to skip cycles when they are not needed, which greatly improves efficiency at light loads. For the standard buck circuit (Figure 1) with a rectifying diode, not initiating a new cycle simply allows the inductor current or inductor energy to discharge to zero. At this point, the diode blocks any reverse-inductor current flow and the voltage across the inductor goes to zero. This is called "discontinuous mode" and is shown in **Figure 14**. In skip mode, a new cycle is initiated when the output voltage drops below the regulating threshold. While in skip mode and discontinuous operation, the switching frequency is proportional to the load current. The situation with a synchronous rectifier is, unfortunately, somewhat more complicated. This is because the inductor current can reverse in the MOSFET switch if the gate is left on. The MAX8632 integrates a comparator that senses when the current through the inductor has reversed and opens the switch, allowing the MOSFET's body diode to block the reverse current.

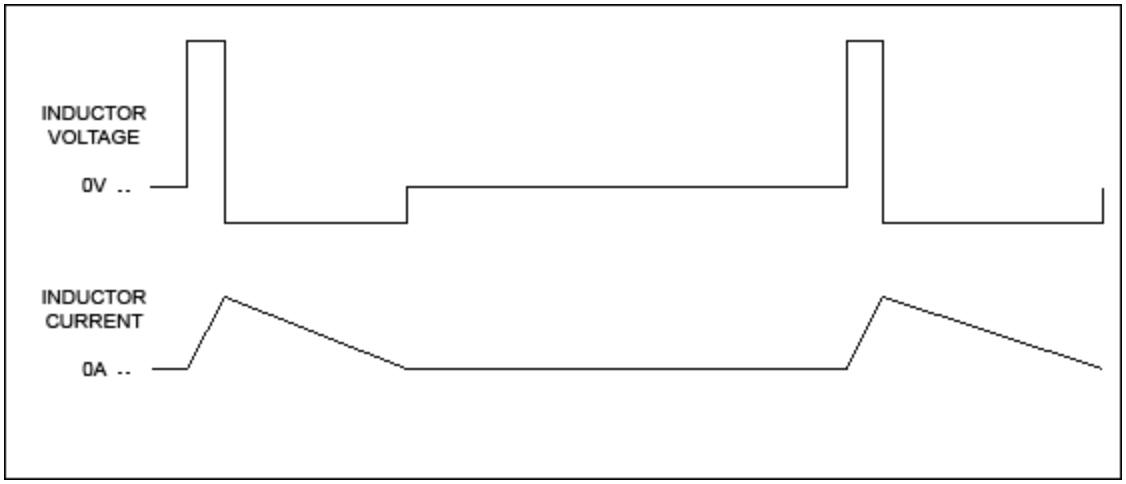

Figure 14. In discontinuous mode the inductor fully discharges and then the inductor voltage rests at zero.

Figure 15 shows that skip mode offers improved light-load efficiencies but at the expense of noise,

because the switching frequency is not fixed. The forced-PWM control technique maintains a constant switching frequency, and varies the ratio of charge cycle to discharge cycle as the operating parameters vary. Because the switching frequency is fixed, the noise spectrum is relatively narrow, thereby allowing simple lowpass or notch filter techniques to greatly reduce the peak-to-peak ripple voltage. Because the noise can be placed in a less-sensitive frequency band, PWM is popular with telecom and other applications where noise interference is a concern.

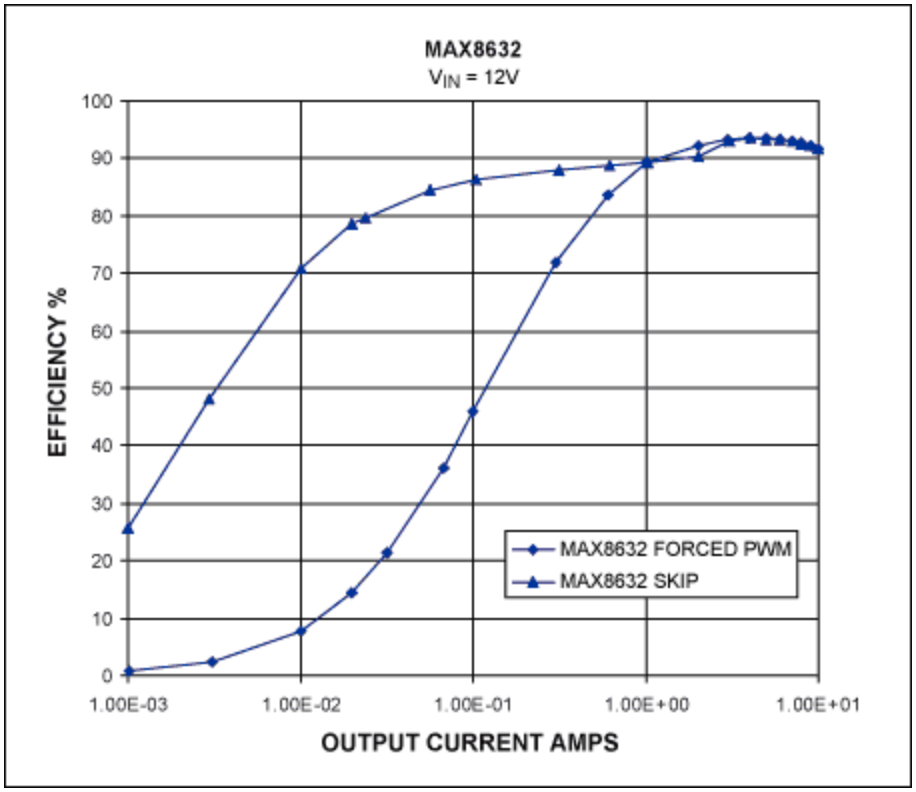

Figure 15. Efficiency with and without skip mode.

Summary

Although switching techniques are more difficult to implement, switching circuits have almost completely replaced linear power supplies in a wide range of portable and stationary designs. This is because switching circuits offer better efficiency, smaller components, and fewer thermal management issues.

MOSFET power switches are now integrated with controllers to form single-chip solutions, like the MAX1945 circuit shown in **Figure 16**. This chip has a metallic slug on the underside that removes heat from the die so the 28-pin TSSOP package can dissipate over 1W, allowing the circuit to supply over 10W to its load. With a 1MHz switching frequency, the output inductor and filter capacitors can be reduced in size, further saving valuable space and component count. As MOSFET power-switch technologies continue to improve, so will switch-mode performance, further reducing cost, size, and thermal management problems.

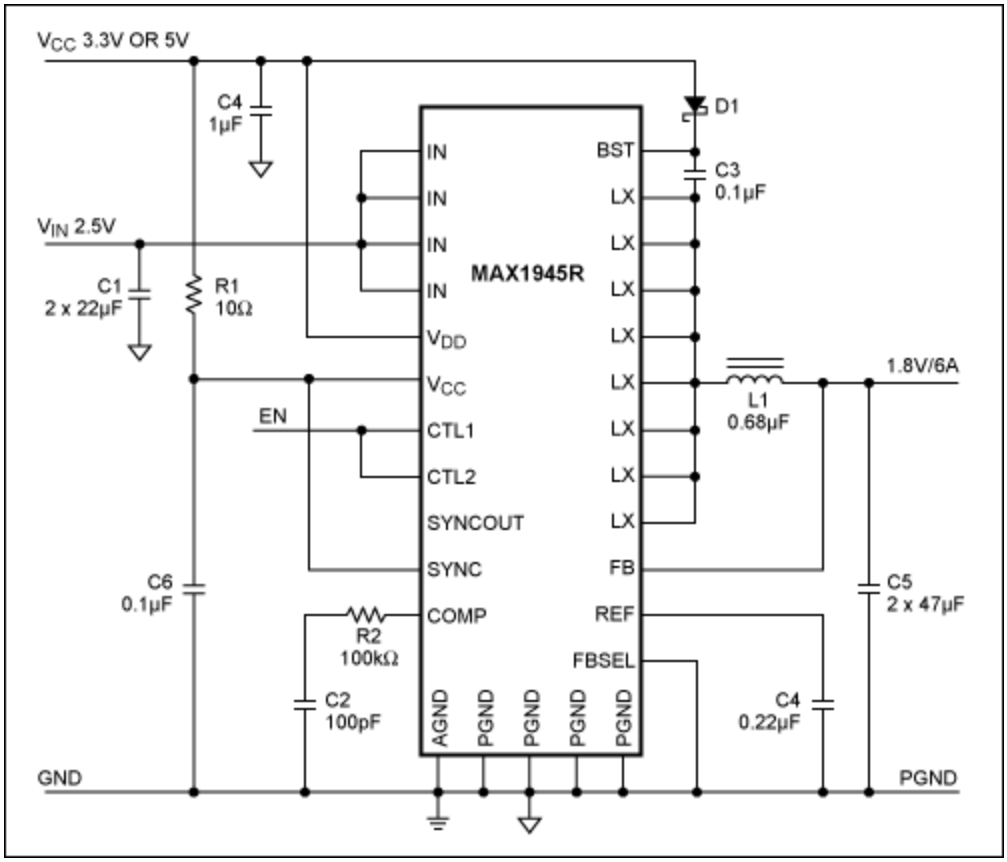

Figure 16. The MAX1945 is a 6A internal switch device with a reduced part count and small footprint to save board space.

Part Selection Links
Step-Up/Boost Converters
Step-Down/Buck Converters
Switching Regulators for Driving LEDs
Switching Regulators for Battery-Powered Applications
Switching Regulators for Industrial (High Voltage) Applications

Related Parts		
MAX1760	0.8A, Low-Noise, 1MHz, Step-Up DC-DC Converter	Free Samples
MAX1932	Digitally Controlled, 0.5% Accurate, Safest APD Bias Supply	Free Samples
MAX1945	1MHz, 1% Accurate, 6A Internal Switch Step-Down Regulators	Free Samples

MAX668	1.8V to 28V Input, PWM Step-Up Controllers in µMAX	Free Samples
MAX8627	Low V_{BATT}, 20µA I_Q, 1MHz Synchronous Boost Converter with True Shutdown	Free Samples
MAX8632	Integrated DDR Power-Supply Solution for Desktops, Notebooks, and Graphic Cards	Free Samples

More Information
For Technical Support: http://www.maximintegrated.com/support
For Samples: http://www.maximintegrated.com/samples
Other Questions and Comments: http://www.maximintegrated.com/contact

Application Note 2031: http://www.maximintegrated.com/an2031
TUTORIAL 2031, AN2031, AN 2031, APP2031, Appnote2031, Appnote 2031
© 2013 Maxim Integrated Products, Inc.
Additional Legal Notices: http://www.maximintegrated.com/legal