Separation Science and Technology, 42: 1123–1193, 2007
Copyright © Taylor & Francis Group, LLC
ISSN 0149-6395 print/1520-5754 online
DOI: 10.1080/01496390701242194

Downloaded by [University of South Carolina] at 12:58 08 June 2016

State-of-the-Art Adsorption and Membrane Separation Processes for Hydrogen Production in the Chemical and Petrochemical Industries

James A. Ritter and Armin D. Ebner
Department of Chemical Engineering, Swearingen Engineering Center,
University of South Carolina, Columbia, SC

Abstract: This review on the use of adsorption and membrane technologies in H_2 production is directed toward the chemical and petrochemical industries. The growing requirements for H_2 in chemical manufacturing, petroleum refining, and the newly emerging clean energy concepts will place greater demands on sourcing, production capacity and supplies of H_2. Currently, about 41 MM tons/yr of H_2 is produced worldwide, with 80% of it being produced from natural gas by steam reforming, partial oxidation and autothermal reforming. H_2 is used commercially to produce CO, syngas, ammonia, methanol, and higher alcohols, urea and hydrochloric acid. It is also used in Fischer Tropsch reactions, as a reducing agent (metallurgy), and to upgrade petroleum products and oils (hydrogenation).

It has been estimated that the reforming of natural gas to produce H_2 consumes about 31,800 Btu/lb of H_2 produced at 331 psig based on 35.5 MM tons/yr production. It is further estimated that 450 trillion Btu/yr could be saved with a 20% improvement in just the H_2 separation and purification train after the H_2 reformer. Clearly, with the judicious and further use of adsorption or membrane technology, which are both classified as low energy separation processes, energy savings could be readily achieved in a reasonable time frame.

To assist in this endeavor of fostering the development of new adsorption and membrane technologies suitable for H_2, CO and syngas production, the current industrial practice is summarized in terms of the key reforming and shift reactions and reactor conditions, along with the four most widely used separation techniques, i.e.,

Received 14 December 2006, Accepted 14 January 2007
Address correspondence to James A. Ritter, Department of Chemical Engineering, Swearingen Engineering Center, University of South Carolina, Columbia, SC 29208. Tel.: (803) 777-3590; Fax: (803) 777-8265. E-mail: ritter@engr.sc.edu

Topsoe, Inc. – EX1042
Page 1 of 71

absorption, adsorption, membrane, and cryogenic, to expose the typical conditions and unit processes involved in the reforming of methane. Since all of the reactions are reversible, the H_2 or CO productivity in each one of them is limited by equilibrium, which certainly provides for process improvement. Hence, the goal of this review is to foster the development of adsorption and membrane technologies that will economically augment in the near term and completely revamp in the far term a typical H_2, CO or syngas production plant that produces these gases from natural gas and hydrocarbon feedstocks.

A review of the emerging literature concepts on evolving adsorption and membrane separations applicable to H_2 production is provided, with an emphasis placed on where the state-of-the-art is and where it needs to go. Recommendations for future research and development needs in adsorbent and membrane materials are discussed, and detailed performance requirements are provided. An emphasis is also placed on flow sheet design modification with adsorption or membrane units being added to existing plants for near term impact, and on new designs with complete flow sheet modification for new adsorption or membrane reactor/separators replacing current reactor and separator units in an existing plant for a longer term sustainable impact.

Keywords: Steam methane reforming, SMR, auto-thermal reforming, ATR, partial oxidation, POX, water gas shift, WGS, pressure swing adsorption, PSA

Downloaded by [University of South Carolina] at 12:58 08 June 2016

CURRENT COMMERCIAL PRACTICES

Overview of Hydrogen Production and Uses

Worldwide, industrial hydrogen is currently produced at over 41 MM tons/yr with 80% coming from the steam reforming of natural gas (1). Globally, hydrogen produced "on-purpose," i.e., not as part of petrochemical processing, is about 16 trillion scf/year; and refinery by-product hydrogen is about 14 trillion scf/yr or about half the global total. The growing demand for hydrogen in chemical manufacturing, petroleum refining, and the newly emerging clean energy concepts will be placing greater demands on supply and will most certainly impact pricing.

Hydrogen is used commercially in petroleum and chemical processing for hydrodesulfurization, production of syngas, ammonia, methanol, higher alcohols, urea, and hydrochloric acid (2–6). It is also used in Fischer Tropsch reactions, as a reducing agent (metallurgy), and to upgrade petroleum products and oils (hydrogenation, hydrocracking) (2–6). Due to increased demand, H_2 is increasingly being produced from natural gas by steam reforming, partial oxidation and autothermal reforming.

The reforming of natural gas to produce H_2 consumes about 31,800 Btu/lb of H_2 produced at 331 psig based on 35.5 MM tons/yr production (7). It is estimated that 450 trillion Btu/yr could be saved with a 20% improvement in just the H_2 separation and purification train after the hydrogen reformer (7). Clearly, improved separation technology can offer substantial dividends (8).

This review was undertaken to provide research and development guidance for the planning and development of new separation technologies to drive the unfavorable equilibrium thermodynamics for improved H_2 production. A starting point for this assessment is to define current technology and operating conditions. Following this introductory information, specific recommendations are set forth to provide the performance improvements needed to enhance efficiencies and achieve energy savings. It is the intent of this review to focus on the use of adsorption and membrane processes to drive equilibrium limited H_2 production technologies.

Downloaded by [University of South Carolina] at 12:58 08 June 2016

H_2 Production

Reforming reactions and typical operating conditions are summarized in this section. The four most widely used separations methods, i.e., absorption, adsorption, membrane, and cryogenic, are also summarized. These chemical reactions are reversible and the hydrogen productivity is thus equilibrium limited.

Figure 1a displays a flow sheet of a typical, commercial, large-scale hydrogen or syngas production plant incorporating a pre-reformer, a steam reformer, high and or low temperature water gas shift reactors, and H_2 purification units such as absorption with methanation, pressure swing adsorption, or membrane with methanation. Figure 1b displays a flow sheet of a typical, commercial, ammonia production plant incorporating a steam reformer and possibly a secondary reformer or a partial oxidation reactor, high and or low temperature water gas shift reactors, and a H_2 purification unit such as absorption with methanation. Figure 1c displays a flow sheet of a typical, commercial, syngas production plant incorporating a pre-reformer, a steam reformer, and possibly a secondary reformer or an autothermal reformer, and an absorption based H_2 purification unit (1–6, 9).

Tables 1 to 4 provide a technology summary for commercial hydrogen production. These tables include the types of hydrogen, ammonia, methanol, and syngas plants in operation. They also provide the licensor, production capacity, and the number of units operating worldwide (3, 4).

The feedstock to a steam methane reformer (SMR) is first desulfurized to reduce the sulfur levels to below 2 ppmv to protect the SMR catalyst. This desulfurization step is accomplished with a Co-Mo or zinc oxide hydrogenation catalyst, employed at 360 to 400°C, to convert the sulfur into H_2S, which is later removed from the gas via a downstream absorption or adsorption step.

Absorption is the most widely practiced separation technique for removing H_2S from natural gas. The three absorption processes most commonly utilized are the monoethanolamine (MEA) process, the methyldiethanolamine (MDEA) process, and the Purisol-process. However, because of the relatively low operating temperature of these absorption processes, their use in desulfurization is limited to gas streams containing primarily light hydrocarbons.

Downloaded by [University of South Carolina] at 12:58 08 June 2016

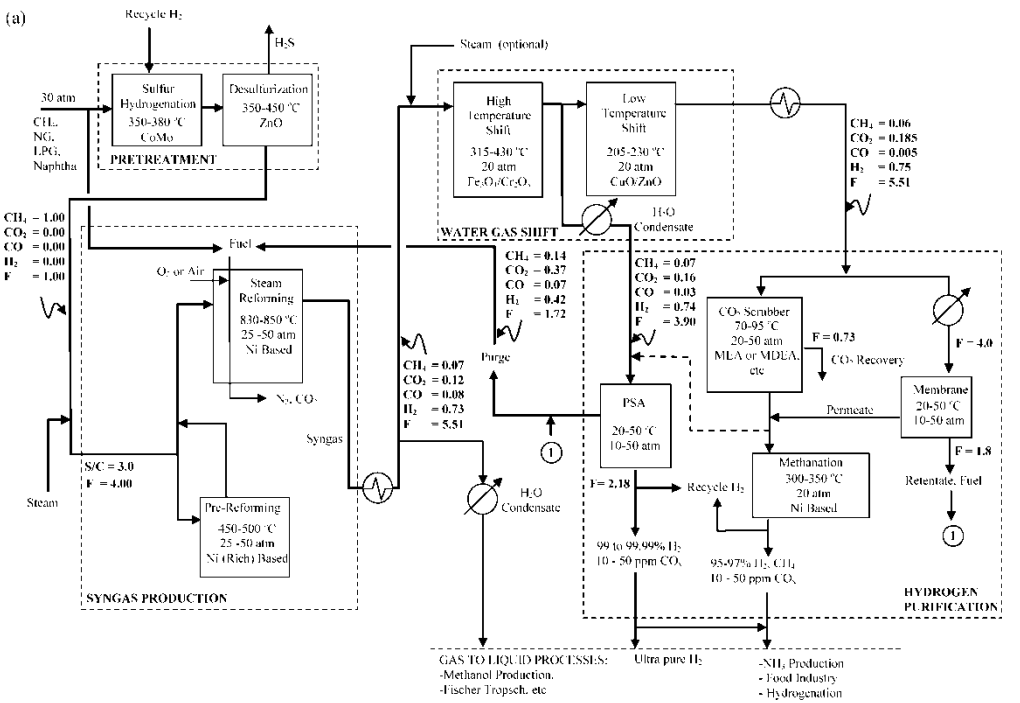

Figure 1(a). Flow sheet of a typical, state-of-the-art, large-scale hydrogen or syngas production plant incorporating a pre-reformer, a steam reformer, high and or low temperature water gas shift reactors, and an H_2 purification units such as absorption with methanation, pressure swing adsorption, or membrane with methanation. The F is a flow rate defined in arbitrary units with the feed flow rate being 1.0. The numbers to the right of the molecular symbols are stream composition numbers in mol or vol%.

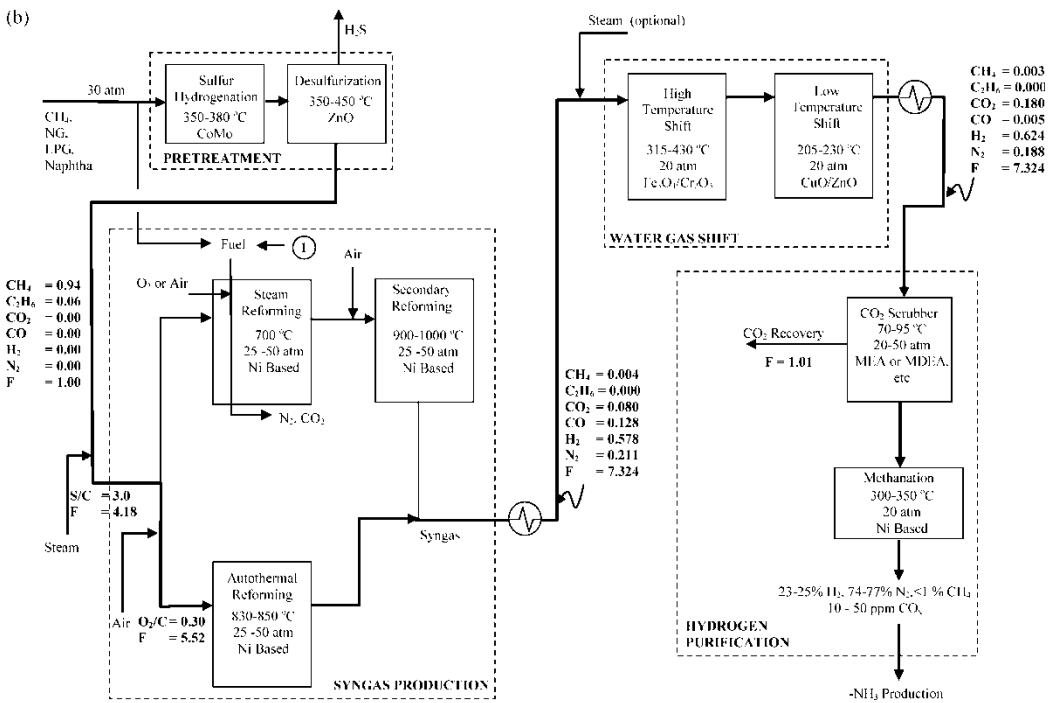

Figure 1(b). Flow sheet of a typical, state-of-the-art, large-scale ammonia production plant incorporating a steam reformer and possibly a secondary reformer or a partial oxidation reactor, high and or low temperature water gas shift reactors, and a H_2 purification unit such as absorption with methanation. The F is a flow rate defined in arbitrary units with the feed flow rate being 1.0. The numbers to the right of the molecular symbols are stream composition numbers in mol or vol%.

Downloaded by [University of South Carolina] at 12:58 08 June 2016

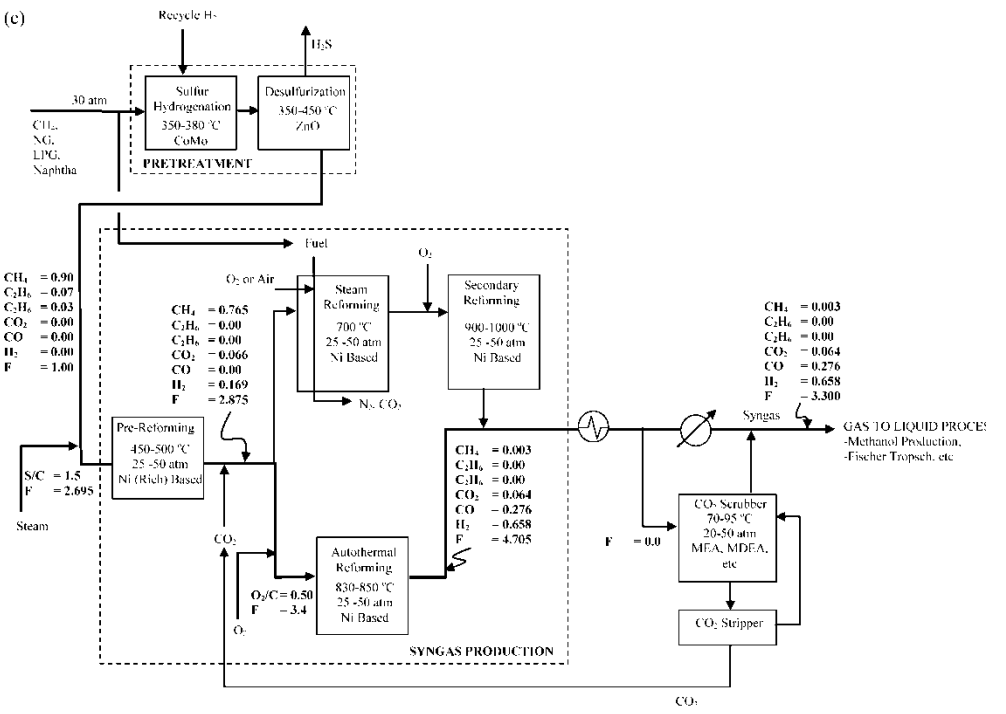

Figure 1(c). Flow sheet of a typical, state-of-the-art, large-scale syngas production plant incorporating a pre-reformer, a steam reformer and possibly a secondary reformer or an autothermal reformer, and absorption based H_2 purification unit. The F is a flow rate defined in arbitrary units with the feed flow rate being 1.0. The numbers to the right of the molecular symbols are stream composition numbers in mol or vol%.

Downloaded by [University of South Carolina] at 12:58 08 June 2016

Downloaded by [University of South Carolina] at 12:58 08 June 2016

Table 1. Licensors of hydrogen plants, type of plant, production rate, and number of plants worldwide

Licensor H_2 plants	System	Sizes (MMsfd)	Plants worldwide
Linde AG	SR-WGS(HT)-PSA	1–100	250
Technip	SR-WGS(HT)-PSA	—	220
Uhde	SR-WGS(HT)-PSA	−130	56
Haldor Topsøe	SR-WGS(HT)-PSA	0.2–200	21
UOP LLC	PSA (Polybed)	−200	700
UOP LLC	Membrane (Polysep)	−320	50
Howe-Baker engineers	SR-WGS(HT)-PSA	1–90	170
Foster wheeler	SR-WGS(HT)-PSA	1–95	100
Lurgi Oel-Gas-Chemie	SR-WGS(HT)-PSA	1–200	105
Haldor Topsøe	Methanol SR-PSA	−1	10
Air products	Membrane (PRISM)	—	270
Air products	PSA (PRISM)	15–120	270

Reference: Hydrocarbon Processing, Gas Processes 2002, Gulf Publishing Co. SR = steam reforming, WGS = water gas shift, HT = High temperature, PSA = pressure swing adsorption.

The use of adsorption for H_2S removal is a more novel approach. Activated carbon (via pressure swing adsorption) and ZnO have been particularly successful. In the latter case, a ZnO cartridge is used to trap the H_2S ($ZnO + H_2S \rightarrow ZnS + H_2O$) at about 350 to 450°C. Because of the high operating temperature, this approach offers the advantage of being able to process gases containing heavier hydrocarbons. Once the ZnO becomes

Table 2. Licensors of ammonia plants, type of plant, production rate, and number of plants worldwide

Licensor ammonia plants	System	Sizes (mtpd)	Plants worldwide
Linde AG	SR-WGS(HT)-PSA	230–1350	3
Uhde	SR-2R-WGS (HT-LT) CO_2 Scrubber-M	500–1800	14
Haldor Topsøe	SR-2R-WGS (HT-LT)-CO_2 Scrubber-M	650–2050	60
Kellogg Brown & Root, Inc	ATR-WGS (HT-LT)-CO_2 Scrubber-M	−1850	200

Reference: Hydrocarbon Processing, Petrochemical Processes 2003, Gulf Publishing Co. SR = steam reforming, 2R = secondary reformer, WGS = water gas shift, HT = high temperature, LT = low temperature, PSA = pressure swing adsorption, M = methanator.

Table 3. Licensors of methanol plants, type of plant, production rate, and number of plants worldwide

Licensor methanol plants	System	Sizes (mtpd)	Plants worldwide
Davy process technology	PR-SR	2000–3000	55
Uhde	SR	−1250	11
Haldor Topsøe	PR-ATR	—	—
Haldor Topsøe	PR-SR	−3030	—
Lurgi Oel-Gas-Chemie	PR-ATR	−5000	37

Reference: Hydrocarbon Processing, Petrochemical Processes 2003, Gulf Publishing Co. PR = Pre-reformer, SR = steam reforming, ATR = authothermal reformer.

saturated, air at 700°C is used to regenerate the cartridge to form SO_2, which is subsequently removed via absorption.

After desulfurization, steam methane reforming is then carried out at 780 to 900°C and 25 to 35 atm using an alkali-promoted Ni catalyst supported on alumina. The reaction is:

$$CH_4 + H_2O \longrightarrow CO + 3H_2 \quad (\text{endothermic: } \Delta H = 227\,\text{kJ/mol}) \qquad (1)$$

This reaction is highly endothermic and hence requires a substantial energy input. However, steam methane reforming produces the greatest number of hydrogen molecules per molecule of methane and some of the needed energy can be obtained from combustion of recycled product gases, CO and H_2, and unconverted CH_4.

Table 4. Licensors of syngas plants, type of plant, production rate, and number of plants worldwide

Licensor syngas plants	System	Sizes (MMsfd)	Plants worldwide
Davy process technology	PR-SR	—	—
Conoco	POX	−500	—
Uhde	SR	−130	56
Haldor Topsøe	PR-ATR	—	21
Haldor Topsøe	SR	—	—
Howe-Baker Engineers	ATR	—	—
Syntroleum	ATR	25–1000	—
Air products	POX (ACORN)-cryogenic	—	11
Air products	SR (ACORN)-cryogenic	—	6

Reference: Hydrocarbon Processing, Gas Processes 2002, Gulf Publishing Co. R = Pre-reformer, SR = steam reforming, POX = partial oxidation, ATR = authothermal reformer.

Downloaded by [University of South Carolina] at 12:58 08 June 2016

In some cases, a pre-reformer is used, as shown in Figs. 1a and 1c. The pre-reformer is basically a reformer unit located up stream of the main (or primary) reformer that operates at a much lower temperature (400 to 500°C) to convert mostly ethane and heavier hydrocarbons into methane. As an ancillary bonus, it also reforms some of the methane into CO and H_2.

In other cases, a secondary reformer is used, as shown in Figs. 1b and 1c. The secondary reformer is basically a partial oxidation (POX) unit located downstream of the primary reformer to achieve maximum methane conversion. It uses oxygen (or air in the case of ammonia production) and operates at about 1000°C.

The partial oxidation (POX) of methane can be carried out with or without a catalyst. When a catalyst is not used the flame temperature ranges between 1300 and 1400°C at a pressure of 55 to 80 atm. The reactions that occur include:

$$CH_4 + O_2 \longrightarrow CO_2 + 2H_2 \quad (\text{exothermic and rapid: } \Delta H = -318\,\text{kJ/mol}) \tag{2}$$

$$2CH_4 + O_2 \longrightarrow 2CO + 4H_2 \quad (\text{exothermic and rapid: } \Delta H = -36\,\text{kJ/mol}) \tag{3}$$

$$CH_4 + 2O_2 \longrightarrow CO_2 + 2H_2O (\text{exothermic and rapid: } \Delta H = -802\,\text{kJ/mol}) \tag{4}$$

$$CH_4 + CO_2 \longrightarrow 2CO + 2H_2 (\text{endothermic and slow: } \Delta H = 247\,\text{kJ/mol}) \tag{5}$$

$$CH_4 + H_2O \longrightarrow CO + 3H_2 (\text{endothermic and slow: } \Delta H = 227\,\text{kJ/mol}) \tag{6}$$

with the resulting H to CO ratio being 1.6 to 1.8. The oxygen to carbon ratio is carefully controlled in this process to minimize soot formation, while maximizing H_2 production. This process takes advantage of the heat given off by reactions (2), (3), and (4). These reactions use a small fraction of O_2 (usually pure) in the feed to initiate and drive this process. Reaction (5) is environmentally attractive as it uses CO_2 as the reactant. It produces, however, the smallest number of hydrogen molecules per molecule of methane. It is also affected by the reverse water gas shift (RWGS) reaction, consuming product H_2 with reactant CO_2 according to:

$$CO_2 + H_2 \longrightarrow CO + H_2O \quad (\text{endothermic: } \Delta H^{o}_{298} = 41\,\text{kJ/mol}) \tag{7}$$

For the catalytic partial oxidation process, the flame temperature is lower, i.e., between 780 and 900°C, and the pressure is reduced to between 25 and 35 atm. The catalyst is generally similar to or the same as the SMR catalyst, being comprised of supported nickel. In this case, the resulting H to CO ratio is 1.8 to 3.0.

Downloaded by [University of South Carolina] at 12:58 08 June 2016

Downloaded by [University of South Carolina] at 12:58 08 June 2016

The POX process does not require a desulfurization step (an economic advantage). However, it commonly employs an oxygen plant to provide enriched or pure O_2 to avoid processing N_2 downstream (an economic disadvantage). In some cases, such as in ammonia production, some N_2 is desirable, as it is needed in the syngas to provide the correct composition to the ammonia production unit.

When steam and oxygen (possibly as air) are mixed with methane and fed to a reactor, the process is generally referred to as autothermal reforming (ATR). In practical terms, ATR utilizes the highly exothermic combustion process of POX through reaction (4) to supply the energy needed for the endothermic SMR reactions in the same reactor. Combustion takes place in the first zone of the reactor, with the product gases carrying the energy needed to initiate and sustain the SMR reactions in the second zone. ATR not only has the same control issues associated with the ratio of carbon to oxygen as POX does, but it also has to consider the effects of this ratio on conversion in the SMR zone.

SMR is more common for industrial hydrogen production and maintains an economic edge for the three processes, except for very large installations where ATR becomes more cost effective. A key factor is the air separation unit for POX and ATR. However, POX, and to a lesser extent ATR, are more effective for handling diverse hydrocarbon feedstocks, such as naphthas. Natural gas is still the preferred feedstock when considering the current cost of methane relative to crude oil (1). The data in Tables 1 to 4 show that typical hydrogen plants use steam reforming (SMR), whereas methanol production plants tend to use ATR, and syngas production plants use either ATR or POX, with ammonia production plants using steam reforming or ATR. Typical flow sheets are provided in Figs. 1a, 1b and 1c.

Depending on the application, a water gas shift (WGS) reactor may be needed downstream of the reformer or partial oxidation unit to decrease the CO concentration in the reformer and to improve H_2 production and purity (refer to Figs. 1a and 1b). For example, a typical equilibrium limited SMR converts from 70 to 80% of the CH_4 with a product composition given in Fig. 1a (10, 11). Note the high concentration of CO at around 8 vol%. After the WGS reactors, the CO concentration is reduced to around 0.5 vol%. Both high temperature (HT) and low temperature (LT) WGS reactions are commercially practiced. The HT WGS reaction uses an iron/chrome oxide catalyst and operates in the range of 350 to 500°C. The LT WGS reaction uses a copper/zinc oxide catalyst and operates in the range of 180 to 250°C. The WGS reaction proceeds as:

$$CO + H_2O \longrightarrow CO_2 + H_2 \quad (\text{exothermic: } \Delta H^{o}_{298} = -41\,\text{kJ/mol}) \quad (8)$$

In some cases the LT WGS can be eliminated. For example, both HT and LT WGS reactors are used in the reformer/wet scrubbing process, whereas only

the HT WGS reaction is used in the reformer/pressure swing adsorption process (see below) (5).

H_2 Purification

The separation technology used in H_2 production depends on the application, the desired H_2 purity and the downstream impact of CO or N_2. Four different H_2 purification technologies are widely practiced in industry; these include absorption, both chemical and physical, adsorption, membranes, and cryogenic processes (9). Prior to 1980 (5), the CH_4 reforming step was followed by both a high and low temperature shift process to convert CO to H_2. Wet scrubbing, with a weak base (potassium carbonate) or an amine (ethanolamine) was then used to remove CO_2. Typical feed compositions to the wet scrubber are provided in Fig. 1. The remaining CO and CO_2 are sent to a methanation reactor (the opposite of reforming) to reduce the carbon oxides to around 50 ppmv. This wet scrubbing process, which is still in operation today, produces a product stream containing 95-97 vol% H_2, 2–4 vol% CH_4 and 0–2 vol% N_2. In general, wet scrubbing is commonly used in the production of ammonia, as high purity H_2 is not needed (Table 4).

In the early 1980s, new hydrogen plants were being built with pressure swing adsorption (PSA) units as the main H_2 purification process. This eliminated the CO_2 scrubber, the low temperature CO shift reactor, and the methanation reactor. PSA is able to produce very pure H_2 by removing relatively high concentrations of CO and CO_2 (12, 13). A typical feed composition to the PSA unit is provided in Fig. 1a. The PSA unit offers advantages of improved product purity (99–99.99 vol% H_2, 100 ppmv CH_4, 10–50 ppmv carbon oxides, and 0.1–1.0 vol% N_2) with capital and operating costs comparable to those of wet scrubbing. Modern PSA plants for H_2 purification generally utilize layered beds containing 3 to 4 adsorbents (silica gel/alumina for water, activated carbon for CO_2, and 5A zeolite for CH_4, CO, and N_2 removal). Depending on the production volume requirements, anywhere from four to sixteen columns all operate in tandem. A typical 10-bed PSA unit can produce 120 MMscfd H_2 at high purity and a recovery of 90%. The PSA unit is operated at ambient temperature with a feed pressure ranging between 20 and 60 atm. The hydrogen recovery depends on the desired purity, but ranges between 60 and 90%, with the tail gas (i.e., the desorbed gas containing H_2O, N_2, CO_2, CH_4, CO, and H_2) generally being used as fuel for the reformer. In general, PSA is used in the production of high purity H_2, with purities in some cases exceeding 99.9999 + vol%. A list of companies with PSA H_2 plants in operation and their corresponding capacities is provided in Tables 1 and 2.

Membrane processes, such as the Polysep membrane systems developed by UOP and the PRISM membrane systems developed by Monsanto, and now sold by Air Products and Chemicals Inc., (3) recover H_2 from various refinery,

Downloaded by [University of South Carolina] at 12:58 08 June 2016

petrochemical, and chemical process streams. Both are based on polymeric asymmetric membrane materials composed of a single polymer or layers of at least two different polymers, with the active polymer layer most likely being a polysulfone. The Prism system is based on a hollow fiber design and the Polysep system is based on a spiral wound sheet type contactor. Both are used to recover H_2 from refinery streams at purities ranging from 70 to 99 vol% and recoveries ranging from 70 to 95%. Figure 1a depicts one example of where a membrane separation unit is used commercially in a hydrogen production plant. Relatively pure H_2 containing a very low concentration of CO_2 leaves this unit in the low pressure permeate stream. This stream can be sent to a methanator for CO_2 removal and further purification. The high pressure retentate stream, consisting of H_2 and CO_2 with low concentrations of CO and CH_4, can be used as fuel. Table 1 provides some information on the number of membrane plants and their H_2 production capacities.

Standard condensation processes are used to remove excess water in hydrogen production (Figs. 1a, 1b and 1c). Cryogenic separation processes are generally used in the production of high purity CO and moderately pure H_2 from syngas. These processes are also used to adjust the composition of the syngas for a chemical feedstock unit, especially in the production of ammonia (14). Cryogenic systems are applied to recover high purity H_2 from refinery off gas streams containing C_{2+} liquid products. A list of companies that utilize cryogenic H_2 purification is provided in Table 4.

A detailed understanding of these commercial H_2 production processes provides an essential basis for guiding future research and development to achieve improvements and breakthroughs in adsorption and membrane technology. The goal is to achieve energy savings and improved process performance and economics. To set forth recommendations for future research and development on hydrogen production, key factors must be considered: the large scale of industrial production, materials requirements, economic goals and drivers, and purity demands. To this end, emerging literature concepts in adsorption and membrane technology for H_2 production and purification are reviewed and then recommendations are set forth for future research and development. It is anticipated that this review will provide valuable guidance to funding agencies, and useful suggestions for industrial and academic researchers, to facilitate the development of applicable, new technologies.

EMERGING LITERATURE CONCEPTS

For this review, a focus has been placed on emerging concepts in the separation sciences to overcome the equilibrium limitations for H_2 production and purification. The potential for novel adsorbents and membranes, and associated processes, particularly for high temperature operations are outlined. There are two major thrusts to this approach: to use new adsorption

Downloaded by [University of South Carolina] at 12:58 08 June 2016

and or membrane technologies to drive reversible reactions in the reformer, shift or partial oxidation reactors, and to facilitate the purification of H_2 downstream from the reactors. Many opportunities are identified, including hybrid systems that can afford significant improvement.

Adsorption

The emerging literature concepts on the use of adsorbents and adsorption processes in the production of H_2 by SMR, POX, and ATR have been rather focused since the commercial implementation of PSA for downstream H_2 purification about 20 years ago. The ongoing research includes

1. PSA process refinements,
2. sorption enhanced reaction processes (SERP) or periodic adsorptive separating reactors, and
3. selective adsorbents for CO_2 and CO.

These studies have the potential for both near term and longer term impact on the adsorptive applications for H_2 production. A brief summary of each of these emerging areas is provided below.

PSA Process Refinements

The major breakthrough in PSA technology for large-scale H_2 purification came in the early 1970's with the development of a 4-bed, multi-layer PSA process (discussed above). Since that time modifications have added additional beds, typically 7 to 10 beds (15), as many as 16 beds (16), and sometimes tanks for storing intermediate process streams between cycle stages. Along with more beds and tanks came more complex cycle sequencing to achieve higher throughputs with the same or even less volume of adsorbent distributed in the additional beds. Each bed undergoes several adsorption and regeneration cycle steps including:

1. pressurization,
2. high pressure feed,
3. co-current depressurization,
4. counter-current depressurization,
5. counter-current purge, and
6. several equalization (pressurization/depressurization) steps between two beds.

Potential for improvements can be realized by further refinement of these complex cycle steps and their sequencing to create a separation process.

Downloaded by [University of South Carolina] at 12:58 08 June 2016

For H_2 PSA technology, as with many other commercial processes, what initially appeared to be a rather trivial evolutionary process improvement, has had the impact of a revolution. New PSA cycling strategies have had this effect. As an example, Whysall and Wagemans of UOP (16) recently demonstrated that the duration of the purge step does not have to be equal to or less than the duration of the adsorption step and by extending the purge step, the production capacity of a PSA H_2 plant, for the first time, could exceed 110 Nm^3/hr using 16 beds. Baksh et al. of Praxair Technology, Inc. (17, 18) decreased the number of PSA beds with the judicious use of storage tanks to collect and reuse gas during cycle steps, to increase H_2 production per unit adsorbent. Baksh et al. (19) also show that the PSA process performance can be improved significantly by first removing N_2 from the feed stream using modified (via cation exchange) X-type zeolite adsorbents, which also advantageously remove CO_2. Xu et al. of Air Products and Chemicals Inc. (20) modified the pressure equalization steps by using four steps with just six beds, and decreasing the cycle time for pressure equalization between beds (21). Chen et al. of The BOC Group Inc. (22, 23) show how to recover CO from a typical SMR plant using a unique two-phase PSA cycle sequence, by using a CO selective adsorbent impregnated with Cu(I) for complexation with CO. Kapoor et al., also of The BOC Group Inc. (24), show how to augment an existing H_2 plant to produce CO from syngas more effectively by using an additional PSA unit containing a CO selective adsorbent. Sircar and Golden (25) describe several other novel, rather complex, approaches to PSA cycle sequencing not only for H_2 purification, but also for simultaneous H_2 and CO_2 purification. The latter PSA cycle involves two interconnected cascades of PSA beds each operating with their own unique cycle sequence and number of beds. It is clear that there are numerous ways to arrange and operate PSA processes. Many improved novel PSA cycle sequences are anticipated for use in H_2 production plants, based on continued industrial and academic research.

Another way to improve the performance of a PSA process is to decrease the cycle time, which allows more gas to be processed using less adsorbent. This is referred to as rapid cycle PSA. For example, QuestAir Technologies Inc. has recently announced improved H_2 purification technology with a rapid cycle PSA unit with a rotary valve. This technology is planned for installation in the largest liquid H_2 plant in Asia to be fabricated in Japan. Rapid cycle PSA is not a new concept. However, it required major innovations in process design for handling the gas streams before commercialization became feasible. This innovation has been reported in a series of patents by Keefer et al. of QuestAir Technologies Inc. (26–28), which describe the rotary valve and multi-bed cycle sequencing approaches. Adsorbent attrition and intraparticle mass transfer effects still limit how rapid the cycle sequencing can be carried out.

Adsorbent attrition and intraparticle mass transfer effects have been partly alleviated with the recent development of novel structured adsorbents,

Downloaded by [University of South Carolina] at 12:58 08 June 2016

Downloaded by [University of South Carolina] at 12:58 08 June 2016

incorporating very small commercially available adsorbent particles or crystals, like activated carbons and zeolites, in a support material like a sheet of paper. In this way, the effects of mass transfer and adsorbent attrition are minimized. Structured adsorbent materials are described in the recent patents by Golden et al. (29–31) and Keefer et al. (32). A second generation, ultra rapid cycle PSA H_2 purification system was developed recently by researchers at QuestAir Technologies Inc., wherein a rotary adsorbent bed concept has supplanted the rotary valve concept, with the rotary adsorbent bed being comprised of multiple beds within one cylindrical adsorber unit (33). This unique configuration has resulted in a very compact PSA unit that can be operated at very short cycle times and thus very high H_2 production rates. Further improvements in this technology will require the continued development of new structured, multilayered adsorbents, with each layer containing an adsorbent that is selective to one or more of the gases to be separated.

Over the past decade academic researchers have also focused on the development, understanding, and optimization of new PSA cycle configurations for H_2 purification. Zhou et al. (34) recently explored novel PSA cycle configurations for H_2 purification to decrease the required feed pressure and minimize the number of beds by using storage tanks. Biegler and co-workers (35) are developing important optimization tools for multi-bed PSA processes, especially for H_2 purification, that when perfected should allow for significant improvements in the PSA process performance by simple process tuning. Finally, Warmuzinski and coworkers (36, 37), and Lee and co-workers (38–41) are attempting to design a multi-layered adsorbent bed through mathematical simulation and bench scale experimentation. The complexity between the different cycle steps in a H_2 purification PSA unit has recently been reported by Waldron and Sircar (42). More research and development is recommended in this area.

Sorption Enhanced Reaction Processes (Periodic Adsorptive Separating Reactors)

Conducting reaction and adsorptive separation in a single fixed bed reactor configuration dates back at least to 1987, beginning with the work of Kadlec and co-workers (43–45). The general idea is to use the adsorbent to selectively remove one or more of the products formed from an equilibrium limited reaction to shift the equilibrium in favor of increased conversion. The adsorbent is then regenerated with a pressure or temperature swing. Improved adsorbents with greater selectivity, larger working capacity, more rapid adsorption and desorption kinetics, and reduced sensitivity to moisture and other poisons are required for this approach to become of commercial interest. Finally, all these characteristics are required at elevated temperatures that are optimum for the reaction. These higher temperatures are typical of the regeneration conditions for most commercial adsorbents like zeolites,

activated carbons, activated aluminas, or silica gels. Hence, for many applications operation at the high reactor temperatures requires the development of new adsorbents.

A team at Air Products and Chemicals Inc. has developed adsorptive separating reactors using what they refer to as a sorption enhanced reaction process (SERP). SERP is a fixed bed process with the reactor containing a mixture of a conventional catalyst and a high temperature adsorbent that is selective to one of the products produced during the catalytic reaction. For an equilibrium limited reaction, the adsorbent shifts the equilibrium in favor of higher conversion through Le Chatlier's principal. When the adsorbent becomes saturated with the product a simple pressure swing in the bed can be used to regenerate it. In a series of patents (11, 46–49) and three publications (50–52), this group shows a redesign of the methane reforming operation. For this approach a high temperature CO_2 selective adsorbent is mixed with a typical reforming catalyst to conduct the SMR and WGS reactions in one unit and at lower temperatures than used in SMR. Reforming can be practiced at these lower temperatures because of the *in situ* removal of CO_2 (46, 49). Medium purity H_2 production (~95%) was achieved by conducting this SERP process in a WGS reactor using a shift catalyst and at least two CO_2 selective adsorbents. The feed for this unit was obtained from a conventional SMR (53).

For CO production, the SERP concept was modified by using a conventional SMR with a CO-vacuum swing adsorption (VSA) unit containing a CO-selective adsorbent, with the tail gas being sent to a reverse WGS (RWGS) sorption enhanced reaction (SER) unit (11, 47). This RWGS SER unit was used to convert CO_2 and H_2 into more CO and H_2O using a typical shift catalyst mixed with an H_2O-selective adsorbent to remove H_2O from the product gas, again to shift the equilibrium in favor of CO production. The CO stream was then sent to the CO-VSA unit for purification, and some fuel was produced. By integrating a CO_2 TSA unit with commercially available CO_2 selective adsorbents such as 5A and 13X zeolites and aluminas, and a RWGS SER unit, the production of high purity CO was improved (48).

In a more general patent, three uses of the SERP concept are discussed (54). In the first case SMR is driven using CO_2 and or CO selective adsorbents. In the second case, methane reforming with CO_2 can be revamped by using CO or H_2 selective adsorbents. In the third case, H_2O selective adsorbents are used in the production of CO using a RWGS reactor. An emphasis is placed on the judicious use of these different adsorptive reactors to optimize the production of H_2, CO or syngas from the reforming of methane. There appears to be significant potential for the development of new adsorbents for use with the SERP concept.

The success of the SERP relied on CO_2, H_2O, and even H_2 selective adsorbents. A CO selective adsorbent such as Cu(I) or Ag(I) on silica-alumina was also utilized in a VSA unit for producing a pure CO stream as

Downloaded by [University of South Carolina] at 12:58 08 June 2016

the heavy product. The preferred CO_2 adsorbents include: K-promoted hydrotalcite like compounds (HTlcs), modified double layer hydroxides, spinels and modified spinels, with metal oxides and mixed metal oxides of Mg, Mn, La, and Ca, and clay minerals such as sepiolite and dolomite (46, 48, 49, 53, 54). The preferred H_2O adsorbents include commercially available A, X, and Y zeolites, mordenites and aluminas and silica gel (11, 47, 54). The preferred H_2 adsorbents include metal hydrides such as Pd, PdAg, MgNi, FeTi, and LaNi (54). The preferred CO adsorbents include Cu(I) or Ag(I) on silica-alumina (54). Examples of novel, yet relevant, uses of metal hydrides for H_2 purification and separation include:

1. the purification of H_2 by PSA (55);
2. a PSA/TSA process for the methanation of carbon oxides using fluorinated metal hydrides (56); and
3. analysis of a novel PSA cycle for H_2 purification and concentration that relies on the shape of the metal hydride H_2 adsorption isotherm to be unfavorable (i.e., an inverted Langmuir isotherm) (57).

Clearly, a wide range of commercially available and developmental adsorbent materials can be used within the confines of the SERP concept.

Harrison and co-workers (58–60) have been researching the SERP for the steam reforming of methane in a single unit using a TSA cycle to remove CO_2 reversibly from the reaction product gas with CaO. Rodrigues and co-workers (61–68), and also Alpay and co-workers (69, 70), have been studying the performance of the SERP for the steam reforming of methane (SMR) in a single unit using a PSA cycle to remove CO_2 reversibly from the reaction product gas using a K-promoted HTlc. The continued experimental validation of modeling analyses, coupled with the study of various PSA cycle sequences, should contribute to the understanding of this type of adsorptive reactor system, and to optimizing its performance.

It is clear that these SERPs allow SMR, WGS, and or RWGS reactors to operate at reduced temperatures or pressures, and can reduce or eliminate downstream separation and purification units, while producing high purity H_2, CO, or syngas. Although the SERP concept seems to work well, industrial acceptance of this technology has been limited. Again, further implementation of this SERP would be fostered with the development of improved adsorbents, especially high temperature adsorbents.

Selective Adsorbents

There are many opportunities other than SERP for new selective adsorbents in the H_2 production plant. The areas with the most active research involve:

1. CO_2 selective adsorbents at ambient, and especially elevated, temperatures for selective CO_2 removal from reaction products, and

Downloaded by [University of South Carolina] at 12:58 08 June 2016

2. CO selective adsorbents to remove CO from streams containing CO_2.

Other adsorbents that may contribute to improved processes include:

1. commercially available H_2O selective adsorbents such as A, X and Y type zeolites, mordenites, aluminas and silica gels, and
2. H_2 selective adsorbents such as metal hydrides, e.g. Pd, PdAg, MgNi, FeTi, and LaNi.

It is worth pointing out that the H_2 capacity of literally thousands of metal hydrides and their alloys have been studied for years. Typical capacities range from 1 to 2 wt% H_2 for the LaNi and FeTi hydrides at ambient temperatures and pressures of around 100 to 200 psia, to MgH_2 exhibiting the highest known H_2 capacity of around 7 wt% at 200°C and similar pressures (71, 72). However, most metal hydrides are O_2 and H_2O sensitive, and some are CO sensitive Thus, the development of improved and stabilized metal hydrides is recommended.

In this section below, only high temperature CO_2 selective adsorbent development and ambient temperature CO selective adsorbent development are considered. The commercially available H_2O and H_2 selective adsorbents discussed above have a successful track record in industrial applications. Table 5 summarizes the typical capacities of commercial and developmental CO_2 and CO selective adsorbents.

Table 5. Typical capacities of commercial and developmental CO_2 and CO selective adsorbents

Adsorbent	Adsorbate	T (°C)	P (torr)	Loading (mol/kg)	Mode
Act. carbon	CO_2	25	500	1.5–2.0	PSA
Act. carbon	CO_2	250–300	500	0.1–0.2	PSA
5A zeolite	CO_2	25	500	~3.0	PSA
5A zeolite	CO_2	250	500	0.2	PSA
HTlc (K-promoted)	CO_2	300–400	200–700	0.4–0.7	PSA
Double-layer hydroxides	CO_2	375	230	1.5	PSA
Alumina (un-doped)	CO_2	400	500	0.06	PSA
Alumina (doped w/ Li_2O)	CO_2	400	500	0.52	PSA
Alumina (basic)	CO_2	300	500	0.3	PSA
Li zirconate	CO_2	500	760	3.4–4.5	TSA
CaO	CO_2	500	150	4–8	TSA
CaO	CO_2	700	76	7	TSA
Cu(I) (alumina)	CO	25–30	760	0.8–1.2	PSA
Cu(I) (alumina)	CO	30	760	0.8	PSA

Downloaded by [University of South Carolina] at 12:58 08 June 2016

Downloaded by [University of South Carolina] at 12:58 08 June 2016

A recent review on CO_2 absorbents by Yong et al. (73) covered activated carbons, zeolites, metal oxides and hydrotalcite compounds (HTlcs) for reversible adsorption. The overall conclusion is that activated carbons and zeolites are superior to metal oxides and HTlcs for ambient temperature applications. Yet, for high temperature applications metal oxides and HTlcs are preferred over activated carbons and zeolites. Typical activated carbons exhibit 1.5 to 2.0 mol/kg CO_2 adsorption at 25°C and 500 torr, which decreases to 0.1 to 0.2 mol/kg at 250 to 300°C and 500 torr. Similarly, 5A zeolite exhibits ~3.0 mol/kg at 25°C and 500 torr, and 0.2 mol/kg at 250°C and 500 torr. Clearly, the capacities of these materials would be less than 0.1 mol/kg at the temperatures associated with the SMR, WGS and RWGS reactive adsorbers.

For selective adsorbents, the K-promoted HTlc materials exhibit a high and pressure-reversible CO_2 capacity at temperatures compatible with SMR, WGS and RWGS applications (74, 75). Mayorga et al. (75) at Air Products and Chemicals Inc. report synthesis procedures and operational capacities for both HTlcs and double layer hydroxides. Rodriques and co-workers (76–78) have characterized HTlcs for CO_2 adsorption at ambient and elevated temperatures, as have Alpay and co-workers (69, 70). Overall, the reversible CO_2 capacities typically range between 0.4 and 0.7 mol/kg at 300 and 400°C and 200 and 700 torr, even in the presence of steam. This performance is highly dependent on the synthesis and pretreatment conditions. Double layer hydroxides exhibit even higher reversible capacities in the presence of steam, typically of around 1.5 mol/kg at 375°C and 230 torr (75). These adsorbents are attractive not only for SERPs, but also for high temperature PSA processes, as shown recently by Ritter and co-workers (79).

Several teams are also exploring alumina as a high temperature and pressure-reversible CO_2 adsorbent for use in a PSA cycle (73, 80). The CO_2 capacity of aluminas undoped and doped with metal oxides and carbonates ranges from 0.06 (undoped) to 0.52 (doped with 9 wt% Li_2O) mol/kg at 400°C and 500 torr (80), which is similar to that reported by Yong et al. (73) for commercially available basic aluminas, ~0.3 mol/kg at 300°C and 500 torr.

Lithium zirconate and CaO can function as high temperature, CO_2 selective adsorbents with temperature reversibility. Lin and co-workers are exploring the zirconates (81–83), as is Nair (84) in Japan. Typical CO_2 adsorption capacities are high at 3.4 to 4.5 mol/kg at 500°C and 760 torr, with reasonable regeneration rates exhibited at 780°C that improve with CO_2 free purge gas (82). The sensitivity of these materials to H_2O vapor has not been reported.

CaO adsorbents are being investigating by Fan (85–87), Harrison (58–60), Kuramoto (88) in Japan, and Abanades (89) in Spain. These materials are also showing high CO_2 capacities at high temperatures with reasonable regeneration rates. For example, typical reversible CO_2 capacities range between 4 to 8 mol/kg at 500°C and 150 torr, with regeneration carried out

at 900°C in N_2 (88). A similarly high CO_2 capacity of 7 mol/kg resulted for a CaO exposed to 76 torr of CO_2 and cycled over 50 times at 700°C using N_2 for purge. This is a large reversible CO_2 capacity. These CaO adsorbents are very sensitive to sulfur; but, the sensitivity to H_2O vapor has not been reported (85). The operating temperature range of this material may be too high for most SMR, WGS, and RWGS reactors, however.

π-complexation adsorbents for CO have been known since 1977 based on the patent literature (90, 91). These adsorbents generally consist of a high surface area support (i.e., silica, alumina, or zeolite) that contains a monolayer of a transition metal salt such as Cu(I) or Ag(I). Variations of these initial CO-selective materials are under development for selective CO removal from gas streams that contain CO_2. Peng and co-workers at Air Products and Chemicals Inc. (92–94) developed a supported Cu(CO)Cl complex for CO adsorption. Lin and co-workers (95) have also developed a CO adsorbent utilizing supported CuCl on mesoporous alumina via a sol-gel process. Similarly, Hirai and coworkers (96, 97) have been developing CO selective adsorbents based on complexing Cu(I) halide, such as Cu(I)-ethanediamine supported on silica gel.

The capacity of these Cu(I) π-complexation adsorbents for CO is reported as 0.8 and 1.2 mol/kg at 25 to 30°C and 760 torr, with a reasonable working capacity of 1.2 mol/kg over 76 to 760 torr at 30°C (94). A similar working capacity of 0.8 mol/kg between 0.6 and 760 torr at 30°C, has been reported by Hirai and coworkers (96, 97). Examples on the use of such CO-selective adsorbents can be found in the recent patents by the BOC Group Inc. (22, 24) for the production of high purity CO from typical SMR streams using VSA cycles.

Additional research and development on CO_2 and CO selective adsorbents are recommended for use at ambient and elevated temperatures, and in combination with PSA and TSA cycle development. This recommendation is based on the use of Cu(I) π-complexation adsorbents for CO being limited because the gas stream must first be dried to avoid poisoning of the active metal ion; hence, improved moisture sensitivity is needed. This recommendation is also based on the fact that an improved reversible capacity is needed the for the high temperature CO_2 selective adsorbents to make them more commercially attractive.

Membranes

The emerging literature concepts and the corresponding publications on the use of membranes in the production of H_2 by SMR, POX, and ATR are quite substantial compared to the adsorption literature. Therefore, the membrane patent literature is not discussed in this review; instead, Table 6 provides an accounting summary of the patent literature. Over 430 patents have been issued since 2000 for hydrogen selective membranes. Four

Downloaded by [University of South Carolina] at 12:58 08 June 2016

classes of membranes dominate: O_2 permeable membranes, H_2 permeable membranes, H_2 permeable polymeric membranes, and CO_2 permeable membranes. Table 7 provides a list of researchers working on O_2 selective membranes. Tables 8 to 13 provide lists of researchers working on H_2 selective membranes. Table 14 provides a list of researchers working on CO_2 selective membranes. Tables 15 and 16 provide detailed information about the selectivities and permeances of these membrane materials. A review of each of these emerging membrane areas is provided below.

Downloaded by [University of South Carolina] at 12:58 08 June 2016

Oxygen Permselective Membranes

The development of improved oxygen permselective membranes is essential for the commercial implementation of syngas production via partial oxidation (POX). POX is an exothermic process, which produces a lower H_2/CO ratio (=2) than steam reforming and provides advantages in syngas production, Fischer-Tropsch chemistry and other gas to liquid processes. POX processes can operate at lower temperatures and pressures providing energy savings. However, there are several issues that still make this technology unattractive.

A key issue for POX implementation is the use of pure O_2, which adds to the capital cost of a large O_2 plant. The use of air is generally avoided, because N_2 requires expensive downstream separation. This is not an issue for ammonia production plants where downstream N_2 separation is not required. Here air is the preferred oxidant. A second issue is the need for a uniform distribution of oxygen in the catalytic reactors to avoid hot spots or deep oxidation that reduces efficiency. Oxygen selective membranes can help resolve both of these problems: air can be fed to the shell side of a catalytic membrane reactor so the oxidation (POX) can be conducted with greater control. Enriched nitrogen can be produced as a by-product.

Modified perovskites of the general formula ABO_3 are being developed as O_2 permselective membranes. For ABO_3, A is an alkali metal and B is commonly a lanthanide or a first row transition metal. Modifications $A_xA'_{1-x}B_yB'_{1-y}O_{3-\delta}$ using heterovalent elements A′ and B′ to create local defects and oxygen vacancies in the crystal structure, afford an enhanced material that is both an electronic and an ionic conductor—known as a mixed conductor. The presence of vacancies is represented by the generic letter δ, to indicate that the valence of $A_xA'_{1-x} + B_yB'_{1-y}$ becomes less than six. The O^{2-} anion conductivity is achieved by replacing cations A and B with acceptor cations A′ or B′ of lower charge. Thus, the perovskite structure affords fertile ground for modifications to tailor properties.

Modified perovskite membranes such as $Ba_{0.5}Sr_{0.5}Co_{0.8}Fe_{0.2}O_{3-\delta}$ (98–100), $La_{0.2}Sr_{o.8}Fe_{0.2}Co_{0.8}O_x$ (101), $La_{0.3}Sr_{0.7}Co_{0.8}Ga_{0.2}O_{3-\delta}$ (102), $SrFe_{0.7}Al_{0.3}O_{3-\delta}$ (102), $SrCo_{0.5}FeO_x$ (99, 101, 103) have been investigated in tandem with packed catalyst beds (normally Ni based). Catalytic membranes, such as La_2NiO_4 (104), can eliminate the need for packed

Table 6. Number of patents issued since 2000 on hydrogen selective membranes

	Total	Pd based	Inorganic	Organic
Total	431	127	113	287
Membrane Technology and Research Inc	22	0	1	11
Praxair Technology Inc	17	1	3	2
Idatech LLC	13	6	0	1
The Regents of the University of California	15	2	2	5
Symyx Technologies Inc	8	0	0	4
UOP LLC	9	3	3	2
Air Products and Chemicals Inc	7	1	0	3
Plug Power Inc	8	0	1	3
ATI Properties Inc	5	1	0	0
Lynntech Inc	7	2	3	4
Walter Juda Associates Inc	5	5	0	0
Worcester Polytechnic Institute	5	5	0	0
Proton Energy Systems	6	1	0	2
Texaco Development Corporation	4	0	0	1
Battelle Memorial Institute	4	1	1	3
California Institute of Technology	7	0	3	6
Conoco Inc	3	1	1	1
Eltron Research Inc	3	2	2	1
Ford Global Technologies Inc	3	3	0	0
Siemens Westinghouse Power Corporation	3	2	1	1
The C & M Group LLC	3	2	2	2
The University of Chicago	3	0	2	0
University of Wyoming	3	3	0	1
Boc Group Inc	2	0	1	1
Borst Inc	2	0	0	0
BP Amoco Corporation	2	0	0	0
Conocophillips Company	2	0	0	1
Corning Incorporated	2	0	2	1
Engelhard Corporation	2	0	1	0
General Motors Corp	2	1	2	0
Honda Motor Co Ltd	2	0	0	2
Honeywell International Inc	2	0	0	1
HRL Laboratories LLC	2	0	0	0
HY9 Corporation	2	2	1	0
International Fuel Cells LLC	2	1	0	1
Johnson Electro Mechanical Systems LLC	2	0	0	0
Massachusetts Institute of Technology	2	1	1	0
Microcoating Technologies Inc	2	0	0	1
Millennium Cell Inc	2	1	0	1
Nanoset LLC	2	1	0	1
Niagara Mohawk Power Corporation	2	0	0	1
Northwest Power Systems LLC	2	2	0	0

(*continued*)

Downloaded by [University of South Carolina] at 12:58 08 June 2016

Table 6. Continued

	Total	Pd based	Inorganic	Organic
Perkinelmer Instruments LLC	2	0	0	2
Quantum Group Inc	2	1	1	1
Rensselaer Polytechnic Institute	2	0	0	2
The BOC Group Inc	2	0	1	0
The Gillette Company	2	1	0	0
The Regents of the University of Colorado	2	0	2	1
Ztek Corporation	2	0	0	1

Downloaded by [University of South Carolina] at 12:58 08 June 2016

catalyst beds. It has been hypothesized (98) that part of the gaseous hydrocarbons fully combust at the reactor side surface of the perovskite membrane and then the resulting CO_2 and H_2O reform the remaining hydrocarbons into H_2 and CO. Both $Ba_{0.5}Sr_{0.5}Co_{0.8}Fe_{0.2}O_{3-\delta}$ (98–100) and $SrCo_{0.5}FeO_x$ (99, 101, 103) membranes have shown high throughput rates (i.e., >15 and 5 ml (STP)/min/cm^2, respectively) of feed gas with high methane conversion and CO selectivities $>95\%$. These flux rates are approaching projected commercialization targets (105). Although these results are promising, these membranes have not been widely used commercially, possibly for the reasons summarized below.

The high temperature stability, 850°C, of a $Ba_{0.5}Sr_{0.5}Co_{0.8}Fe_{0.2}O_{3-\delta}$ membrane was demonstrated by Shao and co-workers (99) up to 1000 hr. At lower temperatures, however, a decrease in oxygen permeability was observed. Apparently, this deterioration is not caused by the H_2O or CO_2 as observed elsewhere (9), but by a decomposition and segregation of the perovskite into two phases. In general, methane conversions and CO selectivities larger than 95% can be achieved if the membrane thickness (0.2–1.5 mm), the feed gas residence time (<0.1 s), and the temperature (750–950°C) are tuned such that the oxygen flux through the membrane ensures a CH_4/O_2 ratio of around 2. Attempts to achieve thinner membranes, longer residence times, or higher temperatures diminish the CO selectivity. Changes in the opposite direction diminish methane conversion. A broad summary on these membranes is provided in the work of Thursfield and Metcalfe (106).

Hydrogen Permselective Membranes

Using H_2 selective membranes to enhance hydrocarbon conversions for hydrogen and syngas production is receiving considerable attention. Selective separation of hydrogen at high temperatures is appealing for hydrogen and ammonia production plants, as it lowers the CO content, which subsequently reduces operational and capital costs for PSA units and methanators. These cost reductions are further maximized if H_2 selective membranes are incorporated into hybrid SMR, POX or WGS reactors. This approach will benefit

Downloaded by [University of South Carolina] at 12:58 08 June 2016

Table 7. Top investigators with more than three peer-reviewed publications on dense perovskite oxygen selective membranes for partial oxidation of methane (POX) and oxidative dehydrogenation of paraffins (ODP) since 1995 and their publications in these areas since 2003

	Investigators	Organization	1995 Total	POX	ODP	2003 Total	POX	ODP
1	W. Yang, G. Xiong	State Key Laboratory of Catalysis, Dalian Institute of Chemical Physics, Chinese Academy of Sciences, Dalian, P.R. China	36	20	7	10	6	3
2	V.V. Kharton, A.A. Yaremchenko, J.R Frade	Department of Ceramics and Glass Engineering, University of Aveiro, Aveiro, Portugal	32	7	0	16	6	0
3	Y.S. Lin	Department of Chemical Engineering, University of Cincinnati, Cincinnati, OH, USA	28	11	2	4	1	0
4	N. Xu	Membrane Science and Technology Research Center, Nanjing University of Technology, Nanjing, P.R. China	23	19	0	1	5	0
5	U. Balachandran	Energy Technology Division, Argonne National Laboratory, 9700 South Cass Avenue, Argonne, IL 60439, USA	14	13	0	1	1	0
6	H.J.M. Bouwmeester	Laboratory for Inorganic Materials Science, Department of Science and Technology & MESA + Research Institute, University of Twente, Enschede, The Netherlands	13	3	1	3	2	0
7	C.S. Chen	Department of Materials Science and Engineering, University of Science and Technology of China, Hefei, Anhui, PR China	13	2	0	7	2	0
8	T. Ishihara	Department of Applied Chemistry, Faculty of Engineering, Oita University, Oita, Japan	8	3	0	3	0	0

Topsoe, Inc. – EX1042
Page 24 of 71

Downloaded by [University of South Carolina] at 12:58 08 June 2016

9	Y.H. Ma	Center for Inorganic Membrane Studies, Dept. of Chemical Engineering, Worcester Polytechnic Institute, Worcester, MA, USA	7	7	0	10	0	0
10	A. C. van Veen, D. Farrusseng, C. Mirodatos	CNRS-IRC, Villeurbanne, France	6	0	3	4	3	0
11	A.J. Jacobson	Department of Chemistry, University of Houston, Houston, TX, USA	6	2	0	1	0	0
12	N. Yang	College of Materials Science and Engineering, Nanjing University of Technology, Nanjing, P. R. China	5	2	0	2	0	0
13	S. Diethelm	Laboratoire d'Energétique Industrielle, Lausanne, Switzerland	4	2	2	3	0	0
14	K.S. Lee	Energy Materials Research Team, Korea Institute of Energy Research, Yusong, Daejeon, South Korea	4	0	0	3	0	0
15	A. Atkinson	Department of Materials, Imperial College London, Exhibition Road, London SW7 2BP, UK	3	0	0	1	0	0
16	Z. Chen	Department of Chemical Engineering, Auburn University, Auburn, AL, USA	3	2	0	0	3	0
17	F.T. Ciacchi	CSIRO Manufacturing Science and Technology,Victoria, Australia	3	3	0	1	0	0
18	A. Bose	U.S. Department of Energy, NETL, Pittsburgh, PA, USA	3	0	0	0	0	0
19	C. Guizard, A. Julbe, C. Levy	Institut Européen des Membranes (CNRS UMR 5635), Montpellier, France	3	0	1	1	0	0
20	G. Liverini	Department of General and Environmental Physiology, University of Naples, Naples, Italy	3	0	0	0	0	0

Table 8. Investigators with the largest number of peer-reviewed publications in palladium based hydrogen selective membranes since 1995 and their publications since 2003

No.	Investigators	Organization	1995	2003
1	N. Itoh	National Institute of Advanced Industrial Science and Technology, Tsukuba, Japan	20	1
2	R. Hughes	Chemical Engineering Unit, University of Salford, Manchester, UK	20	1
3	A. Basile	Institute on Membrane Technology, University of Calabria, Rende, Italy	17	4
4	E. Kikuchi	Department of Applied Chemistry, School of Science and Engineering, Waseda University, Tokyo, Japan	14	1
5	B.P.A Grandjean	Department of Chemical Engineering and CERPIC, Laval University, St. Foy, Quebec, Canada	12	1
6	S. Uemiya	Department of Industrial Chemistry, Faculty of Engineering, Seikei University, Tokyo, Japan	12	1
7	V. Violante, S. Tosti A. Adrover	ENEA, Centro Ricerche di Frascati, Frascati, Rome, Italy	12	5
8	S Morooka, K. Kusakabe	Department of Applied Chemistry, Kyushu University, Fukuoka, Japan	11	1
9	F.A. Lewis	School of Chemistry, Queen's University, Belfast, North Ireland, UK	10	0
10	X.Q. Tong	Department of Material Sciences, Tsinghua University, Beijing, China	10	0
11	C. Nishimura, Y Zhang	National Institute for Materials Science, Tsukuba, Japan	9	4
12	H. Amandusson, L.G. Ekedahl, H. Dannetun	Department of Physics and Measurement Technology, Linköping University, Linköping, Sweden	8	0
13	H.I. Chen, T.C. Huang	Department of Chemical Engineering, National Cheng Kung University, Tainan, Taiwan	8	4
14	K. Kandasamy	Physics Department, University of Jaffna, Jaffna, Sri Lanka	8	0
15	K.H. Lee	Membranes and Separation Center, Korea Research Institute of Chemical Technology, Yusung, South Korea	7	1
16	S.I. Pyun	Department of Materials Science and Engineering, Korea Advanced Institute of Science and Technology, Yusong-Gu, South Korea	7	0

(*continued*)

Downloaded by [University of South Carolina] at 12:58 08 June 2016

Table 8. Continued

No.	Investigators	Organization	1995	2003
17	J.D. Way	Colorado School of Mines, Department of Chemical Engineering, Golden, CO, USA	9	3
18	P. Zoltowski	Institute of Physical Chemistry of Polish Academy of Sciences, Warsaw, Poland	7	2
19	Y.S. Lin	Chemical Engineering Department, University of Cincinnati, Cincinnati, OH, USA	6	1
20	J.K. Ali	Department of Chemical Engineering and Industrial Chemistry, Swiss Federal Institute of Technology, Zürich, Switzerland	6	0

industrial H_2 and ammonia production, as well as the manufacture of syngas for methanol production and Fischer-Tropsch synthesis.

A hybrid H_2-selective membrane reactor for steam reforming would enhance methane conversions at lower operational temperatures and cut steam consumption. A restricted amount of H_2O may also help reduce the production of CO_2 in the reformer, which is an important goal for gas to liquid syngas systems. Also, the ability to operate at lower temperatures in both syngas production units and WGS reactors would reduce coke formation, which is significantly suppressed at temperatures below 450°C. Less coking would reduce the frequency of catalyst regeneration, yielding less downtime and increased productivity.

Hydrogen selective membranes such as metallic and dense ceramics, as well as less selective porous inorganic and organic membranes, have been evaluated for commercial hydrogen separation. Because hydrogen is transported in dissociated form, both metallic and dense ceramic membranes can be 100% selective towards hydrogen. This particular ability allows for ultra pure hydrogen, containing little (<1 ppm) or no carbon oxides. However, none of the porous (Knudsen based) membranes have been able to meet hydrogen separation purity and economic requirements. Despite this, porous membranes can still be useful to drive equilibrium limited reactions. More research and development is needed to explore practical opportunities in this area.

To overcome the relatively low permeance and high cost of dense and metallic membranes researchers are exploring the utility of high permeance, less costly and less selective inorganic porous membranes. Enhanced conversions can be realized with these membrane systems. Because of the relatively large content of carbon oxides ($>>100$ ppm) and possibly methane, hydrogen streams produced from these membranes are limited to fuel use or sent to a

Downloaded by [University of South Carolina] at 12:58 08 June 2016

Table 9. Investigators with the largest number of peer-reviewed publications in palladium based hydrogen selective membranes since 2003

No.	Investigators	Organization	2003
1	H.I. Chen, T.C. Huang	Department of Chemical Engineering, National Cheng Kung University, Tainan, Taiwan	5
2	V. Violante, S. Tosti, A. Adrover	ENEA, Centro Ricerche di Frascati, Frascati, Rome, Italy	5
3	H.D. Tong	MESA + Research Institute, University of Twente, Enschede, The Netherlands	4
4	A. Basile	Institute on Membrane Technology, University of Calabria, Rende, Italy	4
5	C. Nishimura, Y. Zhang	National Institute for Materials Science, Tsukuba, Japan	4
6	F.C. Gielens	Department of Chemical Engineering and Chemistry, Eindhoven University of Technology, Eindhoven, The Netherlands	3
7	S.I. Yamaura	Institute for Materials Research, Tohoku University, Katahira, Japan	3
8	J. Munera, L.M. Cornaglia, E.A. Lombardo	Instituto de Investigaciones en Catálisis y Petroquímica, Santiago del Estero, Argentina	3
9	Y.H. Ma	Department of Chemical Engineering, Worcester Polytechnic Institute, Worcester, MA, USA	3
10	J.D. Way	Colorado School of Mines, Department of Chemical Engineering, Golden, CO, USA	3
11	K.S. Rothenberger	National Energy Technology Laboratory (NETL), US Department of Energy, Pittsburgh, PA, USA	2
12	M.R. Rahimpour	Department of Chemical Engineering, Shiraz University, P.O. Box 71345, Shiraz, Iran	2
13	P. Zoltowski	Institute of Physical Chemistry of Polish Academy of Sciences, Warsaw, Poland	2
14	M.P. Harold	Department of Chemical Engineering, University of Houston, Houston, TX, USA	2
15	L. Wang	National Institute of Advanced Industrial Science and Technology, Tsukuba, Japan	2
16	C. Ramesh	Indira Gandhi Centre of Atomis Research, Materails and Chemistry Division, Kalpakkam, Tamil Nadu, India	2
17	S. Yamaguchi	Research Institute, Chiba Institute of Technology, Narashino, Japan	2

(*continued*)

Downloaded by [University of South Carolina] at 12:58 08 June 2016

Table 9. Continued

No.	Investigators	Organization	2003
18	S. Uemiya	Department of Industrial Chemistry, Faculty of Engineering, Seikei University, Tokyo, Japan	1
19	K.H. Lee	Membranes and Separation Center, Korea Research Institute of Chemical Technology, Yusung, South Korea	1
20	Y.S. Lin	Chemical Engineering Department, University of Cincinnati, Cincinnati, OH, USA	1

Downloaded by [University of South Carolina] at 12:58 08 June 2016

PSA train for further purification. Inorganic and organic, particularly glassy ($T_g > 100°C$) membranes, can also be used for hydrogen recovery from tail gas streams of PSA units, which normally operate at around room temperature. For improved purity, these H_2 streams can be sent back to a PSA unit for further processing.

Among hydrogen selective membranes, Pd membranes remain the most promising. These Pd based membranes have limitations that have restricted commercial use, however. Key limitations include embrittlement, thin films that are free of cracks or pinholes (hillocks), delamination, and sulfur poisoning. The current state of Pd membrane research is summarized by Collot (9), Uemiya (107), Kikuchi (108, 109), Paglieri and Way (110) and Armor (111). In addition, Rothenberger et al. (112) provides an extensive summary on the performance of Pd membranes.

Hydrogen selective membrane systems that can function with high flux are needed for the huge H_2 flows of a typical steam reformer or WGS reactor. The flux levels of state-of-the-art Pd membranes are inadequate and need improvement by a factor of 2–4 times to become economically attractive. As a result, current research is focused on the consistent preparation of thinner Pd films, i.e., $\sim$5 μm, that can still afford high selectivity. This approach is designed to address flux and economic issues.

Thin Pd membranes deposited on a porous support, such as porous alumina or porous metal are able to withstand operating conditions typical of H_2 manufacture processes. Pd film deposition has been carried out via chemical vapor deposition (CVD) (108, 109, 113), electroless plating (108, 109, 114–119), a sol-gel method (120), spray pyrolysis, sputtering (121), and solvated metal atom deposition (113) on inert porous supports (inconel, SS or alumina). Among these techniques, electroless deposition currently appears to be the most reliable. For example, Pan et al. (114) prepared 2–3 μm thick films of Pd impregnated alumina that show stable permeances of 125 mol m^{-2} s^{-1} Pa^{-1} with H_2/N_2 selectivities of 1000 for about 800 hr of continuous operation.

Table 10. Top investigators with more than two peer-reviewed publications on the use of hydrogen selective membranes for steam reforming since 2000 and their publications since 2003

No.	Investigators	Organization	2000	2003
1	Z.X. Chen, S.S.E.H. Elnashaie, P. Prasad	Department of Chemical Engineering, Auburn University, Auburn, Alabama	12	9
2	A. Basile	Institute on Membrane Technology, University of Calabria, Rende, Italy	8	5
3	J. Munera, L.M. Cornaglia E.A. Lombardo	Instituto de Investigaciones en Catálisis y Petroquímica, Santiago del Estero, Argentina	5	5
4	T. Tsuru	Department of Chemical Engineering, Hiroshima University, Higashi-Hiroshima, Japan	4	1
5	Y.M. Lin	Center for Environmental, Safety and Health Technology Development, Industrial Technology Research Institute, Chutung, Taiwan	4	2
6	M.E.E. Abashar	Department of Chemical Engineering, College of Engineering, King Saud University, Riyadh, Saudi Arabia	3	1
7	G. Barbieri	Research Institute on Membrane Technology, University of Calabria, Rende, Italy	3	0
8	C.S. Chen	Laboratory of Advanced Functional Materials and Devices, Department of Materials Science and Engineering, University of Science and Technology of China, Hefei, P.R. China	3	0
9	G. Xiong	State Key Laboratory of Catalysis, Dalian Institute of Chemical Physics, Chinese Academy of Sciences, Dalian, P.R. of China	3	0
10	S.T. Oyama	Environmental Catalysis and Materials Laboratory, Department of Chemical Engineering, Virginia Tech., Blacksburg, Virginia	3	1
11	T.T. Tsotsis	Department of Chemical Engineering, University of Southern California, Los Angeles, California	3	1
12	C.T. Au	Department of Chemistry, Centre for Surface Analysis and Research, Hong Kong Baptist University, Hong Kong, China	2	0

(*continued*)

Downloaded by [University of South Carolina] at 12:58 08 June 2016

Table 10. Continued

No.	Investigators	Organization	2000	2003
13	H.I. de Lasa	Chemical Reactor Engineering Centre, University of Western Ontario, London, Ontario, Canada	2	0
14	J.R. Grace	Department of Chemical and Biological Engineering, University of British Columbia, Vancouver, BC, Canada	2	1
15	S. Uemiya	Department of Industrial Chemistry, Faculty of Engineering, Seikei University, Tokyo, Japan	2	1
16	T. Yamaguchi	Department of Chemical System Engineering, The University of Tokyo, Tokyo, Japan	2	1
17	Y. Matsumura	Research Institute of Innovative Technology for the Earth, Kizu-cho, Soraku-gun, Kyoto, Japan	2	2

Membranes of palladium and its alloys are also promising for hybrid membrane reactor systems. Palladium membranes have been used in lab scale catalytic POX (119, 122–124), SMR (108, 109, 113, 116–119, 125–131), CO_2 reforming (132, 133), and WGS (134–139) reactors to drive methane conversions. Modeling analyses of these systems can be found in the works of Aasberg et al. (135), Barieri et al. (140), Marigliano et al.

Table 11. Top investigators with more than two peer-reviewed publications on the use of hydrogen selective membranes for water gas shift reaction since 2000

No.	Investigators	Organization	2000
1	A. Basile	Institute on Membrane Technology, University of Calabria, Rende, Italy	6
2	V. Violante, S. Tosti, A. Adrover	ENEA, Centro Ricerche di Frascati, Frascati, Rome, Italy	4
3	E. Drioli	Department of Chemical Engineering and Materials, University of Calabria, Rende, Italy	3
4	J.D. Way	Colorado School of Mines, Department of Chemical Engineering, Golden, Colorado	2
5	J.C.D. da Costa	Australian Research Council (ARC) Centre for Functional Nanomaterials, School of Engineering, The University of Queensland, Brisbane, Qld 4072, Australia	2

Downloaded by [University of South Carolina] at 12:58 08 June 2016

Downloaded by [University of South Carolina] at 12:58 08 June 2016

Table 12. Top investigators with more than three peer-reviewed publications on the use of porous inorganic hydrogen selective membranes since 1995, divided into silica, zeolite or other oxide (zirconia or titania) membranes

No.	Investigators	Organization	Total	SiO_2	Zeolite	ZrO_2 or TiO_2
1	K. Kukasabe, S. Morooka	Department of Applied Chemistry, Kyushu University, Fukuoka, Japan	24	13	11	4
2	K.H. Lee	Membrane and Separation Research Center, Korea Research Institute of Chemical Technology, Yuseong, Daejeon, South Korea	11	11	0	0
3	H. Ohya, T. Takeuchi	Department of Material Science and Chemical Engineering, Yokohama National University, Yokohama, Japan	9	7	0	4
4	S.T. Oyama	Department of Chemical Engineering, Virginia Polytechnic Institute and State University, Blacksburg, VA, USA	9	8	0	0
5	G.J. Hwang	Hydrogen Energy Research Center, Korea Institute of Energy Research, Daejeon, South Korea	8	8	0	0
6	M. Asaeda, T. Tsuru	Department of Chemical Engineering, Hiroshima University, Higashi-Hiroshima, Japan	6	6	0	5

Downloaded by [University of South Carolina] at 12:58 08 June 2016

7	Y.S. Lin	Department of Chemical Engineering, University of Cincinnati, Cincinnati, OH, USA	6	3	5	2
8	M. Nomura	Department of Advanced Nuclear Heat Technology, Japan Atomic Energy Research Institute, Ibaraki, Japan	6	6	1	0
9	R. Hughes	Chemical Engineering Unit, University of Salford, Manchester, UK	5	3	0	0
10	M. Watanabe	Laboratory of Electrochemical Energy Conversion, Faculty of Engineering, Yamanashi University, Takeda, Kofu, Japan	5	4	1	1
11	J.A. Dalmon	Institut de Recherches sur la Catalyse, Centre National de la Recherche Scientifique, Villeurbanne Cedex, France	4	0	4	0
12	S. Yamaura	Institute for Materials Research, Tohoku University, Katahira, Japan	3	0	0	0
13	H. Verweij	Laboratory for Inorganic Materials Science, Faculty of Chemical Technology, University of Twente, P.O. Box 217 7500 AE Enschede The Netherlands	3	3	0	0

Downloaded by [University of South Carolina] at 12:58 08 June 2016

Table 13. Top investigators with more than two peer-reviewed publications on the use of porous inorganic hydrogen selective membranes since 2003, divided into silica, zeolite or other oxide (zirconia or titania) membranes

No.	Investigators	Organization	Total	SiO_2	Zeolite	ZrO_2 or TiO_2
1	K.H. Lee	Membrane and Separation Research Center, Korea Research Institute of Chemical Technology, Yuseong, Daejeon, South Korea	7	7	0	0
2	K. Kukasabe	Department of Applied Chemistry, Kyushu University, Fukuoka, Japan	6	2	4	2
3	M. Nomura	Department of Advanced Nuclear Heat Technology, Japan Atomic Energy Research Institute, Ibaraki, Japan	5	5	0	0
4	G.J. Hwang	Hydrogen Energy Research Center, Korea Institute of Energy Research, Daejeon, South Korea	4	4	0	0
5	S.T. Oyama	Department of Chemical Engineering, Virginia Polytechnic Institute and State University, Blacksburg, VA, USA	9	3	0	0
6	S. Yamaura	Institute for Materials Research, Tohoku University, Katahira, Japan	3	0	0	0
7	N.E. Benes	Laboratory of Inorganic Materials Science, Faculty of Chemical Technology and MESA$^+$ Research Institute, University of Twente, Enschede, The Netherlands	2	2	0	0
8	D. Fritsch	Institut für Chemie, GKSS Forschungszentrum Geesthacht, Geesthacht, Germany	2	1	0	1
9	Q. Wei	University of Science and Technology of China, Department of Materials Science and Engineering, Hefei, P.R China	2	2	0	1
10	J. Yan	Tongji University, Shanghai, P.R China	2	0	2	0

Topsoe, Inc. – EX1042
Page 34 of 71

Downloaded by [University of South Carolina] at 12:58 08 June 2016

Table 14. Top investigators involved in CO_2 selective membranes useful for H_2/CO_2 separation since 1995 and their publications since 1995 and 2002

No.	Investigators	Organization	Type	1995	2002
1	R.J. Spontak & N.P. Patel	Department of Chemical and Biomolecular Engineering, North Carolina State University, Raleigh, NC, USA	Dense polymeric	8	6
2	I. Pinnau & R.W. Baker	Membrane Technology and Research, Inc., Menlo Park, CA, USA	Dense polymeric	8	4
3	B.D. Freeman	Department of Chemical Engineering, University of Texas at Austin, Austin, TX, USA	Dense polymeric	13	2
4	K.I. Okamoto	Department of Advanced Materials Science & Engineering, Faculty of Engineering, Yamaguchi University, Ube, Yamaguchi, Japan	Dense polymeric	5	3
5	L.S. Teo	Department of Chemical Engineering, National Cheng Kung University, Tainan, Taiwan	Dense polymeric	3	0
6	K.K. Sirkar	Department of Chemical Engineering, Center for Membrane Technologies, New Jersey Institute of Technology, Newark, NJ, USA	Facilitated transport & capillary contactor	14	4
7	K.H. Lee	Membranes and Separation Research Center, Korea Research Institute of Chemical Technology, Taejon, S. Korea	Capillary contactor, facilitated transport	13	8
8	Z. Wang	Chemical Engineering Research Center, Tianjin University, Tianjin, Peop. Rep. China. Chinese Journal of Chemical Engineering	Facilitated transport	5	5
9	H. Matsuyama & M. Teramoto	Department of Chemistry and Materials Technology, Kyoto Institute of Technology, Matsugasaki, Sakyo-ku, Kyoto, Japan	Dense polymeric capillary contactor, facilitated transport	21	4
10	Q. Yuan	Dalian Institute of Chemical Physics, Chinese Academy of Sciences, Dalian, Peop. Rep. China	Facilitated transport	3	3

(*continued*)

Topsoe, Inc. – EX1042
Page 35 of 71

Downloaded by [University of South Carolina] at 12:58 08 June 2016

Table 14. Continued

No.	Investigators	Organization	Type	1995	2002
11	R. Noble	Department of Chemical Engineering, University of Colorado, Boulder, CO, USA.	Facilitated transport	5	2
12	R. Quinn	Corporate Science and Technology Center, Air Products and Chemicals, Inc., Allentown, PA, USA	Facilitated transport	5	1
13	J.D. Way	Department of Chemical Engineering, University of Colorado, Boulder, CO, USA	Surface flow	2	1
14	S. Sircar	Air Products and Chemicals, Inc., Allentown, PA, USA	Surface flow	4	0
15	G.F. Versteeg & V.Y. Dindore	Institute for Kjemisk Processteknologi, NTNU, Trondheim, Norway	Capillary contactor	8	8
16	P.H.M. Feron	TNO Institute of Environmental Sciences, The Netherlands	Capillary contactor	10	6
17	J. Sanchez	Institut Europeen des Membranes-UM2, Montpellier, Fr.	Capillary contactor, dense polymeric	5	5
18	O. Falk-Pedersen	Kvaerner Process Systems, Sandefjord, Norway	Capillary contactor	7	4
19	S.T. Hwang	Department Chemical Engineering, University Cincinnati, Cincinnati, OH, USA	Capillary contactor	3	3
20	B.L. Knutson	Department of Chemical and Materials Engineering, University of Kentucky, Lexington, KY, USA	Capillary contactor	5	2
21	R. Wang	Institute of Materials Research and Engineering, Singapore, Singapore	Capillary contactor	2	2
22	Z.K. Xu	Institute of Polymer Science, Zhejiang University, Hangzhou, Peop. Rep. China	Capillary contactor	2	2

Topsoe, Inc. – EX1042
Page 36 of 71

Downloaded by [University of South Carolina] at 12:58 08 June 2016

Table 15. Performance of various state-of-the-art hydrogen selective membranes in terms of selectivity and permeability

Support	Method	X	Selectivity			X permeability (barrers)[a]	X permeance (10−8 mol/s/ m^2/Pa)	References
			X/N_2	X/CO_2	X/CH_4			
Mullite	No treatment	H_2	∼2.5–4.0 at 823 K	∼3.0–5.0 at 823 K	∼2.0–3.0 at 823 K		720 at 823 K	(153, 154)
Mullite	TEOS, sol-gel/ coating	H_2	∼2.7–3.7 at 823 K	∼3.2–4.7 at 823 K	∼2.0–2.8 at 823 K		250–430 at 823 K	(153, 154)
γ-Alumina	No treatment	H_2			∼2.2 at 873–923 K		2100–2200 at 873–923 K	(150)
γ-Alumina	TEOS, CVD for 2 h at 873 K	H_2		∼8.0 at 873 K	∼8.0 at 873 K		100 at 873 K	(150)
γ-Alumina	TEOS, CVD for 4 h at 873 K	H_2		∼55.0 at 873 K	∼85.0 at 873 K		50 at 873 K	(150)
γ-Alumina	TEOS, CVD for 4.5 h at 873 K	H_2		∼180.0 at 873 K	∼300.0 at 873 K		30 at 873 K	(150)
γ-Alumina	TEOS, CVD for 1 h at 923 K	H_2		∼14.0 at 923 K	∼14.0 at 923 K		120 at 923 K	(150)
γ-Alumina	TEOS, CVD for 1.7 h at 923 K	H_2		∼180.0 at 923 K	∼280.0 at 923K		30 at 923 K	(150)
γ-Alumina	Zeolite, SiO_2:Al_2O_3: Na2O (9:10:22.5), sol gel	H_2			∼2.0–1.7 at 573–973 K		—	(152)
Vycorglass	No treatment	H_2		∼4.26 at 873 K	∼2.76 at 873 K		4 at 873 K	(147, 148)
γ-Alumina	Zeolite, SiO_2:Al_2O_3: Na2O (9:10:22.5), sol gel	H_2		5.5–3.5 at 298–973 K	9.5–4 at 298–973 K		55–20 at 298–973 K	(151)

(*continued*)

Downloaded by [University of South Carolina] at 12:58 08 June 2016

Table 15. Continued

Support	Method	X	Selectivity X/N_2	Selectivity X/CO_2	Selectivity X/CH_4	X permeability (barrers)[a]	X permeance (10−8 mol/s/ m^2/Pa)	References
γ-Alumina	Ru, 1 deposited layer	H_2	∼2.8 at 773 K				3490 at 773 K	(175)
γ-Alumina	Ru, 2 deposited layers	H_2	∼2.4 at 773 K				1800 at 773 K	(175)
Alumina	TEOS + MTES, hydrophobic, sol-gel/coating	H_2		∼3.0–6.0 at 298–473 K			90–130 at 298–473 K	(157)
Alumina	TEOS + MTES, hydrophilic, sol-gel/coating	H_2		∼2.0–3.0 at 298–473 K			0.37–0.15 at 298–473 K	(157)
γ-Alumina	TEOS, sol-gel/ coating	H_2	∼20 at 473 K	∼5 at 473 K			5 at 473 K	(176)
γ-Alumina	TEOS + organic surfactant, sol-gel/ coating	H_2	∼15 at 473 K	∼5 at 473 K			2 at 473 K	(176)
α-Alumina	TEOS, sol-gel/ coating	H_2	∼3.9–2.7 at 673 K				89–120 at 673 K	(177)
α-Alumina	TEOS, sol-gel/ coating + 1 to 5 times Pd acetate soaking and VD	H_2	∼4.0–11.0 at 673 K				∼2.7–6 at 673 K	(177)
Si_3N_4	Polysilizane (PSZ), coating	H_2	∼83–141 at 423–573 K	∼55–93 at 423–573 K	∼205–325 at 423–573 K		0.35–1.3 at 423–573 K	(178)
α-Alumina	TEOS, CVD for 2–3 h at 600 deg;C, sol-gel/ coating	H_2	∼40–50 at 673 K				40–50 at 673 K	(179)

Topsoe, Inc. – EX1042
Page 38 of 71

Downloaded by [University of South Carolina] at 12:58 08 June 2016

α-Alumina	TEOS, CVD for 2.5 h at 600°C, sol-gel/coating + evacuation	H_2	~4 at 673 K			1.3 at 673 K	(179)
Stainless steel	TEOS, sol-gel/coating	H_2	>110 at 523 K	>101 at 523 K		~200 at 523 K	(180)
α-Alumina	Polydimethylsilane + aluminum acetyl-acetonate, coating + pyrolisis at 573 K	H_2	~13–4 at 298–473 K		~10–4 at 298–473 K	0.5–1.0 at 298–473 K	(181)
α-Alumina	Polydimethylsilane + aluminum acetyl-acetonate, coating + pyrolisis at 773 K	H_2	~5 at 298–473 K		~5–4 at 298–473 K	0.2–0.65 at 298–473 K	(181)
α-Alumina	Polydimethylsilane + aluminum acetyl-acetonate, coating + pyrolisis at 973 K	H_2	~6–2 at 298–473 K		~6–2 at 298–473 K	0.08–0.11 at 298–473 K	(181)
Carbon molecular sieve	No treatment	H_2	~16.5 at 473–673 K		~2–4 at 473–673 K	~8.0–9.0 at 473–673 K	(182)
α-Alumina	$PdEDTA^{2-}$ dispersed in γ-alumina, sol-gel/coating	H_2	>1000 at 703 K			~86–124 at 703 K	(114)
Vycor-4 nm	No-treatment	H_2	3.9 at 523 K		2.9 at 523 K	1.62 at 523 K	(153, 154)

(*continued*)

Topsoe, Inc. – EX1042
Page 39 of 71

Downloaded by [University of South Carolina] at 12:58 08 June 2016

Table 15. Continued

Support	Method	X	Selectivity			X permeability (barrers)[a]	X permeance (10−8 mol/s/m^2/Pa)	References
			X/N_2	X/CO_2	X/CH_4			
α-Alumina	TEOS, sol-gel coating, catalytic membranes	H_2			∼17–27 at 573–773 K		20–30 at 573–773 K	(145)
α-Alumina	TEOS, sol-gel coating, catalytic membranes	H_2		15 at 573–773 K	47 at 573–773 K		200 at 573–773 K	(158)
α-Alumina	TEOS + ZTBO, sol-gel coating	H_2	∼83–70 at 573–773 K	∼7–23 at 573–773 K	∼27–35 at 573–773 K		700–500 at 573–773 K	(144)
α-Alumina	TEOS + ZTBO, sol-gel coating + hdrotreatment	H_2	50–200 at 573–773 K	50–200 at 573–773 K	50–200 at 573–773 K		170–50 at 573–773 K	(144)
Polybenzimidazole	Meniscus method	H_2		∼6–20 at 523 K		∼13–18 at 523 K		(183)
Alumina	Ru, CVD	H_2	6.5 at 773 K				345 at 773 K	(109, 110)
Alumina	Pt, CVD	H_2	280 at 773 K				286 at 773 K	(109, 110)
Alumina	Pd, CVD	H_2	13 at 773 K				325 at 773 K	(109, 110)
Alumina	Pd (8 μm), electro-less-plating	H_2	inf.				345 at 773 K	(109, 110)

Topsoe, Inc. – EX1042
Page 40 of 71

Downloaded by [University of South Carolina] at 12:58 08 June 2016

α-Alumina	Pd-Cu, electroless deposition, 4 μm	H_2	11–63 at 723 K			28–110 at 723 K	(184)
Polyimide	N_2 Pyrolysis at 973 K for 3.6 min	H_2	~100 at 353 K	~6 at 353 K	~130 at 353 K	~33.4–54 at 353 K	(185)
Polyimide	N_2 Pyrolysisat 1123 K for 3.6 min	H_2	~215 at 353 K	~14 at 353 K	~630 at 353 K	~6 –10 at 353 K	(185)
Polyimide	Pyrolysis, vacuum	H_2	~64–110 at 823 K			12.5–15.8 at 823 K	(186)
Polyimide	Pyrolysis, Ar, He or CO_2	H_2	~7.0–35.0 at 823 K			13.5–25 at 823 K	(186)
α-Alumina	γ-Alumina + polycarbosilane pyrolyzed at 823	H_2	~2.5 at 283 K	~1.0 at 283 K		~130 at 283 K	(187)
α-Alumina	γ-Alumina + polycarbosilane pyrolyzed at 823	H_2	~4.5 at 573 K	~2.7 at 573 K		~80 at 573 K	(187)
α-Alumina	γ-Alumina + polycarbosilane pyrolyzed at 673	H_2	~14.5 at 573 K	~4 at 573 K		~8 at 573 K	(187)

[a]A 1 μm thick membrane with a permeability of 1 barrer will present a permeance of 3.346×10^{-10} mol s^{-1} m^{-2} Pa^{-1}.

Topsoe, Inc. – EX1042
Page 41 of 71

Downloaded by [University of South Carolina] at 12:58 08 June 2016

Table 16. Performance of various state-of-the-art hydrogen and carbon dioxide selective membranes in terms of selectivity and permeability

Support	Method	X	Selectivity			X permeability (barrers)	X permeance (10−8 mol/s/m2/Pa)	References
			X/N_2	X/CO_2	X/CH_4			
Polyimide	Casting	He	95.4 at 308 K	2.49 at 308 K	3.03 at 308 K	20.8 at 308 K		(188)
Polyimide	Polyimide/2,4,6-triaminopyrimidine mixed-matrix, casting	He	1281.2 at 308 K	14.79 at 308 K	1242.4 at 308 K	2.87 at 308 K		(188)
Polyimide	Polyimide/4A zeolite mixed-matrix, casting	He	44 at 308 K	2.14 at 308 K	4.77 at 308 K	20 at 308 K		(188)
Polyimide	Polyimide/13X zeolite mixed matrix, casting	He	39.7 at 308 K	1.6 at 308 K	11 at 308 K	53.5 at 308 K		(188)
Polyimide	Polyimide/4A zeolite/2,4,6-triaminopyrimidine mixed-matrix, casting	He	1281.8 at 308 K	12.54 at 308 K	7733.33 at 308 K	2.32 at 308 K		(188)
Polyimide	Polyimide/13X zeolite/2,4,6-triaminopyrimidine mixed-matrix, casting	He	563 at 308 K	7.77 at 308 K	1012.5 at 308 K	4.87 at 308 K		(188)
Polysulfone	Silicone, coating for 6–10 min	H_2	~20–51 at 323 K				~0.89–1.39 at 323 K	(189)
Alumina	Polyimide/silica (AprTMOS) mixed matrix w/wo TMOS sol-gel coating	H_2	~4–9 at 363 K	~6–7 at 363 K		~11–18 at 363 K		(190)

Topsoe, Inc. – EX1042
Page 42 of 71

Downloaded by [University of South Carolina] at 12:58 08 June 2016

Alumina	Polyimide/silica (AprTMOS) mixed matrix w/wo TMOS sol-gel coating	H_2	~10–17 at 463 K	~6–12 at 463 K		~21–45 at 463 K		(190)
Alumina	Polyimide/silica (AprMDEOS) mixed matrix w/wo TMOS sol-gel coating	H_2	~14–23 at 363 K	~3–5 at 363 K		~52–63 at 363 K		(190)
alumina	Polyimide/silica (AprTMOS) mixed matrix w/wo TMOS sol-gel coating	H_2	~21–28 at 463 K	~4–8 at 463 K		~100–160 at 463 K		(190)
Polyethersulfone	No treatment	H_2	~7.5–21 at 303 K				8.5–2.1 at 303 K	(191)
Alumina	Styrene-divinylbenzene(Amberlite) in PPO + Chloroform	H_2			~6.5 at 333 K	450–600 at 333 K		(161)
Alumina	Styrene-divinylbenzene(Lewatit) in PPO + Chloroform	H_2			~10–40 at 333 K	1800–3900 at 333 K		(161)
Alumina	Ethylene dimethacrylate (Poly(EDMA) in PPO + Chloroform	H_2			~10–20 at 333 K	300 at 333 K		(161)
Alumina	Styrene-divinylbenzene(Hyp-St-DVB) in PPO + Chloroform	H_2			~66–300 at 333 K	1200–1800 at 333 K		(161)
Poly(aryl ether ketone), PEK-C	Casting	H_2	~80–50 at 298–373 K	~4–8 at 298–373 K	~146–71 at 298–373 K	~11–32 at 298–373 K		(192)

(*continued*)

Topsoe, Inc. – EX1042
Page 43 of 71

Downloaded by [University of South Carolina] at 12:58 08 June 2016

Table 16. Continued

Support	Method	X	Selectivity X/N_2	Selectivity X/CO_2	Selectivity X/CH_4	X permeability (barrers)	X permeance (10−8 mol/s/m2/Pa)	References
Poly(aryl ether ketone), DMPEK-C	Casting	H_2	∼91–54 at 298–373 K	∼4–8 at 298–373 K	∼125–81 at 298–373 K	∼10–30 at 298–373 K		(192)
Poly(aryl ether ketone), TMPEK-C	Casting	H_2	∼117–64 at 298–373 K	∼4–5 at 298–373 K	∼130–75 at 298–373 K	∼21–45 at 298–373 K		(192)
Poly(aryl ether ketone), IMPEK-C	Casting	H_2	∼38–30 at 298–373 K	∼2–4 at 298–373 K	∼45–35 at 298–373 K	∼42–70 at 298–373 K		(192)
PolyAmide–Imides	mPda/DAM, various ratios (1–8)	He	∼452–76 at 303 K	∼14–2 at 303 K		∼3–37 at 303 K		(193)
PolyAmide–Imides	1.5NaPda/DAM, various ratios (1–8)	He	∼162–75 at 303 K	∼5–2 at 303 K		∼8–37 at 303 K		(193)
PolyAmide–Imides	1.5NaPda/DETDA, various ratios (1–8)	He	∼200–30 at 303 K	∼7–1 at 303 K		∼7–34 at 303 K		(193)
Polysulfone	casting	H_2	∼46 at 298 K	∼1.8 at 298 K	∼50 at 298 K	11 at 298 K		(193)
PolyAmide–Imides	mPda/DAM (1–1) + LiCl (various contents)	He	∼130–387 at 303 K	∼4–15 at 303 K		∼16–5 at 303 K		(166)

Topsoe, Inc. – EX1042
Page 44 of 71

Downloaded by [University of South Carolina] at 12:58 08 June 2016

ZSM-5-18A	Sol-gel	H_2		0.83 at 298 K			24 at 298 K	(194)
ZSM-5-21A	Sol-gel	H_2	1.45 at 298 K	0.53 at 298 K	1.70 at 298 K		26 at 298 K	(194)
ZSM-5-22A	Sol-gel	H_2	1.43 at 298 K	0.34 at 298 K	3.20 at 298 K		20 at 298 K	(194)
ZSM-5-22B	Sol-gel	H_2		0.59 at 298 K			29 at 298 K	(194)
ZSM-5-28*A	Sol-gel	H_2	1.2 at 298 K	0.37 at 298 K	2.60 at 298 K		19 at 298 K	(194)
Poly(1-trimethyl-silyl-1-pro-pyne), PTMSP	Casting	H_2	92 at 298 K	0.45 at 298 K		~19000 at 298 K		(167)
Poly(1-methyl-1-pentyne), PMP	Casting	H_2	2.43 at 298 K	0.54 at 298 K	2 at 298 K	5800 at 298 K		(166)
Poly(tert-butyla-cetylene), PTBA	Casting	H_2	7 at 298 K	0.53 at 298 K	3.52 at 298 K	300 at 298 K		(166)
α-Alumina	γ-Alumina + polycarbosilane pyrolyzed at 673	H_2	~6 at 283 K	0.6 at 283 K			~6 at 283 K	(187)
Teflon	Casting	H_2	4.2 at 298 K	~0.92 at 298 K	5.2 at 298 K	3300 at 298 K		(195)
TFE-BDD copolymer	Casting	H_2	4.3 at 298 K	0.79–0.95 at 298 K	5.3–6.4 at 298 K	2100–3400 at 298 K		(165)
Vycor	HDFS, sol-gel coating	H_2	1.51 at 293 K	0.24 at 293 K	0.92 at 293 K			(172)
γ-Alumina	ODS, sol-gel coating	H_2	3.4 at 293 K	0.67 at 293 K	1.4 at 293 K		1.3 at 293 K	(173)
Air products SSF membrane		H_2		0.2 at 293 K		3.5 at 293 K		(171)

[a]A 1 μm thick membrane with a permeability of 1 barrer will present a permeance of 3.346 × 10−10 mol s^{-1} m^{-2} Pa^{-1}.

Topsoe, Inc. – EX1042
Page 45 of 71

(127, 128), Lin et al. (116, 117), Roy et al. (129), Abashar (141) and Hou et al. (142). In general, hybrid reactors based on Pd or Pd alloy membranes do show promise; but, much more research and development is needed before a realistic demonstration project is even warranted.

Both dense ceramic (perovskites) and mixed ceramic-metal (cermets) membranes are receiving increased attention for the selective separation of H_2 at high temperatures. Key accomplishments have been summarized in the work of Collot (9) and Siriwardane et al. (143). However, detailed structural performance information is lacking. There are several principal research groups investigating these materials including: the Argonne National Laboratory (ANL)/Natioanl Engineering Technology Laboratory (NETL) (Balachandran and Rothenberger) in a collaborative effort, Eltron Research Inc. (Roark and Sammels), Ceramatec Inc. (Elangovan), the University of Cincinnati (Lin), and the ITN Energy Systems Inc/INEEL/ANL/Nexant with Praxair as a consulting partner. Although there have been reports indicating that high H_2 fluxes have been achieved, more research and development is needed to address: thermal stability, controlled film thicknesses (>30 μm), ability to function under high pressures for extended periods of time, and to operate at temperatures below 800°C.

High temperature porous membranes (e.g., silica, silicalites, and zeolite) have also been investigated for application with SMR (144–146), CO_2 (dry) reforming (147–155) and WGS (156–158) processes. These materials have the advantage of lower price and higher permeance than Pd-based membranes. In general, microporous silicas show the highest H_2 selectivities (144–150,152,155,157,158), with the best H_2/N_2 selectivities exceeding 10,000 for membranes prepared by chemical vapor deposition (147–149). A literature survey is given in the work of Prabhu and Oyama (149) and is reproduced in Tables 15 and 16.

To date, the most promising results for a membrane separation with steam reforming were achieved with a silica-zirconia composite membrane prepared via sol-gel coating (144). This system exhibited H_2/CO_2 selectivities of >20 for fluxes >100 mol cm^{-2} s^{-1} Pa^{-1}. However, the presence of water vapor may significantly affect the performance of these silica membranes over time, particularly if operated at relatively low temperatures, such as in a WGS reactor. Silanol groups within the silica structure react with water leading to structural densification which reduces performance. Detailed information on the performance of these materials is provided in Tables 15 and 16. The potential for improvement of this material appears to be promising.

Hydrogen Permselective Polymeric Membranes

Hydrogen permselective polymeric membranes are widely used for H_2 recovery from refinery streams at low temperatures. As indicated earlier, polymeric membranes that are selective towards H_2 over heavier gases, like CO_2, can be used for hydrogen recovery in tail streams of PSA units.

Downloaded by [University of South Carolina] at 12:58 08 June 2016

Diffusion selectivity and solubility selectivity, along with permeance (the absolute magnitude of permeability), are the key factors governing performance of a polymeric membrane for H_2 separation (9, 159). Diffusion selectivity favors smaller molecules and solubility selectivity favors larger molecules.

In general, the selectivity of glassy polymers (i.e., polymers with glass transition temperatures above the operating temperature) is dominated by diffusion selectivity, which is governed primarily by the size difference between the gas molecules and the size sieving ability of the polymer material. Membranes made of glassy polymers are used for removing lighter gases like H_2. The selectivity of rubbery polymers (i.e., polymers with glass transition temperatures below the operating temperature) is dominated by solubility selectivity. These membranes are used for removing heavier gases from a mixture. Temperature affects these selectivities in different ways. For a given polymer, within its glassy or rubbery range, diffusion selectivity generally becomes more important as temperature increases, while the opposite is generally true for solubility selectivity, particularly for temperatures below room temperature. Freeman (159) have shown in a typical H_2/N_2 vs H_2 permeability plot why glassy polymers are preferred over rubbery membrane materials for most H_2 separation applications, where high selectivity is needed to meet permeate purity specifications. Important exceptions are the rubbery membranes (e.g., MTR VaporSep) that are used to recover H_2 from refinery streams. Here the high permeability of the rubbery polymer membrane is more important than H_2 purity in driving the system economics.

While selectivity is the key to purity, it is the membrane area that drives capital cost. Hydrogen is not very soluble in most glassy polymers, and permeance is governed by the diffusion rate. Since diffusion rates go up with temperature, higher temperatures (staying 15–20°C below the glass transition temperature) are usually favored for H_2 separations using glassy polymer membranes.

Information on polymeric membranes that selectively permeate H_2 over CO_2 is limited. Due to the high permeability of CO_2, the selectivity of H_2 in the presence of CO_2 is typically low for organic polymers. Orme et al. (160) have shown that for a wide range of polymers the H_2/CO_2 selectivities varied between 0.5–2.5. The H_2 permeabilities and selectivities for other polymeric membranes are shown in Tables 15 and 16. For these polymers the H_2/CO_2 selectivity varied between 2 and 15. Of particular interest are the results provided by Hradil et al. (161) with alumina supported styrene-divinylbenzene membranes. High permeabilities (i.e., 500–4000 Barrers) have been reported for H_2, but H_2/CO_2 selectivity data is lacking. Achieving high H_2 permeability with high H_2/CO_2 selectivity remains an important technical challenge. However, a polymer membrane that selectively permeates both H_2 and CO_2 relative to CO can still be used to drive the unfavorable equilibrium of the water gas shift reaction, though downstream scrubbing of the CO_2 may be required.

Downloaded by [University of South Carolina] at 12:58 08 June 2016

Carbon Dioxide Permselective Membranes

CO_2 is a highly permeable gas; generally, only H_2 and He are more permeable. In fact, at low temperatures, the solubility selectivity of CO_2/H_2 dominates the diffusivity advantages of H_2 and membranes have been developed with selectivity towards CO_2. Rubbery type membranes are preferred for CO_2/H_2 separation. Orme et al., (2001) have reported that rubbery polyphazenes (Tg $<<$ 0°C) show interestingly high CO_2/H_2 selectivities of $\sim$10 with modest CO_2 permeabilities of $\sim$250 Barrers. In recent years, the group directed by Spontak (162–164) has shown similar CO_2/H_2 selectivities, i.e., 6–10, using crosslinked poly(ethylene glycol) (PEG) membranes, but with reduced CO_2 permeabilities of 40–70 barrers. Further research and development is needed in this area.

There are a few glassy polymer membranes that show large selectivities toward heavier gases. The groups directed by Freeman (165) and Pinnau (166–168) have been working with these glassy polymers with high molecular free volume to separate light hydrocarbons (C^{3+}) from light (or permanent) gases. These polymers, which consist of substituted polyacetylenes (e.g., Poly(1-trimethylsilyl-1-propyne), PTMSP; Poly(1-methyl-1-pentyne), PMP; Poly(tert-butylacetylene), PTBA) have shown high permeabilities and favorable selectivities for CO_2 over H_2. Initial permeabilities in these membranes decrease with time (166). Kuraoka et al. (169) have shown that glassy organosilanes with long organic pendant groups (i.e., C_{18}) and very small porosity ($\sim$1.7%) can also be very selective towards CO_2 (CO_2/He $\sim$5 at 300 K). Table 16 displays some of the results obtained for these types of membranes. This is an area where the fundamental science suggests a breakthrough may be possible.

Selective surface flow (SSF) adsorbent membranes function as a result of the affinity that CO_2 has over H_2 in adsorbing to the membrane surface. An example of such a membrane is a high surface area carbonaceous material where the pores are uniform and in the upper end of the molecular sieving size range. In this way, the heavier gas (e.g., CO_2) readily adsorbs over the light gas (e.g., H_2) on the wall of the pore, which decreases the effective diameter of the pore and excludes the light gas from entering the pore. The heavy component then simply diffuses along the surface of the walls down a concentration gradient through the SSF adsorbent membrane material. However, the selectivity is not very high for these systems (Table 16).

The first SSF membranes were developed by Air Products and Chemicals Inc. They consisted of a carbonized resin supported on a porous alumina or a metal tube (10, 55, 170, 171). Recently, Way and coworkers (172, 173) have reported on new types of SSF membranes made of modified porous Vycor glass. The selectivities of these membranes are provided in Table 16. Though invented by industrial researchers, industrial interest in SSF membranes appears to have waned. A commercial scale demonstration may

Downloaded by [University of South Carolina] at 12:58 08 June 2016

help move this separation technology forward; none have been announced, however.

CO_2 selective membranes have been prepared from promoted HTlc and modified zirconates. Here CO_2 is selectively complexed with the membrane material at high temperatures. The concept of these solubility-based separations has been suggested in the literature (9, 174); however, much more research and development is needed to demonstrate both feasibility and economic reliability.

Downloaded by [University of South Carolina] at 12:58 08 June 2016

RECOMMENDATIONS FOR FUTURE RESEARCH AND DEVELOPMENT

The literature survey above identified several areas where major improvements or even breakthroughs may be achieved in hydrogen production with the judicious use of adsorption and membrane processes. In several other areas, fundamental limits seem to place big hurdles in the path forward. Recommendations are given below for support of future research and development in the more promising areas to reduce energy consumption, environmental impact, and feedstock requirements, all while improving process economics.

Four areas were identified that need more research and development on separations technology for equilibrium driven processes. These are Adsorbent Development, Membrane Development, Adsorption Process Development, and H_2 Flow Sheet Augmentation with Adsorption and Membrane Processes. Existing flow sheets and conceptual flow sheets to foster ideas for near and longer term H_2 production plant modifications with adsorption and membrane technologies are provided in Figs. 1 to 3 for guidance.

Flow Sheets for Guidance

Figures 1a, 1b, and 1c display flow sheets depicting the current state-of-the-art for industrial H_2 production technology. In these figures, the operating conditions associated with each unit operation are provided. The three major separation processes are identified: condensation for water removal; CO_2 scrubbing with MEA or MDEA; and PSA for CO_2, CO, and CH_4 removal. Hydrogen selective polymeric membranes are just beginning to find industrial applications in hydrogen production, as indicated.

Hypothetical hydrogen and syngas production plant flow sheets, indicating where adsorption and or membrane processes might be able to augment existing plants in the near term, are shown in Figs. 2a and 2b, respectively. For the longer term, hypothetical hydrogen production plant flow sheets of the reformer, water gas shift and purification sections, indicating where

adsorption and or membrane processes might be able to completely revamp existing plants, are shown in Figs. 3a, 3b and 3c, respectively. Similarly, hypothetical longer term syngas production plant flow sheets are shown in Fig. 3d.

Adsorbent Development

One overarching goal was identified for adsorbent development: to develop high capacity adsorbents for CO_2 and CO with rapid adsorption-desorption

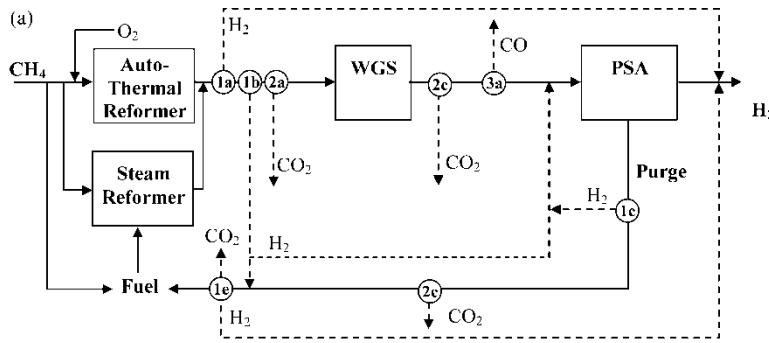

Figure 2. (a) Hypothetical near term hydrogen production plant flow sheets, indicating where adsorption and or membrane processes might be able to augment existing plants in the near term. Tag Indicators: 1a: dense (highly selective) high T membranes: Pd, ion (proton) and electron conductive perovskites (ceramic and cermets); 1b: porous high T membranes: hydrogen selective inorganic membranes (silica molecular sieves, silicalite zeolites); 1c: porous low T membranes: hydrogen selective organic and inorganic membranes; 1d: metal hydrides for high T hydrogen concentration via PSA or TSA; 1e: PSA for hydrogen purification or CO_2 concentration; 2a: high T CO_2 adsorption (hydrotalcites, CaO); 2b: high T CO_2 selective membranes (hydrotalcites); 2c: low T CO_2 selective membranes (surface flow membranes, organic membranes); 3a: low T PSA for CO concentration (π-complexation adsorbents); 4a: high T oxygen dense membranes (ion and electron conductive perovskites). (b) Hypothetical near term syngas production plant flow sheet, indicating where adsorption and or membrane processes might be able to augment existing plants in the near term. Tag Indicators: 1a: dense (highly selective) high T membranes: Pd, ion (proton) and electron conductive perovskites (ceramic and cermets); 1b: porous high T membranes: hydrogen selective inorganic membranes (silica molecular sieves, silicalite zeolites); 1c: porous low T membranes: hydrogen selective organic and inorganic membranes; 1d: metal hydrides for high T hydrogen concentration via PSA or TSA; 1e: PSA for hydrogen purification or CO_2 concentration; 2a: high T CO_2 adsorption (hydrotalcites, CaO); 2b: high T CO_2 selective membranes (hydrotalcites); 2c: low T CO_2 selective membranes (surface flow membranes, organic membranes); 3a: low T PSA for CO concentration (π-complexation adsorbents); 4a: high T oxygen dense membranes (ion and electron conductive perovskites).

(*continued*)

Downloaded by [University of South Carolina] at 12:58 08 June 2016

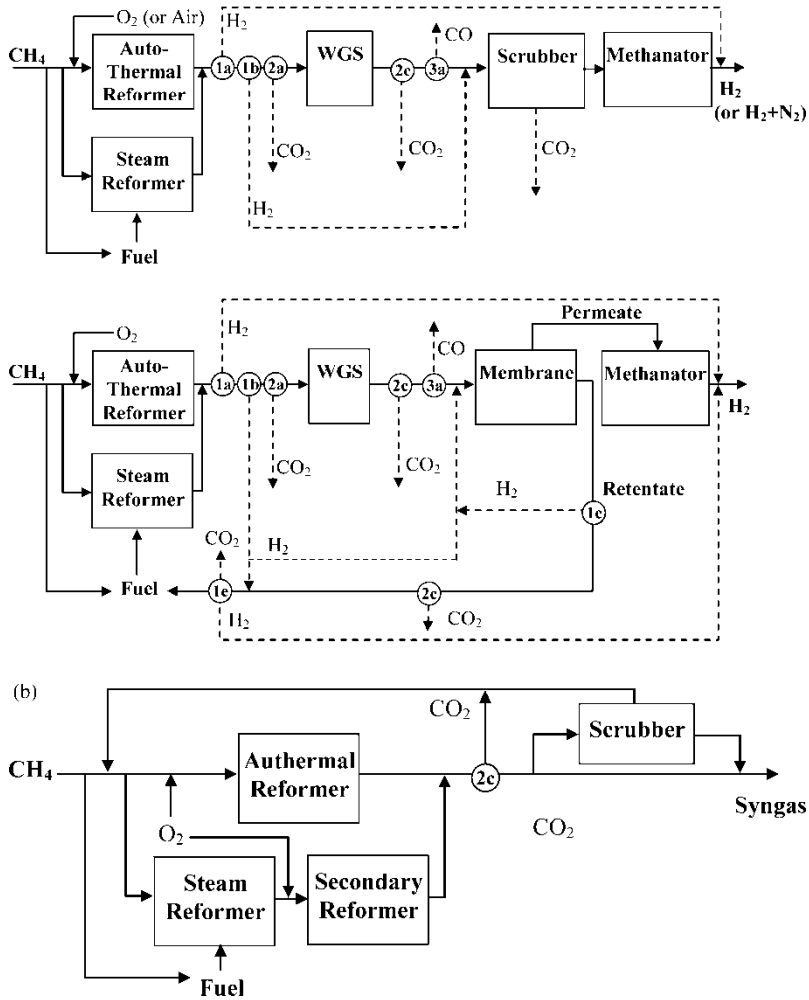

Figure 2. Continued.

Downloaded by [University of South Carolina] at 12:58 08 June 2016

kinetics, improved selectivity, and operational stability at elevated temperature in the presence of steam and other components and contaminants. As a guide, the classes of materials being studied today include: ambient temperature activated carbons, carbon molecular sieves, and zeolites for CO_2; high temperature hydrotalcites, CaOs and zirconates for CO_2; ambient temperature silica gels, activated aluminas and zeolites for H_2O; ambient temperature Cu and Ag impregnated alumina and silica for CO; metal hydrides and their alloys for H_2; and structured adsorbents for rapid PSA, or PSA/TSA processes, e.g., carbon fiber molecular sieves. Also, as a guide and for reference, typical

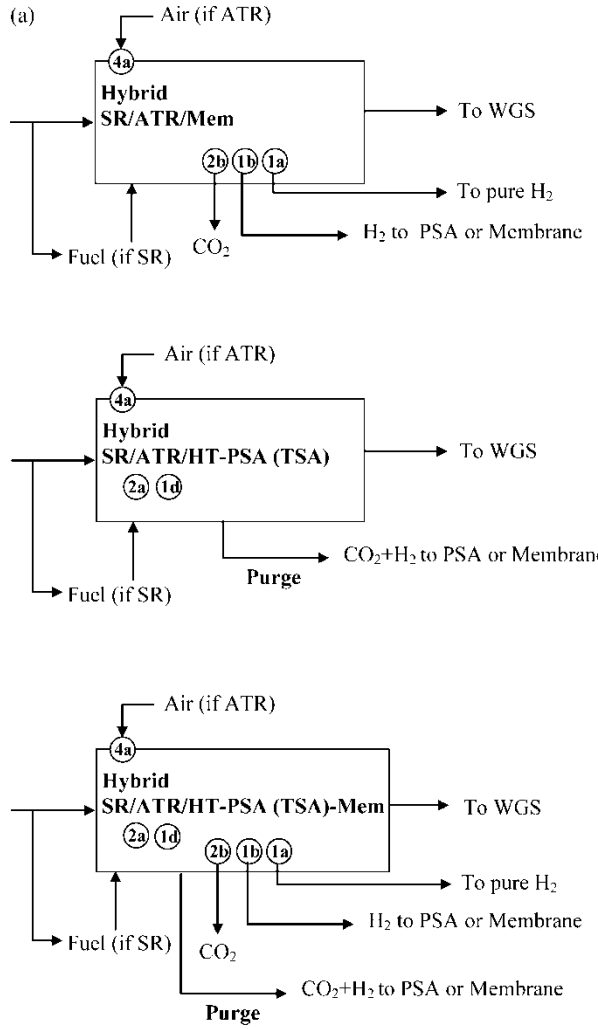

Figure 3(a). Hypothetical longer term hydrogen production plant flow sheets of the reformer section, indicating where adsorption and or membrane processes might be able to augment existing plants in the longer term. Tag Indicators: 1a: dense (highly selective) high T membranes: Pd, ion (proton) and electron conductive perovskites (ceramic and cermets); 1b: porous high T membranes: hydrogen selective inorganic membranes (silica molecular sieves, silicalite zeolites); 1c: porous low T membranes: hydrogen selective organic and inorganic membranes; 1d: metal hydrides for high T hydrogen concentration via PSA or TSA; 1e: PSA for hydrogen purification or CO_2 concentration; 2a: high T CO_2 adsorption (hydrotalcites, CaO); 2b: high T CO_2 selective membranes (hydrotalcites); 2c: low T CO_2 selective membranes (surface flow membranes, organic membranes); 3a: low T PSA for CO concentration (π-complexation adsorbents); 4a: high T oxygen dense membranes (ion and electron conductive perovskites).

Downloaded by [University of South Carolina] at 12:58 08 June 2016

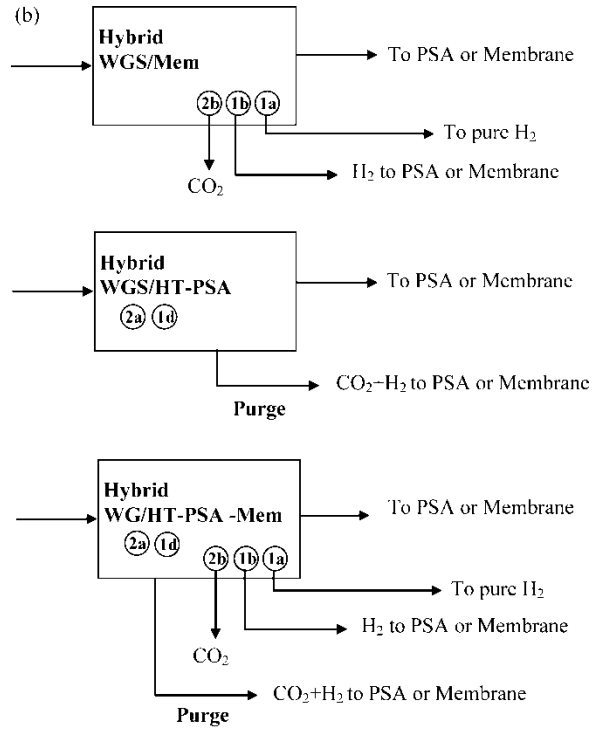

Figure 3(b). Hypothetical longer term hydrogen production plant flow sheets of the water gas shift section, indicating where adsorption and or membrane processes might be able to augment existing plants in the longer term. Tag Indicators: 1a: dense (highly selective) high T membranes: Pd, ion (proton) and electron conductive perovskites (ceramic and cermets); 1b: porous high T membranes: hydrogen selective inorganic membranes (silica molecular sieves, silicalite zeolites); 1c: porous low T membranes: hydrogen selective organic and inorganic membranes; 1d: metal hydrides for high T hydrogen concentration via PSA or TSA; 1e: PSA for hydrogen purification or CO_2 concentration; 2a: high T CO_2 adsorption (hydrotalcites, CaO); 2b: high T CO_2 selective membranes (hydrotalcites); 2c: low T CO_2 selective membranes (surface flow membranes, organic membranes); 3a: low T PSA for CO concentration (π-complexation adsorbents); 4a: high T oxygen dense membranes (ion and electron conductive perovskites).

process conditions and flow rates encountered in a H_2 production plant are provided in Fig. 1 and Tables 1 to 4, respectively. Table 5 provides some insight into the CO_2 and CO adsorbent capacities now being achieved.

In general, these materials have a potential for new or expanded use in commercial H_2 production technologies. However, they tend to suffer from one or more of the following deficiencies: too expensive; insufficient working capacity; insufficient selectivity; slow adsorption or desorption mass transfer kinetics; moisture sensitivity; vulnerability to poisons like CO or S; too rectangular of an adsorption isotherm shape making regeneration difficult with

Downloaded by [University of South Carolina] at 12:58 08 June 2016

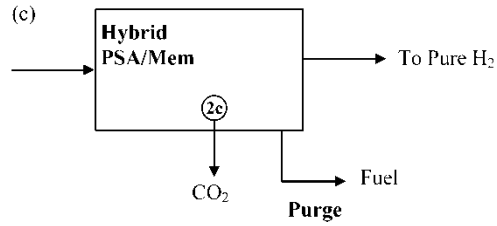

Figure 3(c). Hypothetical longer term hydrogen production plant flow sheets of the purification section, indicating where adsorption and or membrane processes might be able to augment existing plants in the longer term. Tag Indicators: 1a: dense (highly selective) high T membranes: Pd, ion (proton) and electron conductive perovskites (ceramic and cermets); 1b: porous high T membranes: hydrogen selective inorganic membranes (silica molecular sieves, silicalite zeolites); 1c: porous low T membranes: hydrogen selective organic and inorganic membranes; 1d: metal hydrides for high T hydrogen concentration via PSA or TSA; 1e: PSA for hydrogen purification or CO_2 concentration; 2a: high T CO_2 adsorption (hydrotalcites, CaO); 2b: high T CO_2 selective membranes (hydrotalcites); 2c: low T CO_2 selective membranes (surface flow membranes, organic membranes); 3a: low T PSA for CO concentration (π-complexation adsorbents); 4a: high T oxygen dense membranes (ion and electron conductive perovskites).

Downloaded by [University of South Carolina] at 12:58 08 June 2016

pressure; too strong of a physiochemical interaction requiring regeneration with relatively high temperature instead of pressure; and limited rapid cycling capability because commercial pellet materials tend to crumble if the cycling is too fast. Overall, the following recommendations are made.

High capacity CO_2 selective adsorbents need to be developed that can operate in the presence of hydrogen, steam, and other contaminants like sulfur at elevated temperatures. CO_2 working capacities in the range of 3–4 mol/kg, which are similar to those of commercial ambient temperature adsorbents like 5A zeolite, are desirable at elevated temperatures. Any improvement in the working capacity and operational stability of CO selective adsorbents is desirable at ambient or elevated temperatures. Additional research and development on H_2O and H_2 selective adsorbents is not recommended, as existing materials are adequate and commercially available.

Membrane Development

One overarching goal was identified for near term membrane development: to develop high temperature membranes selective only to O_2, CO_2, or H_2 that exhibit high permeability, resistance to fouling and degradation, good mechanical stability under high differential pressures, offer increased energy savings, lower capital and operating costs, afford higher reliability,

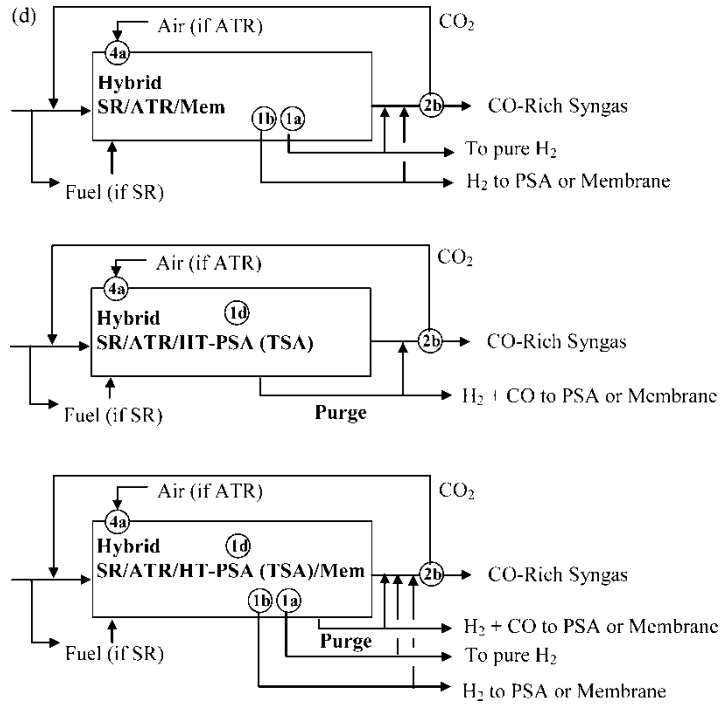

Figure 3(d). Hypothetical longer term syngas production plant flow sheets, indicating where adsorption and or membrane processes might be able to augment existing plants in the longer term. Tag Indicators: 1a: dense (highly selective) high T membranes: Pd, ion (proton) and electron conductive perovskites (ceramic and cermets); 1b: porous high T membranes: hydrogen selective inorganic membranes (silica molecular sieves, silicalite zeolites); 1c: porous low T membranes: hydrogen selective organic and inorganic membranes; 1d: metal hydrides for high T hydrogen concentration via PSA or TSA; 1e: PSA for hydrogen purification or CO_2 concentration; 2a: high T CO_2 adsorption (hydrotalcites, CaO); 2b: high T CO_2 selective membranes (hydrotalcites); 2c: low T CO_2 selective membranes (surface flow membranes, organic membranes); 3a: low T PSA for CO concentration (π-complexation adsorbents); 4a: high T oxygen dense membranes (ion and electron conductive perovskites).

and reduce footprint and environmental impact. In general, cheaper, faster, better membrane materials are always being sought that resist fouling and cracking, and can withstand high temperatures and pressures; this is not new news. As a guide and reference, the typical process conditions and flow rates encountered in a H_2 production plant are provided in Fig. 1 and Tables 1 to 4, respectively. Tables 15 and 16 provide some insight into the performance numbers now being achieved with O_2, H_2, and CO_2 selective membranes.

Downloaded by [University of South Carolina] at 12:58 08 June 2016

Downloaded by [University of South Carolina] at 12:58 08 June 2016

In general, many different membrane materials show commercial potential for H_2 production. However, they generally suffer from one or more of the following deficiencies: too expensive, especially with respect to fabrication costs; insufficient flux; low selectivity depending on the membrane material and application (see Tables 15 and 16); not stable under the conditions of H_2 and syngas production, e.g., 200°C; not stable when exposed to water, sulfur, or other contaminants; lack high quality support material with uniform pore size and appropriate surface roughness; inadequate sealing and joining technology; and inadequate long term testing under industrial conditions. The following recommendations are made for O_2, H_2, and CO_2 permselective membrane materials.

An improved O_2 permselective membrane is needed that could be based on membrane materials that have oxygen defects and used today with ATR and POX technology. It needs to function at lower temperatures with a higher permeance, e.g., $>100\ 10^{-8}$ mole/s/m^2/Pa. Also, current oxygen permselective membranes of the perovskite type operate at too high of a temperature (>800°C).

An improved H_2 permselective membrane is needed that could be based on atomic transport/dense metallic membrane materials. Examples of such membrane materials include Pd alloys and Pd coated metals. They need to operate with a higher flux at lower pressure without hydrogen embrittlement, and they need to be resistant to sulfur poisoning. Improved synthesis and plating methods are needed to produce membranes with thicknesses $<1-3$ μm. Pd–Cu alloys and other new alloys might assist in this endeavor by addressing issues of hillock formation (membrane defects formed during operation).

An improved H_2 permselective membrane is needed that could be based on polymeric membrane materials. Examples of such membrane materials include polyimide and polysulphone. Currently, polyimides and polysulphones function well at 200°C. But, membranes are needed that can operate at 400°C. Clearly, high temperature polymeric materials need to be explored that might be selective to H_2 over other gases such as CO_2 and CO.

An improved H_2 permselective membrane is needed that could be based on ion transport membrane materials. Examples of such membrane materials include perovskites. New ceramic materials and processing methods are needed. Improved flux, selectivity, and stability-robustness to water and ammonia are also needed.

An improved H_2 permselective membrane is needed that could be based on molecular or Knudsen transport through microporous membrane materials. Examples of such membrane materials include zirconia, alumina, classical zeolites, ZSM-5, Ti-Si zeolites, carbon zeolites, porous SiC, and carbon molecular sieves. This type of membrane material needs a selectivity of >100 with higher flux and they must be stable to water vapor and common petroleum contaminants. They need improved synthesis routes, with

desirable micropores <1 nm, but preferably <0.5 nm. They need improvements in the uniformity and consistency of the membrane material.

An improved O_2, H_2 or CO_2 (possibly even CO) permselective membrane is needed that could be based on the mixed matrix membrane concept, which combines positive attributes from organic and inorganic membrane materials. Mixed matrix membranes are easy to make, offer a wide variety of separation characteristics, and hence could play a significant role in H_2 production technology. These kinds of membrane materials should be especially useful for high temperature membrane reactor technology. However, very little research has been done on O_2 and H_2 selective mixed matrix membranes; most of the research has been done of CO_2 selective mixed matrix membranes. Hence, the limits on the applicability of mixed matrix membranes have not been well defined.

Examples of such mixed matrix membrane materials include carbon molecular sieves and zeolites in polyimide and polysulphone membranes. Desirable properties include compatible mixed-matrix materials that resist segregation; high mechanical strength adaptable to manufacturing processes; inertness to chemical attack and plasticization for use in membrane reactor technology; high H_2 flux and high H_2/CO_2 and H_2/CO selectivities at high temperature; high CO_2 flux and CO_2/H_2 selectivity at high temperatures; high O_2 flux and O_2/N_2 selectivity at high temperatures; and high H_2O flux and high H_2O/H_2 and H_2O/CO_2 selectivities at high temperatures.

An improved CO_2 permselective polymeric membrane is needed with high CO_2 up take and high CO_2 flux so H_2 is retained on the high pressure side. A variety of CO_2 permselective membrane materials have been explored. These include rubbery to glassy polymeric materials that have a trade off between being solubility CO_2 selectivity and diffusivity CO_2 selectivity depending on their glass transition and operating temperatures. Even CO_2 selective surface flow membranes have been developed, which have surprisingly received relatively little attention in the literature. However, none of these CO_2 permselective membranes have been commercialized; hence, improvements in CO_2 flux, selectivity and durability are all needed.

A CO_2 permselective polymeric membrane needs at least a two times higher CO_2 flux than current commercial membranes. These positive attributes might be achieved by developing innovative ways to incorporate agents in the membrane that complex with CO_2. New approaches are also needed that foster a CO_2/H_2 selectivity of $>15-20$. This kind of membrane also needs better stability to syngas production conditions of 200°C or higher. The development of a CO_2 permselective inorganic membrane with a CO_2/H_2 selectivity of $>15-20$ might provide the desirable temperature stability. The further development of promoted HTlc, modified zirconate or other inorganic membrane materials could resolve some of the issues with the current CO_2 permselective polymeric membranes and improve on the current CO_2 permselective inorganic

Downloaded by [University of South Carolina] at 12:58 08 June 2016

membranes. Clearly, mixed matrix membranes may play a significant role in the development of a viable CO_2 permselective membrane.

Adsorption Process Development

One overarching goal was identified for adsorption process development: to develop new or modify existing adsorption process technology that offers increased energy savings, lower capital and operating costs, affords higher reliability, and reduces footprint and environmental impact. State-of-the-art adsorption processes, which are almost exclusively based on PSA, suffer from the following: too expensive; insufficient recovery; insufficient selectivity; the feed pressures tend to be very high (see Fig. 1); the beds tend to be very large; and the operation tends to be very complex because of the relative high number of beds. The following recommendations are made.

New or improved PSA cycle designs are needed that operate at either ambient or elevated temperatures. It would be great if these new cycle designs could take advantage of commercially available adsorbents. However, these new PSA cycle designs could also be centered on the new adsorbents discussed above that are currently under development or that have yet to be developed.

Some additional ideas for improvement include: rethinking the use of the PSA tail gas; revamping the existing PSA plant through cycle modification or relaxing the H_2 purity constraint; using lower or even higher purge gas pressure; replacing one or more of the adsorbents with a more efficient one; increasing or even decreasing the number of adsorbent vessels; and adding storage tanks to replace some of the adsorbent beds.

An improved way of operating a conventional H_2, CO, or CO_2 selective PSA unit with increased energy efficiency is needed. Some ideas include: developing new PSA cycles that take advantage of the heavy reflux concept, where a pure heavy product (like CO_2) is more desirable than pure light product (like H_2); taking advantage of the fact that a H_2 selective metal hydride adsorbent makes the H_2 the heavy component; and fostering a clear understanding of the design of the heavy reflux concept in PSA cycle design, which appears to be lacking compared to the vastly commercial light reflux PSA cycle design.

It is also envisioned that TSA or PSA/TSA hybrid cycle designs could also play a role in H_2 production technology. This could be especially true with respect to CO_2 removal or sequestration. It might even be possible to carry out a sorption enhanced reaction process (SERP) with a thermal swing regeneration mode. Improved efficiency for thermal management in the design of H_2 TSA and PSA/TSA hybrid cycles is needed. Some ideas include: rethinking bed designs for rapid heating and cooling because the long cycle times required to heat and cool the conventional TSA beds give rise to exceedingly large columns; and taking advantage of the many heat

Downloaded by [University of South Carolina] at 12:58 08 June 2016

sources that are available throughout a H_2 production plant that may lend themselves to a TSA or a PSA/TSA hybrid cycle configuration for selective CO_2 or CO removal from a process stream. Figure 2 includes PSA, TSA, and other adsorption cycles that could be used for hydrogen separation.

It is envisioned that the continued development of structured adsorbent materials for use in rapid cycle PSA, along with the further development of rapid cycle PSA, should both play key roles in H_2 production technology. The good news is that any improvements in conventional PSA cycles are applicable to the rapid cycle PSA concept. However, there might be a limit as to how fast the cycle time can be in rapid PSA. This limit depends on how small the adsorbent particles can be made in the structured adsorbent material to push this limit to faster and faster cycles. It might also be possible to design a SERP in a rapid PSA configuration. Maybe the walls of such a system could be a permeable membrane, thereby combining two separation processes and a reaction into one hybrid separator/reactor.

Although research on CO selective adsorbents has waned over the years, it is envisioned that more selective CO adsorbents and associated PSA, TSA, or hybrid PSA/TSA processes are still worth developing. These adsorbents could also be used in the further development of SERPs. The same could be said about H_2 selective adsorbents. This might be especially true with respect to CO production. It might even be possible to use a high temperature reversible metal hydride as a H_2 selective adsorbent in a SERP in a PSA, TSA, or hybrid PSA/TSA mode.

H_2 Flow Sheet Augmentation with Adsorption and Membrane Processes

One overarching goal was identified for longer term H_2 flow sheet augmentation with adsorption and membrane processes: to develop new hydrogen adsorption and membrane process technology where all reactors are also separators and that offers lower capital and operating costs and affords higher reliability and up-time with improved energy savings. Driving equilibrium processes in this way can greatly improve manufacturing process efficiencies. This integrated design concept would not only favorably shift the equilibrium of the reforming reaction, but it would also facilitate the WGS reaction.

This lofty and longer term goal could only be achieved through the development of new adsorbent and membrane separation materials. Although it appears that highly selective and highly permeable membranes will always be very difficult to fabricate, the criteria for selectivity or permeability might be relaxed with hybrid multi-reactive, multi-separation designs. In this way, a less selective membrane with a high flux could suffice.

The information provided in Fig. 3 could serve as a basis for modification. The following recommendation is made. Hybrid reactor/separator technology for H_2 production needs to be developed that incorporates adsorbents and or

Downloaded by [University of South Carolina] at 12:58 08 June 2016

membranes. The sorption enhanced reaction process (SERP) serves as an excellent example of this kind of hybrid technology that could be commercialized today with the right combination of performance and economics. However, the recommendation here is to advance the SERP concept even further. For example, it would be desirable to develop a multi-functional hybrid reactor for steam methane reforming (SMR) by combining the reactor with a CO_2 selective adsorbent and an H_2 permeable membrane. It is noteworthy that life forms exhibit remarkable membrane selectivity; hence, there is plenty that could be learned from the study of bimimetic membrane materials for H_2 production. It also might be desirable to incorporate the shift catalyst into the membrane unit, making it a bi-functional material. Or, with the right O_2 permselective material, the reactor wall of a POX or ATR unit becomes the separator that allows the use of ambient as the pure oxygen source. Clearly, the possibilities for hybrid reactor/separators are endless in this regard.

Downloaded by [University of South Carolina] at 12:58 08 June 2016

ACKNOWLEDGEMENTS

This study was carried out under a subcontract with the Oak Ridge National Laboratory (managed by UT-Battelle, LLC for the Department of Energy under contract DE-AC05-00OR22725) and sponsored by the U.S. Department of Energy's Office of Energy Efficiency and Renewable Energy, Industrial Technologies Program. The programmatic support of Dickson Ozokwelu, the Chemicals Industry of the Future team lead, who funded this effort, is greatly appreciated.

The authors would also like to thank members of the Chemical Industry Vision2020 Technology Partnership committee who contributed to this study: Francis Via of Fairfield Resources; Sharon Robinson of Oak Ridge National Laboratory; Charles Scouten of The Fusfeld Group; Stephen Pietsch of BP; Robert Goldsmith and Michael Bradford of CeraMem; Santi Kulprathipanja of UOP; Dilip Kalthod of Air Products and Chemicals; Bhaskar Arumugam and Timothy R. Dawsey of Eastman Chemical; Hans Wijmans of Membranes Technology & Research; Krish R. Krishnamurthy and Stevan Jovanovic of BOC; Dante Bonaquist, Darius Remesat, and Neil Stephenson of Praxair; Brendan Murray of Shell; John Gordon and Balki Nair of Ceramatec; Philip Rolchigo of GE; and C. J. Guo of Air Liquide.

REFERENCES

1. Ramage, M.P. et al. (2005) *The Hydrogen Economy: Opportunities, Costs, Barriers and R&D Needs*; The National Academy Press: Washington, DC.
2. Kirk and Othmer (1999) *Concise Encyclopedia of Chemical Technology*, 4th ed.; John Wiley & Sons.

3. Editorial Staff (2002) Gas Processing 2002. *Hydrocarbon Processing*.
4. Editorial Staff (2003) Petrochemical Processes 2003. *Hydrocarbon Processing*.
5. Meyers, R.A. (2004) *Handbook of Petroleum Refining Processes*, 3rd ed.; McGraw-Hill: NY.
6. Wittcoff, H.A., Reuben, B.G., and Plotkin, J.S. (2004) *Industrial Organic Chemicals*, 2nd ed.; John Wiley & Sons, Inc.: New Jersey.
7. Table supplied by F. Zia (2005).
8. Humphrey, J.L. and Keller II, G.E. (1997) *Separation Process Technology*. McGraw-Hill: NY.
9. Collot, A.-G. (2003) Prospects for hydrogen from coal; *IEA Clean Coal Center*.
10. Sircar, S., Waldron, W.E., Roa, M.B., and Anand, M. (1995) Hydrogen production by hybrid SMR-PSA-SSF membrane system. *Sep. Pur. Tech.*, 17: 11–20.
11. Hufton, J.R., Sircar, S., Baade, W.F., Abrardo, J.M., and Anand, M. (2001) Integrated steam methane reforming process for producing carbon monoxide and hydrogen. US Patent 6, 312, 658 B1.
12. Stocker, J., Whysall, M., and Miller, G.Q. (1998) 30 years of PSA technology for hydrogen purification UOP website.
13. Larson, J., Michel, M., Zschommler, J., Whysall, M., and Vanheertum, S. (2003) Large scale hydrogen production plants, Uhde and UOP's experience, presented at the AIChE 2003 Spring meeting, UOP website.
14. Henderson, M. and Gandhi, M. (2001) Consider cryogenic methods to improve ammonia production. *Hydrocarbon Processing*, 97–102.
15. Fuderer, A. and Rudelstorfer, E. (1976) Selective adsorption process. USP 3,986,849.
16. Whysall, M. and Wagemans, L.J.M. (2001) Very large-scale pressure swing adsorption processes. USP 6,210,466 B1.
17. Baksh, M.S.A. and Terbot, C.E. (2003) Pressure-swing adsorption process for the production of hydrogen. US 6,503,299 B2.
18. Baksh, M.S.A., Ackley, M.W., and Notaro, F. (2004) Process and apparatus for hydrogen purification. WO 2004/058630 A2.
19. Baksh, M.S.A. and Ackley, M.W. (2002) Pressure-swing adsorption process for the production of hydrogen. USP 6,340,382 B1.
20. Xu, J. and Weist, E.L., Jr. (2002) Six bed pressure swing adsorption process with four steps of pressure equalization. USP 6,454,838 B1.
21. Xu, J., Rarig, D.L., Cook, T.A., Hsu, K.-K, Schoonover, M., and Agrawal, R. (2003) Pressure swing adsorption process with reduced pressure equalization time. USP 2003/0015091 A1.
22. Chen, Y., Kapoor, A., and Ramachandran, R. (1999) Two stage pressure-swing adsorption process. USP 5,993,517.
23. Chen, Y., Kapoor, A., and Ramprasad, N. (2000) Two phase pressure-swing adsorption process. USP 6,045,603.
24. Kapoor, A., Chen, Y., Davies, S.P., Kumar, R., and Thorogood, R.M. (1999) Production of carbon monoxide from syngas. USP 5,980,857.
25. Sircar, S. and Golden, T.C. (2000) Purification of hydrogen by pressure swing adsorption. *Separation Science and Technology*, 35: 667–687.
26. Keefer, B.G. (2001) High-frequency rotary pressure swing adsorption. USP 6,176,897 B1.
27. Keefer, B.G. and Doman, D.G. (2000) Flow regulated pressure swing adsorption system. USP 6,063,191.
28. Keefer, B.G. and Doman, D.G. (2004) Flow regulated pressure swing adsorption system. USP RE38,493E.

Downloaded by [University of South Carolina] at 12:58 08 June 2016

29. Golden, C.M.A., Golden, T.C., and Battavio, O.J. (2003) Multilayered adsorbent system for gas separations by pressure swing adsorption. USP 2003/0205131 A1.
30. Golden, T.C., Golden, C.M.A., and Zwilling, D.P. (2003) Self-supported structured adsorbent for gas separation. USP 6,656,627 B1.
31. Golden, T.C. and Weist, E.L. (2003) Activated carbon as sole absorpent in rapid cycle hydrogen PSAs.
32. Keefer, B.G., Carel, A., Sellars, B., Shaw, I., and Larisch, B. (2004) Adsorbent laminate structures. USP 6,692,626 B2.
33. Connor, D.J., Doman, D.G., Jeziorowski, L., Keefer, B.G., Larisch, B., Mclean, C.R., and Shaw, I. (2002) Rotary pressure swing adsorption apparatus. USP 6,406,523 B1.
34. Zhou, L., Lue, C.-Z., Bian, S.-J., and Zhou, Y.-P. (2002) Pure hydrogen from the dry gas of refineries via a novel pressure swing adsorption process. *Industrial & Engineering Chemistry Research*, 41: 5290–5297.
35. Jiang, L., Fox, V.G., and Biegler, L.T. (2004) Simulation and optimal design of multiple-bed pressure swing adsorption systems. *AIChE Journal*, 50: 2904–2917.
36. Warmuzinski, K. and Tanczyk, M. (1997) Multicomponent pressure swing adsorption. Part I. Modeling of large-scale PSA installations. *Chemical Engineering and Processing*, 36: 89–99.
37. Tanczyk, M. and Warmuzinski, K. (1998) Multicomponent pressure swing adsorption. Part II. Experimental verification of the model. *Chemical Engineering and Processing*, 37: 301–315.
38. Yang, J., Ahn, H., Lee, H., and Lee, C.-H. (1998) Hydrogen recovery from coke oven gas using a layered-column PSA process, In *Fundamentals of Adsorption*; 6th, Conference on Fundamentals of Adsorption, Griens, Fr., May 24–28.
39. Ahn, H., Yang, J., and Lee, C.-H. (2001) Effects of feed composition of coke oven gas on a layered bed H_2 PSA process. *Adsorption*, 7: 339–356.
40. Lee, C.-H., Yang, J., and Ahn, H. (1999) Effects of carbon-to-zeolite ratio on layered bed H2 PSA for coke oven gas. *AIChE Journal*, 45: 535–545.
41. Ahn, H., Lee, C.-H., Seo, B., Yang, J., and Baek, K. (1999) Backfill cycle of a layered bed H_2 PSA process. *Adsorption*, 5: 419–433.
42. Waldron, W.E. and Sircar, S. (2000) Parametric study of a pressure swing adsorption process. *Adsorption*, 6: 179–188.
43. Vaporciyan, G.G. and Kadlec, H.R. (1987) Equilibrium–limited periodic separating reactors. *AIChE Journal*, 33: 1334–1343.
44. Vaporciyan, G.G. and Kadlec, H.R. (1989) Periodic separating reactors: experiments and theory. *AIChE Journal*, 35: 831–844.
45. Kadlec, H.R. and Vaporciyan, G.G. (1993) Periodic chemical processing system. USP 5,254,368.
46. Sircar, S., Hufton, J.R., and Nataraj, S. (2000) Process and apparatus for the production of hydrogen by steam reforming of hydrocarbon. USP 6,103,143.
47. Hufton, J.R., Sircar, S., Baade, W.F., Abrardo, J.M., and Anand, M. (2001) Integrated steam methane reforming process for producing carbon monoxide. USP 6,328,945 B1.
48. Hufton, J.R. and Nataraj, S. (2003) Production of carbon monoxide. USP 6,592,836 B2.
49. Anand, M., Sircar, S., and Carvill, B.T. (2001) Process for operating equilibrium controlled reactions. USP 6,303,092 B1.

Downloaded by [University of South Carolina] at 12:58 08 June 2016

50. Nataraj, S., Carvill, B.T., Hufton, J.R., Mayorga, S.G., Gaffney, T.R., and Brzozowski, J.R. (2001) Process for operating equilibrium controlled reactions. USP 6,315,973 B1.
51. Carvill, B.T., Hufton, J.R., Anand, M., and Sircar, S. (1996) Sorption-enhanced reaction process. *Aiche Journal*, 42: 2765–2772.
52. Hufton, J.R., Mayorga, S., and Sircar, S. (1999) Sorption-enhanced reaction process for hydrogen production. *AIChE Journal*, 45: 248–256.
53. Waldron, W.E., Hufton, J.R., and Sircar, S. (2001) Production of hydrogen by cyclic sorption enhanced reaction process. *AIChE Journal*, 47: 1477–1479.
54. Ying, D.H.S., Nataraj, S., Hufton, J.R., Xu, J., Allam, R.J., and Dulley, S.J. (2004) Simultaneous shift-reactive and adsorptive process at moderate temperature to produce pure hydrogen. USP 2004/0081614 A1.
55. Saitou, T. and Sugiyama, K. (1995) Hydrogen purification with metal hydride sintered pellets using pressure swing adsorption method. *Journal of Alloys and Compounds*, 231: 865–870.
56. Suda, S., Iwata, K., Sun, Y.M., Komazaki, Y., and Liu, F.J. (1997) A pressure-temperature swing process for the methanation of carbon oxides using fluorinated hydriding alloys. *Journal of Alloys and Compounds*, 253–254: 668–672.
57. Daniel, K.D. and Ritter, J.A. (2002) Equilibrium theory analysis of a pressure swing adsorption cycle utilizing an unfavorable Langmuir isotherm. 1. Periodic Behavior. *Industrial & Engineering Chemistry Research*, 41: 3676–3687.
58. Han, C. and Harrison, D.P. (1994) Simultaneous shift reaction and carbon dioxide separation for the direct production of hydrogen. *Chemical Engineering Science*, 49: 5875–5883.
59. Harrison, D.P. and Peng, Z. (2003) A37 Low carbon monoxide hydrogen by sorption-enhanced reaction. *International Journal of Chemical Reactor Engineering*, 1.
60. Ortiz, A.L. and Harrison, D.P. (2001) Hydrogen production using sorption-enhanced reaction. *Industrial & Engineering Chemistry Research*, 40: 5102–5109.
61. Zou, Y. and Rodrigues, A.E. (2001) The separation enhanced reaction process (SERP) in the production of hydrogen from methane steam reforming. *Adsorption Science & Technology*, 19: 655–671.
62. Xiu, G.H., Li, P., and Rodrigues, A.E. (2002) Sorption-enhanced reaction process with reactive regeneration. *Chemical Engineering Science*, 57: 3893–3908.
63. Xiu, G.-H., Li, P., and Rodrigues, A.E. (2002) Sorption-enhanced reaction process with reactive regeneration. *Chemical Engineering Science*, 57: 3893–3908.
64. Xiu, G.-H., Soares, J.L., Li, P., and Rodrigues, A.E. (2002) Simulation of five-step one-bed sorption-enhanced reaction process. *AIChE Journal*, 48: 2817–2832.
65. Xiu, G., Li, P., and Rodrigues, a E. (2003) Adsorption-enhanced steam-methane reforming with intraparticle-diffusion limitations. *Chemical Engineering Journal*, 95: 83–93.
66. Xiu, G.H., Li, P., and Rodrigues, A.E. (2003a) Adsorption-enhanced steam-methane reforming with intraparticle-diffusion limitations. *Chemical Engineering Journal*, 95: 83–93.
67. Xiu, G.H., Li, P., and Rodrigues, A.E. (2003b) New generalized strategy for improving sorption-enhanced reaction process. *Chemical Engineering Science*, 58: 3425–3437.

Downloaded by [University of South Carolina] at 12:58 08 June 2016

68. Xiu, G.H., Li, P., and Rodrigues, A.E. (2004) Subsection-controlling strategy for improving sorption-enhanced reaction process. *Chemical Engineering Research and Design*, 82: 192–202.
69. Ding, Y. and Alpay, E. (2000) Adsorption-enhanced steam-methane reforming. *Chemical Engineering Science*, 55: 3929–3940.
70. Ding, Y. and Alpay, E. (2000) Equilibria and kinetics of CO_2 adsorption on hydrotalcite adsorbent. *Chemical Engineering Science*, 55: 3461–3474.
71. Ritter, J.A., Ebner, A.D., Wang, J., and Zidan, R. (2003) Implementing a hydrogen economy. *Materials Today*, 18–23.
72. Sandrock, G. and Thomas, G. (2001) The IEA/DOE/SNL on-line hydride databases. *Applied Physics A-Materials Science & Processing*, 72: 153–155.
73. Yong, Z., Mata, V., and Rodrigues, A. E. (2000) Adsorption of carbon dioxide on basic alumina at high temperatures. *Journal of Chemical and Engineering Data*, 45: 1093–1095.
74. Easley, M.A. and Horn, W.E. (1999) Carbon dioxide adsorption of synthetic meixnerite. USP 5,882,622.
75. Mayorga, S.G., Gaffney, T.R., Brzozowski, J.R., and Weigel, S.J. (2001) Carbon dioxide adsorbents containing magnesium oxide suitable for use at high temperatures. USP 6,280,503 B1.
76. Yong, Z., Mata, V., and Rodrigues, A.E. (2001) Adsorption of carbon dioxide onto hydrotalcite-like compounds (HTlcs) at high temperatures. *Industrial & Engineering Chemistry Research*, 40: 204–209.
77. Yong, Z. and Rodrigues, A.E. (2002) Hydrotalcite-like compounds as adsorbents for carbon dioxide. *Energy Conversion and Management*, 43: 1865–1876.
78. Soares, J.L., Moreira, R., Jose, H.J., Grande, C.A., and Rodrigues, a E. (2004) Hydrotalcite materials for carbon dioxide adsorption at high temperatures: characterization and diffusivity measurements. *Separation Science and Technology*, 39: 1989–2010.
79. Reynolds, S.P., Ebner, A.D., and Ritter, J.A. (2005) New pressure swing adsorption cycles for carbon dioxide sequestration. *Adsorption*, 531–536.
80. Gaffney, T.R., Golden, T.C., Mayorga, S.G., Brzozowski, J.R., and Taylor, F.W. (1999) Carbon dioxide pressure swing adsorption process using modified alumina adsorbents. USP 5,917,136.
81. Xiong, R., Ida, J., and Lin, Y.S. (2003) Kinetics of carbon dioxide sorption on potassium-doped lithium zirconate. *Chem. Eng. Sci.*, 58: 4377–4385.
82. Ida, J.-I. and Lin, Y.S. (2003) Mechanism of high-temperature CO_2 sorption on lithium zirconate. *Environ. Sci. Technol.*, 37: 1999–2004.
83. Ida, J.-I., Xiong, R., and Lin, Y.S. (2004) Synthesis and CO_2 sorption properties of pure and modified lithium zirconate. *Sep. Purification Tech.*, 36: 41–51.
84. Nair, B.N., Yamaguchi, T., Kawamura, H., Nakao, S-I., and Nakagawa, K. (2004) Processing of lithium zirconate for applications in carbon dioxide separation: Structure and properties of the powders. *Journal of the American Ceramic Society*, 87: 68–74.
85. Iyer, M.V., Gupta, H., Sakadjian, B.B., and Fan, L.-S. (2004) Multicyclic study on the simultaneous carbonation and sulfation of high-reactivity CaO. *Industrial & Engineering Chemistry Research*, 43: 3939–3947.
86. Gupta, H. and Fan, L.-S. (2002) Carbonation-calcination cycle using high reactivity calcium oxide for carbon dioxide separation from flue gas. *Industrial & Engineering Chemistry Research*, 41: 4035–4042.

Downloaded by [University of South Carolina] at 12:58 08 June 2016

87. Gupta, H., Iyer, M.V., Sakadjian, B.B., and Fan, L.-S. (2004) Reactive separation of CO_2 using pressure pelletised limestone. *International Journal of Environmental Technology and Management*, 4: 3–20.
88. Kuramoto, K., Fujimoto, S., Morita, A., Shibano, S., Suzuki, Y., Hatano, H., Lin, S.-Y., Harada, M., and Takarada, T. (2003) Repetitive carbonation-calcination reactions of Ca-based sorbents for efficient CO_2 sorption at elevated temperatures and pressures. *Industrial & Engineering Chemistry Research*, 42: 975–981.
89. Abanades, J.C. (2002) The maximum capture efficiency of CO_2 using a carbonation/calcination cycle of $CaO/CaCO_3$. *Chemical Engineering Journal (Amsterdam, Netherlands)*, 90: 303–306.
90. Rabo, J.A., Francis, J.N., and Angell, C.L. (1977) Adsorption of carbon monoxide using silver zeolites. USP 4,019,880.
91. Rabo, J.A., Francis, J.N., and Angell, C.L. (1977) Selective adsorption of carbon monoxide from gas streams. USP 4,019,879.
92. Peng, X.D., Golden, T.C., Pearlstein, R.M., and Pierantozzi, R. (1995) Co adsorbents based on the formation of a supported Cu(Co)Cl complex. *Langmuir*, 11: 534–537.
93. Peng, X.-D. (1996) Co adsorbents with hysteresis. USP 5,529,970.
94. Peng, X.-D., Pierantozzi, R., and Golden, T.C. (1996) Carbon monoxide adsorbents with hysteresis. USP 5,529,763.
95. Wang, Y. and Lin, Y.S. (1998) Sol-gel synthesis and gas adsorption properties of CuCl modified mesoporous alumina. *Journal of Sol-Gel Science and Technology*, 11: 185–195.
96. Hirai, H., Ohtsuka, N., and Shimazawa, T. (1998) Copper(I) chloride-ethanediamine complex supported on silica gel as adsorbent for carbon monoxide. *Reactive & Functional Polymers*, 37: 199–212.
97. Hirai, H., Ootsuka, N., Sakai, K., and Shimazawa, T. (1999) Adsorbent for carbon monoxide. USP 5,922,640.
98. Wang, H.H., Cong, Y., and Yang, W.S. (2003) Investigation on the partial oxidation of methane to syngas in a tubular Ba0.5Sr0.5CO0.8Fe0.2O3-delta membrane reactor. *Catalysis Today*, 82: 157–166.
99. Shao, Z.P., Xiong, G.X., Dong, H., Yang, W.H., and Lin, L.W. (2001) Synthesis, oxygen permeation study and membrane performance of a Ba0.5Sr0.5Co0.8Fe0.2O3-delta oxygen-permeable dense ceramic reactor for partial oxidation of methane to syngas. *Separation and Purification Technology*, 25: 97–116.
100. Dong, H., Shao, Z.P., Xiong, G.X., Tong, J.H., Sheng, S.S., and Yang, W.S. (2001) Investigation on POM reaction in a new perovskite membrane reactor. *Catalysis Today*, 67: 3–13.
101. Balachandran, U., Dusek, J.T., Mieville, R.L., Poeppel, R.B., Kleefisch, M.S. et al. (1995) Dense ceramic membranes for partial oxidation of methane to syngas. *Applied Catalysis A-general*, 133: 19–29.
102. Kharton, V.V., Sobyanin, V.A., Belyaev, V.D. et al. (2004) Methane oxidation on the surface of mixed-conducting La0.3Sr0.7Co0.8Ga0.2O3-delta. *Catalysis Communications*, 5: 311–316.
103. Balachandran, U., Dusek, J.T., Maiya, P.S. et al. (1997) Ceramic membrane reactor for converting methane to syngas. *Catalysis Today*, 36: 265–272.
104. Zhu, D.C., Xu, X.Y., Feng, S.J. et al. (2003) La_2NiO_4 tubular membrane reactor for conversion of methane to syngas. *Catalysis Today*, 82: 151–156.

Downloaded by [University of South Carolina] at 12:58 08 June 2016

105. Bouwmeester, H.J.M. (2003) Dense ceramic membranes for methane conversion. *Catalysis Today*, 82: 141–150.
106. Thursfield, A. and Metcalfe, I.S. (2004) The use of dense mixed ionic and electronic conducting membranes for chemical production. *Journal of Materials Chemistry*, 14: 2475–2485.
107. Uemiya, S. (2004) Brief review of steam reforming using a metal membrane reactor. *Topics in Catalysis*, 29: 79–84.
108. Kikuchi, E. (2000) Membrane reactor application to hydrogen production. *Catalysis Today*, 56: 97–101.
109. Kikuchi, E., Nemoto, Y., Kajiwara, M. et al. (2000) Steam reforming of methane in membrane reactors: comparison of electroless-plating and CVD membranes and catalyst packing modes. *Catalysis Today*, 56: 75–81.
110. Paglieri, S.N. and Way, J.D. (2002) Innovations in palladium membrane research. *Separation and Purification Methods*, 31: 1–169.
111. Armor, J.N. (1998) Applications of catalytic inorganic membrane reactors to refinery products. *Journal of Membrane Science*, 147: 217–233.
112. Rothenberger, K.S. et al. (2004) High Pressure hydrogen permeance of porous stainless steel coated with thin palladium film via electroless plating. *Journal of Membrane Science*, 224: 55–68.
113. Barbieri, G., Violante, V., Dimaio, F.P., Criscuoli, A., and Drioli, E. (1997) Methane steam reforming analysis in a palladium-based catalytic membrane reactor. *Industrial & Engineering Chemistry Research*, 36: 3369–3374.
114. Pan, X.L. et al. (2003) Pd/ceramic hollow fibers for H_2 Separation. *Separation and Purification Technology*, 32: 265–270.
115. Keuler, J.N., Lorenzen, L., and Miachon, S. (2002) Preparing and testing pd films of thickness 1–2 micrometer with high selectivity and high hydrogen permeance. *Separation Science and Technology*, 37: 379–401.
116. Lin, Y.M., Lee, G.L., and Rei, M.H. (1998) An integrated purification and production of hydrogen with a palladium membrane-catalytic reactor. *Catalysis Today*, 44: 343–349.
117. Lin, Y.M., Liu, S.L., Chuang, C.H., and Chu, Y.T. (2003) Effect of incipient removal of hydrogen through palladium membrane on the conversion of methane steam reforming—experimental and modeling. *Catalysis Today*, 82: 127–139.
118. Lin, Y.M. and Rei, M.H. (2000) Process development for generating high purity hydrogen by using supported palladium membrane reactor as steam reformer. *International Journal of Hydrogen Energy*, 25: 211–219.
119. Paturzo, L. and Basile, A. (2002) Methane conversion to syngas in a composite palladium membrane reactor with increasing number of Pd layers. *Industrial & Engineering Chemistry Research*, 41: 1703–1710.
120. Zhao, H.B., Xiong, G.X., Gu, J.H. et al. (1995) Preparation and characterization of novel porous metal/ceramic catalytic membrane materials. *Catalysis Today*, 25: 237–240.
121. Jayaraman, V., Lin, Y.S., Pakala, M.Y. et al. (1995) Fabrication of ultrathin metallic membranes on ceramic supports by sputter-deposition. *J. Memb. Sci.*, 99: 89.
122. Basile, A. and Paturzo, L. (2001) An experimental study of multilayered composite palladium membrane reactors for partial oxidation of methane to syngas. *Catalysis Today*, 67: 55–64.

Downloaded by [University of South Carolina] at 12:58 08 June 2016

123. Basile, A., Paturzo, L., and Lagana, F. (2001) The partial oxidation of methane to syngas in a palladium membrane reactor: simulation and experimental studies. *Catalysis Today*, 67: 65–75.
124. Galuszka, J., Pandey, R.N., and Ahmed, S. (1998) Methane conversion to syngas in a palladium membrane reactor. *Catalysis Today*, 46: 83–89.
125. Gallucci, F., Paturzo, L., Fama, A., and Basile, A. (2004) Experimental study of the methane steam reforming reaction in a dense Pd/Ag membrane reactor. *Industrial & Engineering Chemistry Research*, 43: 928–933.
126. Tosti, S., Adrover, A., Basile, A. et al. (2003) Characterization of thin wall Pd-Ag rolled membranes. *International Journal of Hydrogen Energy*, 28: 105–112.
127. Marigliano, G., Barbieri, G., and Drioli, E. (2001) Effect of energy transport on a palladium-based membrane reactor for methane steam reforming process. *Catalysis Today*, 67: 85–99.
128. Marigliano, G., Barbieri, G., and Drioli, E. (2003) Equilibrium conversion for a Pd-based membrane reactor dependence on the temperature and pressure. *Chemical Engineering and Processing*, 42: 231–236.
129. Roy, S., Cox, B.G., Adris, A.M., and Pruden, B.B. (1998) Economics and simulation of fluidized bed membrane reforming. *International Journal of Hydrogen Energy*, 23: 745–752.
130. Adris, A.E.M. and Grace, J.R. (1997) Characteristics of fluidized-bed membrane reactors: scale-up and practical issues. *Industrial & Engineering Chemistry Research*, 36: 4549–4556.
131. Adris, A.M., Lim, C.J., and Grace, J.R. (1997) The fluidized-bed membrane reactor for steam methane reforming: model verification and parametric study. *Chemical Engineering Science*, 52: 1609–1622.
132. Munera, J., Irusta, S., Cornaglia, L., and Lombardo, E. (2003) CO_2 reforming of methane as a source of hydrogen using a membrane reactor. *Applied Catalysis A-general*, 245: 383–395.
133. Raybold, T.M. and Huff, M.C. (2002) Analyzing enhancement of CO_2 reforming of CH_4 in Pd membrane reactors. *Aiche Journal*, 48: 1051–1061.
134. Ma, D.H. and Lund, C.R.F. (2003) Assessing high-temperature water-gas shift membrane reactors. *Industrial & Engineering Chemistry Research*, 42: 711–717.
135. Aasberg-Petersen, K., Nielsen, C.S., and Jorgensen, S.L. (1998) Membrane reforming for hydrogen. *Catalysis Today*, 46: 193–201.
136. Tosti, S., Basile, A., Chiappetta, G., Rizzello, C., and Violante, V. (2003) Pd-Ag membrane reactors for water gas shift reaction. *Chemical Engineering Journal*, 93: 23–30.
137. Tosti, S., Bettinali, L., and Violante, V. (2000) Rolled thin Pd and Pd-Ag membranes for hydrogen separation and production. *International Journal of Hydrogen Energy*, 25: 319–325.
138. Criscuoli, A., Basile, A., and Drioli, E. (2000) An analysis of the performance of membrane reactors for the water-gas shift reaction using gas feed mixtures. *Catalysis Today*, 56: 53–64.
139. Criscuoli, A., Basile, A., Drioli, E., and Loiacono, O. (2001) An economic feasibility study for water gas shift membrane reactor. *Journal of Membrane Science*, 181: 21–27.
140. Barbieri, G., Marigliano, G., Perri, G., and Drioli, E. (2001) Conversion-temperature diagram for a palladium membrane reactor. Analysis of an endothermic reaction: methane steam reforming. *Ind. Eng. Chem. Res.*, 40: 2017–2026.

Downloaded by [University of South Carolina] at 12:58 08 June 2016

141. Abashar, M.E.E. (2004) Coupling of steam and dry reforming of methane in catalytic fluidized bed membrane reactors. *International Journal of Hydrogen Energy*, 29: 799–808.
142. Hou, K., Fowles, M., and Hughes, R. (1999) Potential catalyst deactivation due to hydrogen removal in a membrane reactor used for methane steam reforming. *Chemical Engineering Science*, 54: 3783–3791.
143. Siriwardane, R.V., Poston, J.A. et al. (2003) Characterization of ceramic-metal composite hydrogen separation membranes consisting of barium oxide, cerium oxide, yttrium oxide and palladium. *Applied Surface Science*, 217: 43–49.
144. Tsuru, T., Tsuge, T., Kubota, S. et al. (2001) Catalytic membrane reaction for methane steam reforming using porous silica membranes. *Separation Science and Technology*, 36: 3721–3736.
145. Kurungot, S. and Yamaguchi, T. (2004) Stability improvement of Rh/gamma-Al_2O_3 catalyst layer by ceria doping for steam reforming in an integrated catalytic membrane reactor system. *Catalysis Letters*, 92: 181–187.
146. Kurungot, S., Yamaguchi, T., and Nakao, S. (2003) Rh/-Al_2O_3 catalytic layer integrated with sol-gel synthesized microporous silica membrane for compact membrane reactor applications. *Catalysis Letters*, 86: 273–278.
147. Prabhu, A.K., Radhakrishnan, R., and Oyama, S.T. (1999) Supported nickel catalysts for carbon dioxide reforming of methane in plug flow and membrane reactors. *Applied Catalysis A-General*, 183: 241–252.
148. Prabhu, A.K. and Oyama, S.T. (1999) Development of a hydrogen selective ceramic membrane and its application for the conversion of greenhouse gases. *Chemistry Letters*, 213–214.
149. Prabhu, A.K. and Oyama, S.T. (2000) Highly hydrogen selective ceramic membranes: application to the transformation of greenhouse gases. *Journal of Membrane Science*, 176: 233–248.
150. Lee, D., Hacarlioglu, P., and Oyama, S.T. (2004) The effect of pressure in membrane reactors: trade-off in permeability and equilibrium conversion in the catalytic reforming of CH_4 with CO_2. *Topics in Catalysis*, 29: 45–57.
151. Liu, B.S. and Au, C.T. (2001) A La_2NiO_4-zeolite membrane reactors for the CO_2 reforming of methane to syngas. *Catalysis Letters*, 77: 67–74.
152. Liu, B.S., Gao, L.Z., and Au, C.T. (2002) Preparation, characterization and application of a catalytic Na A membrane for CH_4/CO_2 reforming to syngas. *Applied Catalysis A-General*, 235: 193–206.
153. Ferreira-aparicio, P., Rodriguez-Ramos, I., and Guerrero-Ruiz, A. (2002) On the applicability of membrane technology to the catalysed dry reforming of methane. *Applied Catalysis A-general*, 237: 239–252.
154. Ferreira-Aparisio, P., Rodriguez-Ramos, I., and Guerrero-Ruiz, A. (2002) On the performance of porous vycor membranes for conversion enhancement in the dehydrogenation of methylcyclohexane to toluene. *Journal of Catalysis*, 212: 182–192.
155. Ioannides, T. and Verykios, X.E. (1996) Application of a dense silica membrane reactor in the reactions of dry reforming and partial oxidation of methane. *Catalysis Letters*, 36: 165–169.
156. Hasegawa, Y., Kusakabe, K., and Morooka, S. (2001) Selective oxidation of carbon monoxide in hydrogen-rich mixtures by permeation through a platinum-loaded Y-type zeolite membrane. *Journal of Membrane Science*, 190: 1–8.

Downloaded by [University of South Carolina] at 12:58 08 June 2016

157. Giessler, S., Jordan, L., da costa, J.C.D., and Lu, G.Q. (2003) Performance of hydrophobic and hydrophilic silica membrane reactors for the water gas shift reaction. *Separation and Purification Technology*, 32: 255–264.
158. Bracht, M., Alderliesten, P.T., and Kloster, R. (1997) Water gas shift membrane reactor for CO_2 control in IGCC systems: techno-economic feasibility study. *Energy Conversion and Management*, 38: S159–S164.
159. Freeman, B.D. (1999) Basis of permeability/selectivity tradeoff relations in polymeric gas separation membranes. *Macromolecules*, 32: 375–380.
160. Orme, C.J., Stone, M.L., Benson, M.T., and Peterson, E.S. (2003) Testing of polymer membranes for the selective permeability of hydrogen. *Separation Science and Technology*, 38: 3225–3238.
161. Hradil, J., Krystl, V. et al. (2004) Heterogeneous membranes based on polymeric adsorbents for separation of small molecules. *Reactive & Functional Polymers*, 61: 303–313.
162. Patel, N.P., Aberg, C.M., Sancheza, M. et al. (2004) Morphological, mechanical and gas-transport characteristics of crosslinked poly(propylene glycol): homopolymers, nanocomposites and blends. *Polymer*, 45: 5941–5950.
163. Patel, N.P., Miller, A.C., and Spontak, R.J. (2004) Highly CO_2-permeable and -selective membranes derived from crosslinked poly(ethylene glycol) and its nanocomposites. *Advanced Functional Materials*, 14: 699–707.
164. Patel, N.P., Miller, A.C., and Spontak, R.J. (2003) Highly CO_2-permeable and selective polymer nanocomposite membranes. *Advanced Materials*, 15: 729–733.
165. Merkel, T.C., Bondar, V. et al. (1999) Gas sorption, diffusion, and permeation in poly(2,2-bis(trifluoromethyl)-4,5-difluoro-1,3-dioxole-co-tetrafluoroethylene. *Macromolecules*, 32: 8427–8440.
166. Morisato, A. and Pinnau, I. (1996) Synthesis and gas permeation properties of poly(4-methyl-2-pentyne). *J. Membrane Sci.*, 121: 243–250.
167. Morisato, A., Shen, H.C., Sankar, S.S. et al. (1996) Polymer characterization and gas permeability of poly(1-trimethylsilyl-1-propyne) [Ptmsp], poly(1-Phenyl-1-Propyne). *Journal of Polymer Science Part B-polymer Physics*, 34: 2209–2230.
168. Kuraoka, K., Chujo, Y., and Yazawa, T. (2001) Hydrocarbon separation via porous glass membranes surface-modified using organosilane compounds. *Journal of Membrane Science*, 182: 139–149.
169. Pinnau, I. and He, Z. (2004) Pure- and mixed-gas permeation properties of polydimethylsiloxane for hydrocarbon/methane and hydrocarbon/hydrogen separation. *Journal of Membrane Science*, 244: 227–233.
170. Anand, M., Langsam, M., Rao, M.B., and Sircar, S. (1997) Multicomponent gas separation by selective surface flow (SSF) and polytrimethylsilylpropyne (PTMSP) membranes. *Journal of Membrane Science*, 123: 17–25.
171. Paranjape, M., Clarke, P.F., Pruden, B.B., Parrillo, D.J., Thaeron, C., and Sircar, S. (1998) Separation of bulk carbon dioxide-hydrogen mixtures by selective surface flow membrane. *Adsorption*, 4: 355–360.
172. Singh, R.P., Way, J.D., and Mccarley, K.C. (2004) Development of a model surface flow membrane by modification of porous vycor glass with a fluorosilane. *Industrial & Engineering Chemistry Research*, 43: 3033–3040.
173. Mccarley, K.C. and Way, J.D. (2001) Development of a model surface flow membrane by modification of porous g-alumina with octadecyltrichlorosilane. *Separation and Purification Technology*, 25: 195–210.

Downloaded by [University of South Carolina] at 12:58 08 June 2016

174. Kim, Y., Yang, W.S. et al. (2004) Thermal evolution of the structure of a Mg-Al-CO_3 layered double hydroxide: Sorption reversibility aspects. *Industrial & Engineering Chemistry Research*, 43: 4559–4570.
175. Paturzo, L., Gallucci, F., Basile, A., Vitulli, G., and Pertici, P. (2003) A Ru-based catalytic membrane reactor for dry reforming of methane—its catalytic performance compared with tubular packed bed reactors. *Catalysis Today*, 82: 57–65.
176. Duke, M.C., Diniz da Costa, J.C. et al. (2004) Carbonised template molecular sieve silica membranes in fuel processing systems: permeation, hydrostability and regeneration. *Journal of Membrane Science*, 241: 325–333.
177. So, J.H., Yang, S.M., and Park, S.B. (1998) Preparation of silica-alumina composite membranes for hydrogen separation by multi-step pore modifications. *J. Membrane Sci.*, 147: 147–152.
178. Iwamoto, Y., Sato, K., Kato, T., Inada, T., and Kubo, Y. (2004) A hydrogen-permselective amorphous silica membrane derived from polysilazane. *Journal of the European Ceramic Society*, 25: 257–264.
179. Morooka, S., Yan, S., Kusakabe, K., and Akiyama, Y. (1995) Formation of hydrogen-permselective SiO_2 membrane in macropores of alpha-alumina support tube by thermal-decomposition of TEOS. *J. Membrane Sci.*, 101: 89–98.
180. Lee, D.W. et al. (2003) Preparation and characterization of SiO_2 composite membrane for purification of hydrogen from methanol steam reforming as an energy. *Separation and Purification Technology*, 32: 45–50.
181. Chao, C.C. and Tsai, D.S. (2001) Si-Al-C Gas separation membranes derived from polydimethylsilane and aluminum acetylacetonate. *J. Membrane Sci.*, 192: 209–216.
182. Sznejer, G.A., Efremenko, I., and Sheintuch, M. (2004) Carbon membranes for high temperature gas separations: experiment and theory. *AIChE Journal*, 50: 596–610.
183. Pesiri, D.R., Jorgensen, B., and Dye, R.C. (2003) Thermal optimization of polybenzimidazole meniscus membranes for the separation of hydrogen, methane, and carbon dioxide. *J. Membrane Sci.*, 218: 11–18.
184. Kulprathipanja, A., Alptekin, G.O. et al. (2004) Effects of water gas shift gases on Pd-Cu alloy membrane surface morphology and separation properties. *Ind. Eng. Chem. Res.*, 43: 4188–4198.
185. Kusuki, Y., Shimazaki, H. et al. (1997) Gas permeation properties and characterization of asymmetric carbon membranes prepared by pyrolyzing asymmetric polyimide hollow fiber. *J. Membrane Sci.*, 134: 245–253.
186. Geiszler, V.C. and Koros, W.J. (1996) Effects of polyimide pyrolysis conditions on carbon molecular sieve membrane properties. *Industrial & Engineering Chemistry Research*, 35: 2999–3003.
187. Kusakabe, K., Li, Z.Y., Maeda, H., and Morooka, S. (1995) Preparation of supported composite membrane by pyrolysis of polycarbosilane for gas separation at high-temperature. *Journal of Membrane Science*, 103: 175–180.
188. Yong, H.H., Park, N.C., Kang, Y.S. et al. (2001) Zeolite-filled polyimide membrane containing 2,4,6-triaminopyrimidine. *J. Membrane Sci.*, 188: 151–163.
189. Feng, X.S., Shao, P.H. et al. (2002) A Study of silicone rubber/polysulfone composite membranes: correlating H_2/N_2 and O_2/N_2 permselectivities. *Separation and Purification Technology*, 27: 211–223.
190. Smaihi, M., Schrotter, J.C. et al. (1999) Gas separation properties of hybrid imide-siloxane copolymers with various silica contents. *J. Membrane Sci.*, 161: 157–170.

Downloaded by [University of South Carolina] at 12:58 08 June 2016

191. Wang, D.L., Li, K., and Teo, W.K. (1995) Effects of temperature and pressure on gas permselection properties in asymmetric membranes. *J. Membrane Sci.*, 105: 89–115.
192. Wang, Z.G., Chen, T.L., and Xu, J.P. (2000) Gas transport properties of novel cardo poly(aryl ether ketone)s with pendant alkyl groups. *Macromolecules*, 33: 5672–5679.
193. Langsam, M. and Laciak, D.V. (2000) Synthesis and gas transport properties of random amide imide copolymers. *Journal of Polymer Science Part A-Polymer Chemistry*, 38: 1951–1965.
194. Bonhomme, F., Welk, M.E., and Nenoff, T.M. (2003) CO_2 Selectivity and Lifetimes of High Silica ZSM-5 Membranes. *Microporous and Mesoporous Materials*, 66: 181–188.
195. Pinnau, I. and Toy, L.G. (1996) Gas and vapor transport properties of amorphous perfluorinated copolymer membranes based on 2,2-bistrifluoromethyl-4,5-difluoro-1,3-dioxole/tetrafluoroethylene. *Journal of Membrane Science*, 109: 125–133.

Downloaded by [University of South Carolina] at 12:58 08 June 2016