US011143145B2

(12) **United States Patent**
Collie et al.

(10) **Patent No.: US 11,143,145 B2**
(45) **Date of Patent: Oct. 12, 2021**

(54) **BATTERYLESS DUAL FUEL ENGINE WITH LIQUID FUEL CUT-OFF**

(71) Applicant: **Champion Power Equipment, Inc.**, Santa Fe Springs, CA (US)

(72) Inventors: **Kendall J. Collie**, Anaheim Hills, CA (US); **Mark J. Sarder**, Waukesha, WI (US); **Aleko D. Sotiriades**, Cedarburg, WI (US); **James J. Dehn**, Brookfield, WI (US); **Leigh A. Jenison**, Hartland, WI (US); **Hiroaki Sato**, Brookfield, WI (US)

(73) Assignee: **Champion Power Equipment, Inc.**, Santa Fe Springs, CA (US)

(*) Notice: Subject to any disclaimer, the term of this patent is extended or adjusted under 35 U.S.C. 154(b) by 0 days.

(21) Appl. No.: **16/946,438**

(22) Filed: **Jun. 22, 2020**

(65) **Prior Publication Data**

US 2020/0318578 A1 Oct. 8, 2020

Related U.S. Application Data

(63) Continuation of application No. 14/925,441, filed on Oct. 28, 2015, now Pat. No. 10,697,398, which is a (Continued)

(51) **Int. Cl.**
F02M 43/00 (2006.01)
F02D 19/00 (2006.01)
(Continued)

(52) **U.S. Cl.**
CPC ..... ***F02M 17/38*** (2013.01); ***F02B 43/00*** (2013.01); ***F02B 63/04*** (2013.01); (Continued)

(58) **Field of Classification Search**
CPC ..... F02M 13/08; F02M 57/06; F02M 43/00; F02M 19/06; F02M 7/10; F02M 21/0215; (Continued)

(56) **References Cited**

U.S. PATENT DOCUMENTS

2,398,437 A 4/1946 McGill et al.
3,911,956 A 10/1975 LeBreton et al.
(Continued)

FOREIGN PATENT DOCUMENTS

CN 2401704 Y 10/2000
DE 102006008524 A1 8/2006
(Continued)

OTHER PUBLICATIONS

Multi-Power Ltd., MODELMP5500DF 13 HP Generator Owner's Manual, Jul. 2006, pp. 1-38.
(Continued)

Primary Examiner — Long T Tran
(74) *Attorney, Agent, or Firm* — Ziolkowski Patent Solutions Group, SC

(57) **ABSTRACT**

A dual fuel engine includes an engine operable on a gaseous fuel and a liquid fuel and a switch to change operation of the engine between gaseous fuel and liquid fuel. The dual fuel engine also includes a carburetor attached to an intake of the engine to mix air and fuel and connect to a gaseous fuel source and a liquid fuel source. A liquid fuel cut-off attaches to the carburetor to interrupt liquid fuel upon actuation of the switch from liquid fuel to gaseous fuel.

19 Claims, 12 Drawing Sheets

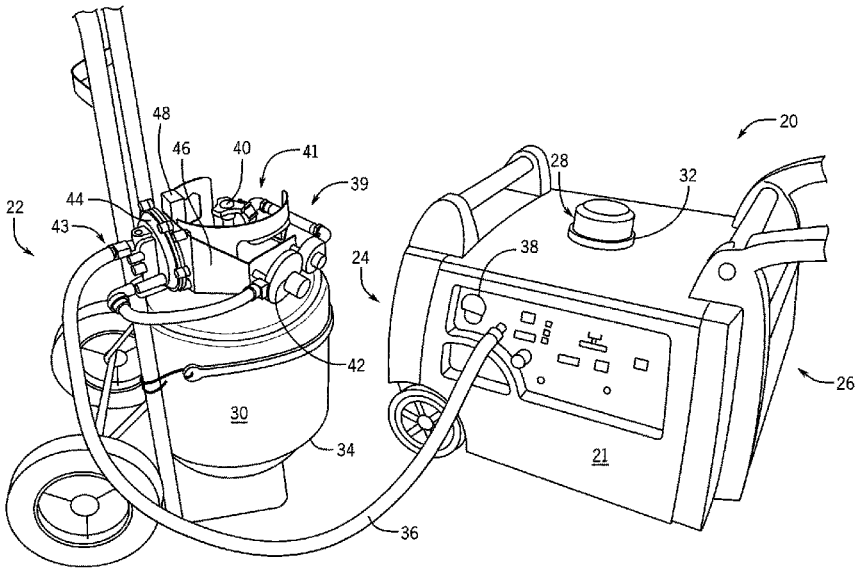

Related U.S. Application Data

continuation-in-part of application No. 14/738,060, filed on Jun. 12, 2015, now Pat. No. 10,221,781.

(51) **Int. Cl.**

F02D 41/00	(2006.01)
F02M 17/38	(2006.01)
F02M 13/08	(2006.01)
F02D 19/06	(2006.01)
F02B 43/00	(2006.01)
F02M 17/10	(2006.01)
F02M 21/02	(2006.01)
F02B 63/04	(2006.01)
F02D 41/06	(2006.01)
F02M 21/04	(2006.01)
F02M 19/08	(2006.01)
F02N 3/02	(2006.01)

(52) **U.S. Cl.**

CPC ***F02D 19/0613*** (2013.01); ***F02M 13/08*** (2013.01); ***F02M 17/10*** (2013.01); ***F02M 21/0212*** (2013.01); ***F02M 43/00*** (2013.01); *F02D 41/0025* (2013.01); *F02D 41/062* (2013.01); *F02M 19/08* (2013.01); *F02M 21/047* (2013.01); *F02N 3/02* (2013.01); *Y02T 10/30* (2013.01)

(58) **Field of Classification Search**

CPC F02M 35/10196; F02D 19/0647; F02D 19/0613; F02D 29/06; F02D 41/0025

See application file for complete search history.

(56) **References Cited**

U.S. PATENT DOCUMENTS

4,287,908	A	9/1981	Storgard	
4,323,046	A	4/1982	Barber	
4,364,370	A	12/1982	Smith et al.	
4,375,795	A	3/1983	Billingsley	
4,416,244	A	11/1983	McDonald	
4,471,805	A	9/1984	Solie et al.	
4,492,207	A	1/1985	Hallberg	
4,750,514	A	6/1988	Omori et al.	
4,788,960	A	12/1988	Oshizawa	
5,555,873	A	9/1996	Nolen	
5,682,845	A *	11/1997	Woody	F02B 33/04 123/73 A
5,934,320	A	8/1999	O'Reilly et al.	
6,543,395	B2	4/2003	Green	
6,591,817	B2	7/2003	Deutsch	
7,591,257	B2	9/2009	Bayer et al.	
7,802,562	B2	9/2010	Lippa et al.	
7,905,469	B2	3/2011	Nickels et al.	
7,954,479	B2	6/2011	Kojima et al.	
8,042,569	B2	10/2011	Morris	
8,616,159	B1 *	12/2013	Hawkins	F02B 63/047 123/2
8,757,139	B2	6/2014	Deng	
8,944,027	B2	2/2015	Montgomery	
9,175,601	B2	11/2015	Markoski	
9,523,497	B2	12/2016	Deng	
2007/0137591	A1	6/2007	Sugimoto et al.	
2007/0215223	A1	9/2007	Morris	
2009/0320789	A1 *	12/2009	Lund	F02D 19/0644 123/299
2015/0034025	A1 *	2/2015	Markoski	F02N 3/02 123/2
2015/0308356	A1 *	10/2015	Taniguchi	F02M 21/0236 123/495
2017/0009670	A1 *	1/2017	Sorge	F02D 19/0615
2017/0130676	A1 *	5/2017	Markoski	F02D 11/02
2018/0080392	A1 *	3/2018	Janscha	F02B 69/04

FOREIGN PATENT DOCUMENTS

EP	1826377	A2	8/2007
FR	2220679	A1	10/1974
FR	2510660	A1	2/1983
GB	189800	A	10/1923
GB	532903	A	2/1941
JP	H0466743	A	3/1992
WO	1999001659	A1	1/1999
WO	2007048633	A1	5/2007

OTHER PUBLICATIONS

Winco Inc., Home Power Tri-Fuel Portable Generators Owners Manual, Nov. 21, 2017, pp. 1-16.

Winco Inc., HPS9000VE/E and HPS9000VE-03/A Generator Installation and Operators Manual, Aug. 9, 2013, pp. 1-16.

Winco Inc., Dyna ME5000VA Installation, Operation, and Maintenance Instructions, Nov. 21, 2017, pp. 1-12.

Winco Inc., Dyna DL9000E, DL5000H, and D3000 Portable Generators Installation, Operation, and Maintenance Instructions, Nov. 21, 2017, pp. 1-12.

PowerLand Industrial Tools, Powerland Tri Fuel Generator Owner's Manual, Dec. 24, 2015, pp. 1-41.

Winco Inc., HPS6000HE/I Bi-Fuel Generator Installation and Operators Manual, Mar. 8, 2010, pp. 1-20.

Yamaha EF2000iS Tri Fuel Conversion: Overview & Installation Tips, Jan. 3, 2014, https://www.youtube.com/watch?v=caZawwDaRQg.

* cited by examiner

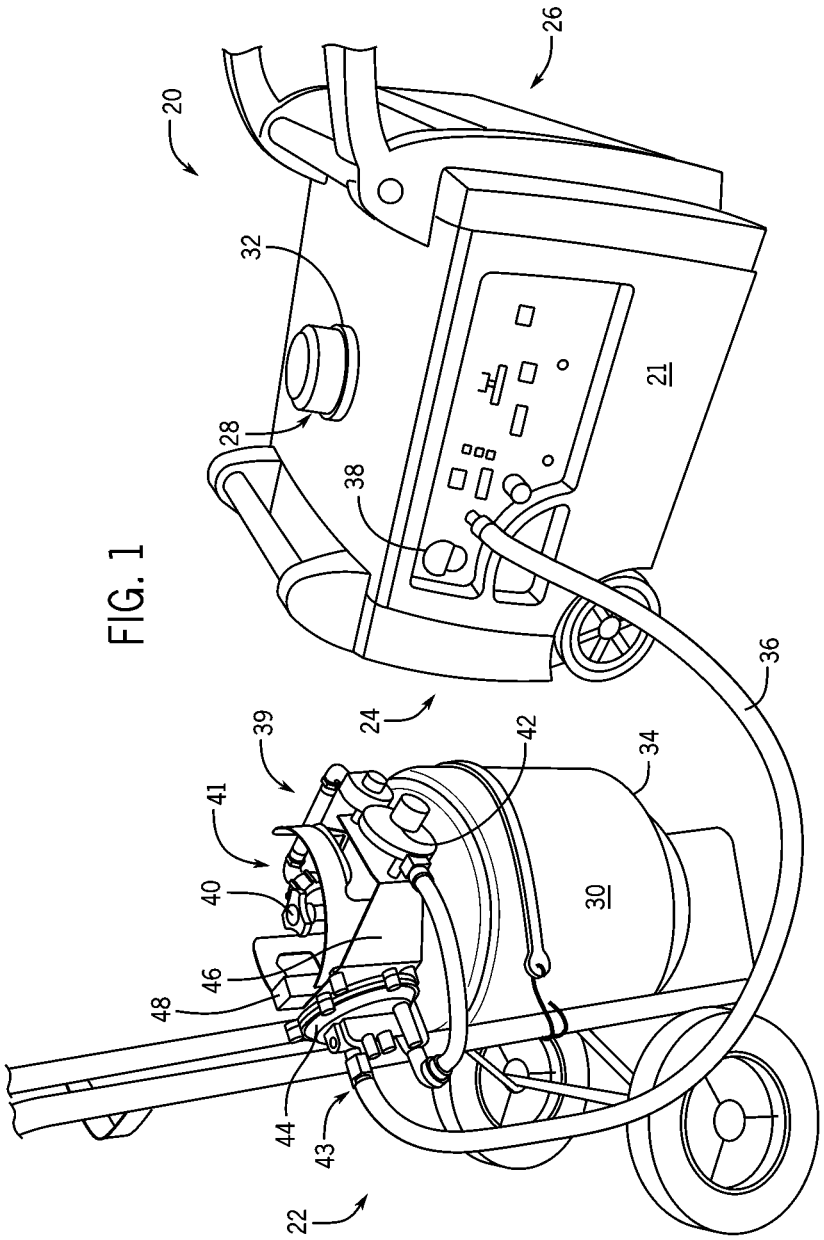

FIG. 1

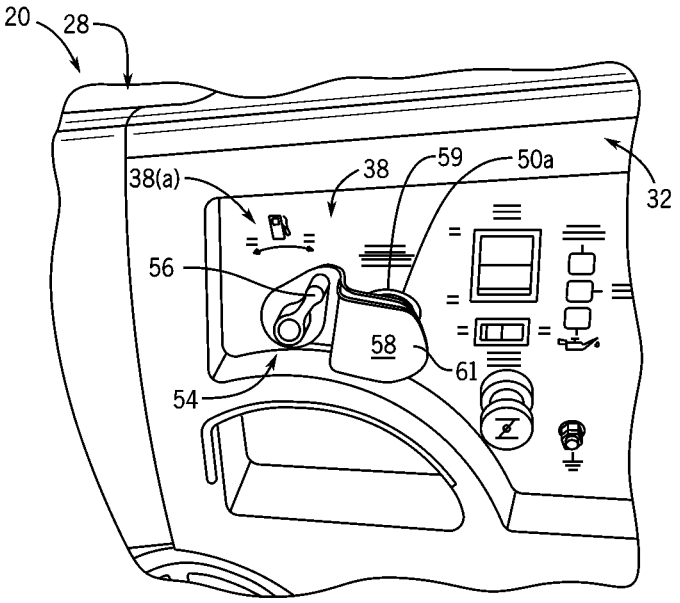
20
28
38(a)
38
59
50a
32
56
58
61
54

FIG. 2

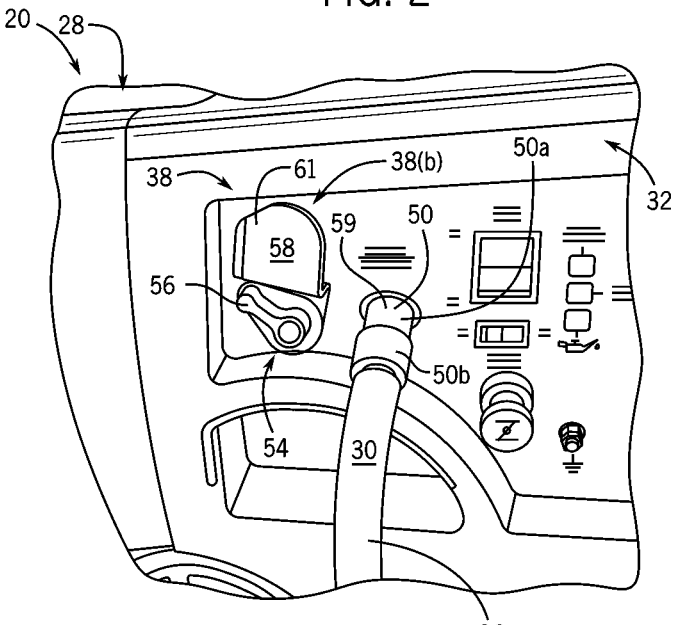
20
28
38
61
38(b)
50a
32
59
50
58
56
50b
54
30
36

FIG. 3

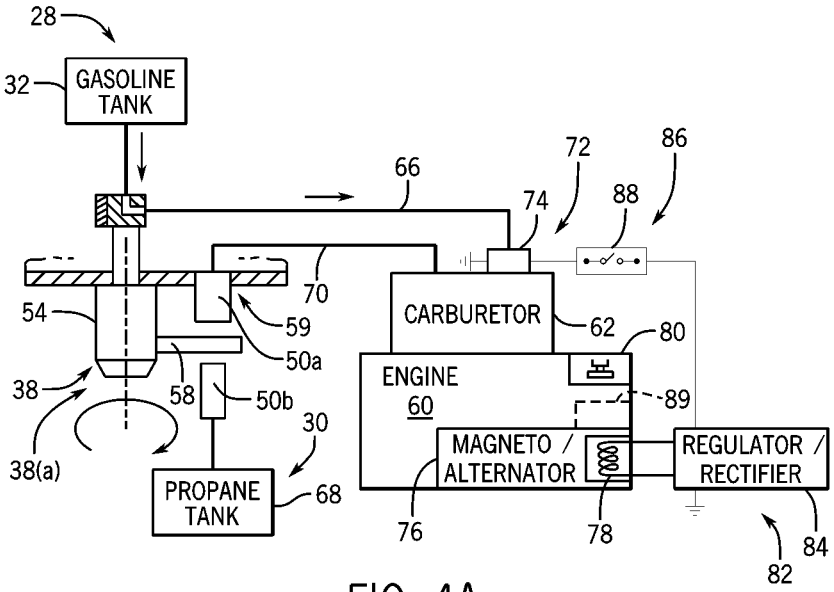
28
32
GASOLINE TANK
66
72
86
74
88
70
54
59
50a
CARBURETOR
62
80
38
58
50b
ENGINE
60
89
30
38(a)
MAGNETO / ALTERNATOR
REGULATOR / RECTIFIER
PROPANE TANK
68
76
78
84
82

FIG. 4A

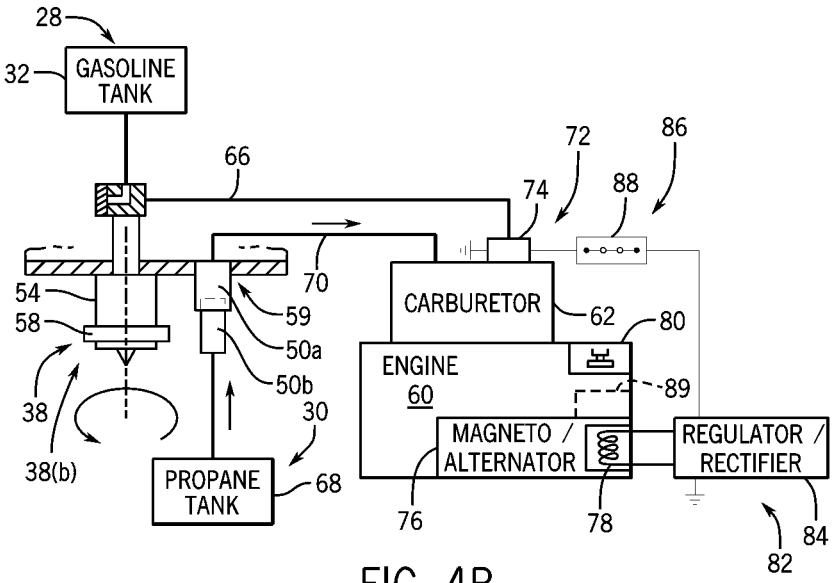
28
32
GASOLINE TANK
66
72
86
74
88
70
54
58
59
50a
CARBURETOR
62
80
38
50b
ENGINE
60
89
30
38(b)
MAGNETO / ALTERNATOR
REGULATOR / RECTIFIER
PROPANE TANK
68
76
78
84
82

FIG. 4B

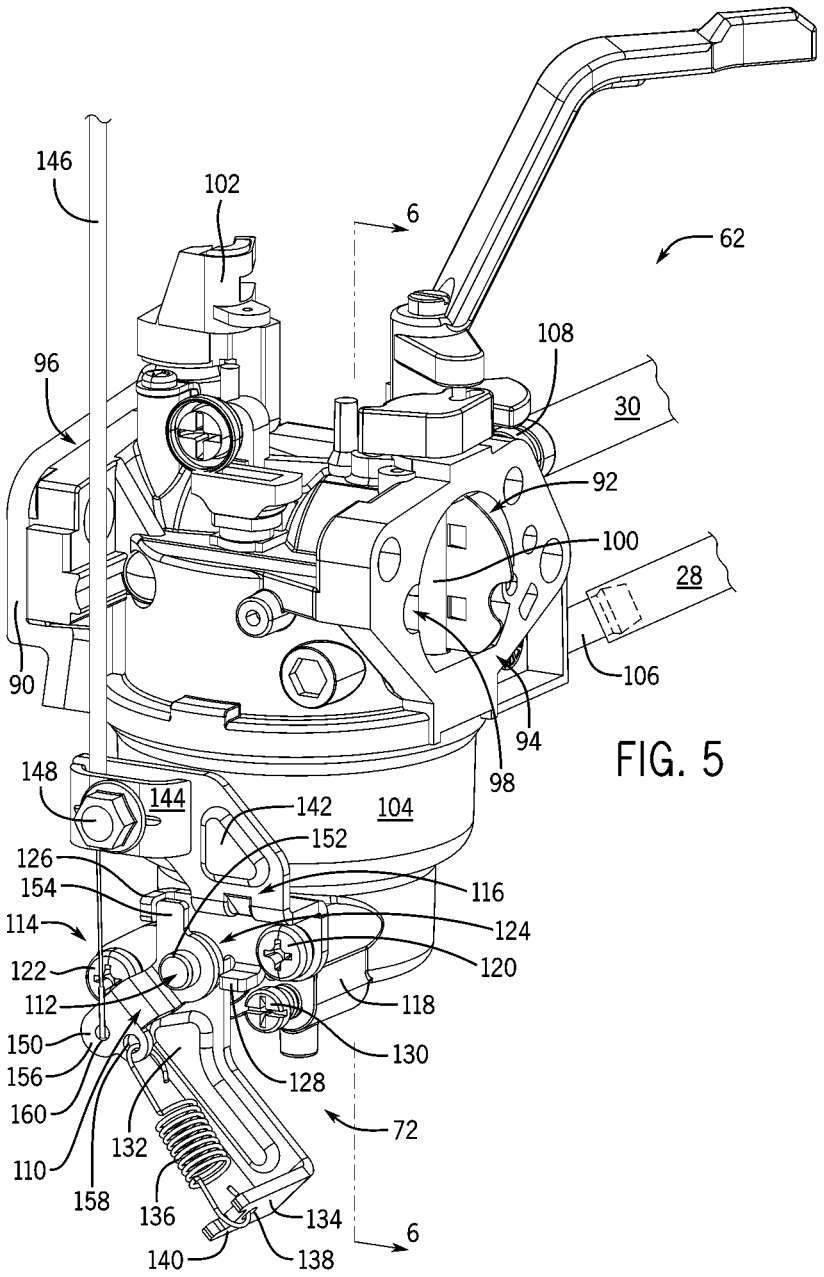
146
102
6
62
108
96
30
92
100
28
90
106
94
98
148
144
142
104
152
126
154
116
114
124
122
120
112
118
150
130
156
128
160
72
132
110
158
136
134
140
138
6

FIG. 5

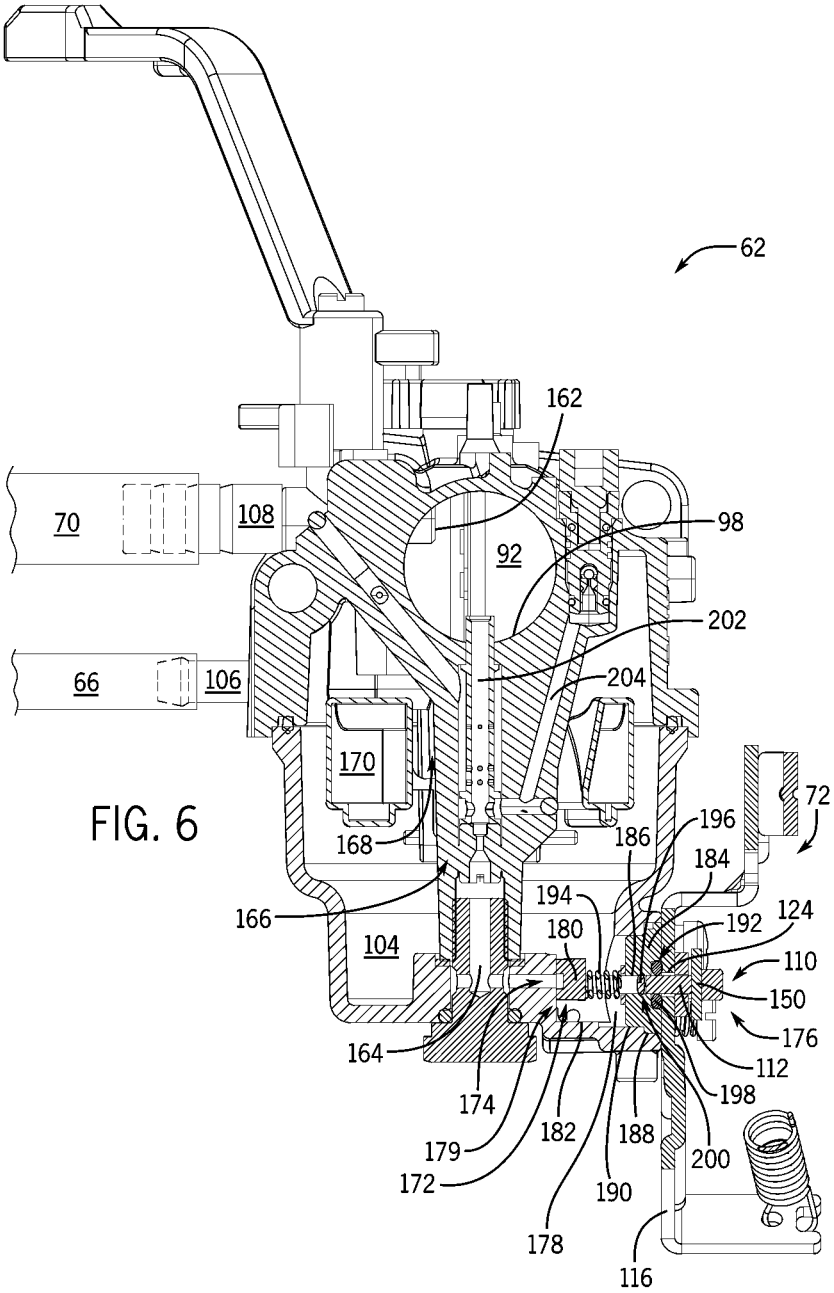
62
162
70
108
98
92
202
66
106
204
170
72
168
186
196
184
194
166
180
192
124
104
110
150
176
164
112
174
198
179
182
188
200
172
190
178
116

FIG. 6

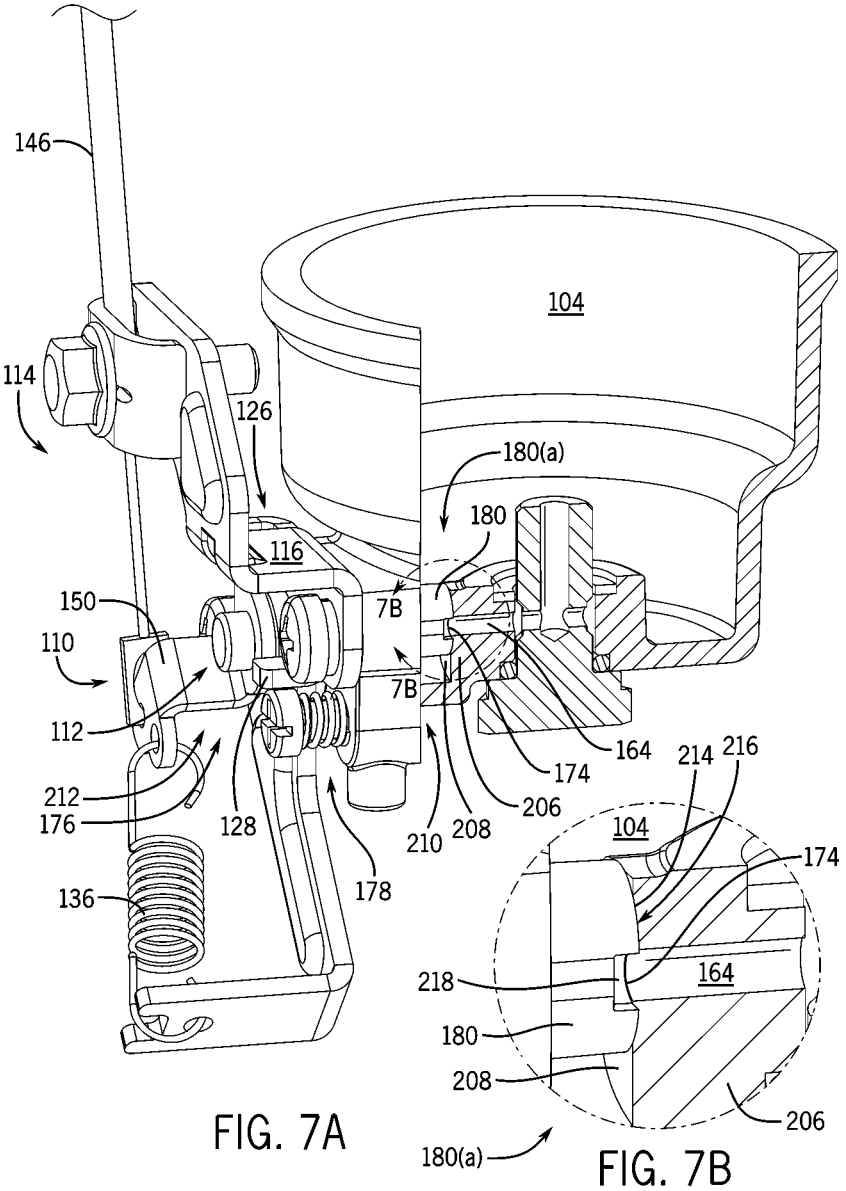
146
104
114
126
180(a)
180
116
150
7B
110
7B
112
164
214
216
212
174
176
128
206
210
208
104
174
136
178
218
164
180
208
206
180(a)

FIG. 7A

FIG. 7B

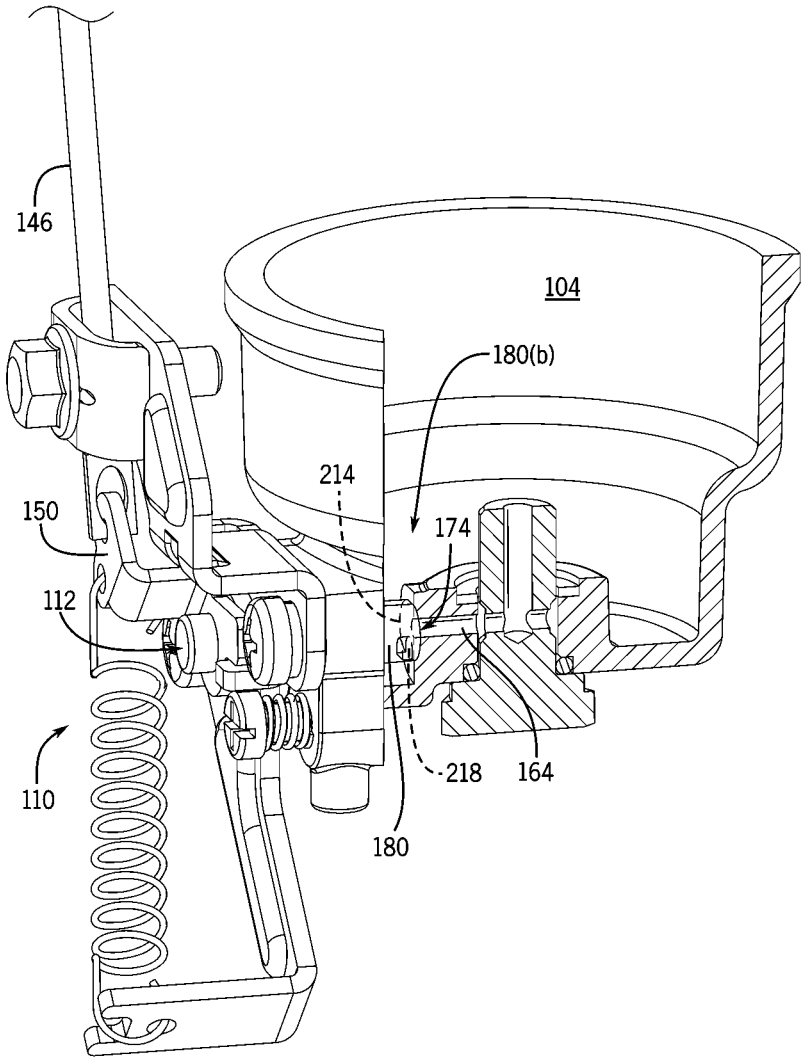

FIG. 8

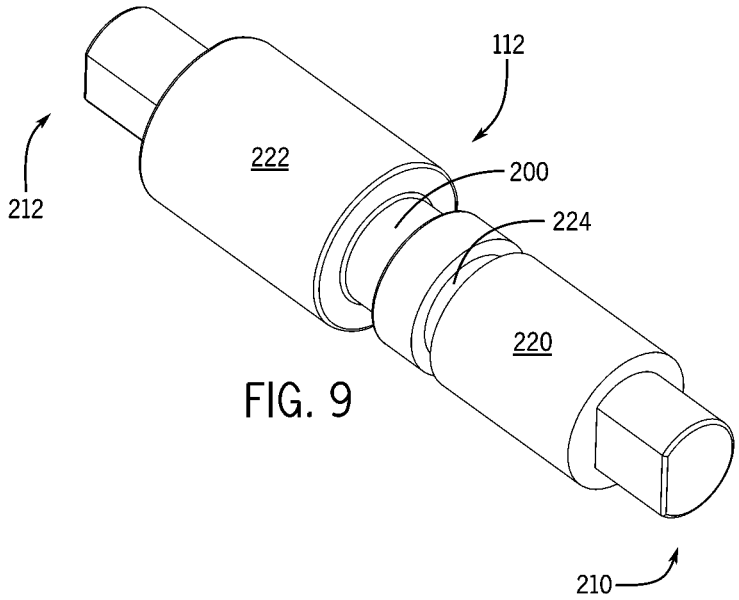

FIG. 9

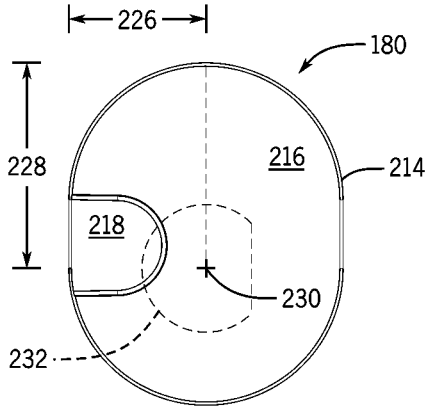

FIG. 10

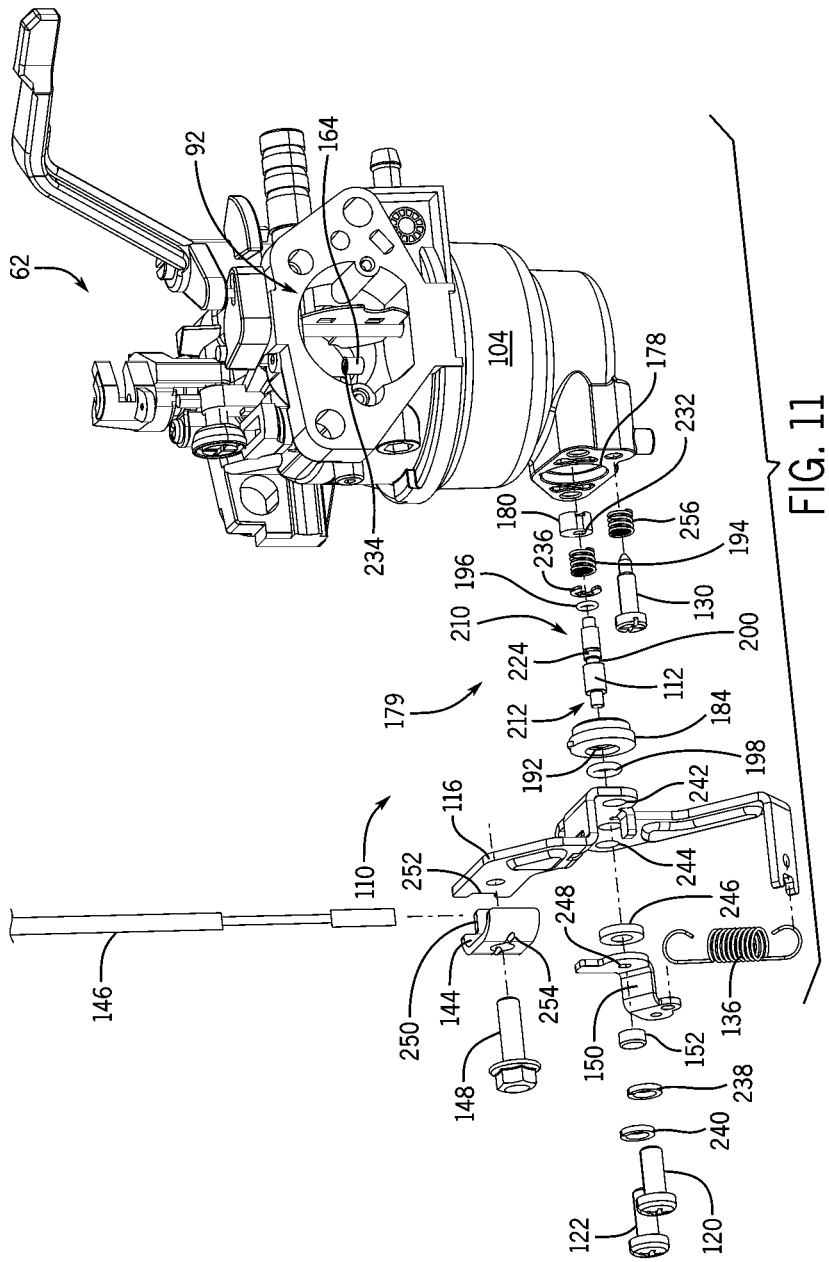
62
92
164
104
178
232
180
256
194
236
196
130
210
200
224
112
179
212
184
192
198
242
116
110
252
244
248
246
146
250
144
254
136
150
152
148
238
240
122
120

FIG. 11

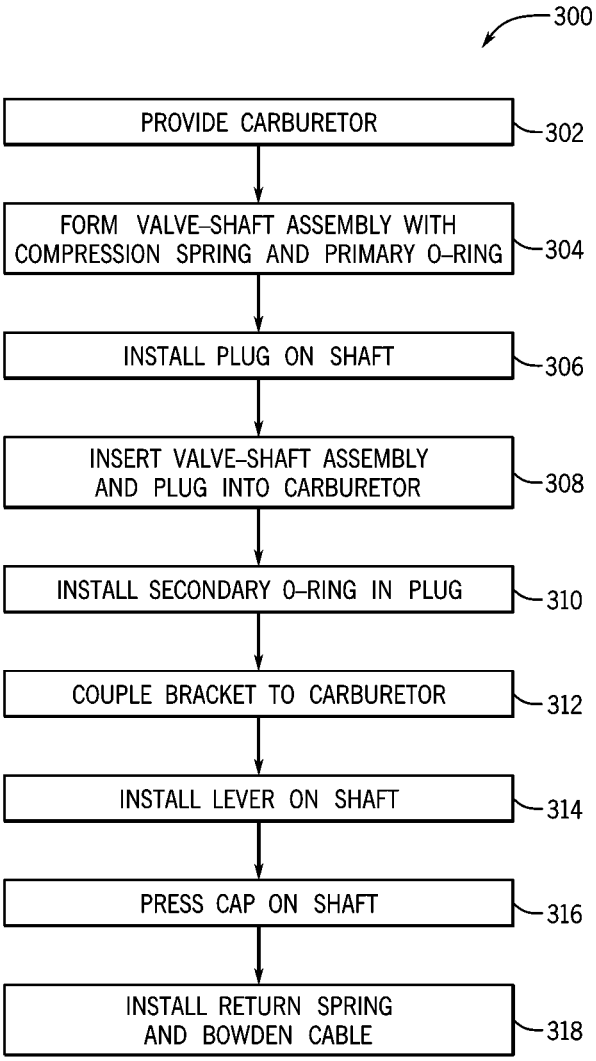
300
PROVIDE CARBURETOR
302
FORM VALVE-SHAFT ASSEMBLY WITH COMPRESSION SPRING AND PRIMARY O-RING
304
INSTALL PLUG ON SHAFT
306
INSERT VALVE-SHAFT ASSEMBLY AND PLUG INTO CARBURETOR
308
INSTALL SECONDARY O-RING IN PLUG
310
COUPLE BRACKET TO CARBURETOR
312
INSTALL LEVER ON SHAFT
314
PRESS CAP ON SHAFT
316
INSTALL RETURN SPRING AND BOWDEN CABLE
318

FIG. 12

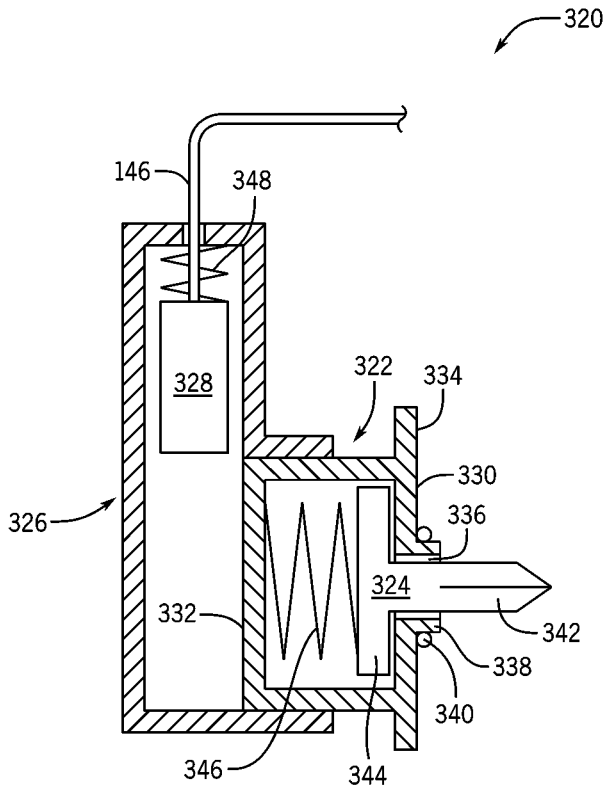

FIG. 13

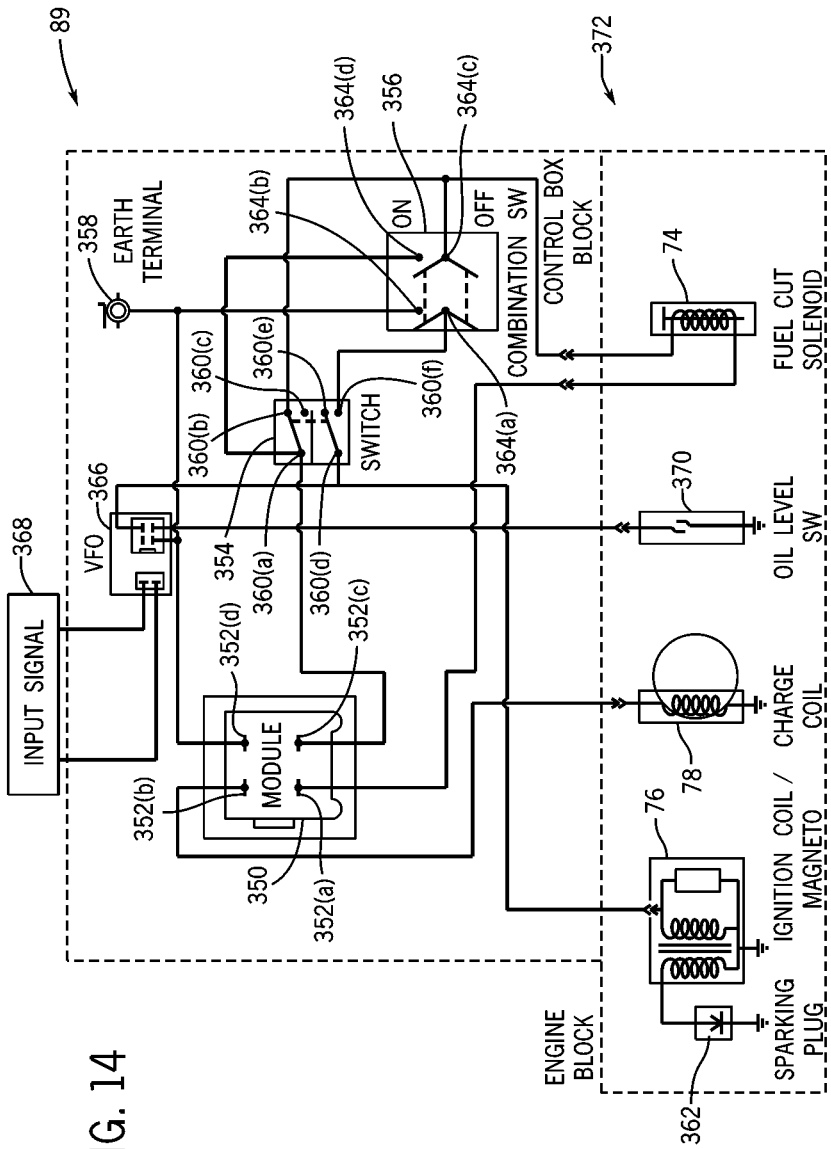
89
372
358
EARTH TERMINAL
364(d)
356
364(c)
364(b)
ON
OFF
COMBINATION SW
CONTROL BOX BLOCK
74
FUEL CUT SOLENOID
360(c)
360(e)
360(f)
360(b)
SWITCH
364(a)
366
VFO
368
INPUT SIGNAL
354
360(a)
360(d)
370
OIL LEVEL SW
352(d)
352(c)
352(b)
MODULE
350
352(a)
CHARGE COIL
78
76
IGNITION COIL / MAGNETO
SPARKING PLUG
362
ENGINE BLOCK

FIG. 14

BATTERYLESS DUAL FUEL ENGINE WITH LIQUID FUEL CUT-OFF

CROSS-REFERENCE TO RELATED APPLICATION

The present application is a continuation of, and claims priority to U.S. patent application Ser. No. 14/925,441, filed Oct. 28, 2015, which is a continuation-in-part of, and claims priority to, U.S. patent application Ser. No. 14/738,060, filed Jun. 12, 2015, now Issued U.S. Pat. No. 10,221,780, issued Mar. 5, 2019, the disclosures of which are incorporated herein by reference in their entirety.

BACKGROUND OF THE INVENTION

Embodiments of the invention relate generally to dual fuel generators, and more particularly, to an apparatus and method for delivering liquid fuel or gaseous fuel to a dual fuel generator.

Electric generators are frequently driven by internal combustion engines that use gasoline as a fuel source. Gasoline is a common fuel source for generators in a variety of applications. However, alternative fuel sources also provide a desirable fuel source. For instance, alternative fuels may provide a clean burning fuel that limits hazardous emissions. Alternative fuels may also be stored for long periods of time without degradation, whereas gasoline can degrade over a period of months leading to hard starting, rough running, and also lead to gum and varnish deposit left in the fuel system. In addition, generators that operate on alternative fuels may generate electricity when gasoline is not readily available. For instance, generators are frequently used when power outages in the utility grid result from severe weather. Unfortunately, gas stations may also be closed as a result of the power outage. Such a circumstance presents just one example where it would be advantageous to operate electrical generators on alternative fuels.

Certain generators are configured to operate as "dual fuel" generators, otherwise known as bi-fuel generators. These generators are driven by an internal combustion engine that is configured to operate on a liquid fuel for a period of operation and an alternative fuel for another period of operation. The alternative fuel source is generally a gaseous fuel that may exist in a gaseous state at normal temperature and pressure and can be any one of liquefied petroleum gas, compressed natural gas, hydrogen, or the like. Liquefied petroleum gas (LPG), often referred to as propane, exists in a gaseous state at normal temperature and pressure but can be conveniently stored under pressure in a liquid state. LPG may be a desirable fuel source for internal combustion engines because it can be stored for longer periods of time and contains fewer impurities than gasoline, resulting in smoother and cleaner operation, and often resulting in a longer lasting engine.

In order to provide the liquid and gaseous fuel to the engine, the dual fuel engine may have a first fuel line for liquid fuel and a second fuel line for gaseous fuel. A liquid fuel source and a gaseous fuel source may be coupled to the respective lines to provide fuel to the engine. However, a common problem with such configurations that couple two fuel sources to a single engine is the engine can experience overly rich air-fuel ratio when both fuels are simultaneously engaged during cross-over switching between the fuel sources. Such simultaneous delivery of fuel from the first fuel line and the second fuel line may make the engine hard to start or lead to unstable operating conditions. Further, a

float bowl in the carburetor that must first fill or empty prior to changeover causes delay in cross-over switching between the fuel sources.

Therefore, it would be desirable to design a dual fuel generator having a liquid fuel and gaseous fuel delivery system that overcomes the aforementioned detriments without substantially increasing the overall cost of the system.

BRIEF DESCRIPTION OF THE INVENTION

In accordance with one aspect of the invention, a dual fuel engine includes an engine operable on a gaseous fuel and a liquid fuel. A carburetor attaches to an intake of the engine to mix air and fuel and connect to a gaseous fuel source and a liquid fuel source. The dual fuel engine also includes a switch to change operation of the engine between gaseous fuel and liquid fuel, and a liquid fuel cut-off attaches to the carburetor to interrupt liquid fuel upon actuation of the switch from liquid fuel to gaseous fuel.

In accordance with another aspect of the invention, a batteryless dual fuel generator includes a housing containing a pull start engine coupled to drive an alternator. The engine is operable on a gaseous fuel and a liquid fuel and includes a carburetor attached to an intake of the engine. The carburetor has a throat to mix fuel with air, a float bowl, and a fuel passage to provide liquid fuel from the float bowl to the throat. The generator may also include a switch to select engine operation on either the liquid fuel or the gaseous fuel and a fuel shutoff attached to the carburetor to close the fuel passage upon selection of engine operation to gaseous fuel.

In accordance with yet another aspect of the invention, a carburetor having a fuel shutoff includes a carburetor with a float bowl, a throat, and a fuel passage to provide fuel from the float bowl to the throat. A fuel shutoff couples to the carburetor which may have a first end in the carburetor that actuates to close the fuel passage and a second end external to the carburetor to actuate the first end. The fuel shutoff may operate within the carburetor such that the fuel shutoff actuates free from linear motion when opening and closing the fuel passage.

In accordance with yet another aspect of the invention, a method of assembling a dual fuel engine includes providing an engine operable on a gaseous fuel and a liquid fuel and attaching a carburetor to an intake of the engine to supply the fuels to the engine. The carburetor includes a throat to mix gaseous fuel with air and liquid fuel with air, a float bowl, and a fuel passage to provide liquid fuel from the float bowl to the throat. The fuels may be supplied to the carburetor by a gaseous fuel source coupled to the throat and a liquid fuel source coupled to the float bowl. The method also includes coupling a switch to the engine to change operation of the engine between gaseous fuel and liquid fuel, and attaching a liquid fuel cut-off to the carburetor to close the fuel passage upon actuation of the switch from liquid fuel to gaseous fuel.

Various other features and advantages will be made apparent from the following detailed description and the drawings.

BRIEF DESCRIPTION OF THE DRAWINGS

The drawings illustrate preferred embodiments presently contemplated for carrying out the invention.

In the drawings:

FIG. **1** is a perspective view of a dual fuel generator coupled to a fuel delivery system, according to an embodiment of the invention.

FIG. **2** is a detail view of a portion of the generator of FIG. **1** about a mechanical fuel lockout switch with the switch in a first position, according to an embodiment of the invention.

FIG. **3** is a detail view similar to FIG. **2** and showing the mechanical fuel lockout switch in a second position, with an LPG supply line connected thereto, according to an embodiment of the invention.

FIG. **4**A is a schematic diagram of a fuel system for the dual fuel generator of FIG. **1** showing a liquid fuel source in communication with a carburetor of the generator consistent with the first position of the switch as shown in FIG. **2**, according to an electro-mechanical embodiment of the invention.

FIG. **4**B is a schematic diagram of the fuel system of FIG. **4**A showing a gaseous fuel source in communication with a carburetor of the generator of FIG. **1** consistent with the second position of the switch as shown in FIG. **3**, according to an electro-mechanical embodiment of the invention.

FIG. **5** is a perspective view of a dual fuel carburetor having a manual fuel shutoff system and coupled to a first fuel line and a second fuel line, according to a mechanical embodiment of the invention.

FIG. **6** is cross-sectional view of the carburetor of FIG. **5** taken along line **6-6** of FIG. **5** through a fuel passage that provides fuel from a float bowl to a throat of the carburetor, according to an embodiment of the invention.

FIG. **7**A is a partial sectional view of the float bowl of FIG. **6** with a manual fuel shutoff system in an open position, according to an embodiment of the invention.

FIG. **7**B is a detailed partial sectional view of the float bowl with a manual fuel shutoff of FIG. **7**A taken along line **7**B-**7**B of FIG. **7**A, according to an embodiment of the invention.

FIG. **8** is a partial sectional view similar to FIG. **7**A and showing the manual fuel shutoff system in a closed position, according to an embodiment of the invention.

FIG. **9** is a perspective view of a shaft for the manual fuel shutoff system of FIG. **5**, according to an embodiment of the invention.

FIG. **10** is a side view of a valve member for the manual fuel shutoff system of FIG. **5**, according to an embodiment of the invention.

FIG. **11** is a perspective view of the carburetor of FIG. **5** with the manual fuel shutoff system exploded from a float bowl of the carburetor.

FIG. **12** is a flow chart showing steps in fabricating a manual fuel shutoff system for a carburetor, according to an embodiment of the invention.

FIG. **13** is a magnetic fuel shutoff system for a carburetor, according to a magnetic-mechanical embodiment of the invention.

FIG. **14** is a wiring diagram of a microcontroller receiving input signals and operating engine components, according to an embodiment of the invention.

DETAILED DESCRIPTION OF THE PREFERRED EMBODIMENT

The operating environment of the invention is described with respect to a dual fuel generator. However, it will be appreciated by those skilled in the art that the invention is equally applicable for use with any dual fuel internal combustion engine. Moreover, the invention will be described with respect to a dual fuel generator configured to operate on a liquid fuel and a gaseous fuel. However, one skilled in the art will further appreciate that the invention is equally applicable for use with other fuel combinations for dual fuel generators and internal combustion engines.

Referring to FIG. **1**, a dual fuel generator **20** is coupled to a fuel delivery system **22**, in accordance with an embodiment of the invention. Dual fuel generator **20** includes an internal combustion engine (not shown) within housing **21** at one end **24**, operatively connected to an alternator also enclosed in housing **21** at another end **26**, by conventional means. Dual fuel generator **20** is configured to operate on different fuels via either a first fuel source **28** or a second fuel source **30**. In an exemplary embodiment of the invention, first fuel source **28** is a liquid fuel and second fuel source **30** is a gaseous fuel. The liquid fuel may be gasoline and the gaseous fuel may be liquid petroleum gas (LPG). Each can selectively operate the generator as desired and controlled by an operator. For instance, generator **20** may operate on gasoline for a first period of operation and then switch to LPG for a second period of operation. However, it is contemplated that dual fuel generator **20** is configured to operate on fuels other than gasoline and LPG (e.g., natural gas, biodiesel, etc.), and thus the scope of the invention is not meant to be limited strictly to a dual fuel arrangement where first fuel source **28** provides gasoline and second fuel source **30** provides LPG.

In one embodiment of the invention, dual fuel generator **20** includes a gasoline tank **32** or, generally, a liquid fuel tank, located inside cover **21** onboard generator **20** to provide gasoline to the engine as first fuel source **28**. Gasoline tank **32** connects to a first fuel line to provide gasoline to the carburetor to run the engine, as will later be described with reference to FIGS. **4**A and **4**B. Generator **20** is also coupled to a pressurized fuel container **34**, or a pressurized fuel source, located off board generator **20** to provide LPG to the engine as second fuel source **30**. Pressurized fuel container **34** is coupled to generator **20** with an LPG supply hose **36**. LPG supply hose **36** is coupled to a second fuel line within generator **20** to provide LPG to the carburetor to run the engine. Dual fuel generator **20** includes a mechanical fuel lockout switch **38** for selecting a desired fuel to be provided to the engine. The mechanical fuel lockout switch **38** is actuated to select first fuel source **28** when in a first position, as shown in FIG. **2**, and alternately to select second fuel source **30** when in a second position, as shown in FIG. **3**.

Referring back to FIG. **1**, in an exemplary embodiment, fuel **30** from pressurized fuel container **34** is regulated using a fuel regulator system **39** for delivery to the engine. Fuel regulator system **39** includes one or more pressure regulators that reduce and control the pressure of the fuel from pressurized fuel container **34** and delivers fuel at a desired pressure for operation of the engine. Fuel regulator system **39** has an inlet **41** operatively coupled to a service valve **40** of pressurized fuel container **34** and an outlet **43** coupled to LPG supply hose **36**. Fuel regulator system **39** includes a primary pressure regulator **42** coupled to pressurized fuel container **34** and a secondary pressure regulator **44**. Primary pressure regulator **42** protects downstream components from high pressure of pressurized fuel container **34**. Primary pressure regulator **42** receives LPG through service valve **40** of pressurized fuel container **34** and reduces the pressure of the LPG to a first stage. In one embodiment of the invention, the first stage may be delivered directly to generator **20** at a pressure required for operation of the engine.

In an exemplary embodiment of the invention, fuel regulator system **39** includes secondary pressure regulator **44** coupled to the outlet of primary pressure regulator **42** in order to use standard "off-the-shelf" components. Typically,

the primary pressure regulator is mounted on the LPG tank, while the secondary pressure regulator is mounted on the component using the fuel, such as an engine or grill. Here, since generator **20** can be used as a gasoline only generator, secondary pressure regulator **44** is mounted off-board the generator to reduce size and cost of the generator. Secondary pressure regulator **44** receives LPG from primary pressure regulator **42** and further reduces the pressure of LPG to a second stage to be delivered to generator **20**. In a system with two regulators, primary pressure regulator **42** regulates fuel received from pressurized fuel container **34** and reduces the pressure of the fuel to a level required for operation of secondary pressure regulator **44**. Secondary pressure regulator **44** regulates fuel received from primary pressure regulator **42** and further reduces the pressure of the fuel to a level required for operation of generator **20**. In addition, primary pressure regulator **42** may compensate for varying tank pressure as fuel is depleted while secondary pressure regulator **44** may compensate for varying demand from generator **20**.

In accordance with an exemplary embodiment of the invention, fuel regulator system **39** includes both the primary and secondary regulators, or a custom single regulator, but in any case is located remotely, or off-board, from dual fuel generator **20**. Fuel regulator system **39** may be directly mounted to pressurized fuel container **34** using a regulator mounting bracket **46**. Regulator mounting bracket **46** has mounting locations for primary pressure regulator **42** and secondary pressure regulator **44**. Regulator mounting bracket **46** also has a securing mechanism **48** to secure regulator mounting bracket **46** to pressurized fuel container **34**.

In another embodiment of the invention, primary pressure regulator **42** is mounted on regulator mounting bracket **46** while secondary pressure regulator **44** could be mounted on or near generator **20**. In yet another embodiment of the invention, a dual stage regulator may regulate the fuel received from pressurized fuel container **34** and deliver fuel at a pressure required for operation of generator **20**. Such a dual stage regulator may regulate the fuel to the second stage within a single structure. The dual stage regulator may be mounted directly on fuel container **34**.

Referring to FIG. **2**, a detail view of a portion of generator **20** of FIG. **1** depicts mechanical fuel lockout switch **38** in a first position **38**(*a*), in accordance with an embodiment of the invention. In this position, mechanical fuel lockout switch **38** provides gasoline flow from gasoline tank **32** to the engine while preventing connection of an LPG supply line to fuel inlet **59** of the second fuel line, as will later be discussed in detail with reference to FIGS. **4**A and **4**B. Still referring to FIG. **2**, mechanical fuel lockout switch **38** provides a combination liquid fuel shutoff valve and a gaseous fuel supply lockout that prevents simultaneous delivery of fuel to the engine from gasoline tank **32** and pressurized fuel container **34**, FIG. **1**. As such, mechanical fuel lockout switch **38** provides a fuel selector to ensure only the selected fuel is provided to dual fuel generator **20**.

Mechanical fuel lockout switch **38**, FIG. **2**, includes mechanical fuel valve **54** actuateable between first position **38**(*a*) as shown in FIG. **2** and second position **38**(*b*) as shown in FIG. **3** to selectively control fuel flow to the dual fuel engine from first fuel source **28** through a first fuel line and second fuel source **30** through a second fuel line **36**. Mechanical fuel lockout switch **38** may also include fuel lockout apparatus **58** coupled to mechanical fuel valve **54** to communicate fuel sources individually to generator **20**. In one embodiment of the invention, fuel lockout apparatus **58** communicates first fuel source **28** to the engine by actuating mechanical fuel valve **54** to first position **38**(*a*) to open the first fuel line as shown in FIG. **2**, and communicates second fuel source **30** to the engine by actuating mechanical fuel valve **54** to second position **38**(*b*) to open communication of the second fuel source **30** to the engine as shown in FIG. **3**. Referring back to FIG. **2**, when mechanical fuel valve **54** is in first position **38**(*a*), fuel lockout apparatus **58** communicates first fuel source **28** to the dual fuel engine and prevents communication between the second fuel source and the dual fuel engine.

In an exemplary embodiment of the invention, mechanical fuel valve **54** controls the flow of LPG to the engine by actuating fuel lockout apparatus **58** to block or unblock fuel inlet **59** for the second fuel source. Mechanical fuel valve **54** is coupled to the first fuel line as a liquid fuel valve, as shown in FIGS. **4**A and **4**B, and therefore can control the flow of gasoline to the engine by opening and closing the first fuel line. When the mechanical fuel valve **54**, FIG. **2**, is in the first position **38**(*a*), gasoline flows from the gasoline tank to the engine and the fuel lockout apparatus **58** blocks the fuel inlet **59**. Accordingly, fuel lockout apparatus **58** prevents LPG flow to generator **20** when the mechanical fuel valve **54** is in first position **38**(*a*) wherein the engine is operated on gasoline.

Mechanical fuel valve **54** includes a fuel valve handle **56** to control the opening and closing of the valve. Fuel valve handle **56** is movable between first position **38**(*a*) as shown in FIG. **2** and second position **38**(*b*) as shown in FIG. **3**. Mechanical fuel valve **54** opens the first fuel line (to enable liquid fuel flow to the engine) when fuel valve handle **56** is in the first position, and mechanical fuel valve **54** closes the first fuel line (to prevent liquid fuel flow to the engine) when fuel valve handle **56** is in the second position. Thus, when fuel valve handle **56** is in first position **38**(*a*) as shown in FIG. **2**, mechanical fuel valve **54** opens the first fuel line and allows gasoline from gasoline tank **32** to flow to the engine.

Fuel valve handle **56** is coupled to fuel lockout apparatus **58**. Fuel valve handle **56** actuates with fuel lockout apparatus **58** to prevent LPG flow to generator **20** when gasoline flow to the generator is enabled. Fuel lockout apparatus **58** is controlled by fuel valve handle **56** so that moving fuel valve handle **56** to the first position causes fuel lockout apparatus **58** to block fuel inlet **59** for LPG, and moving fuel valve handle **56** to the second position causes fuel lockout apparatus **58** to unblock fuel inlet **59** for LPG.

In an exemplary embodiment of the invention, fuel valve handle **56** rotates between the first position and the second position and fuel lockout apparatus **58** is rigidly coupled to the rotating handle. Fuel lockout apparatus **58** may include a fuel inlet cover **61**, which may be a flange, coupled to fuel valve handle **56** so that fuel inlet cover **61** rotates with the handle. Fuel inlet cover **61** extends radially outward from fuel valve handle **56** and sweeps over fuel inlet **59** for LPG as fuel valve handle **56** rotates. That is, fuel inlet cover **61** rotates transversely across fuel inlet **59** and blocks access thereto. Accordingly, fuel inlet cover **61** prevents LPG flow to generator **20** when fuel valve handle **56** is in first position **38**(*a*) to allow gasoline to run the engine.

Referring to FIG. **3**, a detail view of a portion of generator **20** of FIG. **1** depicts mechanical fuel lockout switch **38** in a second position **38**(*b*), in accordance with an embodiment of the invention. In this position, mechanical fuel lockout switch **38** provides a disconnect to stop gasoline flow from gasoline tank **32** to the engine while allowing connection of LPG supply hose **36** to fuel inlet **59** of the second fuel line.

FIG. **3** further shows LPG supply hose **36** coupling second fuel source **30** to generator **20** to deliver LPG to run the generator.

Mechanical fuel lockout switch **38** includes mechanical fuel valve **54** coupled to fuel lockout apparatus **58** to prevent gasoline flow to generator **20** when LPG from the LPG supply hose **36** is supplied to the engine. In one embodiment of the invention, actuation of mechanical fuel valve **54** to second position **38**(*b*) causes fuel lockout apparatus **58** to allow communication of second fuel source **30** to the dual fuel engine, and interrupts the first fuel source **28** communication with the dual fuel engine. The position of fuel lockout apparatus **58** prevents the fuel valve handle **56** from moving to first position **38**(*a*) (FIG. **2**) while LPG supply hose **36** is connected to generator **20**.

A quick-disconnect hose coupling **50**, also referred to as a quick-connect hose coupling, connects LPG supply hose **36** to generator **20** so that LPG supply hose **36** may be quickly attached and detached from generator **20**. Hose coupling **50** has a first end **50***a* mounted on the external surface of generator **20** and coupled to supply the second fuel to the engine. Hose coupling **50** has a second end **50***b* coupled to the outlet of LPG supply hose **36**. Each end **50***a*, **50***b* has a gaseous fuel valve that opens when the couplings are engaged and closes when the couplings are disengaged. As such, quick-disconnect hose coupling **50** automatically opens when connected to enable fuel flow from LPG supply hose **36** to the engine. Hose coupling **50** automatically disconnects fluid communication when disconnected. Accordingly, when the supply hose is detached from generator **20**, the coupling **50** is automatically closed so that fuel does not escape and unwanted air does not enter the fuel system.

In one embodiment, fuel inlet cover **61** is coupled to fuel valve handle **56** so that it is spaced apart from the surface of generator **20** to provide clearance for first end **50***a* of the quick-disconnect hose coupling **50** that protrudes from the surface of generator **20**. As shown in FIG. **2**, fuel inlet cover **61** blocks off first end **50***a* of the quick-disconnect hose coupling when fuel valve handle **56** is rotated to first position **38**(*a*) to enable gasoline flow so that fuel inlet cover **61** prevents connection of LPG supply hose **36** (FIG. **3**) to generator **20**. As shown in FIG. **3**, fuel inlet cover **61** uncovers first end **50***a* of the quick-disconnect hose coupling **50** when fuel valve handle **56** is rotated to second position **38**(*b*) to disable gasoline flow so that fuel inlet cover **61** permits connection of LPG supply hose **36** to generator **20**.

To operate generator **20** on LPG, fuel valve handle **56** is turned to second position **38**(*b*) to disable the flow of gasoline to the engine and to expose first end **50***a* of hose coupling **50** on generator **20**. LPG supply hose **36** is then connected to generator **20** via hose coupling **50** to enable the flow of LPG to the engine. To operate generator **20** on gasoline, LPG supply hose **36** is disconnected from generator **20** via hose coupling **50** to disable the flow of LPG to the engine and to unblock fuel valve handle **56** from rotating to the first position. As shown in FIG. **2**, fuel valve handle **56** is then turned to first position **38**(*a*) to enable the flow of gasoline to generator **20**.

Referring to FIG. **4**A, a schematic diagram of a fuel system for a dual fuel engine **60** shows mechanical fuel lockout switch **38** in first position **38**(*a*) to provide communication between the first fuel source **28** and dual fuel carburetor **62**, according to an embodiment of the invention. Mechanical fuel lockout switch **38** prevents communication between second fuel source **30** and dual fuel carburetor **62** when the switch is in first position **38**(*a*). In one embodiment of the invention, first fuel source **28** includes a gasoline tank **32** to provide gasoline to carburetor **62** through a first fuel line **66**, and second fuel source **30** can include a propane or LPG tank **68** to provide propane or LPG to carburetor **62** through a second fuel line **70**. Accordingly, first fuel line **66** may be a liquid fuel line and second fuel line **70** may be a gaseous fuel line.

Mechanical fuel lockout switch **38** changes the fuel source for engine **60** between liquid fuel and gaseous fuel. Mechanical fuel lockout switch **38** includes a mechanical fuel valve **54** actuateable between first position **38**(*a*) as shown in FIG. **4**A and second position **38**(*b*) as shown in FIG. **4**B to selectively control fuel flow to the dual fuel engine **60** from first fuel source **28** through first fuel line **66** and second fuel source **30** through second fuel line **70**. Referring back to FIG. **4**A, mechanical fuel valve **54** selectively controls fuel flow through first fuel line **66** by opening the line when the mechanical fuel lockout switch **38** actuates to first position **38**(*a*). Mechanical fuel valve **54** may be coupled to fuel lockout apparatus **58** that actuates with mechanical fuel valve **54** to block and unblock fuel inlet **59** of second fuel line **70**. First end **50***a* of the quick-disconnect hose coupling is located at fuel inlet **59** and a mating end **50***b* of the quick-disconnect hose coupling is coupled to the propane or LPG tank **68**. Actuation of mechanical fuel valve **54** to first position **38**(*a*) causes fuel lockout apparatus **58** to block fuel inlet **59** to prevent coupling the first end **50***a* and second end **50***b* of the quick-disconnect hose coupling together, and actuation of mechanical fuel valve **54** to another position causes fuel lockout apparatus **58** to unblock fuel inlet **59** to permit attaching first end **50***a* and second end **50***b* together.

A liquid fuel cut-off **72** couples to carburetor **62** to regulate liquid fuel flow through the carburetor. Liquid fuel cut-off **72** can stop liquid fuel flow to engine **60** to prevent an overly rich air-fuel ratio when operating engine **60** on gaseous fuel. Liquid fuel cut-off **72** may attach to carburetor **62** to interrupt liquid fuel upon actuation of mechanical fuel lockout switch **38** from liquid fuel to gaseous fuel. As such, liquid fuel cut-off **72** can prevent engine flooding by stopping liquid fuel flow when starting on gaseous fuel. Liquid fuel cut-off **72** is manually operated in some embodiments of the invention and electrically operated in other embodiments of the invention.

In one embodiment of the invention, liquid fuel cut-off **72** comprises a fuel cut solenoid **74**, also referred to as a carburetor cutoff solenoid, that operates within carburetor **62** as a solenoid valve to control liquid fuel flow to engine **60**. Fuel cut solenoid **74** actuates between an open position to provide liquid fuel to engine **60** and a closed position to stop liquid fuel to the engine. Fuel cut solenoid **74** can operate as a normally open solenoid valve so that power is not required to open the solenoid during liquid fuel operation. As such, fuel cut solenoid **74** is powered and moved to a closed position to stop liquid fuel flow to engine **60** during gaseous fuel operation. Alternatively, fuel cut solenoid **74** may be operated as a normally closed valve that is powered to open for liquid fuel operation.

Fuel cut solenoid **74** is preferably powered by a magneto **76**, alternator, engine flywheel with a charge winding, or other electrical power generator having a charge winding or coil **78**. Charging coil **78** allows operation of fuel cut solenoid **74** in a batteryless engine. In a batteryless dual fuel generator, the charging coil **78** may be integral to an alternator driven by the batteryless engine. Engine **60** may be a pull-start engine having a recoil starter **80**. During engine startup, recoil starter **80** cranks the engine with a

manual pull by a user that causes magneto **76** to supply electrical power to fuel cut solenoid **74**. While a fuel cut solenoid **74** in a normally open mode does not require any initial electrical power for starting engine **60** on liquid fuel, charging coil **78** powers the solenoid to stop liquid fuel flow during startup on gaseous fuel. Alternatively, charging coil **78** can power a fuel cut solenoid **74** operating in a normally closed mode to open and provide liquid fuel to engine **60** during startup on liquid fuel.

Charging coil **78** has an output voltage generally proportional to engine speed and therefore charge coil **78** will produce a range of voltages over the range of engine operating speeds. For example, if charging coil **78** produces 12 VAC at 3600 rpm, it may only produce 1 VAC at 300 rpm which would be insufficient voltage during startup to power a solenoid that requires 12 volts. An alternator typically used to power 12 volt accessories, such as a battery, at engine speeds will need increased output voltage to provide sufficient voltage for operation of fuel cut solenoid **74** at low recoil start speeds. In addition, the output voltage of a charging coil may vary if the alternator or magneto **76** also powers accessories. Accordingly, the output voltage of a charging coil should be verified by running engine **60** through the full range of operating speeds before increasing the output voltage.

Additional turns can be added to a charging coil in the alternator or magneto **76** to increase the output voltage and provide sufficient voltage to activate fuel cut solenoid **74** at manual start speeds. Typical alternators or magnetos may have limited room within stator laminations for additional turns, but low current requirements of fuel cut solenoid **74** allows substitution of smaller gage wire. Alternatively, solenoid windings on fuel cut solenoid **74** can be modified to operate at lower voltages for recoil starting. However, adding coil turns to a charge winding provides an inexpensive modification and allows use of standard 12 volt solenoids.

To protect electrical systems, a voltage regulator **82** couples to charging coil **78** to provide a fixed output voltage for a varying input voltage. If charge winding **78** is wound to supply 12 VAC at 300 rpm, it could supply 144 VAC at 3600 rpm. Applying 144 volts could quickly destroy a solenoid designed to operate at 12 volts. Accordingly, voltage regulator **82** may comprise a switching power supply circuit **84** that regulates a rectified DC power output from magneto **76** and provides a fixed voltage to fuel cut solenoid **74**. Switching circuits are very efficient, dissipate very little power, and can be made small and inexpensive. Switching power supply circuit **84** allows for low rpm, recoil starter electrical power generation with charge coil **78** voltage control over engine speed range.

In the embodiment shown in FIGS. **4**A and **4**B, fuel cut solenoid **74** is operated by an electro-mechanical switch **86**. Electro-mechanical switch **86** connects one fuel source to carburetor **62** and is connected to magneto **76** for a power source. Electro-mechanical switch **86** may comprise an electrical switch **88** that provides electrical connection between fuel cut solenoid **74** and magneto **76**. Electro-mechanical switch **86** may also comprise mechanical fuel lockout switch **38**, and electrical switch **88** can be mechanically actuated and controlled by mechanical fuel lockout switch **38**. Fuel cut solenoid **74** connects to open and close a fuel path to pull-start engine **60** in response to reception of electrical power from electro-mechanical switch **86**.

Fuel cut solenoid **74** can operate as a normally open valve that closes when powered by alternator or magneto **76**. The normally open valve is activated to close and prevent gasoline flow to engine **60** for LPG mode, and deactivated to open and allow gasoline flow to engine **60** for gasoline mode. As such, actuation of mechanical fuel lockout switch **38** to first position **38**(*a*) opens electrical switch **88** to interrupt power and open fuel cut solenoid **74** as represented in FIG. **4**A, and actuation of mechanical fuel lockout switch **38** to second position **38**(*b*) closes electrical switch **88** to power and close fuel cut solenoid **74** as represented in FIG. **4**B. Alternatively, fuel cut solenoid **74** can operate as a normally closed valve where actuation of mechanical fuel lockout switch **38** to first position **38**(*a*) closes electrical switch **88** to power and open fuel cut solenoid **74**, and actuation of mechanical fuel lockout switch **38** to second position **38**(*b*) opens electrical switch **88** to interrupt power and close fuel cut solenoid **74**.

In an alternative embodiment of the invention, a microcontroller **89** operates fuel cut solenoid **74** so that fuel cut solenoid **74** opens to operate engine **60** on gasoline and is closed when the engine operates on LPG. While engine **60** is running, charging coil **78** provides power available to microcontroller **89** for operation of fuel cut solenoid **74**. Fuel cut solenoid **74** may operate in a normally open mode to allow gasoline flow to engine **60** without power from microcontroller **89**, and microcontroller **89** may operate fuel cut solenoid **74** to operate as an after-fire solenoid when shutting down engine **60** from gasoline operation. That is, microcontroller **89** powers fuel cut solenoid **74** to a closed position preventing fuel being drawn into engine **60** and muffler during engine shutdown from operation on gasoline. When engine **60** runs on LPG, microcontroller **89** switches on power to close fuel cut solenoid **74** to prevent engine **60** from drawing in gasoline from the float bowl of carburetor **62** and first fuel line **66**. Microcontroller **89** may also operate fuel cut solenoid **74** configured to be normally closed. Implementation of microcontroller **89** is further described with respect to FIG. **14**.

Referring to FIG. **4**B, a schematic diagram of a fuel system for a dual fuel engine shows mechanical fuel lockout switch **38** in second position **38**(*b*) to provide communication between second fuel source **30** and dual fuel carburetor **62**, according to an embodiment of the invention. Mechanical fuel lockout switch **38** prevents communication between first fuel source **28** and dual fuel carburetor **62** when the switch is in second position **38**(*b*). The dual fuel engine has a first fuel line **66** to provide fuel from first fuel source **28** to carburetor **62** and a second fuel line **70** to provide fuel from second fuel source **30** to carburetor **62**.

Mechanical fuel lockout switch **38** includes mechanical fuel valve **54** that selectively controls fuel flow through first fuel line **66** by closing the line when mechanical fuel lockout switch **38** actuates to second position **38**(*b*). Mechanical fuel lockout switch **38** may also include a mechanical lockout apparatus **58** to block and unblock fuel inlet **59** of the second fuel line **70**. Fuel inlet **59** may include first end **50***a* of the quick-connect hose coupling mounted on the generator and coupled to second fuel line **70**. Second end **50***b* of the quick-connect hose coupling is coupled to the outlet of second fuel source **30**, and the first end **50***a* mates with second end **50***b* to quickly attach propane or LPG tank **68** to second fuel line **70**. Fuel lockout apparatus **58** may also hold mechanical fuel lockout switch **38** in second position **38**(*b*) when the propane or LPG tank **68** is coupled to the engine via the ends **50***a*, **50***b* of the quick-connect hose coupling.

Liquid fuel cut-off **72** couples to carburetor **62** to regulate liquid fuel flow through the carburetor as described with respect to FIG. **4**A. Liquid fuel cut-off **72** may comprise a fuel cut solenoid **74** powered by magneto **76**. Engine **60** has

recoil starter **80** that cranks the engine and drives magneto **76** to power fuel cut solenoid **74** when starting the engine. Voltage regulator **82** reduces the voltage delivered to fuel cut solenoid **74** at higher engine operating speeds. Fuel cut solenoid **74** is activated by electro-mechanical switch **86** providing electrical connection to magneto **76** via electrical switch **88**. Electrical switch **88** can be manually actuated and controlled by mechanical fuel lockout switch **38**. FIG. **4**B shows electrical switch **88** closed to power a normally open configured fuel cut solenoid **74** to a closed position for LPG mode when mechanical fuel lockout switch **38** is in second position **38**(*b*).

FIG. **4**A and FIG. **4**B depict an embodiment where mechanical fuel valve **54** operates along first fuel line **66** to provide a flow path for first fuel source **28** to carburetor **62** when the valve is in first position **38**(*a*). That is, mechanical fuel valve **54** may control a single fuel line that runs through the valve while operating fuel lockout apparatus **58** to control fuel flow through second fuel line **70**. Embodiments of the invention also contemplate mechanical fuel valve **54** configured to operate along second fuel line **70** to provide a flow path for second fuel source **30** to carburetor **62** when the valve is in second position **38**(*b*). Mechanical fuel valve **54** may be configured to control multiple fuel lines that run through the valve according to embodiments of the invention. In another embodiment of the invention, a manual fuel petcock is coupled along second fuel line **70** to provide an independent shut-off from second fuel source **30** to the engine.

Referring to FIG. **5**, a dual fuel carburetor having a manual fuel shutoff system is shown, in accordance with a mechanical embodiment of the invention. Carburetor **62** attaches to an intake **90** of the engine to mix air and fuel and connect to a liquid fuel source and a gaseous fuel source. Carburetor **62** has a mixing passage or throat **92** having an inlet **94** for air and an outlet **96** for an air-fuel mixture. A venturi **98** is located in throat **92** with a choke valve **100** located upstream from the venturi and a throttle valve **102** located downstream from the venturi. Carburetor **62** has a float bowl **104** that provides fuel through a fuel passage into a narrow portion of venturi **98**. Float bowl **104** has a liquid fuel inlet **106** to receive liquid fuel from first fuel source **28**. Throat **92** has a gaseous fuel inlet **108** to receive gaseous fuel from second fuel source **30**. Dual fuel carburetor **62** mixes air with fuel from first fuel source **28** and second fuel source **30** and provides the respective air-fuel mixtures for operation of the dual fuel generator.

Liquid fuel cut-off **72** couples to carburetor **62** to control liquid fuel flow downstream of float bowl **104** in the carburetor. Liquid fuel cut-off **72** can close off float bowl **104** to stop liquid fuel flow to the engine and prevent an overly rich air-fuel ratio during gaseous fuel operation. As such, liquid fuel cut-off **72** prevents engine flooding when starting on gaseous fuel. Liquid fuel cut-off **72** also traps fuel in float bowl **104** to eliminate delay in filling the bowl when starting the engine on liquid fuel, and can stop liquid fuel flow to the engine immediately after ignition shutdown. As such, liquid fuel cut-off **72** reduces emissions and prevents afterfire by stopping the engine from continuing to draw in fuel from float bowl **104** during shutdown.

In the embodiment of FIG. **5**, liquid fuel cut-off **72** comprises a manually operated fuel shutoff **110** coupled to carburetor **62** to control liquid fuel flow downstream of float bowl **104**. Manual fuel shutoff **110** can be cable actuated for use on engines without battery power, for instance engines with recoil starters. Manual fuel shutoff **110** actuates between a first position to allow gasoline flow to the engine, as shown in FIG. **7**A, and a second position to prevent gasoline flow to the engine, as shown in FIG. **8**. Referring back to FIG. **5**, manual fuel shutoff **110** may comprise a shaft **112** extending into carburetor **62** that actuates between the first position and second position. A manually operated control system **114** couples to shaft **112** external to carburetor **62** to control manual fuel shutoff **110**.

A bracket **116** couples to the outer surface of carburetor **62** to support manual control system **114**. Bracket **116** mounts to a boss **118** extending outwards from float bowl **104**. Boss **118** has a flat vertical surface with a pair of tapped holes for mounting bracket **116** to float bowl **104**. Screws **120**, **122** extend through respective holes in bracket **116** and into the tapped holes to mount the bracket to carburetor **62**. Manual fuel shutoff **110** extends out of carburetor **62** and through an opening **124** in bracket **116**. Bracket **116** has a first stopping tab **126** and a second stopping tab **128** extending away from float bowl **104** to hold manual fuel shutoff **110** in a respective open or closed position. A fuel drain screw **130** extends into an opening in carburetor **62** adjacent bracket **116**.

Bracket **116** has a lower arm **132** extending downward and to the air inlet side of carburetor **62**. Lower arm **132** has a bottom portion **134** bent outward from carburetor **62** to couple to a control system spring **136**. Bottom portion **134** has a hole **138** for control system spring **136** adjacent a positioning groove **140** for the spring. Control system spring **136** is held in position by groove **140** as it hooks through hole **138**. Bracket **116** also has an upper arm **142** extending first outward from carburetor **62** and then vertically and to the outlet side of the carburetor. Upper arm **142** has a cable clamp **144** for holding a Bowden cable **146**. Cable clamp **144** has a flat midsection and two curved ends contacting bracket **116** to hold the midsection slightly apart from the bracket. Cable clamp **144** is coupled to bracket **116** by a bolt **148** extending through a hole in the midsection and through upper arm **142** of the bracket.

A lever **150** couples to shaft **112** to actuate manual fuel shutoff **110**. A cap **152** holds lever **150** on shaft **112**. Alternatively, lever **150** may be coupled to the shaft **112** by welding or staking. Lever **150** has a first lever arm **154** to contact and hold lever **150** against first and second stopping tabs **126**, **128** of the bracket. Lever **150** has a second lever arm **156** to actuate shaft **112**. First lever arm **154** is in plane with an opening in the lever for shaft **112** and second lever arm **156** extends first outward from carburetor **62** and then parallel to first lever arm **154**. Second lever arm **156** extends outward from carburetor **62** to provide clearance between bracket **116** and the second lever arm for control system spring **136** and screw **122**. Second lever arm **156** has two holes **158**, **160** for coupling control system spring **136** and Bowden cable **146** to lever **150**.

Manual fuel shutoff **110** operates as a valve within carburetor **62** to selectively interrupt liquid fuel flow to the engine. Control system spring **136** preferably pulls on lever **150** to hold manual fuel shutoff **110** in an open valve position, and Bowden cable **146** pulls lever **150** against control system spring **136** to rotate manual fuel shutoff **110** to a closed valve position. As such, control system spring **136** holds manual fuel shutoff **110** open for gasoline mode until Bowden cable **146** is pulled to close the valve for LPG mode. Alternatively, control system spring **136** can hold manual fuel shutoff **110** in a closed valve position until Bowden cable **146** is pulled to open the valve. Therefore, actuation of the Bowden cable **146** acts as a switch to assist in changeover between the dual fuels. Manual fuel shutoff **110** may rotate 90 degrees between the open and closed positions with stopping tabs **126**, **128** positioned about

bracket **116** accordingly. Lever **150** can be positioned on shaft **112** so that second lever arm **156** is pulled upward by a generally vertical Bowden cable **146**. Second lever arm **156** may actuate between a position 45 degrees below horizontal for an open valve and a position 45 degrees above horizontal for a closed valve. When holding the valve open, control system spring **136** may be oriented at a right angle to second lever arm **156** for increased leverage.

Referring to FIG. **6**, a cross-sectional view of the carburetor taken generally about line **6-6** of FIG. **5** is shown, in accordance with an embodiment of the invention. Carburetor **62** includes a throat **92** to mix gaseous fuel with air and liquid fuel with air. Throat **92** includes a gaseous fuel inlet port **162** in communication with gaseous fuel inlet **108** coupled to a second fuel line **70**. Carburetor **62** also includes float bowl **104** and a fuel passage **164** to provide a liquid fuel path from float bowl **104** through a main nozzle **166** into venturi **98**. Float bowl **104** has a liquid fuel inlet port **168** and a float valve **170** to regulate liquid fuel flow through liquid fuel inlet port **168**. Liquid fuel inlet port **168** is in communication with the liquid fuel inlet **106** coupled to first fuel line **66**.

Manual fuel shutoff **110** couples to carburetor **62** to regulate liquid fuel flow downstream of float bowl **104**. Manual fuel shutoff **110** attaches to carburetor **62** to close fuel passage **164** upon selection of engine operation to gaseous fuel. Manual fuel shutoff **110** may have a first end **172** positioned in carburetor **62** adjacent an inlet port **174** to fuel passage **164**, and the first end **172** actuates to close fuel passage **164**. That is, first end **172** actuates between a first position to permit fuel flow into fuel passage **164**, as shown in FIG. **7**A, and a second position to prevent fuel flow into fuel passage **164**, as shown in FIG. **8**.

Referring back to FIG. **6**, manual fuel shutoff **110** has a second end **176** positioned external to carburetor **62** that is manually actuated to operate manual fuel shutoff **110**. Manual fuel shutoff **110** may have a rotating shaft **112** that extends through an opening **178** in carburetor **62**. A blocking member or valve tip **180** couples to shaft **112** in carburetor **62** to create a valve-shaft assembly **179**. Valve tip **180** rotates parallel to inlet **174** of fuel passage **164** between a blocking position and non-blocking position to selectively block fuel flow into fuel passage **164**. Lever **150** couples to shaft **112** external to carburetor **62** and actuates to rotate shaft **112** and valve tip **180**.

Shaft **112** may be horizontal or substantially horizontal to allow valve tip **180** to be positioned directly in float bowl **104** adjacent inlet port **174** of fuel passage **164**. That is, manual fuel shutoff **110** may be coupled to carburetor **62** such that second end **176** is horizontal from first end **172**. Inlet **174** of fuel passage **164** can face horizontal or substantially horizontal to accommodate valve tip **180** in float bowl **104**. As such, fuel passage **164** may have a horizontal component that receives fuel from float bowl **104** leading to a vertical component to provide fuel to venturi **98**. The interior surface of the float bowl **104** may also have a recess or cavity **182** to provide room for valve member **180** in the bowl.

Opening **178** in carburetor **62** has a plug **184** to hold shaft **112** and prevent fuel flow out of the carburetor. Shaft **112** extends through a hole **186** in plug **184** and hole **186** is positioned to align valve tip **180** with fuel passage **164**. Plug **184** has a larger outer diameter **188** toward the external side of carburetor **62** and a smaller outer diameter **190** toward the internal side. Larger outer diameter **188** and smaller outer diameter **190** mate with corresponding diameters of opening **178**. Plug **184** has a counterbore **192** to hole **186** on the external side of the plug. A compression spring **194** is positioned around shaft **112** in float bowl **104** to push valve tip **180** against plug **184**. Compression spring **194** holds valve tip **180** against inlet **174** of fuel passage **164** in order to seal the fuel passage.

A primary o-ring **196** and a secondary o-ring **198** are positioned around shaft **112** to provide a respective first and second fuel seal between the shaft and plug **184** and to seal first end **172** of manual fuel shutoff **110** in carburetor **62**. Primary o-ring **196** may be positioned in an o-ring groove **200** in shaft **112** and secondary o-ring **198** may be positioned in counterbore **192** of plug **184**. A bracket **116** or other support member mounts over counterbore **192** and around shaft **112** to hold secondary o-ring **198** in counterbore **192**. Bracket **116** has an opening **124** large enough for shaft **112** but small enough to hold secondary o-ring **198** in counterbore **192**. Manual fuel shutoff **110** actuates in a rotative motion free from linear motion in part to ensure fuel will not leak through primary o-ring **196** or secondary o-ring **198**. Compared to a sliding valve, a rotating valve, such as manual fuel shutoff **110**, reduces the likelihood that fuel will leak from carburetor **62**.

Liquid fuel cut-off **72** may regulate fuel flow through multiple fuel passages in carburetor **62** that provide fuel from float bowl **104** to the engine. For instance, carburetor **62** may have a main fuel circuit **202** and an idle fuel circuit **204**. Main fuel circuit **202** provides fuel through main nozzle **166** into a narrow portion of venturi **98**. Idle fuel circuit **204** provides fuel to throat **92** downstream from the throttle valve. Liquid fuel cut-off **72** may regulate fuel flow through some or all of the fuel circuits that provide fuel from float bowl **104** to the engine. FIG. **6** shows an embodiment where idle fuel circuit **204** branches off from main fuel circuit **202** and liquid fuel cut-off **72** actuates to block fuel flow into both main fuel circuit **202** and idle fuel circuit **204**. In other embodiments, liquid fuel cut-off **72** closes main fuel circuit **202** while small amounts of liquid fuel pass through idle fuel circuit **204**. Fuel passing through idle fuel circuit **204** may not negatively affect engine performance during LPG operation but will eventually drain the gasoline tank.

Referring to FIG. **7**A, a partial sectional view of a float bowl shows a manual fuel shutoff system in an open position for gasoline mode, in accordance with an embodiment of the invention. The partial sectional view is taken through a portion of float bowl **104** along fuel passage **164** while showing another portion of float bowl **104** in front of fuel passage **164** and coupled to manual fuel shutoff **110**. Inlet **174** to fuel passage **164** is in a boss **206** extending outward from a central region of float bowl **104**. Boss **206** has an oval top with sides that extend to the floor of float bowl **104**. Inlet **174** to fuel passage **164** extends through boss **206** and has a substantially flat perimeter edge **208** around inlet port **174** on the surface of the boss. Manual fuel shutoff **110** presses against substantially flat perimeter edge **208** surrounding fuel passage **164** to block fuel flow into fuel passage **164**.

Manual fuel shutoff **110** may have a rotating shaft **112** extending through an aperture **178** in float bowl **104**. Shaft **112** has a first end **210** coupled to valve tip **180** and located in float bowl **104** that is held against inlet port **174** to fuel passage **164**. Shaft **112** rotates valve tip **180** against inlet port **174** between a first position **180**(*a*) allowing fuel flow through the inlet port **174**, as shown in FIG. **7**A, and a second position **180**(*b*) blocking fuel flow through the inlet port **174**, as shown in FIG. **8**. That is, valve tip **180** uncovers the inlet **174** of fuel passage **164** to permit fuel flow into the inlet **174** when rotated to first position **180**(*a*), FIG. **7**A, and

covers inlet **174** of fuel passage **164** to prevent fuel flow into inlet **174** when rotated to second position **180**(*b*), FIG. **8**.

Referring back to FIG. **7**A, the manual fuel shutoff system further includes bracket **116** to support shaft **112** in float bowl **104** and provide mounting locations for manually operated control system **114**. Bracket **116** also has a pair of stopping tabs **126**, **128** to hold the manual fuel shutoff **110** in an open or closed position. Shaft **112** extends through bracket **116** and lever **150** couples to a second end **212** of shaft **112** located outside of float bowl **104**. Control system spring **136** couples lever **150** to bracket **116** to hold lever **150** against stopping tab **126** and hold manual fuel shutoff **110** in the open position for gasoline mode. Bowden cable **146** couples to lever **150** to pull against control system spring **136** and rotate manual fuel shutoff **110** to the closed position for LPG mode. As such, second end **176** of manual fuel shutoff **110** is positioned external to float bowl **104** and coupled to manually operated control system **114** to operate manual fuel shutoff **110**.

Referring to FIG. **7**B, a detailed partial sectional view of the float bowl of FIG. **7**A taken along line **7**B-**7**B shows a manual fuel shutoff in an open position for gasoline mode, in accordance with an embodiment of the invention. Float bowl **104** includes boss **206** through which fuel passage **164** extends and having a substantially flat perimeter edge **208** surrounding inlet **174** to fuel passage **164**. Substantially flat perimeter edge **208** preferably has a flat finished surface for improved sealing against valve tip **180**. Valve tip **180** maintains planar contact with substantially flat perimeter edge **208** while rotating between an open position permitting fuel flow into inlet **174** and a closed position blocking fuel flow into inlet **174**. As such, valve tip **180** rotates parallel to inlet **174** of fuel passage **164** between the open or first position **180**(*a*) and closed or second position **180**(*b*), FIG. **8**.

Referring again to FIG. **7**B, valve tip **180** may comprise an oval or stadium **214** having a flat surface **216** that contacts perimeter edge **208** around inlet **174** of fuel passage **164**. Valve tip **180** may have a recessed portion or cutout **218** in the flat surface **216** to provide a flow passage through the valve tip. Fuel flows through the cutout **218** into the inlet **174** of fuel passage **164** when cutout **218** is aligned with inlet **174**. That is, cutout **218** in valve tip **180** aligns with inlet port **174** when valve tip **180** is rotated to the open position such that fuel can pass from float bowl **104** through cutout **218** into fuel passage **164**. Cutout **218** in valve tip **180** is strategically positioned in a narrow portion of stadium **214** so a long portion of stadium **214** can be rotated to cover and block inlet **174**. Valve tip **180** may comprise one of many shapes including a stadium, an oval, a disk, a rectangle, an irregular shape, among others.

Referring to FIG. **8**, a partial sectional view of a float bowl shows a manual fuel shutoff system in a closed position for LPG mode, in accordance with an embodiment of the invention. Valve tip **180** pushes against inlet **174** to fuel passage **164** to seal the inlet when in second position **180**(*b*). Valve tip **180** may have a stadium shape **214** with a cutout **218** in the narrow portion of the stadium to provide a flow passage. Valve tip **180** blocks fuel flow into fuel passage **164** when the cutout **218** in valve tip **180** is rotated away from inlet **174** of fuel passage **164**. Cutout **218** may face downward when in the closed position and horizontal when in the open position. Lever **150** couples to shaft **112** outside of float bowl **104** and is actuated by Bowden cable **146** to operate manual fuel shutoff **110**.

Bowden cable **146** may be coupled to mechanical fuel lockout switch **38**, FIG. **1**, to automatically open and close manual fuel shutoff **110** upon selection of a corresponding fuel source. Mechanical fuel lockout switch **38** may have a lever arm inside of the generator housing for actuating Bowden cable **146**, FIG. **8**. Alternatively, Bowden cable **146** may have a push-pull knob located on an external surface of the generator housing to independently actuate manual fuel shutoff **110**. In either case, manual fuel shutoff **110** can attach to the carburetor to close fuel passage **164** downstream from float bowl **104** upon actuation of the mechanical fuel lockout switch **38**, FIG. **1**, from liquid fuel to gaseous fuel.

Referring to FIG. **9**, a perspective view of a shaft for the manual fuel shutoff system of FIGS. **5**-**8** is shown, in accordance with an embodiment of the invention. Shaft **112** has two "D" shaped ends each located at a respective first end **210** and second end **212** of the shaft. Shaft **112** also has a first diameter **220** and a larger second diameter **222** each extending radially from shaft **112** outward beyond the two "D" shaped ends. First diameter **220** and second diameter **222** are separated by o-ring groove **200** with first diameter **220** toward first end **210** of shaft **112** and second diameter **222** toward second end **212** of shaft **112**. First diameter **220** also has a groove **224** for a retaining ring. Lever **150**, FIG. **8**, has a "D" shaped opening to fit on the second end **212** of shaft **112** and held against the second diameter **222**.

Referring to FIG. **10**, a side view of a valve member for the manual fuel shutoff system of FIG. **5**-**8** is shown, in accordance with an embodiment of the invention. Valve tip **180** has a flat surface **216** to seal and rotate against a mating surface in the carburetor. Valve tip **180** is preferably made from polyoxymethylene (POM) or other thermoplastic material to provide a surface suitable for sealing. Valve tip **180** may be shaped as a stadium **214** with a short direction **226** and a long direction **228** extending from a center of rotation **230**. The long direction **228** rotates over inlet **174**, FIG. **8**, to selectively block fuel passage **164**. As such, valve tip **180** may rotate less than 360 degrees between the open and closed positions, and valve tip **180** rotates substantially 90 degrees between the positions in an exemplary embodiment of the invention.

Referring back to FIG. **10**, cutout **218** may be located along a straight side of stadium **214** to create a flow passage through valve tip **180**. Cutout **218** may have a depth less than the thickness of stadium **214** or may extend through the thickness of the stadium. Cutout **218** may be a half circle with tangent side components extending perpendicular to a straight edge of stadium **214**, through a side of valve tip **180**. Cutout **218** may extend into valve tip **180** short of the center of stadium **214** and positioned slightly offset along the length of the stadium from the stadium center.

Valve tip **180** may have a "D" shaped opening **232** to press onto shaft **112** of FIG. **9**, defining center of rotation **230**, FIG. **10**. Center of rotation **230** may be equal distance from straight edges of stadium **214** and positioned between cutout **218** and a rounded end of the stadium that is the closest rounded end to the cutout. Cutout **218** is askew from center of rotation **230** along the length of stadium **214** in part to cover more distance when rotated away from inlet port **174**, FIG. **8**. In addition, valve tip **180** is positioned off center on shaft **112** to increase the length of long direction **228** from center of rotation **230** that is rotated to cover inlet port **174**.

Referring to FIG. **11**, a perspective view of the carburetor of FIG. **5** with the manual fuel shutoff system exploded from a float bowl of the carburetor is shown, in accordance with an embodiment of the invention. Carburetor **62** has a throat **92**, a float bowl **104**, and a fuel passage **164** from float bowl

104 to an outlet port 234 in throat 92. Manual fuel shutoff 110 includes shaft 112 having first end 210 to be positioned in float bowl 104 and a second end 212 to be positioned external to float bowl 104. A primary o-ring 196 installs on shaft 112 and positioned in an o-ring groove 200 in shaft 112. A retaining ring 236 installs on shaft 112 in a groove 224 toward first end 210 from o-ring groove 200. Compression spring 194 installs on shaft 112 followed by valve tip 180 pressed onto first end 210 of shaft 112 creating a valve-shaft assembly 179. Orientation of valve tip 180 is controlled by a "D" shaped hole 232 in valve tip 180 mating with a "D" shaped end of shaft 112.

Plug 184 installs on shaft 112 pushing compression spring 194 against valve tip 180. Primary o-ring 196 seals between shaft 112 and plug 184. Valve-shaft assembly 179 inserts through opening 178 in float bowl 104 and plug 184 presses into the opening. Plug 184 anchors in opening 178 so that compression spring 194 holds valve tip 180 against fuel passage 164. Secondary o-ring 198 installs around shaft 112 to seal between the shaft and plug 184. Secondary o-ring 198 may be positioned in a counterbore 192 in plug 184. Bracket 116 couples to float bowl 104 and holds secondary o-ring 198 positioned in counterbore 192. Bracket 116 may be 2.0 mm thick and stamped from Q235 grade steel. A pair of screws 120, 122 each having a spring lock washer 238, 240 extend through a respective hole 242, 244 in bracket 116 to mount bracket 116 to carburetor 62. Screws 120, 122 may be M5 screws. A spacer 246 installs on shaft 112 and against bracket 116.

Lever 150 couples to shaft 112 and held apart from bracket 116 by spacer 246. Shaft 112 has a "D" shape at second end 212 that is inserted into a corresponding "D" shaped opening 248 in lever 150. The orientation of lever 150 is controlled by "D" shape hole 248 in lever 150 mating with a "D" shape end of shaft 112. Lever 150 may be 1.5 mm thick and stamped from Q235 grade steel. Cap 152 presses onto shaft 112 to hold lever 150 on shaft 112. Control system spring 136 attaches to lever 150 and bracket 116 to hold manual fuel shutoff 110 open. Cable clamp 144 couples to bracket 116 by bolt 148. Cable clamp 144 has a tab 250 at one or both ends that fits into a corresponding slot or recess 252 in bracket 116. Cable clamp 144 also has a midsection with a notch 254 to pinch and hold Bowden cable 146 to bracket 116. Bowden cable 146 is held by cable clamp 144 and attaches to lever 150 to actuate manual fuel shutoff 110 to the closed position. Fuel drain screw 130 and drain screw spring 256 insert into carburetor 62. In one embodiment, drain screw spring 256 is the same type of spring used for compression spring 194.

Referring to FIG. 12, and with continued reference back to FIG. 11, a method of fabricating a manual fuel shutoff system for a carburetor is shown, in accordance with an embodiment of the invention. Process 300 begins by providing carburetor 62 at STEP 302. Process 300 continues with making a valve-shaft assembly 179 at STEP 304, with valve tip 180 pressed onto shaft 112. Also in STEP 304, a compression spring 194 is stalled on shaft 112 and primary o-ring 196 is installed around shaft 112. Process 300 continues by installing plug 184 on valve-shaft assembly 179 at STEP 306. Next, valve-shaft assembly 179 is inserted through opening 178 in float bowl 104 and plug 184 is pressed into the opening at STEP 308. Process 300 continues at STEP 310 by installing secondary o-ring 198 in a groove on plug 184. Next, bracket 116 is coupled to float bowl 104 of carburetor 62 in STEP 312. Process 300 continues at STEP 314 by installing lever 150 on shaft 112. Next, cap 152 is pressed onto shaft 112 to hold lever 150 to shaft 112 in STEP 316. In STEP 318, control system spring 136 is installed on lever 150 and bracket 116. Also, in STEP 318, Bowden cable 146 is attached to lever 150 to actuate shaft 112.

Referring to FIG. 13, a magnetic fuel shutoff system for a carburetor is shown, in accordance with an embodiment of the invention. Magnetic fuel shutoff system 320 couples to the carburetor to provide a magnetically actuated liquid fuel cut-off for the internal combustion engine. Magnetic fuel shutoff system 320 controls liquid fuel flow through a fuel passage leading from the float bowl to the throat in the carburetor. Magnetic fuel shutoff system 320 can be manually actuated between an open position to allow gasoline flow to the engine for gasoline operation and a closed position to prevent gasoline flow to the engine for LPG operation.

Magnetic fuel shutoff system 320 includes a housing at least partially enclosing the liquid fuel cut-off. That is, magnetic fuel shutoff system 320 has a first section 322 housing magnetic fuel shutoff 324 and a second section 326 housing a manually actuated magnet 328 to operate the magnetic fuel shutoff. First section 322 has a forward wall 330 and a back wall 332 with the forward wall facing internal to the carburetor. Forward wall 330 has a flange 334 around an outer perimeter for coupling to the carburetor. Forward wall 330 also has an opening 336 through which a plunger 342 of the magnetic fuel shutoff 324 extends into the carburetor. A lip 338 extends forward from forward wall 330 around opening 336 and an o-ring 340 is installed around lip 338. Flange 334 may be mounted to a plug in an opening of the carburetor with magnetic fuel shutoff 324 entering the carburetor through a hole in the plug.

First section 322 provides a sealing member enclosing plunger 342 of magnetic fuel shutoff 324 to the carburetor and holding fuel in the carburetor. The plunger 342 extends through opening 336 in forward wall 330 with a pointed end that is selectively inserted into a fuel supply path in the carburetor to block fuel flow downstream from the float bowl. Magnetic fuel shutoff 324 has a back plate 344 coupled to plunger 342 in first section 322. Plunger 342 extends perpendicular from a forward face of back plate 344. A spring 346 pushes a back face of back plate 344 against back wall 332 to push plunger 342 through opening 336 in forward wall 330 to block the fuel supply path in the carburetor. Accordingly, the first section 322 holds the spring 346 against the plunger 342. Magnetic fuel shutoff 324 is guided through its actuation by back plate 344 sliding through first section 322 and plunger 342 through opening 336 in forward wall 330.

Second section 326 couples to first section 322 and is located behind back wall 332. Second section 326 encloses an actuating magnet 328 to selectively pull magnetic fuel shutoff 324 against spring 346. Second section 326 preferably guides actuating magnet 328 along a path perpendicular to that of magnetic fuel shutoff 324. As such, the magnetic force to pull magnetic fuel shutoff 324 to an open valve position is the strongest when actuating magnet 328 is aligned with the path of magnetic fuel shutoff 324. Actuating magnet 328 pulls magnetic fuel shutoff 324 against spring 346 when actuating magnet 328 approaches magnetic fuel shutoff 324 and releases magnetic fuel shutoff 324 while traveling away from magnetic fuel shutoff 324. Actuating magnet 328 may comprise a rare-earth or other permanent magnet.

In an exemplary embodiment of the invention, magnetic fuel shutoff 324 actuates horizontally between an open position to permit fuel flow into a fuel passage in the

carburetor and a closed positioned to prevent fuel flow into the fuel passage. Actuating magnet **328** preferably follows a vertical path and a spring **348** couples to a top of second section **326** pushing downward on actuating magnet **328**. Bowden cable **146** couples to the top of second section **326** and to actuating magnet **328** to pull the magnet vertically against spring **348** and operate magnetic fuel shutoff system **320**.

Referring now to FIG. **14**, a wiring diagram of a microcontroller **89** receiving input signals and operating engine components is shown, according to an embodiment of the invention. Microcontroller **89** closes fuel cut solenoid **74** when the engine operates on LPG and opens the fuel cut solenoid to operate the engine on gasoline. For LPG mode, microcontroller **89** switches on power to fuel cut solenoid **74** to close the solenoid preventing the engine from drawing in gasoline from the float bowl of the carburetor. During shutdown from gasoline operation, microcontroller **89** can also power fuel cut solenoid **74** to a closed position preventing additional gasoline being drawn into the engine. While microcontroller **89** can operate fuel cut solenoid **74** operating in a normally open configuration, microcontroller **89** can also operate a fuel cut solenoid operating in a normally closed configuration.

Microcontroller **89** may include a module **350** to connect fuel cut solenoid **74**, charging coil **78**, switches and a ground terminal. Module **350** has a first connection **352**(*a*) to couple fuel cut solenoid **74** and a second connection **352**(*b*) to couple charging coil **78** to power the fuel cut solenoid. Fuel cut solenoid **74** may be coupled to a fuel switch **354** and a combination switch **356** that are also connected to module **350** via a third connection **352**(*c*). Fuel switch **354** changes operation of the engine between LPG and gasoline, and combination switch **356** can operate to kill the engine. A ground terminal **358** connects to module **350** via a fourth connection **352**(*d*) in order to ground fuel cut solenoid **74** via fuel switch **354** or combination switch **356**.

In LPG mode, fuel switch **354** connects a first contact **360**(*a*) to a second contact **360**(*b*), instead of third contact **360**(*c*), to complete an electrical circuit for fuel cut solenoid **74** by connecting the fuel cut solenoid to ground terminal **358**. A fuel cut solenoid **74** operating in a normally open configuration is therefore powered and closed to prevent gasoline flow from the fuel bowl of the carburetor to the engine. Fuel switch **354** also connects a fourth contact **360**(*d*) to a fifth contact **360**(*e*), instead of sixth contact **360**(*f*), to prevent combination switch **356** from grounding magneto **76** thereby maintaining power to spark plug **362**.

In gasoline mode, fuel switch **354** connects first contact **360**(*a*) to third contact **360**(*c*) to interrupt an electrical circuit for fuel cut solenoid **74** by disconnecting the fuel cut solenoid from ground terminal **358**. A fuel cut solenoid **74** operating in a normally open configuration is therefore unpowered and opened to allow gasoline flow from the fuel bowl of the carburetor to the engine. Fuel switch **354** also connects fourth contact **360**(*d*) to sixth contact **360**(*f*) to allow combination switch **356** to ground magneto **76** upon shutdown thereby interrupting power to spark plug **362**.

Combination switch **356** can actuate fuel cut solenoid **74** upon engine shutdown from gasoline operation to prevent after-fire. That is, combination switch **356** connects a first point **364**(*a*) to a second point **364**(*b*) to kill the engine by connecting magneto **76** to ground terminal **358**. At the same time, combination switch **356** connects a third point **364**(*c*) to a fourth point **364**(*d*) completing an electrical circuit for fuel cut solenoid **74** by connecting the solenoid to ground terminal **358**. Fuel cut solenoid **74** is then powered and closed to prevent continued gasoline flow to the engine after combination switch **356** stops power supply to spark plug **362**.

In one embodiment of the invention, combination switch **356** can operate as a kill switch only for gasoline operation. That is, combination switch **356** can be decoupled from magneto **76** by fuel switch **354** so that combination switch **356** cannot be actuated to shut down the engine during LPG operation. In another embodiment of the invention, combination switch **356** can operate as a kill switch for both gasoline operation and LPG operation. During LPG operation, combination switch **356** may actuate fuel switch **354** with actuation of combination switch **356** to ground magneto **76** and kill the engine. That is, combination switch **356** connects first point **364**(*a*) to second point **364**(*b*) and also actuates fuel switch **354** to connect fourth contact **360**(*d*) to sixth contact **360**(*f*) so that magneto **76** is coupled to ground terminal **358** killing the engine. At the same time, combination switch **356** connects third point **364**(*c*) to fourth point **364**(*d*) so that fuel cut solenoid **74** maintains connection to ground terminal **358** to remain closed even though fuel switch **354** interrupts connection between first contact **360**(*a*) and second contact **360**(*b*).

Microcontroller **89** may also include a Voltage Frequency and Low Oil Shutdown (VFO) module **366**. VFO module **366** can measure parameters of an alternator driven by an engine in a generator. VFO module **366** monitors alternator voltage and frequency by receiving an input signal **368** from the alternator. Input signal **368** is 120 VAC and 60 Hz from the alternator as a monitoring point for VFO module **366**. VFO module **366** allows the engine to run if alternator parameters are within preset limits and shuts down the engine if the parameters are outside the limits. VFO module **366** can also monitor oil volume within the engine by receiving an input signal from an oil level switch **370** shown in the wiring diagram engine block **372**. VFO module **366** may allow the engine to operate only if the oil volume is greater than a preset lower limit and can shutdown the engine by initiating connection between the ignition coil or magneto **76** and ground terminal **358**.

Beneficially, embodiments of the invention provide for a fuel lockout switch to ensure that two fuels are not simultaneously delivered to a dual fuel internal combustion engine and to efficiently convert operation of the engine between the fuel sources. Embodiments of the invention also provide for a dual fuel generator with a remotely mounted gaseous fuel regulator system. Embodiments of the invention also provide for a batteryless dual fuel internal combustion engine having a liquid fuel cut-off coupled to a carburetor to selectively interrupt liquid fuel.

Therefore, according to one embodiment of the invention, a dual fuel engine includes an engine operable on a gaseous fuel and a liquid fuel and a switch to change operation of the engine between gaseous fuel and liquid fuel. The dual fuel engine also includes a carburetor attached to an intake of the engine to mix air and fuel and connect to a gaseous fuel source and a liquid fuel source. A liquid fuel cut-off attaches to the carburetor to interrupt liquid fuel upon actuation of the switch from liquid fuel to gaseous fuel.

According to another embodiment of the invention, a batteryless dual fuel generator includes a housing containing a pull start engine coupled to drive an alternator, the engine operable on a gaseous fuel and a liquid fuel. A carburetor attaches to an intake of the engine and includes a throat to mix fuel with air, a float bowl, and a fuel passage to provide liquid fuel from the float bowl to the throat. The generator

also includes a fuel shutoff attached to the carburetor to close the fuel passage upon selection of engine operation to gaseous fuel.

According to yet another embodiment of the invention, a carburetor having a fuel shutoff includes a carburetor with a float bowl, a throat, and a fuel passage to provide fuel from the float bowl to the throat. The carburetor further includes a fuel shutoff coupled to the carburetor having a first end in the carburetor that actuates to close the fuel passage and a second end external to the carburetor to actuate the first end, and the fuel shutoff can actuate free from linear motion.

According to yet another embodiment of the invention, a method of assembling a dual fuel engine includes providing an engine operable on a gaseous fuel and a liquid fuel. The method also includes attaching a carburetor to an intake of the engine, the carburetor includes a throat to mix gaseous fuel with air and liquid fuel with air, a float bowl, and a fuel passage to provide liquid fuel from the float bowl to the throat. The method also includes coupling a switch to the engine to change operation of the engine between gaseous fuel and liquid fuel and attaching a liquid fuel cut-off to the carburetor to close the fuel passage upon actuation of the switch from liquid fuel to gaseous fuel.

This written description uses examples to disclose the invention, including the best mode, and also to enable any person skilled in the art to practice the invention, including making and using any devices or systems and performing any incorporated methods. The patentable scope of the invention is defined by the claims, and may include other examples that occur to those skilled in the art. Such other examples are intended to be within the scope of the claims if they have structural elements that do not differ from the literal language of the claims, or if they include equivalent structural elements with insubstantial differences from the literal languages of the claims.

What is claimed is:

1. A dual fuel generator comprising:

an engine operable on a gaseous fuel and a liquid fuel;

an electrical power generator driven by the engine and comprising a charging coil;

a switch to change operation of the engine between gaseous fuel and liquid fuel;

a carburetor attached to an intake of the engine to mix air and fuel and connect to a gaseous fuel source and a liquid fuel source;

a liquid fuel cut-off solenoid to interrupt liquid fuel flow to the engine upon actuation of the switch from liquid fuel to gaseous fuel; and

a voltage regulator coupled to the charging coil to receive power therefrom and that operates to provide a regulated voltage to the liquid fuel cut-off solenoid.

2. The dual fuel generator of claim **1** further comprising:

a liquid fuel valve along a liquid fuel line coupling the liquid fuel source to the carburetor; and

a gaseous fuel valve along a gaseous fuel line coupling the gaseous fuel source to the carburetor.

3. The dual fuel generator of claim **2**, wherein each of the liquid fuel valve and the gaseous fuel valve comprises a mechanical valve.

4. The dual fuel generator of claim **2**, wherein the liquid fuel cut-off solenoid is attached to the carburetor.

5. The dual fuel generator of claim **1**, wherein the gaseous fuel is LPG and the liquid fuel is gasoline.

6. The dual fuel generator of claim **1**, wherein the switch is an electro-mechanical switch connecting one fuel source to the carburetor and connected to the electrical power generator, and wherein the liquid fuel cut-off solenoid is connected to open and close a fuel path to the engine in response to reception of electrical power from the switch.

7. The dual fuel generator of claim **6**, wherein the switch selectively powers the solenoid valve by controlling electrical connection between the solenoid valve and the electrical power generator.

8. The dual fuel generator of claim **1**, wherein the liquid fuel cut-off solenoid is normally open to provide liquid fuel to the engine when the liquid fuel cut-off solenoid is unpowered.

9. The dual fuel generator of claim **8**, wherein the dual fuel generator is a batteryless dual fuel generator and the engine is a pull-start engine, the batteryless dual fuel generator further comprising a pull-starter that drives the electrical power generator to power and close the liquid fuel cut-off solenoid while starting the engine on gaseous fuel.

10. The dual fuel generator of claim **1**, wherein the electrical power generator comprises a magneto or an alternator.

11. A dual fuel generator comprising:

an engine operable on a gaseous fuel and a liquid fuel;

a carburetor attached to an intake of the engine to mix air and fuel and connect to a gaseous fuel source and a liquid fuel source; and

a manually actuated fuel shutoff coupled to the carburetor, the manually actuated fuel shutoff comprising:

a first end in the carburetor that actuates to selectively allow or block a flow of fuel through the carburetor; and

and a second end external to the carburetor to actuate the first end.

12. The dual fuel generator of claim **11**, wherein the engine is a pull start, batteryless engine.

13. The dual fuel generator of claim **11**, wherein the gaseous fuel is LPG and the liquid fuel is gasoline.

14. The dual fuel generator of claim **11** wherein the manually actuated fuel shutoff comprises a rotating mechanical valve.

15. The dual fuel generator of claim **14** wherein the carburetor comprises:

a float bowl;

a throat; and

a fuel passage to provide fuel from the float bowl to the throat;

wherein the manually actuated fuel shutoff comprises a shaft extending into the carburetor through an aperture in the float bowl, the shaft being coupled to a valve tip in the float bowl that rotates to open and close the fuel passage.

16. The dual fuel generator of claim **15** wherein the valve tip rotates parallel to an inlet of the fuel passage between a first position permitting fuel flow into the inlet and a second position blocking fuel flow into the inlet.

17. The dual fuel generator of claim **15**, wherein the fuel passage has an inlet with a substantially flat perimeter edge and the valve tip maintains planar contact with the perimeter edge while rotating to open and close the fuel passage.

18. The dual fuel generator of claim **17** further comprising:

a plug in the aperture around the shaft; and

a compression spring around the shaft in the float bowl pushing against the plug to hold the valve tip against the perimeter edge of the inlet.

19. The dual fuel generator of claim **15** further comprising:

a lever coupled to the shaft outside of the carburetor;

a spring coupled to the lever to hold the fuel shutoff opening the fuel passage; and

a cable coupled to the lever to move the lever against the spring and rotate the fuel shutoff to close the fuel passage.

* * * * *