US005161496A

United States Patent [19]

Matsushima et al.

[11] Patent Number: 5,161,496

[45] Date of Patent: Nov. 10, 1992

[54] FUEL INJECTION SYSTEM FOR INTERNAL COMBUSTION ENGINES

[75] Inventors: Seiya Matsushima; Yukio Sugimoto; Ryuichi Kimata; Ryhei Tamamoto; Megumi Tanaka, all of Wako, Japan

[73] Assignee: Honda Giken Kogyo Kabushiki Kaisha

[21] Appl. No.: 713,133

[22] Filed: Jun. 10, 1991

[30] Foreign Application Priority Data

Jun. 11, 1990 [JP] Japan 2-153182

[51] Int. Cl.[5] F02N 5/02; F02M 37/04; F02P 1/02

[52] U.S. Cl. ..... 123/185.3; 123/508; 123/599; 123/149 D; 123/478

[58] Field of Search ..... 123/478, 185.3, 185, 123/185 BA, 149 C, 149 D, 417, 476, 480, 599, 149 R, 472, 185 A

[56] References Cited

U.S. PATENT DOCUMENTS

4,160,435 7/1979 Sleder ..... 123/149 D
4,261,437 4/1981 Zavatkay et al. ..... 123/185 BA
4,727,851 3/1988 Orova ..... 123/149 C
4,873,962 10/1989 Safranek ..... 123/149 R
4,892,079 1/1990 Umezu et al. ..... 123/149 C
4,924,831 5/1990 Piteo et al. 123/417
4,951,625 8/1990 Okuda 123/599

Primary Examiner—Tony M. Argenbright
Assistant Examiner—Thomas N. Moulis

[57] ABSTRACT

A fuel injection system for an internal combustion engine comprises at least one fuel injection valve for supplying fuel into the intake passage of the engine, an electronic control unit responsive to operating conditions of the engine for controlling a time period over which the fuel injection valve is opened and timing for opening the fuel injection valve, a generator responsive to rotation of a flywheel for generating electric power, the generator being connected to an ignition device and the electronic control unit and forming power supplies for driving the ignition device and the electronic control unit, a fuel pump arranged to be driven in unison with the flywheel by torque transmitted from the flywheel, and a pressure regulator for controlling pressure of fuel supplied from the fuel pump to the fuel injection valve.

8 Claims, 2 Drawing Sheets

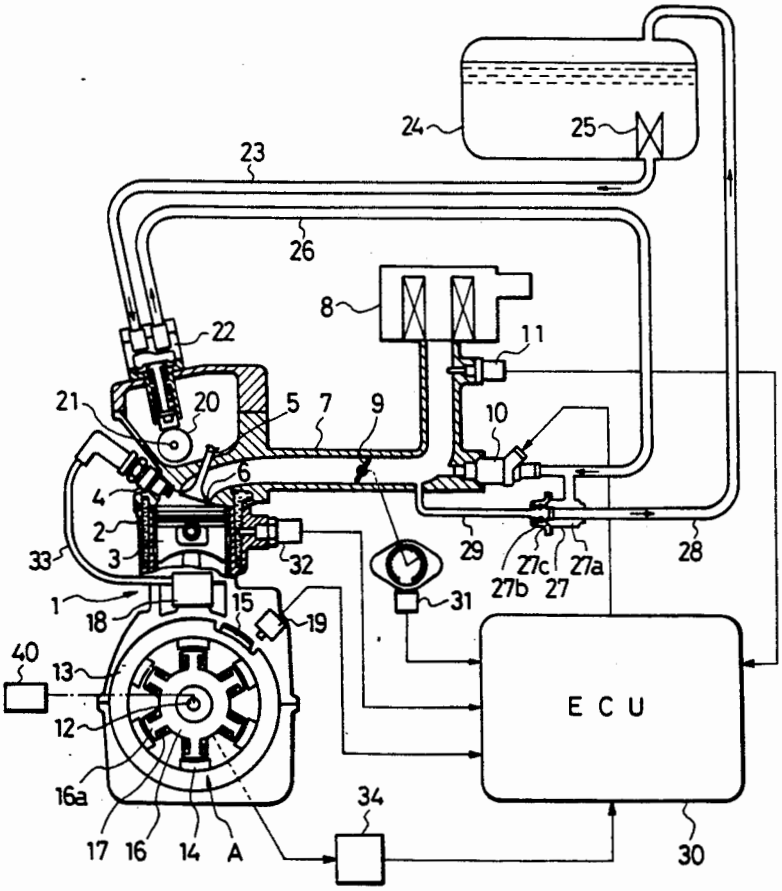

FIG.1

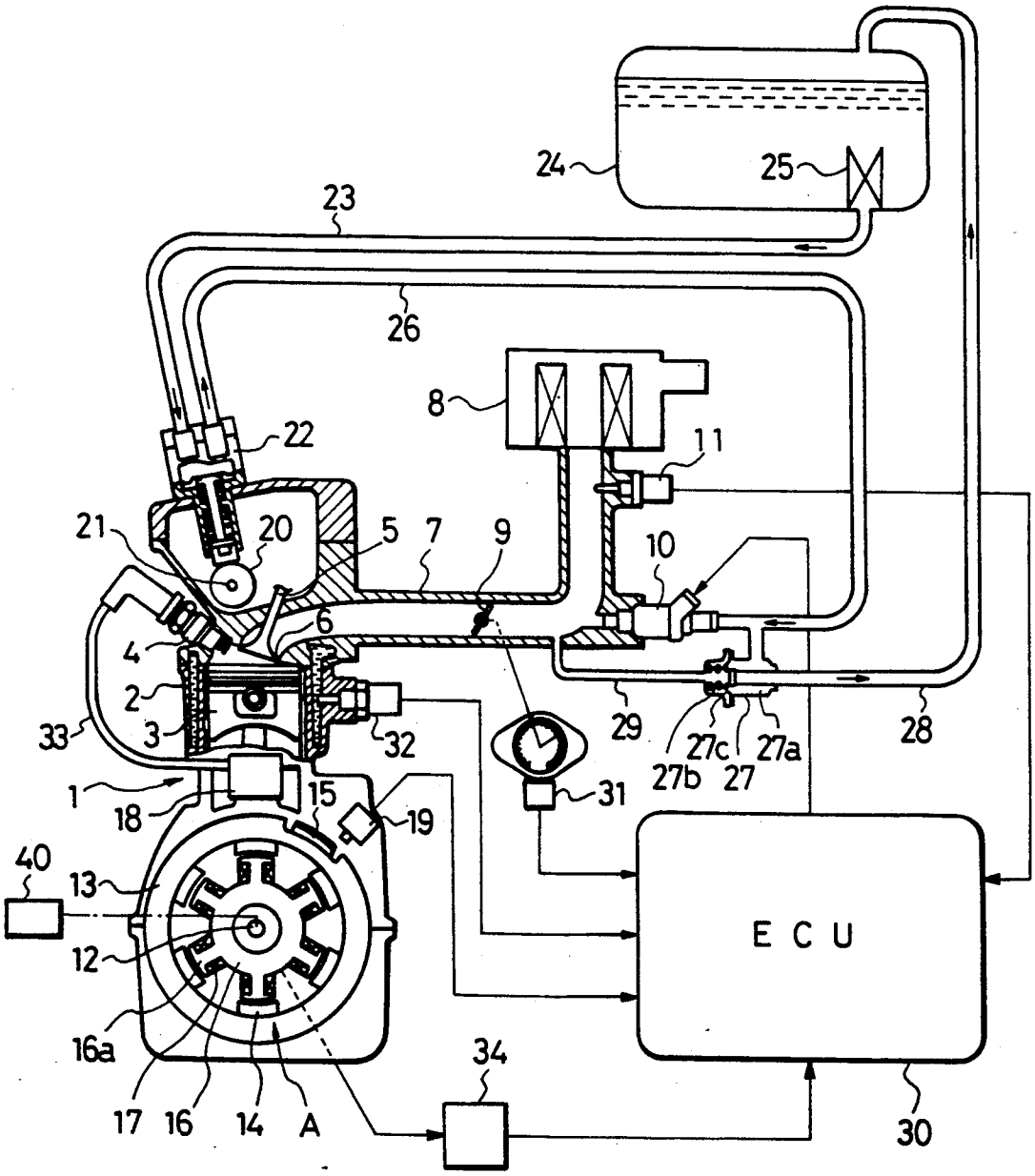
24
25
23
26
8
22
11
21
20
5
7
9
10
6
4
2
3
33
32
29
27c
27a
28
27b
27
1
18
15
19
31
40
13
12
16a
17
16
14
A
34
E C U
30

FIG.2

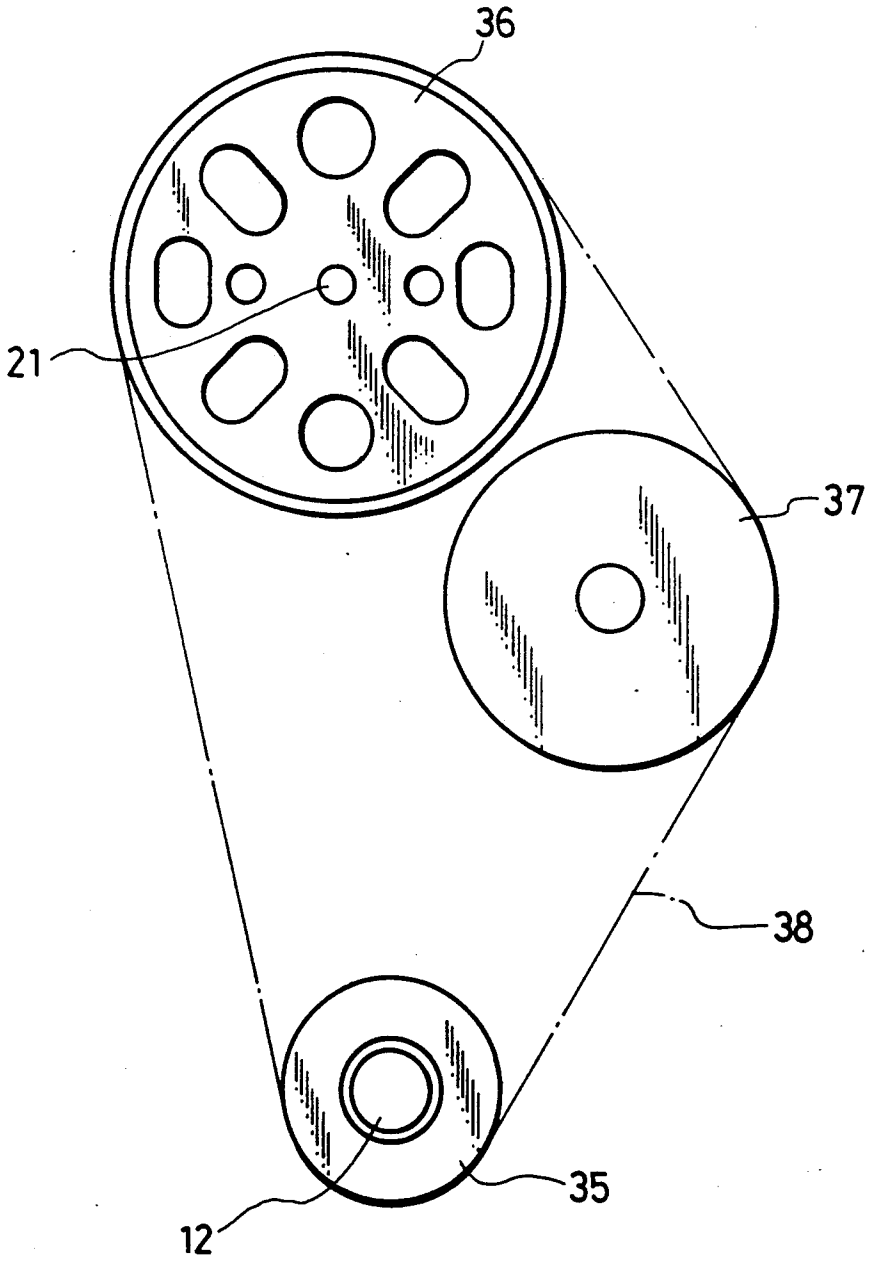

FUEL INJECTION SYSTEM FOR INTERNAL COMBUSTION ENGINES

BACKGROUND OF THE INVENTION

This invention relates to a fuel injection system for an internal combustion engine for supplying fuel to an intake system thereof, and more particularly to an electronically-controlled fuel injection system of this kind which is adapted for use in small-sized engines equipped with no battery.

An electronically-controlled fuel injection system for an internal combustion engine is conventionally known, which comprises fuel injection valves arranged in an intake system, and control means for controlling a time period over which the fuel injection valves are opened in accordance with operating conditions of the engine.

Such a conventional electronically-controlled fuel injection system requires the use of a battery for supplying electric power thereto for driving, fuel injection valves, a control circuit for controlling the valves, and a fuel pump. Therefore, the conventional electronically-controlled fuel injection system cannot be used in small-sized engines which are equipped with no battery (hereinafter referred to as "batteryless engines" unless otherwise specified).

Under the circumstances, it has been proposed e.g. by Japanese Provisional Patent Publication (Kokai) No. 63-93440, to utilize output power from a generator driven by an engine for electronically controlling fuel supply to the engine, during operation thereof. However, insofar as the problems of fuel supply and power supply at the start of the engine are concerned, there no disclosure except that the engine is equipped with a small battery which consumers only a small amount of electric power and can be charged by the use of part of electric power generated by a flywheel magneto.

Further, concerning the above problems, Japanese Provisional Patent Publication (Kokai) No. 63-170541 discloses the use of a battery having a small capacity, such as a dry cell, for starting a batteryless engine.

Also, Japanese Provisional Patent Publication (Kokai) No. 63-259127 discloses the technique of metering fuel by a device operated by intake vacuum.

Thus, the above prior art publications concerning the electronically-controlled fuel injection system having no conventionally-used battery merely disclose respective techniques which are not related to each other, and no disclosure has been made as to how to combine these separately-proposed individual techniques. More specifically, no disclosure has been made as to relationships between the starting operation of the engine, and fuel supply operation and timing therefor, or relationships between ignition, operation of fuel injection valves, and power supply, etc.

SUMMARY OF THE INVENTION

It is an object of the invention to provide an electronically-controlled fuel injection system which is capable of reliably starting an engine without using a battery or a dry cell.

It is a further object of the invention to provide an internal combustion engine which is equipped with a generator for supplying electric power to both an electronically-controlled fuel injection system and an ignition system in such a manner that a supply voltage to one of the two systems is not affected by fluctuations in

a supply voltage to the other system to thereby enable to operate the systems in an efficient and stable manner.

To attain the first-mentioned object, according to a first aspect of the invention, there is provided a fuel injection system for an internal combustion engine including a recoil starter, a flywheel rotatable by operation of the recoil starter, an ignition device, and an intake passage.

The fuel injection system according to the first aspect of the invention is characterized by comprising:

at least one fuel injection valve for supplying fuel into the intake passage;

control means responsive to operating conditions of the engine for controlling a time period over which the fuel injection valve is opened and timing for opening the fuel injection valve;

generator means responsive to rotation of said flywheel for generating electric power, the generator means being connected to the ignition device and the control means and forming power supplies for driving the ignition device and the control means;

a fuel pump arranged to be driven in unison with the flywheel by torque transmitted from the flywheel; and

a pressure regulator for controlling pressure of fuel supplied from the fuel pump to the fuel injection valve.

Preferably, the generator means comprises first and second power generating systems responsive to rotation of the flywheel for generating electric power, the first and second power generating systems being provided independently of each other, one of the first and second power generating systems forming a power supply for driving the ignition device, and the other power generating system forming a power supply for driving the control means. More preferably, the power supply for driving the control means comprises at least one first magnet mounted on an inner periphery of the flywheel, a stator core, and a plurality of windings wound on the stator core and disposed to face the first magnet during rotation of the flywheel.

Also preferably, the power supply for driving the ignition device comprises at least one second magnet mounted on an outer periphery of the flywheel, and an ignition device unit disposed to face the second magnet during rotation of the flywheel.

To attain the second-mentioned object, according to a second aspect of the invention, there is provided an internal combustion engine comprising:

a recoil starter;

a flywheel rotatable by operation of the recoil starter;

an ignition device:

an intake passage;

at least one fuel injection valve for supplying fuel into the intake passage;

control means responsive to operating conditions of the engine for controlling a time period over which the fuel injection valve is opened and timing for opening the fuel injection valve;

generator means responsive to rotation of the flywheel for generating electric power, the generator means being connected to the ignition device and the control means and forming power supplies for driving the ignition device and the control means;

a fuel pump arranged to be driven in unison with the flywheel by torque transmitted from the flywheel; and

a pressure regulator for controlling pressure of fuel supplied from said fuel pump to said fuel injection valve.

Preferably, the generator means comprises first and second power generating systems responsive to rotation of the flywheel for generating electric power, the first and second power generating systems being provided independently of each other, one of the first and second power generating systems forming a power supply for driving the ignition device, and the other power generating system forming a power supply for driving the control means.

More preferably, the power supply for driving the control means comprises at least one first magnet mounted on an inner periphery of the flywheel, a stator core, and a plurality of windings wound on the stator core and disposed to face the first magnet during rotation of the flywheel.

Also preferably, the power supply for driving the ignition device comprises at least one second magnet mounted on an outer periphery of the flywheel, and an ignition device unit disposed to face the second magnet during rotation of the flywheel.

The above and other objects, features, and advantages of the invention will become more apparent from the ensuing detailed description taken in conjunction with the accompanying drawings.

BRIEF DESCRIPTION OF THE DRAWINGS

FIG. **1** is a schematic diagram showing the arrangement of an internal combustion engine and a control system therefor according to an embodiment of the invention; and

FIG. **2** is a view useful in explaining a mechanism for transmitting the torque of a crankshaft to a camshaft.

DETAILED DESCRIPTION

The invention will now be described in detail with reference to the drawings showing an embodiment thereof.

FIG. **1** shows the arrangement of an internal combustion engine and a control system therefor according to an embodiment of the invention. An engine **1** has at least one cylinder **2**, in which are arranged a piston **3** and a spark plug **4**. An intake valve **5** is arranged in an intake port **6** which opens into an upper portion of the cylinder **2**. The intake port **6** is communicated with the atmosphere via an intake pipe **7** and an air cleaner **8**. A throttle valve **9** is arranged in the intake pipe **7**, and a fuel injection valve **10** and an intake air temperature sensor **11** for detecting intake air temperature are arranged in the intake pipe at respective locations upstream of the throttle valve **9**. The fuel injection valve **10** injects fuel into the intake pipe **7** at a location upstream of the throttle valve **9**.

A flywheel **13** is rigidly fixed to a crankshaft **12** of the engine **1**. An AC generator A comprises the flywheel **13** as a rotor having six first magnets **14** and one second magnet **15** which are mounted on the inner periperal surface and outer peripheral surface of the flywheel **13**, respectively, a stator core **16** having six projections **16***a* disposed to face the first magnets **14**, and windings **17** wound around the respective projections **16***a*. The first magnets **14**, the stator core **16**, and the windings **17** of the generator A form a power supply unit for driving the fuel injection valve **10**. An ignition device unit **18** having a built-in ignition coil, not shown, and a crank angle sensor **19** are disposed such that they can be brought into facing relation to the second magnet **15**. The ignition coil of the ignition device unit **18** is electrically connected to the spark plug **4** via a wire **33**. In the present embodiment, the ignition device unit **18** is formed of a conventional self-triggering type ignition device such as ones described in U.S. Pat. No. 3,878,452, and Japanese Patent Publication (Kokoku) No. 57-27310.

Arranged above the cylinder **2** are a fuel pump **22** for pressurizing fuel to be supplied to the fuel injection valve **10**, and a cam **20** for driving the fuel pump **22**. A cam pulley **36** is rigidly mounted on a cam shaft in which the cam **20** is secured, as shown in FIG. **2**. A timing belt **38** is engaged over the cam pulley **36** and a crankshaft pulley **35** rigidly mounted on the crankshaft **12** for driving the former by the latter. Further, in the present embodiment, a water pump pulley **37** for driving a water pump, not shown, is rotatively driven by the crankshaft pulley via the timing belt **38**. Thus, with rotation of the crankshaft **12**, the water pump and the fuel pump **22** are driven.

The fuel pump **22** is connected to a fuel tank **24** via a conduit **23**, and also to the fuel injection valve **10** and a pressure regulator **27** via a conduit **26**. A fuel filter **25** is disposed in the fuel tank **24** such that it covers an open end of the conduit **23** which opens into the fuel tank **24**. Fuel in the fuel tank **24** is supplied to the fuel pump **22** via the fuel filter **25** and the conduit **23**. Pressurized fuel from the fuel pump **22** is supplied via the conduit **26** to the fuel injection valve **10**. The pressure regulator **27** comprises a negative pressure chamber **27***b*, a fuel chamber **27***a*, and a diaphragm **27***c* having a valve body, which separates the negative pressure chamber **27***b* and the fuel chamber **27***a* from each other. Connected to the fuel chamber **27***a* are the conduit **26** and a conduit **28** connected to the fuel tank **24**. On the other hand, the negative pressure chamber **27***b* is connected to a portion of the intake pipe **7** in the vicinity of a nozzle of the fuel injection valve **10** via a conduit **29**. Thus, the pressure regulator **27** operates to return a portion of fuel supplied from the fuel pump **22** to the fuel tank **24** in response to negative pressure prevailing in the vicinity of the nozzle of the fuel injection valve **10** to thereby regulate the pressure of fuel supplied to the fuel injection valve **10**.

The windings **17** of the AC generator A are electrically connected to a power supply circuit **34** for rectifying, smoothing and stabilizing output voltage from the AC generator A. The power supply circuit **34** supplies supply voltage to an electronic control unit (hereinafter referred to as "the ECU") **30**.

Further, there are provided a throttle valve opening sensor **31** for detecting the opening of the throttle valve **9** and an engine coolant temperature sensor **32** for detecting the temperature of an engine coolant circulating through the walls of the cylinder **2**. Output signals from the sensors **31** and **32** are supplied to the ECU **30** together with output signals from the intake air temperature sensor **11** and the crank angle sensor **19**.

The ECU **30** controls the timing for opening the fuel injection valve **10** and the duration over which the fuel injection valve **10** is opened, by generating a signal for driving the fuel injection valve **10** to open same, to thereby allow fuel to be injected into the intake pipe **7**.

Further, a recoil starter **40** for directly rotating the crankshaft **12** by manual operation at the start of the engine is mounted on an end of the flywheel **13** which is exposed to the outside of the engine unit. The recoil starter **40** may be of such a known type as described in U.S. Pat. Nos. 2,692,589, 2,742,887, and 3,465,740.

The operation of the engine and the control system therefor having the above-described construction will be described below.

When the recoil starter **40** is manually operated to rotate the crankshaft **12**, the torque of the crankshaft **12** is transmitted via the crankshaft pully **35**, timing belt **38**, cam pulley **36**, cam shaft **21** to the cam **20** to rotate same. As a result, almost simultaneously with manual operation of the recoil starter **40**, the fuel pump **22** starts to pressurize fuel to be supplied to the fuel injection valve **10**. Therefore, supply of fuel is not delayed as in the prior art case where intake negative pressure is utilized. Further, simultaneously with the manual operation of the recoil starter **40**, the flywheel **13** is rotated together with rotating of the crankshaft **12** so that voltage is generated across the windings by rotation of the flywheel **13**, whereby the generated voltage is supplied to the ECU **30** via the power supply circuit **34**. At the same time, voltage is generated across the ignition coil of the ignition device unit **18**, which is supplied to the spark plug **4** to drive same.

As described above, immediately upon manual operation of the recoil starter **40**, the fuel pressure can be increased to a sufficient level for operation of the fuel injection valve **10**, by immediate starting of the fuel pump **22** interlocked with the recoil starter **40**, and at the same time the ECU **30** becomes ready to supply driving signals to the fuel injection valve **10** and the spark plug **4**. This enables to start the engine reliably and easily even within a relatively short time period during which the flywheel **13** rotates by inertia.

Further, the system comprising the first magnets **14** and the windings **17** for obtaining generator power for driving the fuel injection valve **10**, and the system comprising the second magnet **15** and the ignition device unit **18** for obtaining generator power for driving the spark plug **4**, are provided separately from each other, so that large fluctuations in the supply voltage for driving the spark plug **4** which occur whenever the spark plug is ignited do not directly affect the supply voltage for driving the fuel injection valve **10**, and hence there is no mutual interference between the supply voltages for driving the fuel injection valve **10** and the spark plug **4**. This makes it possible to efficiently and stably operate the fuel injection valve **10** and the spark plug **4** by relatively small energy or electric power obtained from kinetic energy of inertial rotation of the flywheel **13**.

What is claimed is:

1. An electronically-controlled fuel injection system with no battery for an internal combustion engine including a recoil starter, a flywheel fixed to an output shaft of said engine for rotation therewith and rotatable by operation of said recoil starter, an ignition device, and an intake passage, said fuel injection system comprising:

at least one fuel injection valve for supplying fuel into said intake passage;

control means responsive to operating conditions of said engine for controlling a time period over which said fuel injection valve is opened and timing for opening said fuel injection valve;

generator means provided integrally on said flywheel and responsive to rotation of said flywheel for generating electric power, said generator means being connected to said ignition device and said control means and forming power supplies for driving said ignition device and said control means;

a fuel pump arranged to be driven in unison with said flywheel by torque transmitted from said flywheel for pressurizing fuel supplied to said fuel injection valve; and

a pressure regulator for controlling pressure of fuel supplied from said fuel pump to said fuel injection valve.

2. An electronically-controlled fuel injection system with no battery according to claim **1**, wherein said generator means comprises first and second power generating systems responsive to rotation of said flywheel for generating electric power, said first and second power generating systems being provided independently of each other, one of said first and second power generating systems forming a power supply for driving said ignition device, and the other power generating system forming a power supply for driving said control means.

3. An electronically-controlled fuel injection system with no battery according to claim **2**, wherein said power supply for driving said control means comprises at least one first magnet mounted on an inner periphery of said flywheel, a stator core, and a plurality of windings wound on said stator core and disposed to face said first magnet during rotation of said flywheel.

4. An electronically-controlled fuel injection system with no battery according to claim **2** or **3**, wherein said power supply for driving said ignition device comprises at least one second magnet mounted on an outer periphery of said flywheel, and an ignition device unit disposed to face said second magnet during rotation of said flywheel.

5. An internal combustion engine comprising:

a recoil starter;

a flywheel fixed to an output shaft of said engine for rotation therewith and rotatable by operation of said recoil starter;

an ignition device;

an intake passage;

at least one fuel injection valve for supplying fuel into said intake passage;

electronic control means with no battery and responsive to operating conditions of said engine for controlling a time period over which said fuel injection valve is opened and timing for opening said fuel injection valve;

generator means provided integrally on said flywheel and responsive to rotation of said flywheel for generating electric power, said generator means being connected to said ignition device and said control means and forming power supplies for driving said ignition device and said control means;

a fuel pump arranged to be driven in unison with said flywheel by torque transmitted from said flywheel for pressurizing fuel supplied to said fuel injection valve; and

a pressure regulator for controlling pressure of fuel supplied from said fuel pump to said fuel injection valve.

6. An internal combustion engine according to claim **5**, wherein said generator means comprises first and second power generating systems responsive to rotation of said flywheel for generating electric power, said first and second power generating systems being provided independently of each other, one of said first and second power generating systems forming a power supply for driving said ignition device, and the other power gener-

ating system forming a power supply for driving said control means.

7. An internal combustion engine according to claim 6, wherein said power supply for driving said control means 7 comprises at least one first magnet mounted on an inner periphery of said flywheel, a stator core, and a plurality of windings wound on said stator core and disposed to face said first magnet during rotation of said flywheel.

8. An internal combustion engine according to claim 6 or 7, wherein said power supply for driving said ignition device comprises at least one second magnet mounted on an outer periphery of said flywheel, and an ignition device unit disposed to face said second magnet during rotation of said flywheel.

* * * * *