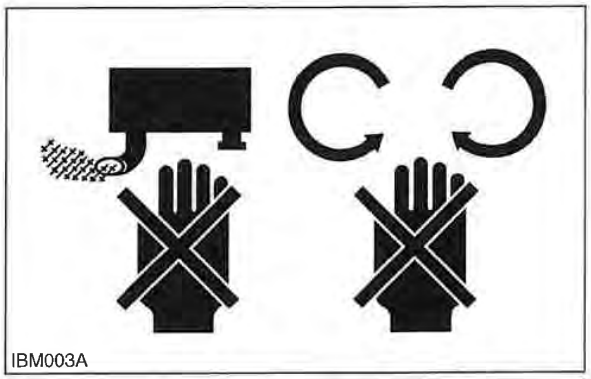
IBM003A

IBM004A

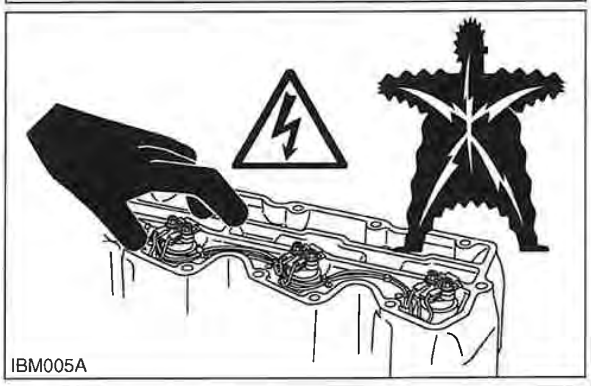
IBM005A

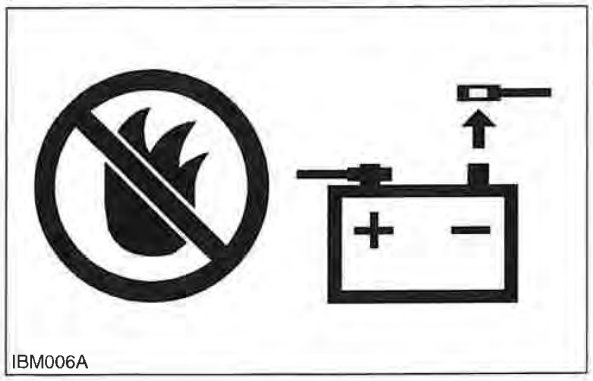
IBM006A

OPERATE SAFELY

- Do not use the machine after you consume alcohol or medication or when you are tired.
- Put on applicable clothing and safety equipment.
- Use applicable tools only. Do not use alternative tools or parts.
- When 2 or more persons do servicing, make sure that you do it safely.
- Do not touch the hot parts or parts that turn when the engine operates.
- Do not remove the radiator cap when the engine operates, or immediately after it stops. If not, hot water can spout out from the radiator. Only remove the radiator cap when it is at a sufficiently low temperature to touch with bare hands. Slowly loosen the cap to release the pressure before you remove it fully.
- Released fluid (fuel or hydraulic oil) under pressure can cause damage to the skin and cause serious injury. Release the pressure before you disconnect hydraulic or fuel lines. Tighten all connections before you apply the pressure.
- Do not open a fuel system under high pressure. The fluid under high pressure that stays in fuel lines can cause serious injury. Do not disconnect or repair the fuel lines, sensors, or any other components between the fuel pump and injectors on engines with a common rail fuel system under high pressure.
- Put on an applicable ear protective device (earmuffs or earplugs) to prevent injury against loud noises.
- Be careful about electric shock. The engine generates a high voltage of more than DC100 V in the ECU and is applied to the injector.

WSM000001INI0004US0

PREVENT A FIRE

- Fuel is very flammable and explosive under some conditions. Do not smoke or let flames or sparks in your work area.
- To prevent sparks from an accidental short circuit, always disconnect the battery negative cable first and connect it last.
- The battery gas can cause an explosion. Keep the sparks and open flame away from the top of battery, especially when you charge the battery.
- Make sure that you do not spill fuel on the engine.

WSM000001INI0005US0

Petitioner MWE Investments, LLC, et al.
Exhibit 1003, Page 801

IBM007A

KEEP A GOOD AIRFLOW IN THE WORK AREA

- If the engine is in operation, make sure that the area has good airflow. Do not operate the engine in a closed area. The exhaust gas contains poisonous carbon monoxide.

WSM000001INI0006US0

IBM009A

DISCARD FLUIDS CORRECTLY

- Do not discard fluids on the ground, down the drain, into a stream, pond, or lake. Obey related environmental protection regulations when you discard oil, fuel, coolant, electrolyte and other dangerous waste.

WSM000001INI0007US0

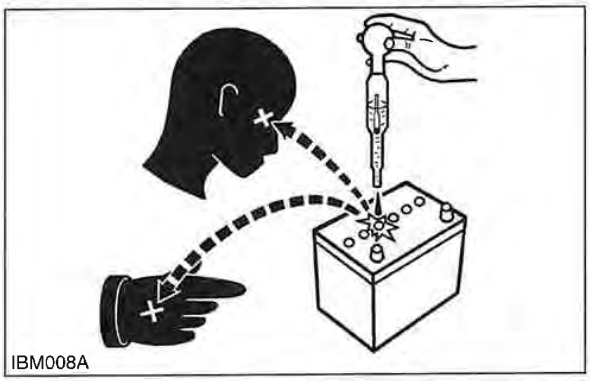
IBM008A

PREVENT ACID BURNS

- Keep electrolyte away from your eyes, hands and clothing. Sulfuric acid in battery electrolyte is poisonous and it can burn your skin and clothing and cause blindness. If you spill electrolyte on yourself, clean yourself with water, and get medical aid immediately.

WSM000001INI0008US0

IBM010A

PREPARE FOR EMERGENCIES

- Keep a first aid kit and fire extinguisher ready at all times.
- Keep the emergency contact telephone numbers near your telephone at all times.

WSM000001INI0009US0

Petitioner MWE Investments, LLC, et al.
Exhibit 1003, Page 802

2. SPECIFICATIONS

Model	WG972-E2	DF972-E2	
Number of Cylinder	3		
Type	Vertical, water cooled, 4-cycle Gasoline engine	Vertical, water cooled, 4-cycle Dual Fuel (Gasoline / LPG) engine	
		Gasoline fuel	LPG fuel
Bore × Stroke	74.5 x 73.6 mm (2.93 x 2.90 in.)		
Total Displacement	962 cm^3 (58.7 cu.in.)		
ISO Net Continuous	18.6 kW / 3600 min^{-1} (rpm) 25.0 HP / 3600 min^{-1} (rpm)		17.5 kW / 3600 min^{-1} (rpm) 23.5 HP / 3600 min^{-1} (rpm)
ISO / SAE Net Intermittent	23.1 kW / 3600 min^{-1} (rpm) 31.0 HP / 3600 min^{-1} (rpm)		22.0 kW / 3600 min^{-1} (rpm) 29.5 HP / 3600 min^{-1} (rpm)
SAE Gross Intermittent	24.2 kW / 3600 min^{-1} (rpm) 32.5 HP / 3600 min^{-1} (rpm)		23.1 kW / 3600 min^{-1} (rpm) 31.0 HP / 3600 min^{-1} (rpm)
Maximum Bare Speed	3850 to 3950 min^{-1} (rpm)		
Minimum Bare Idling Speed	1400 to 1600 min^{-1} (rpm)		
Cylinder Head	Overhead-Valve		
Ignition System	Distributor-Less Solid Stage Type		
Governor	Centrifugal Ball Mechanical Type / Electronic Governor		
Direction of Rotation	Counter-Clockwise (Viewed from flywheel)		
Spark Plug	NGK BKR4E		
Ignition Timing	0.37 rad (21 °) before T.D.C. / 3600 min^{-1} (rpm)		
Firing Order	1-2-3		
Compression Ratio	9.2 : 1		
Lubricating System	Forced Lubrication by Trochoid Pump		
Oil Pressure Indication	Electrical Type Switch		
Lubricating Filter	Full Flow Paper Filter (Cartridge Type)		
Cooling System	Pressurized Radiator (not included in the basic model), Forced Circulation with Water Pump		
Starting System	Electric Starting with Starter		
Starting Motor	12V, 1.0 kW		
Battery	12 V, 52 AH or equivalent		
Charging Alternator	12 V, 150 W		
Fuel	*Unleaded Automobile Gasoline		Standard Commercial LP Gas
Lubricating Oil	Better than SH Class (API)		
Lubricating Oil Capacity	3.4 L (0.90 U.S.gals)		
Weight (Dry)	72.0 kg (159 lbf)		
Application	General Power Source		

*The specification described above is of the standard engine of each model.
*Conversion Formula : HP = 0.746 kW, PS = 0.7355 kW

Petitioner MWE Investments, LLC, et al.
Exhibit 1003, Page 803

Model	DG972-E2-BBH	DG972-E2-SAEH
Number of Cylinder	3	
Type	Vertical, water cooled, 4-cycle Natural Gas engine	
Bore × Stroke	74.5 x 73.6 mm (2.93 x 2.90 in.)	
Total Displacement	962 cm^3 (58.7 cu.in.)	
ISO Net Continuous	14.5 kW / 3600 min^{-1} (rpm) 19.4 HP / 3600 min^{-1} (rpm)	
ISO / SAE Net Intermittent	17.6 kW / 3600 min^{-1} (rpm) 23.6 HP / 3600 min^{-1} (rpm)	
SAE Gross Intermittent	18.7 kW / 3600 min^{-1} (rpm) 25.1 HP / 3600 min^{-1} (rpm)	
Maximum Bare Speed	3850 to 3950 min^{-1} (rpm)	
Minimum Bare Idling Speed	1400 to 1600 min^{-1} (rpm)	
Cylinder Head	Overhead-Valve	
Ignition System	Distributor-Less Solid Stage Type	
Governor	Centrifugal Ball Mechanical Type / Electronic Governor	
Direction of Rotation	Counter-Clockwise (Viewed from flywheel)	
Spark Plug	NGK BKR4E	
Ignition Timing	0.49 rad (28 °) before T.D.C. / 3600 min^{-1} (rpm)	
Firing Order	1-2-3	
Compression Ratio	9.2 : 1	
Lubricating System	Forced Lubrication by Trochoid Pump	
Oil Pressure Indication	Electrical Type Switch	
Lubricating Filter	Full Flow Paper Filter (Cartridge Type)	
Cooling System	Pressurized Radiator (not included in the basic model), Forced Circulation with Water Pump	
Starting System	Electric Starting with Starter	
Starting Motor	12V, 1.0 kW	
Battery	12 V, 52 AH or equivalent	
Charging Alternator	12 V, 480 W	
Fuel	Natural Gas	
Lubricating Oil	Better than SH Class (API)	
Lubricating Oil Capacity	3.4 L (0.90 U.S.gals)	
Weight (Dry)	72.0 kg (159 lbf)	95.4 kg (210 lbf)
Application	General Power Source	

*The specification described above is of the standard engine of each model.
*Conversion Formula : HP = 0.746 kW, PS = 0.7355 kW

9Y1210318INI0001US0

3. IMPORTANT ITEMS OF EXHAUST EMISSION REGULATION

To conform with U.S. EPA and CARB SOREs (Small Off Road Engines) emission regulations, the WG972-E2, DF972-E2 and DG972-E2 engine must observe below items.

9Y1210318INI0002US0

[1] INLET AND EXHAUST SYSTEM

The WG972-E2, DF972-E2 and DG972-E2 engine must use the below air cleaner and inlet pipe, and exhaust back pressure of the muffler must be within the below values.

Part	Part No.
Genuine air cleaner	1G657-1101-1
Genuine inlet pipe	EG561-1164-1

Brake horse power	SAE net int.	Allowable maximum exhaust back pressure
23.1 kP (31.0 HP) / 3600 min^{-1} (rpm)		19.6 kPa (147 mmHg) / 3600 min^{-1} (rpm)

Any modifications to the fuel system or any adjustments made on this engine will cause this engine to be in non-compliance with emission regulations.

9Y1210318INI0003US0

[2] ALTITUDE COMPENSATION KIT (WG972-E2, DF972-E2)

■ **IMPORTANT**

- **Altitude compensation kit is applied for EPA and CARB certified engines only.**
  EPA and CARB emission regulations require the ultimate user of non-road SI engine, as their obligation, to adjust the emissions by installing the appropriate genuine altitude compensation kit. And the engine manufacturer must provide such kit when engine is operated at an altitude that exceeds the standard level, as guarantied by the engine manufacturer. For this purpose, KUBOTA prepared genuine altitude compensation kit described below. The ultimate users of SI engine must comply with the regulations through the installation of the appropriate altitude compensation kit for the altitude range where the engine will be operated.
- **"Replacement of Altitude Compensation Kit" for reference to the exchange of altitude compensation kit.**

Altitude Compensation Kit	Applicable Altitude Ranges
Original Carburetor (with 0 m (0 ft) kit)	0 to 700 m (0 to 2300 ft)
1000 m (3281 ft) compensation kit	300 to 1700 m (984 to 5577 ft)
2000 m (6562 ft) compensation kit	1300 to 2700 m (4265 to 8858 ft)

9Y1210318INI0004US0

[3] LPG REGULATOR WITH VAPORIZER (DF972-E2)

When operating DF972-E2 on LPG, only a KUBOTA GENUINE LPG REGULATOR KIT can be used.

9Y1210318INI0005US0

[4] KUBOTA RECOMMENDED LPG FUEL SPECIFICATIONS (DF972-E2)

- Commercial Propane gas only.
- Equivalent to Propane H-D-5 of GPA* standards.

C_3H_8	C_3H_6	C_4H_{10}	Others
≥ 90 %	≤ 5 %	≤ 2.5 %	–

*GPA means Gas Processors Association (U.S.A.)

9Y1210318INI0006US0

[5] LENGTH OF THE LPG VAPOR HOSE (DF972-E2)

The length of the LPG vapor hose between the LPG carburetor and LPG vaporizer must be within 280 to 320 mm (11.1 to 12.5 in.)

The incorrect use of the hose may not conform to EPA and CARB EMISSION REGULATIONS.

9Y1210318INI0007US0

Petitioner MWE Investments, LLC, et al.
Exhibit 1003, Page 805

[6] GAS REGULATOR (DG972-E2)

When operating DG972-E2 on natural gas, only a KUBOTA GENUINE GAS REGURATOR can be used.

9Y1210318INI0008US0

[7] KUBOTA RECOMMENDED FUEL SPECIFICATIONS (DG972-E2)

- Natural gas only.
- Consult KUBOTA for further information of fuel used.

9Y1210318INI0009US0

[8] LENGTH OF THE GAS HOSE (DG972-E2)

The length of the gas hose between the gas mixer and gas regulator must be within 280 to 320 mm (11.1 to 12.5 in.).

The incorrect use of the hose may not conform to EPA and CARB EMISSION REGULATIONS.

9Y1210318INI0010US0

Petitioner MWE Investments, LLC, et al.
Exhibit 1003, Page 806

4. PERFORMANCE CURVES

WG972

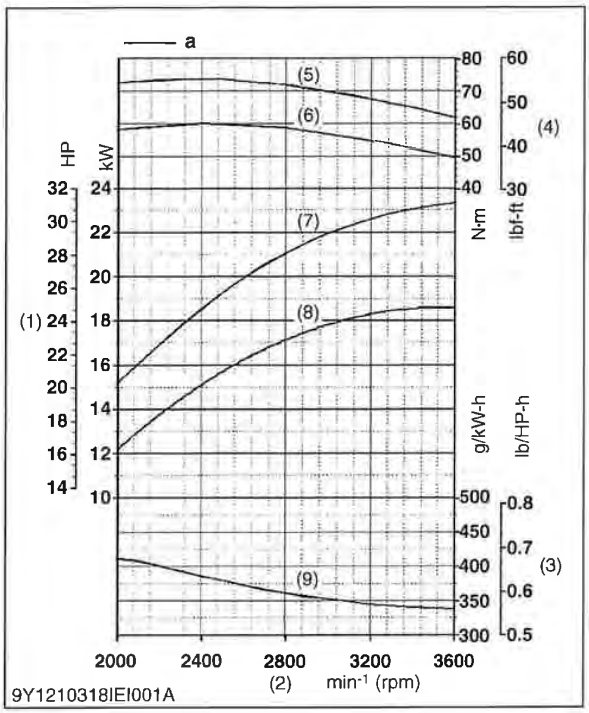

(1) Brake Horsepower
(2) Engine Speed
(3) Specific Fuel Consumption
(4) Torque
(5) Net Intermittent Torque
(6) Net Continuous Torque
(7) Net Intermittent Brake Horsepower
(8) Net Continuous Brake Horsepower
(9) Net Intermittent Specific Fuel Consumption

a : Gasoline Use
b : LP Gas Use

DF972

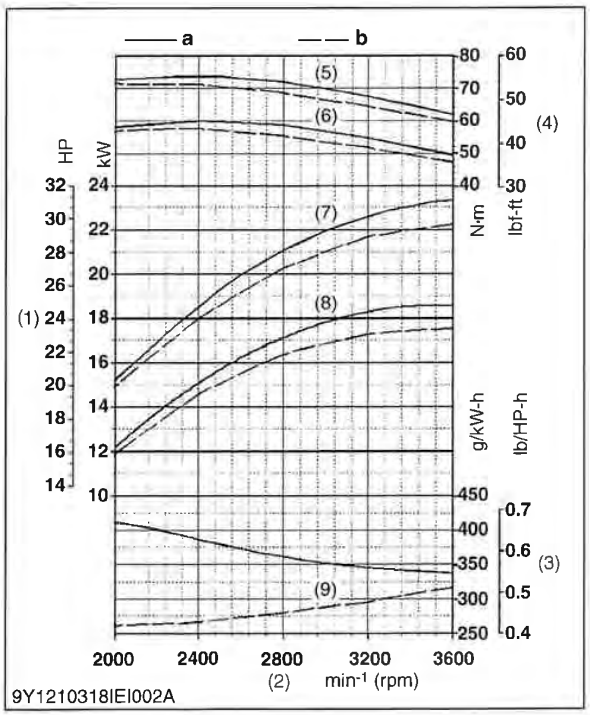

Petitioner MWE Investments, LLC, et al.
Exhibit 1003, Page 807

DG972

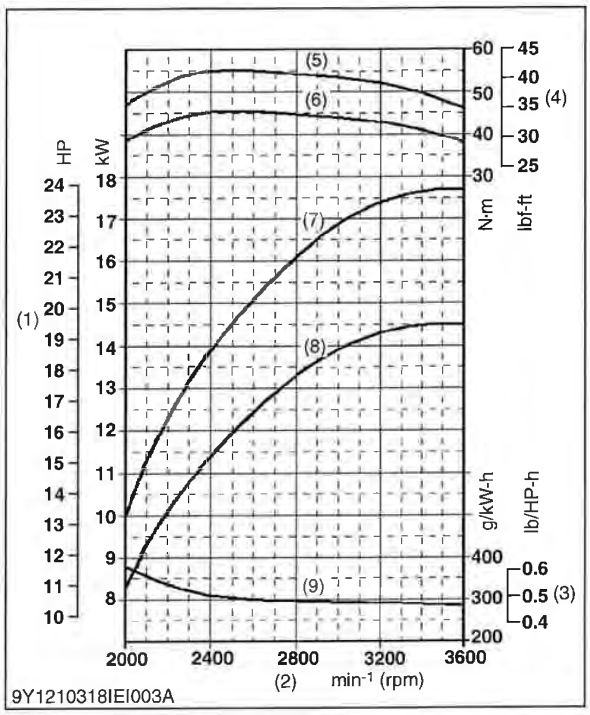

(1) Brake Horsepower
(2) Engine Speed
(3) Specific Fuel Consumption
(4) Torque
(5) Net Intermittent Torque
(6) Net Continuous Torque
(7) Net Intermittent Brake Horsepower
(8) Net Continuous Brake Horsepower
(9) Net Intermittent Specific Fuel Consumption

9Y1210318INI0011US0

Petitioner MWE Investments, LLC, et al.
Exhibit 1003, Page 808

5. DIMENSIONS

WG972, DF972

Unit : mm (in.)

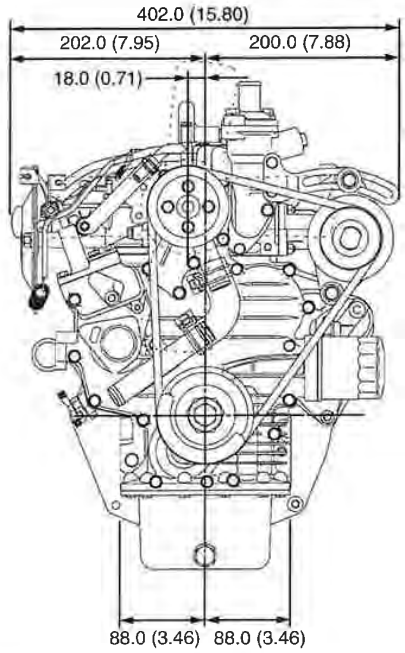

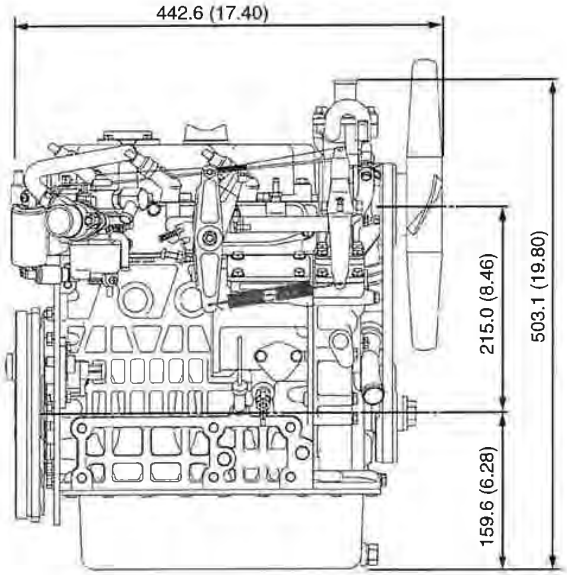

3EBAAABFP001A

9Y1210318INI0012US0

Petitioner MWE Investments, LLC, et al.
Exhibit 1003, Page 809

WG972, DF972 (Electronic Governor Model)

Unit : mm (in.)

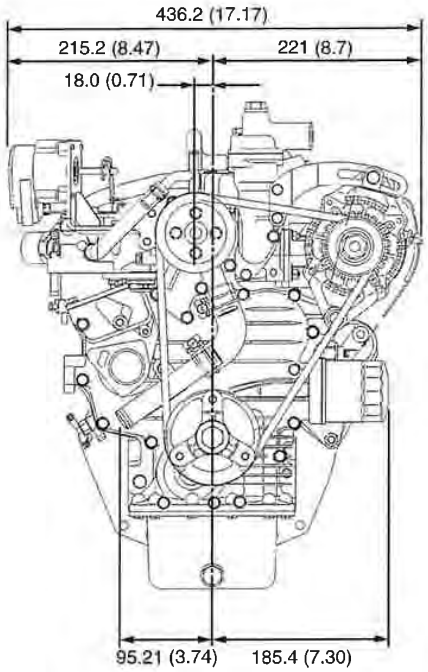

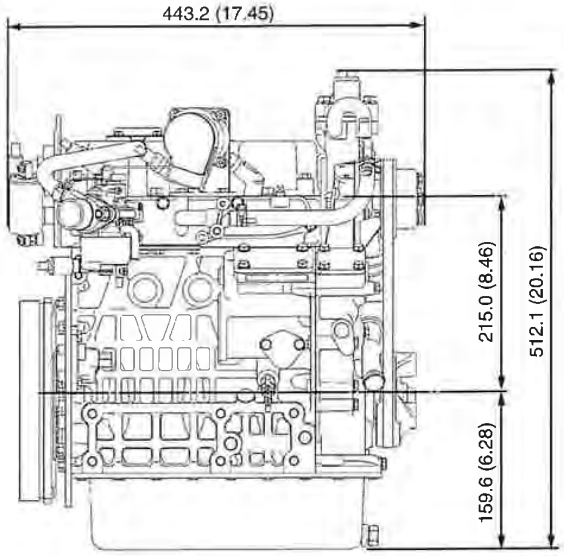

3EBAAABFP002A

9Y1210318INI0013US0

Petitioner MWE Investments, LLC, et al.
Exhibit 1003, Page 810

DG972-E2-BBH

Unit : mm (in.)

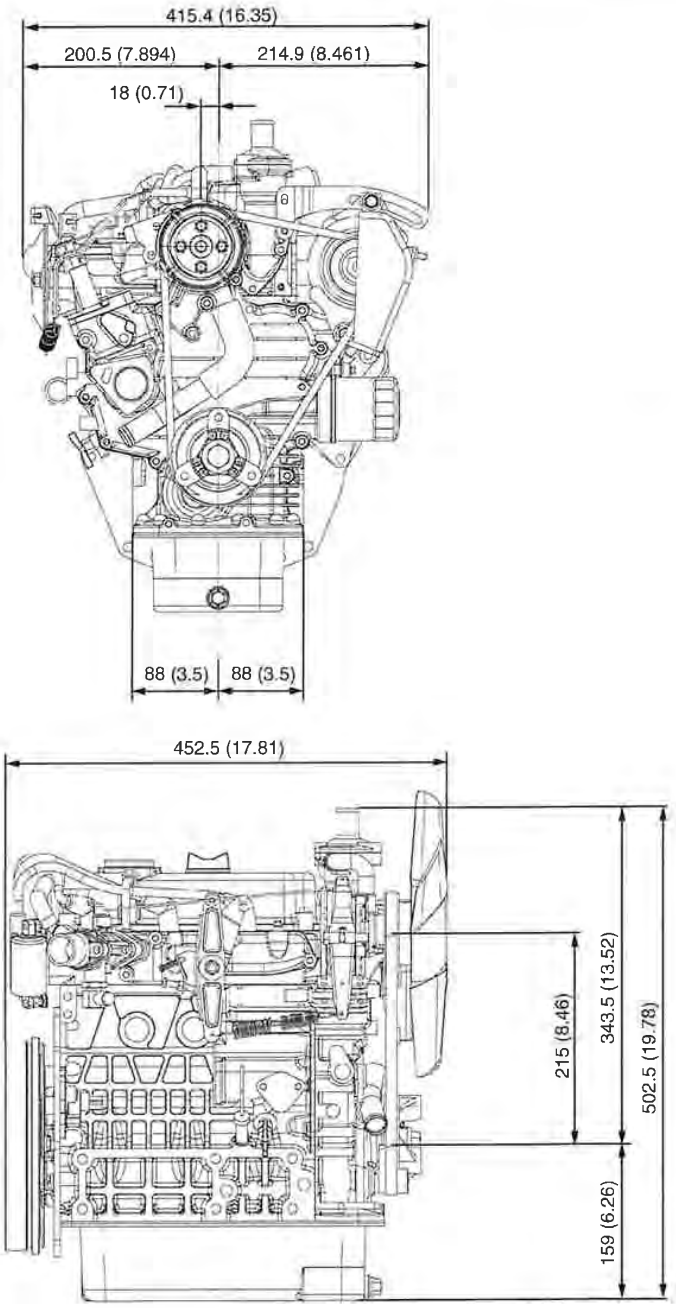

9Y1210318IFI001A

9Y1210318INI0014US0

Petitioner MWE Investments, LLC, et al.
Exhibit 1003, Page 811

DG972-E2-SAEH

Unit : mm (in.)

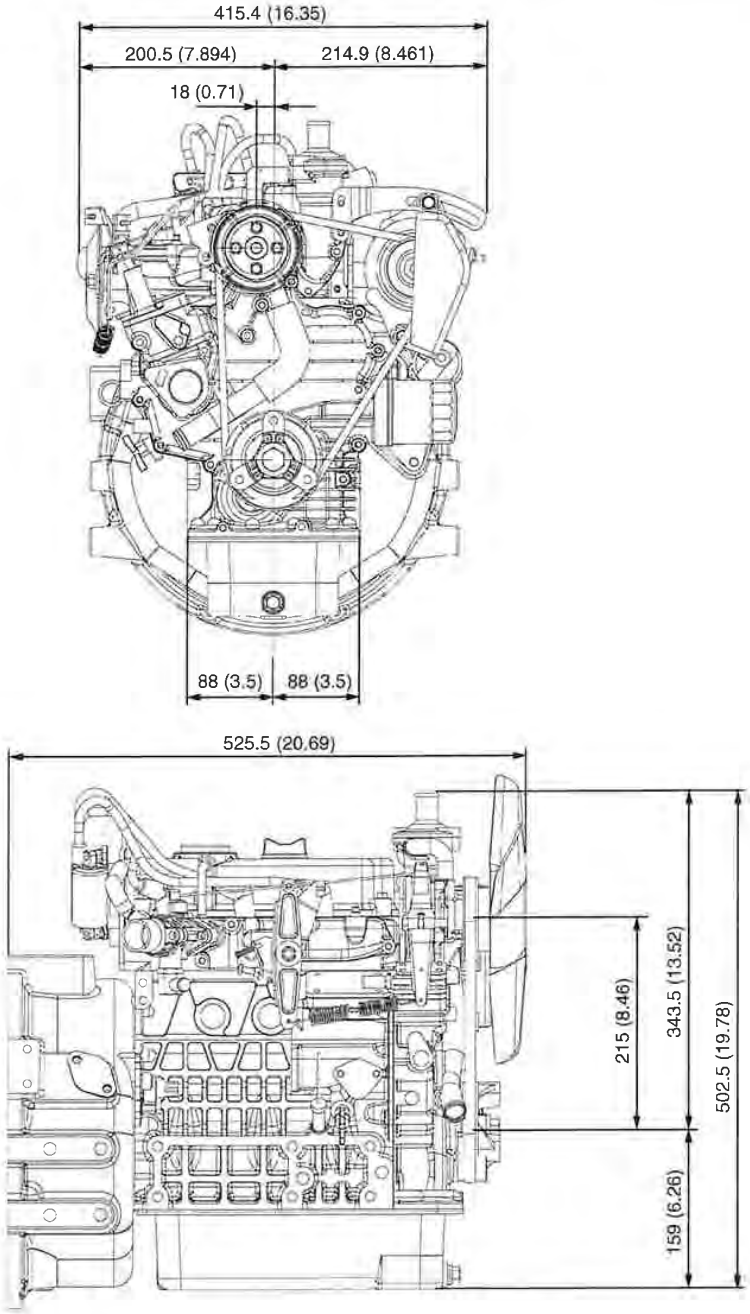

9Y1210318IFI002A

9Y1210318INI0015US0

Petitioner MWE Investments, LLC, et al.
Exhibit 1003, Page 812

6. WIRING DIAGRAM

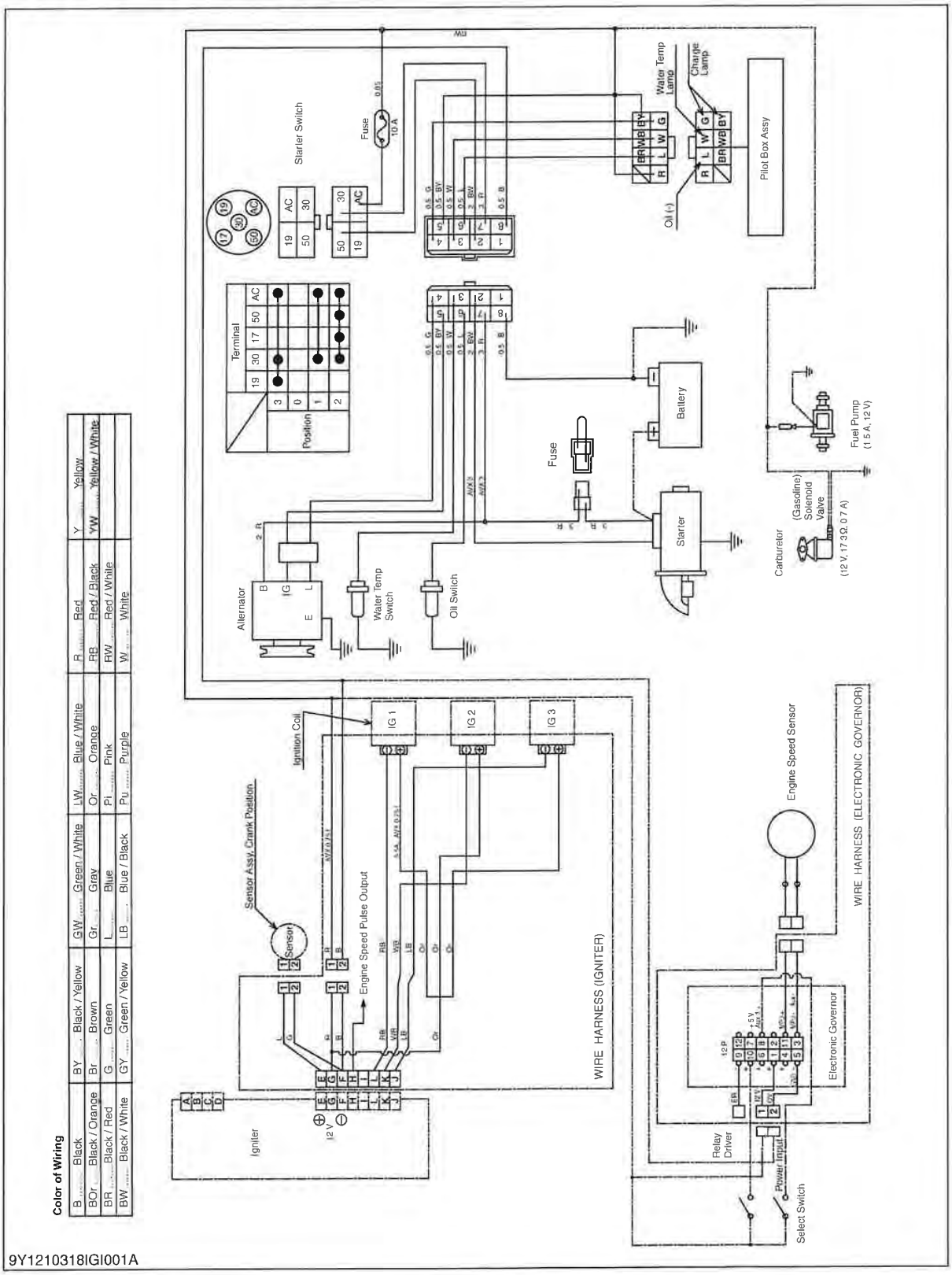

9Y1210318INI0016US0

Petitioner MWE Investments, LLC, et al.
Exhibit 1003, Page 813

G GENERAL

Petitioner MWE Investments, LLC, et al.
Exhibit 1003, Page 814

GENERAL

CONTENTS

1. ENGINE IDENTIFICATION G-1
   [1] MODEL NAME AND ENGINE SERIAL NUMBER G-1
   [2] CYLINDER NUMBER G-4
2. GENERAL PRECAUTIONS G-5
3. MAINTENANCE CHECK LIST G-6
4. CHECK AND MAINTENANCE G-8
   [1] DAILY CHECK POINTS G-8
   [2] CHECK POINTS OF INTIAL 50 HOURS G-10
   [3] CHECK POINTS OF EVERY 50 HOURS G-11
   [4] CHECK POINTS OF EVERY 100 HOURS G-13
   [5] CHECK POINTS OF EVERY 200 HOURS G-14
   [6] CHECK POINTS OF EVERY 1 YEAR G-15
   [7] CHECK POINTS OF EVERY 1000 HOURS G-18
   [8] CHECK POINTS OF EVERY 2 YEARS G-21
5. SPECIAL TOOLS G-26

1. ENGINE IDENTIFICATION

[1] MODEL NAME AND ENGINE SERIAL NUMBER

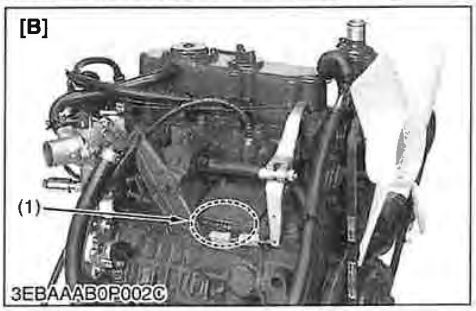

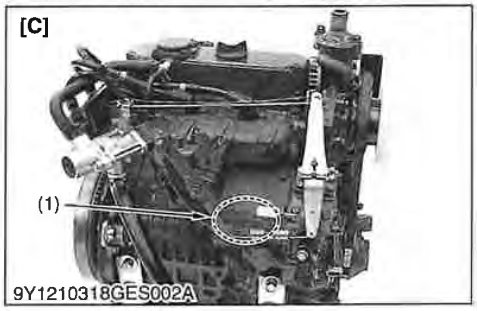

When contacting the manufacture, always specify your engine model name and serial number.

The engine model and its serial number need to be identified before the engine can be serviced or parts replaced.

■ Engine Serial Number

The engine serial number is an identified number for the engine. It is marked after the engine model number.

It indicates month and year of manufacture as follows.

Year of manufacture

Alphabet or Number	Year	Alphabet or Number	Year
1	2001	F	2015
2	2002	G	2016
3	2003	H	2017
4	2004	J	2018
5	2005	K	2019
6	2006	L	2020
7	2007	M	2021
8	2008	N	2022
9	2009	P	2023
A	2010	R	2024
B	2011	S	2025
C	2012	T	2026
D	2013	V	2027
E	2014		

(1) Engine Model Name and Serial Number

[A] WG972-E2
[B] DF972-E2
[C] DG972-E2

(To be continued)

Petitioner MWE Investments, LLC, et al.
Exhibit 1003, Page 816

(Continued)

Month of manufacture

Month	Engine Lot Number	
January	A0001 ~ A9999	B0001 ~ BZ999
February	C0001 ~ C9999	D0001 ~ DZ999
March	E0001 ~ E9999	F0001 ~ FZ999
April	G0001 ~ G9999	H0001 ~ HZ999
May	J0001 ~ J9999	K0001 ~ KZ999
June	L0001 ~ L9999	M0001 ~ MZ999
July	N0001 ~ N9999	P0001 ~ PZ999
August	Q0001 ~ Q9999	R0001 ~ RZ999
September	S0001 ~ S9999	T0001 ~ TZ999
October	U0001 ~ U9999	V0001 ~ VZ999
November	W0001 ~ W9999	X0001 ~ XZ999
December	Y0001 ~ Y9999	Z0001 ~ ZZ999

* Alphabetical letters **"I"** and **"O"** are not used.

e.g.

- (a) WG972 - (b)(c) 8 B (d) A001
- (a) DF972 - (b)(c) 8 B (d) A001
- (a) DG972 - (b)(c) 8 B (d) A001

(a) Engine Model Name : **WG972**, **DF972**, **DG972**
(b) Year : **8** indicates **2008**
(c) Month : **A** or **B** indicates **January**
(d) Lot Number : (**0001 ~ 9999** or **A001 ~ Z999**)

9Y1210318GEG0003US0

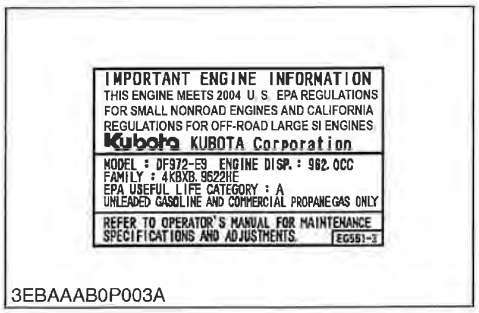

3EBAAAB0P003A

■ Emission Label

This label is attached on the cylinder head cover of the engine certified to the requirements of EPA / CARB Emission regulations.

The content of the label is approved officially by EPA / CARB.

9Y1210318GEG0004US0

Petitioner MWE Investments, LLC, et al.
Exhibit 1003, Page 817

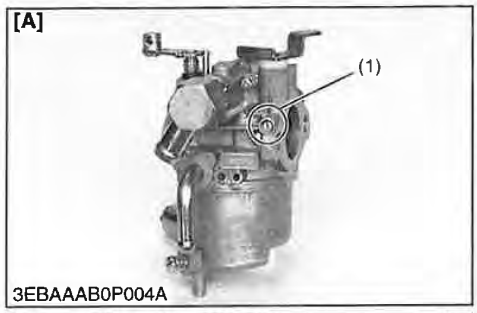

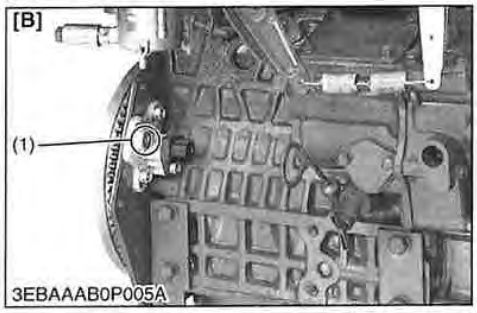

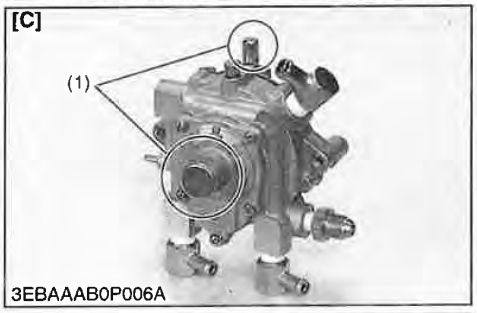

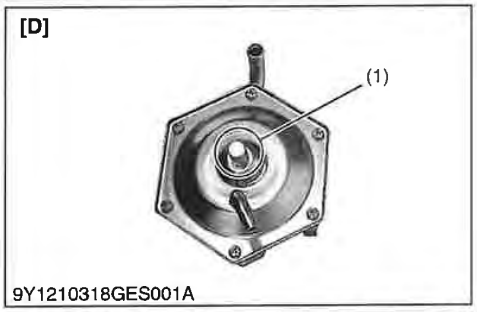

■ Tamper Resistance

KUBOTA Corporation is to provide safeguards for the parts where never to be adjusted, and is approved by EPA / CARB for the purpose of this engine to be in compliance with EPA / CARB Emission Regulations through its useful life. Intentional removal and adjustment of such tamper resistance are subject to the penalty.

(1) Tamper Resistance

[A] Carburetor
[B] Pick-up Sensor
[C] Vaporizer
[D] Regulator
[E] Governor Lever

9Y1210318GEG0005US0

Petitioner MWE Investments, LLC, et al.
Exhibit 1003, Page 818

[2] CYLINDER NUMBER

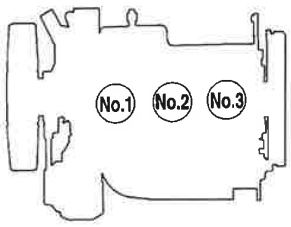

3EEACAA1P067A

The cylinder numbers of KUBOTA gasoline, gasoline / LPG and natural gas engine are designated as shown in the figure.

The sequence of cylinder numbers is given as No.1, No.2 and No.3 starting from the gear case side.

9Y1210318GEG0006US0

Petitioner MWE Investments, LLC, et al.
Exhibit 1003, Page 819

2. GENERAL PRECAUTIONS

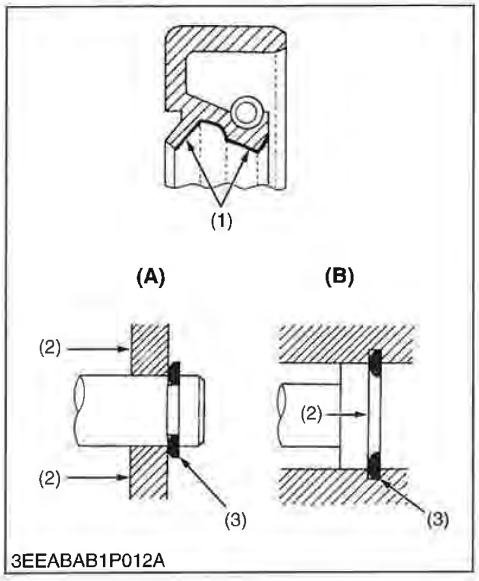

- During disassembly, carefully arrange removed parts in a clean area to prevent confusion later. Screws, bolts and nuts should be replaced in their original position to prevent reassembly errors.
- When special tools are required, use KUBOTA genuine special tools. Special tools which are not frequently used should be made according to the drawings provided.
- Before disassembling or servicing live wires, make sure to always disconnect the grounding cable from the battery first.
- Remove oil and dirt from parts before measuring.
- Use only KUBOTA genuine parts for parts replacement to maintain engine performance and to ensure safety.
- Gaskets and O-rings must be replaced during reassembly. Apply grease to new O-rings or oil seals before assembling.
- When reassembling external or internal snap rings, position them so that sharp edge faces against the direction from which a force is applied.
- Be sure to perform run-in the serviced or reassemble engine. Do not attempt to give heavy load at once, or serious damage may result to the engine.

(1) Grease
(2) Force
(3) Place the Sharp Edge the Direction of Force

(A) External Snap Ring
(B) Internal Snap Ring

9Y1210318GEG0007US0

Petitioner MWE Investments, LLC, et al.
Exhibit 1003, Page 820

3. MAINTENANCE CHECK LIST

To maintain long-lasting and safe engine performance, make it a rule to carry out regular inspections by following the table below. (The schedule applies to an engine in use under normal conditions.)

[WG972-E2, DF972-E2]

	Item	Service Interval						
		Daily	Every 50 hrs	Every 100 hrs	Every 200 hrs	Every 1 year	Every 1000 hrs	Every 2 years
	Checking engine oil level	☆						
	Checking and replenish coolant	☆						
	Checking air cleaner element	☆						
	Checking LPG tank setting condition	☆						
	Checking LPG fuel connector	☆						
	Cleaning air cleaner element		☆					
	Checking gasoline fuel hose and clamp bands		☆					
	Checking LPG fuel hose and clamp bands		☆					
	LPG fuel check		☆					
	Checking battery electrolyte level		☆					
	Cleaning spark plug			☆				
	Checking fuel filter			☆				
	Check fan belt tension and damage			☆				
	Changing engine oil		★		☆			
	Replacing oil filter cartridge		★		☆			
	Checking LPG tank setting condition				☆			
	Checking radiator hoses and clamp bands				☆			
*	Replacing air cleaner element					☆		
	Replacing gasoline fuel hose, clamp bands and fuel filter					☆		
	Cleaning fuel tank inside					☆		
	Cleaning carburetor					☆		
	Cleaning water jacket and radiator interior					☆		
	Replacing spark plug						☆	
	Checking coolant hose of LPG vaporizer						☆	
	Checking vacuum lock hose of LPG vaporizer						☆	
	Draining tar						☆	
	Checking valve clearance						☆	
	Cleaning cylinder head						☆	
	Checking valve seats						☆	
	Replacing intake air line							☆
	Replacing LPG fuel hose and clamp bands							☆
	Replacing coolant hose of LPG vaporizer							☆
	Replacing vacuum lock hose of LPG vaporizer							☆
	Checking primary chamber							☆
	Checking air tight of secondary chamber							☆
	Checking vacuum lock system							☆
	Replacing radiator hoses and clamp bands							☆
	Replacing battery							☆
	Changing radiator coolant (L.L.C.)							☆

★ Change engine oil and replace oil filter cartridge after the first 50 hours of operation.
* Replace the element after 6 times cleaning.

CAUTION

- **When changing or inspecting, be sure to level and stop the engine.**

9Y1210318GEG0008US0

Petitioner MWE Investments, LLC, et al.
Exhibit 1003, Page 821

[DG972-E2]

	Item	Service Interval						
		Daily	Every 50 hrs	Every 100 hrs	Every 200 hrs	Every 1 year	Every 1000 hrs	Every 2 years
	Checking engine oil level	☆						
	Checking and replenish coolant	☆						
	Checking air cleaner element	☆						
	Checking fuel line setting condition	☆						
	Checking fuel connector	☆						
	Cleaning air cleaner element		☆					
	Checking fuel hose and clamp bands		☆					
	Natural gas fuel check		☆					
	Checking battery electrolyte level		☆					
	Cleaning spark plug			☆				
	Checking fuel filter			☆				
	Check fan belt tension and damage			☆				
	Changing engine oil		★		☆			
	Replacing oil filter cartridge		★		☆			
	Checking fuel line setting condition				☆			
	Checking radiator hoses and clamp bands				☆			
*	Replacing air cleaner element					☆		
	Replacing fuel filter					☆		
	Cleaning gas mixer					☆		
	Cleaning water jacket and radiator interior					☆		
	Replacing spark plug						☆	
	Checking valve clearance						☆	
	Cleaning cylinder head						☆	
	Checking valve seats						☆	
	Replacing intake air line							☆
	Replacing fuel hose and clamp bands							☆
	Replacing radiator hoses and clamp bands							☆
	Replacing battery							☆
	Changing radiator coolant (L.L.C.)							☆

★ Change engine oil and replace oil filter cartridge after the first 50 hours of operation.
* Replace the element after 6 times cleaning.

CAUTION

- **When changing or inspecting, be sure to level and stop the engine.**

9Y1210318GEG0009US0

Petitioner MWE Investments, LLC, et al.
Exhibit 1003, Page 822

4. CHECK AND MAINTENANCE

[1] DAILY CHECK POINTS

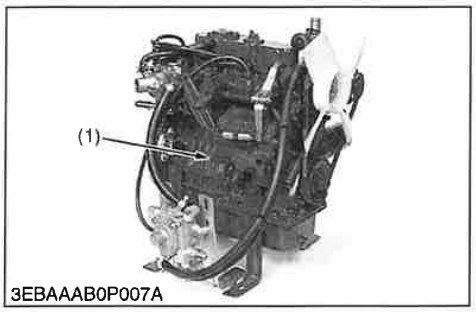

Checking Engine Oil Level

1. Level the engine.
2. To check the oil level, draw out the dipstick (1), wipe it clean, reinsert it, and draw it out again.
   Check to see that the oil level lies between the two notches.
3. If the level is too low, add new oil to the specified level.

■ **IMPORTANT**

- **When using an oil of different maker or viscosity from the previous one, drain old oil. Never mix two different types of oil.**
- **Use the proper SAE Engine oil according to ambient temperatures.**

■ **NOTE**

- **Be sure to inspect the engine, locating it on a horizontal place. If placed on gradients, accurately, oil quantity may not be measured.**
- **Be sure to keep the oil level between upper and lower limits of the dipstick. Too much oil may cause a drop in output or excessive blow-by gas. On the closed breather type engine in which mist is sucked through port, too much oil may caused oil hammer. While too little oil, may seize the engine's rotating and sliding parts.**

(1) Dipstick

9Y1210318GEG0010US0

Petitioner MWE Investments, LLC, et al.
Exhibit 1003, Page 823

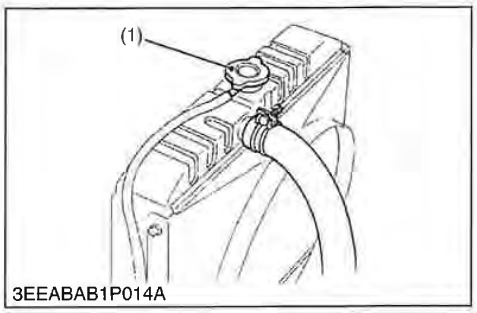

3EEABAB1P014A

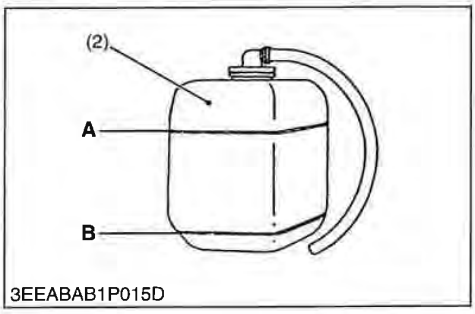

3EEABAB1P015D

Checking and Replenish Coolant

1. Without recovery tank :
   Remove the radiator cap (1) and check to see that the coolant level is just below the port.
   With recovery tank (2) :
   Check to see that the coolant level lies between **FULL"A"** and **LOW "B"**.
2. If coolant level is too low, check the reason for decreasing coolant.
   (Case 1)
   If coolant is decreasing by evaporation, replenish only fresh, soft water.
   (Case 2)
   If coolant is decreasing by leak, replenish coolant of the same manufacture and type in the specified mixture ratio (fresh, soft water and L.L.C.). If the coolant brand cannot be identified, drain out all of the remaining coolant and refill with a totally new brand of coolant mix.

CAUTION

- **Do not remove the radiator cap until coolant temperature is below its boiling point. Then loosen the cap slightly to relieve any excess pressure before removing the cap completely.**

IMPORTANT

- **During filling the coolant, air must be vented from the engine coolant passages. The air vents by jiggling the radiator upper and lower hoses.**
- **Be sure to close the radiator cap securely. If the cap is loose or improperly closed, coolant may leak out and the engine could overheat.**
- **Do not use an antifreeze and scale inhibitor at the same time.**
- **Never mix the different type or brand of L.L.C..**

(1) Radiator Cap
(2) Recovery Tank
A : FULL
B : LOW

9Y1210318GEG0011US0

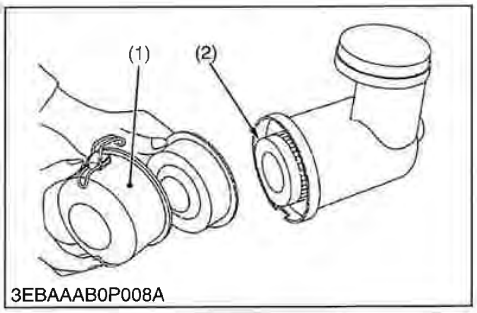

3EBAAAB0P008A

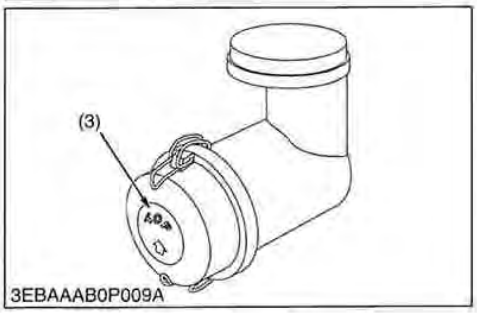

3EBAAAB0P009A

Checking Air Cleaner Element (If necessary)

1. Remove the dust cup in the air cleaner.
2. Check the dust in the dust cup and the element.

(When reassembling)

- Install the air cleaner dust cup with **"TOP"** indicated on the rear of the cup.

(1) Dust Cap
(2) Element
(3) **"TOP"** Mark

9Y1210318GEG0012US0

Petitioner MWE Investments, LLC, et al.
Exhibit 1003, Page 824

Checking LPG Tank Setting Condition (If necessary) (DF972-E2)

1. Check the setting condition of LPG fuel tank.

9Y1210318GEG0013US0

Checking Fuel Line Setting Condition (If necessary) (DG972-E2)

1. Check the setting condition of fuel line.

9Y1210318GEG0014US0

Checking LPG Fuel Connector (DF972-E2)

1. Check the connector of LPG line (hoses and clamps).

9Y1210318GEG0015US0

Checking Fuel Connector (DG972-E2)

1. Check the connector of fuel line (hoses and clamps).

9Y1210318GEG0016US0

[2] CHECK POINTS OF INTIAL 50 HOURS

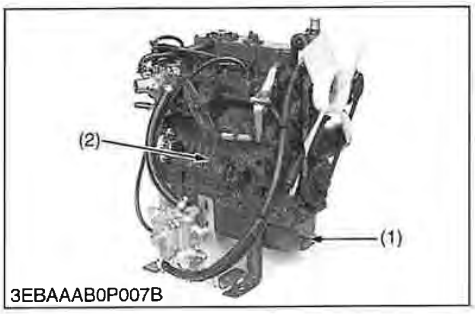

3EBAAAB0P007B

Changing Engine Oil

CAUTION

- **Be sure to stop engine before changing engine oil.**

1. Start and warm up the engine for approx. 5 minutes.
2. Place an oil pan underneath the engine.
3. To drain the used oil, remove the drain plug (1) at the bottom of the engine and drain the oil completely.
4. Screw the drain plug (1).
5. Fill new oil up to upper line on the dipstick (2).

■ **IMPORTANT**

- **When using an oil of different maker or viscosity from the previous one, remove all of the old oil.**
- **Never mix two different types of oil.**
- **Engine oil should have properties of API classification SH.**
- **Use the proper SAE Engine Oil according to ambient temperature.**

Above 25 °C (77 °F)	SAE30 or SAE10W-30
0 °C to 25 °C (32 °F to 77 °F)	SAE20 or SAE10W-30
Below 0 °C (32 °F)	SAE10W or SAE10W-30

Engine oil capacity	3.4 L 0.90 U.S.gals

Tightening torque	Drain plug	33 to 37 N·m 3.3 to 3.8 kgf·m 24 to 27 lbf·ft

(1) Drain Plug (2) Dipstick

9Y1210318GEG0017US0

Petitioner MWE Investments, LLC, et al.
Exhibit 1003, Page 825

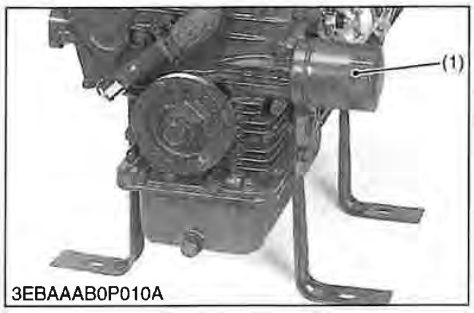

Replacing Oil Filter Cartridge

CAUTION

- **Be sure to stop the engine before changing filter cartridge.**

1. Remove the oil filter cartridge (1) with the filter wrench.
2. Apply a slight coat of oil onto the new cartridge gasket.
3. To install the new cartridge, screw it in by hand. Over tightening may cause deformation of rubber gasket.
4. After the new cartridge has been replaced, the engine oil normally decrease a little. Thus see that the engine oil does not leak through the seal and be sure to read the oil level on the dipstick. Then, replenish the engine oil up to the specified level.

IMPORTANT

- **To prevent serious damage to the engine, replacement element must be highly efficient. Use only a KUBOTA genuine filter or its equivalent.**

(1) Engine Oil Filter Cartridge

9Y1210318GEG0018US0

[3] CHECK POINTS OF EVERY 50 HOURS

Cleaning Air Cleaner Element

1. To clean the element, use clean dry compressed air on the inside of the element.
   Air pressure at the nozzle must be under 210 kPa (2.1 kgf/cm^2, 30 psi).
2. If the element is stained with carbon or oil, replace the element.

IMPORTANT

- **Make sure the wing bolt for the element is tight enough. If it is loose, dust and dirt may be sucked, wearing down the cylinder liner and piston ring earlier and thereby resulting in poor power output.**
- **Do not overservice the air cleaner element.**

NOTE

- **Replace the element once a year or every 6th cleaning.**

9Y1210318GEG0019US0

CAUTION

- **Stop the engine when attempting the check and replace prescribed below.**
- **Remember to check the fuel line periodically. The fuel line is subject to wear and aging, fuel may leak out onto the running engine, causing a fire.**

9Y1210318GEG0020US0

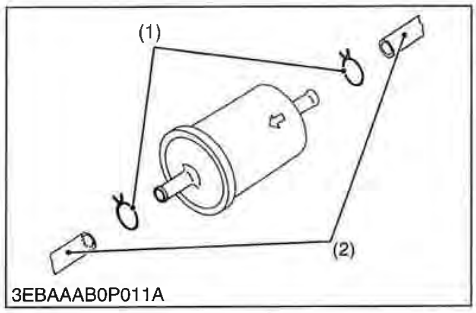

Checking Gasoline Fuel Hose and Clamp Bands (WG972-E2, DF972-E2)

Check the fuel hoses every 50 hours of operation.

1. Since the fuel hose (2) is made of rubber, it ages regardless of the period of service.
   Replace the fuel hose together with the clamp every two years.
2. However, if the fuel hose and clamp are found to be damaged or deteriorate earlier than two years, then replace or remedy.
3. After the fuel hose and the clamp have been replaced, bleed the fuel system.

(1) Clamp (2) Fuel Hose

9Y1210318GEG0021US0

Petitioner MWE Investments, LLC, et al.
Exhibit 1003, Page 826

Checking LPG Fuel Hose and Clamp Bands (DF972-E2)

■ **IMPORTANT**
- **Never test for gas leaks with a FLAME.**

■ **NOTE**
- **Check for fuel leakage with soapy water or gas-detector, if leakage is found, correct leakage or replace the hose.**

9Y1210318GEG0022US0

Checking Fuel Hose and Clamp Bands (DG972-E2)

■ **IMPORTANT**
- **Never test for gas leaks with a FLAME.**

■ **NOTE**
- **Check for fuel leakage with soapy water or gas-detector, if leakage is found, correct leakage or replace the hose.**

9Y1210318GEG0023US0

LPG Fuel Check

1. Open the shut off solenoid valve on the tank.
2. Check for
   a) Fuel tank to filter
   b) Filter to shut off solenoid valve
   c) Shut off solenoid valve to vaporizer

9Y1210318GEG0024US0

Natural Gas Fuel Check

1. Open the shut off solenoid valve on the tank.
2. Check for
   a) Fuel source to filter
   b) Filter to shut off solenoid valve
   c) Shut off solenoid valve to regulator

9Y1210318GEG0025US0

Checking Battery Electrolyte Level

1. Check the battery electrolyte level.
2. If the level is below than lower level line, add the distilled water to pour level of each cell.

⚠ **CAUTION**
- **Never remove the vent plugs while the engine is running.**
- **Keep electrolyte away from eyes, hands and clothes. If you are spattered with it, wash it away completely with water immediately and get medical attention.**
- **Wear eye protection and rubber gloves when working around battery.**

9Y1210318GEG0026US0

Petitioner MWE Investments, LLC, et al.
Exhibit 1003, Page 827

[4] CHECK POINTS OF EVERY 100 HOURS

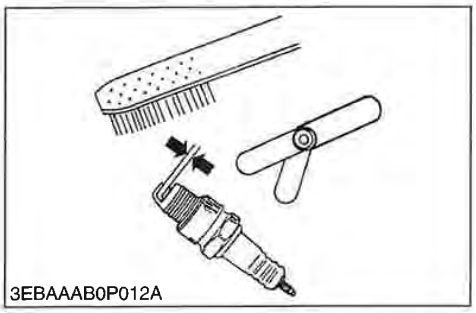
3EBAAAB0P012A

Cleaning Spark Plug Gap

1. Remove the spark plug, and remove carbon from the electrode with a wire brush or other tools.
2. Measure the spark plug gap with a feeler gauge, and repair or replace the plug if the measured gap differs from the factory specification.
3. Replace the plug if the electrode or the insulator is deformed or cracked.
4. Tighten the plug with a plug wrench.

Spark plug gap	Factory spec.	0.60 to 0.70 mm 0.024 to 0.027 in.

Spark plug	NGK BKR4E

Tightening torque	Spark plug	20 to 24 N·m 2.0 to 2.5 kgf·m 15 to 18 lbf·ft

9Y1210318GEG0027US0

Checking Fuel Filter

1. Check the fuel filter.
2. If the fuel filter is dirty, clean it or replace it.

CAUTION

- **Stop the engine when attempting to check and clean the fuel filter.**
- **Gasoline fuel is extremely flammable, so avoid fires.**

9Y1210318GEG0028US0

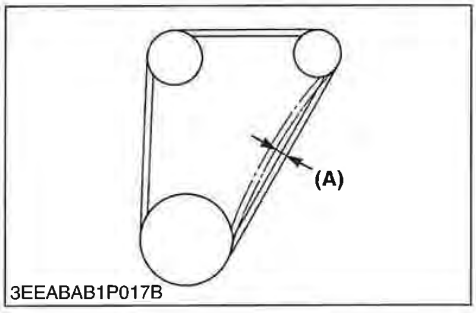

3EEABAB1P017B

Fan Belt Tension

1. Measure the deflection **(A)**, depressing the belt halfway between the fan drive pulley and alternator pulley at specified force 98 N (10 kgf, 22 lbf).
2. If the measurement is not within the factory specifications, loosen the alternator mounting screws and relocate the alternator to adjust.

Deflection **(A)**	Factory spec.	7.0 to 9.0 mm 0.28 to 0.35 in

(A) Deflection

9Y1210318GEG0001US0

Petitioner MWE Investments, LLC, et al.
Exhibit 1003, Page 828

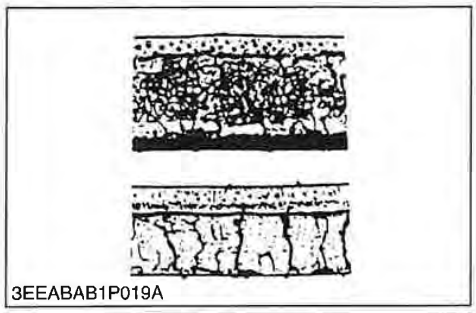
3EEABAB1P019A

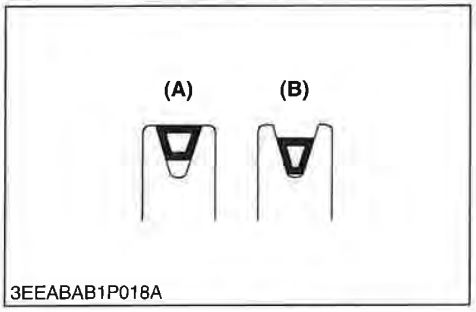

3EEABAB1P018A

Fan Belt Damage and Wear

1. Check the fan belt for damage.
2. If the fan belt is damaged, replace it.
3. Check if the fan belt is worn and sunk in the pulley groove.
4. If the fan belt is nearly worn out and deeply sunk in the pulley groove, replace it.

(A) Good **(B) Bad**

9Y1210318GEG0002US0

[5] CHECK POINTS OF EVERY 200 HOURS

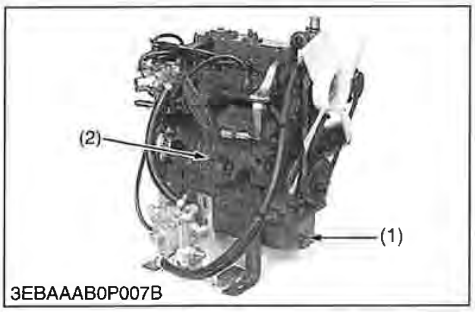

3EBAAAB0P007B

Changing Engine Oil

CAUTION

- **Be sure to stop engine before changing engine oil.**

1. Start and warm up the engine for approx. 5 minutes.
2. Place an oil pan underneath the engine.
3. To drain the used oil, remove the drain plug (1) at the bottom of the engine and drain the oil completely.
4. Screw the drain plug (1).
5. Fill new oil up to upper line on the dipstick (2).

IMPORTANT

- **When using an oil of different maker or viscosity from the previous one, remove all of the old oil.**
- **Never mix two different types of oil.**
- **Engine oil should have properties of API classification SH.**
- **Use the proper SAE Engine Oil according to ambient temperature.**

Above 25 °C (77 °F)	SAE30 or SAE10W-30
0 °C to 25 °C (32 °F to 77 °F)	SAE20 or SAE10W-30
Below 0 °C (32 °F)	SAE10W or SAE10W-30

Engine oil capacity	3.4 L 0.90 U.S.gals

Tightening torque	Drain plug	33 to 37 N·m 3.3 to 3.8 kgf·m 24 to 27 lbf·ft

(1) Drain Plug (2) Dipstick

9Y1210318GEG0029US0

Petitioner MWE Investments, LLC, et al.
Exhibit 1003, Page 829

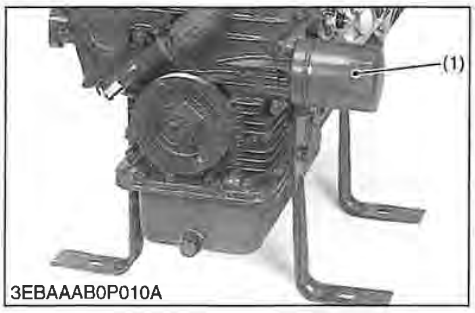

3EBAAAB0P010A

Replacing Engine Oil Filter Cartridge

CAUTION

- **Be sure to stop the engine before changing filter cartridge.**

1. Remove the oil filter cartridge (1) with the filter wrench.
2. Apply a slight coat of oil onto the new cartridge gasket.
3. To install the new cartridge, screw it in by hand. Over tightening may cause deformation of rubber gasket.
4. After the new cartridge has been replaced, the engine oil normally decrease a little. Thus see that the engine oil does not leak through the seal and be sure to read the oil level on the dipstick. Then, replenish the engine oil up to the specified level.

IMPORTANT

- **To prevent serious damage to the engine, replacement element must be highly efficient. Use only a KUBOTA genuine filter or its equivalent.**

(1) Engine Oil Filter Cartridge

9Y1210318GEG0030US0

Checking LPG Tank Setting Condition (DF972-E2)

1. Check the setting condition of LGP fuel tank.

9Y1210318GEG0031US0

Checking Fuel Line Setting Condition (DG972-E2)

1. Check the setting condition of fuel line.

9Y1210318GEG0032US0

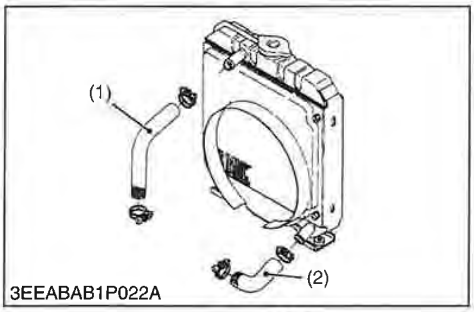

3EEABAB1P022A

Checking Radiator Hoses and Clamp Bands

1. Check to see if the radiator hoses are properly fixed every 200 hours of operation or every six months, whichever comes first.
2. If the clamp is loose, apply oil to the threads and retighten it securely.
3. The coolant hose is made of rubber and tends to age. It must be replaced every two years. Also replace the clamp and tighten it securely.

(1) Upper Hose (2) Lower Hose

9Y1210318GEG0033US0

[6] CHECK POINTS OF EVERY 1 YEAR

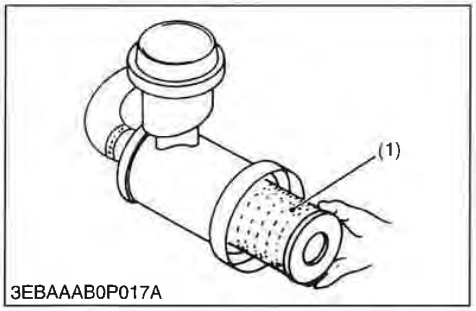

3EBAAAB0P017A

Replacing Air Cleaner Element

1. Remove the dust cup from the air cleaner.
2. After cleaning the dust cup, remove the air cleaner element.
3. Replace the new air cleaner element.

(1) Air Cleaner Element

9Y1210318GEG0034US0

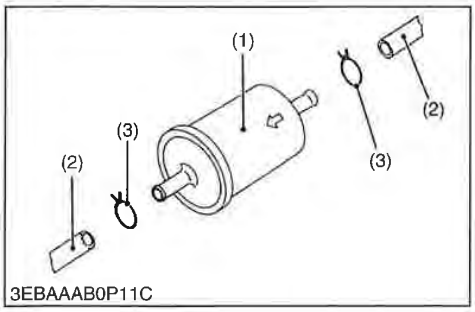

3EBAAAB0P11C

Replacing Gasoline Fuel Hose, Clamp Bands and Fuel Filter (WG972-E2, DF972-E2)

1. Close the fuel tank cock.
2. Replace the fuel filter (1) with a new one.
3. Replace the hose (2) and clamp (3).

(1) Fuel Filter (3) Clamp
(2) Fuel Hose

9Y1210318GEG0035US0

Petitioner MWE Investments, LLC, et al.
Exhibit 1003, Page 830

Replacing Fuel Filter (DG972-E2)

1. Close the fuel line.
2. Replace the fuel filter with a new one.

9Y1210318GEG0036US0

Cleaning Fuel Tank Inside (for Gasoline Fuel)

1. Following the unit / machine's operators manual, drain the gasoline fuel in the fuel tank.
2. Clean the fuel tank inside.

9Y1210318GEG0037US0

Cleaning Carburetor (WG972-E2, DF972-E2)

1. Clean and check for leakage.
2. Check throttle plate for dirt.

9Y1210318GEG0038US0

Cleaning Gas Mixer (DG972-E2)

1. Clean and check for leakage.
2. Check throttle plate for dirt.

9Y1210318GEG0039US0

Petitioner MWE Investments, LLC, et al.
Exhibit 1003, Page 831

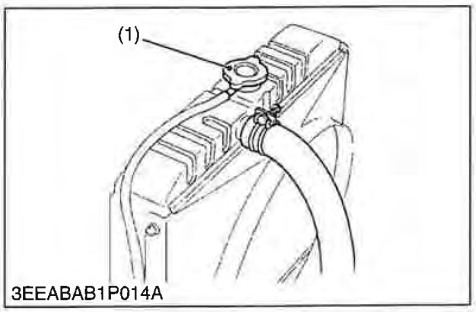

3EEABAB1P014A

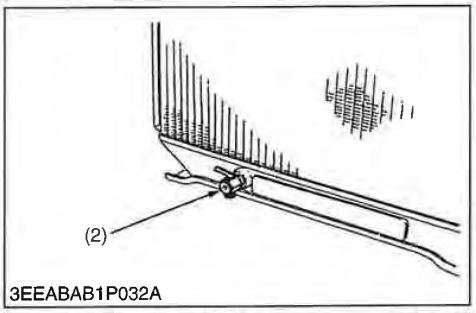

3EEABAB1P032A

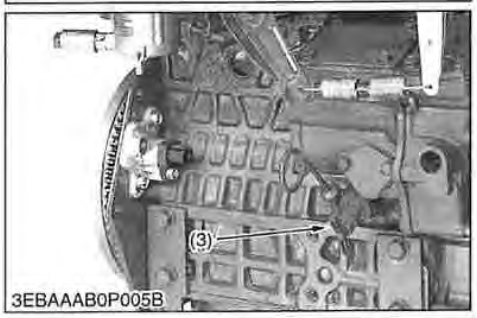

3EBAAAB0P005B

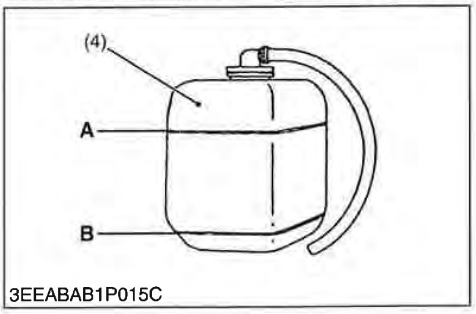

3EEABAB1P015C

Cleaning Water Jacket and Radiator Interior

CAUTION

- **Do not remove the radiator cap when the engine is hot. Then loosen cap slightly to the stop to relieve any excess pressure before removing cap completely.**

1. Stop the engine and let cool down.
2. To drain the coolant, open the radiator drain plug (2) and remove the radiator cap (1). Then radiator cap (1) must be removed to completely drain the coolant. And open the drain cock (3) of engine body.
3. After all coolant is drained, close the drain plug.
4. Fill with clean water and cooling system cleaner.
5. Follow directions of the cleaner instruction.
6. After flushing, fill with clean water and anti-freeze until the coolant level is just below the port. Install the radiator cap (1) securely.
7. Fill with coolant up to **FULL "A"** mark on the recovery tank (4).
8. Start and operate the engine for few minutes.
9. Stop the engine and let cool. Check coolant level of recovery tank (4) and add coolant if necessary.

IMPORTANT

- **Do not start engine without coolant.**
- **Use clean, fresh, soft water and anti-freeze to fill the radiator and recovery tank.**
- **When the anti-freeze is mixed with fresh, soft water, the anti-freeze mixing ratio must be less than 50 %.**
- **Securely tighten radiator cap. If the cap is loose or improperly fitted, water may leak out and the engine could overheat.**

(1) Radiator Cap
(2) Drain Plug
(3) Drain Cock
(4) Recovery Tank

A : FULL
B : LOW

9Y1210318GEG0040US0

Petitioner MWE Investments, LLC, et al.
Exhibit 1003, Page 832

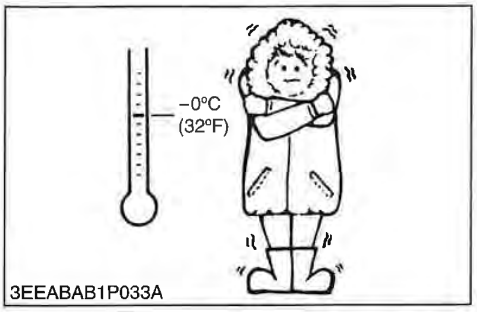

Anti-Freeze

- There are two types of anti-freeze available: use the permanent type (PT) for this engine.
- Before adding anti-freeze for the first time, clean the radiator interior by pouring fresh, soft water and draining it a few times.
- The procedure for mixing water and anti-freeze differs according to the make of the anti-freeze and the ambient temperature. Basically, it should be referred to SAE J1034 standard, more specifically also to SAE J814c.
- Mix the anti-freeze with fresh, soft water, and then fill into the radiator.

■ **IMPORTANT**

- **When the anti-freeze is mixed with fresh, soft water, the anti-freeze mixing ratio must be less than 50 %.**

Vol % anti-freeze	Freezing point		Boiling point*	
	°C	°F	°C	°F
40	−24	−11	106	223
50	−37	−35	108	226

* At 1.01 × 100000 Pa (760 mmHg) pressure (atmospheric). A higher boiling point is obtained by using a radiator pressure cap which permits the development of pressure within the cooling system.

■ **NOTE**

- **The above data represents industrial standards that necessitate a minimum glycol content in the concentrated anti-freeze.**
- **When the coolant level drops due to evaporation, add fresh, soft water only to keep the anti-freeze mixing ratio less than 50 %. In case of leakage, add anti-freeze and fresh, soft water in the specified mixing ratio.**
- **Anti-freeze absorbs moisture. Keep unused anti-freeze in a tightly sealed container.**
- **Do not use radiator cleaning agents when anti-freeze has been added to the coolant.**
  (Anti-freeze contains an anti-corrosive agent, which will react with the radiator cleaning agent forming sludge which will affect the engine parts.)

9Y1210318GEG0041US0

[7] CHECK POINTS OF EVERY 1000 HOURS

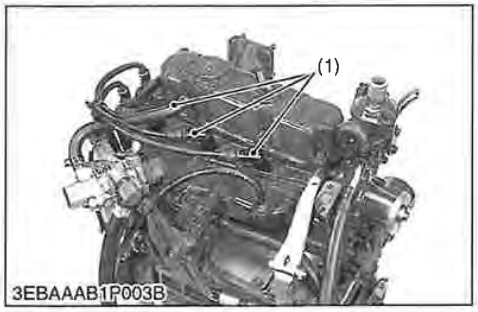

Replacing Spark Plug

1. Disconnect the spark plug cap (1).
2. Remove the spark plug.
3. Replace the new spark plug.

Tightening torque	Spark plug	20 to 24 N·m 2.0 to 2.5 kgf·m 15 to 18 lbf·ft

(1) Spark Plug Cap

9Y1210318GEG0042US0

Petitioner MWE Investments, LLC, et al.
Exhibit 1003, Page 833

Checking Coolant Hose of LPG Vaporizer (DF972-E2)

1. Check the coolant hoses (1) for damage.
2. If the coolant hose is damaged, replace it.

(1) Coolant Hoses to Vaporizer

9Y1210318GEG0043US0

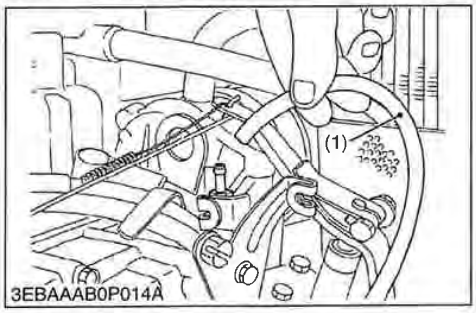

Checking Vacuum Lock Hose of LPG Vaporizer (DF972-E2)

1. Check the vacuum lock hose (1) for damage.
2. If the hose is damaged, replace it.

(1) Vacuum Lock Hoses

9Y1210318GEG0044US0

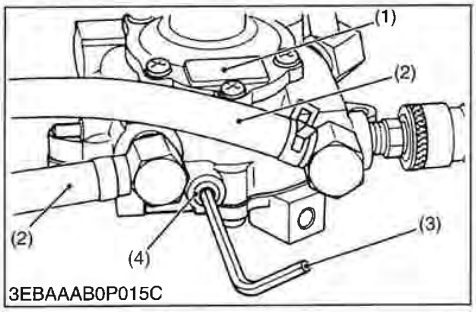

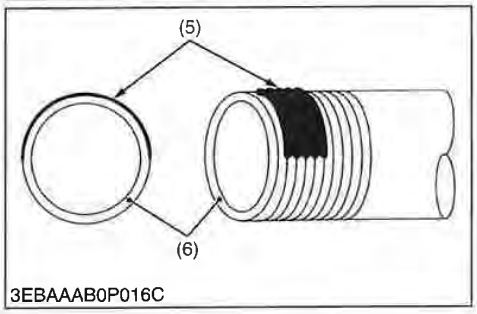

Draining Tar (Vaporizer for DF972-E2)

1. Run the engine until it is warmed up.
2. The shut off solenoid valve is shut and the engine is stopped naturally.
3. Place an oil pan underneath the drain port.
4. Remove the drain plug (4), and drain tar.
5. Tighten the plug.

■ **NOTE**

- **Apply a liquid gasket (Three Bond 1104 or equivalent) to the thread of the plug.**

(1) Vaporizer
(2) Coolant Hose
(3) Wrench
(4) Drain Plug
(5) Liquid Gasket
(6) Joint

9Y1210318GEG0045US0

Petitioner MWE Investments, LLC, et al.
Exhibit 1003, Page 834

3EEACAA1P061A

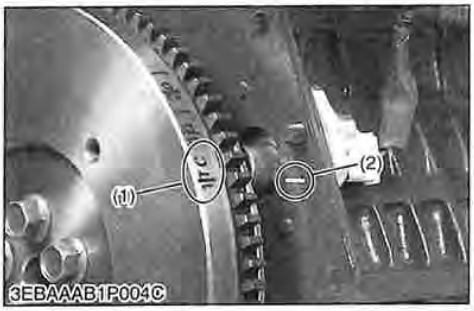

3EBAAAB1P004C

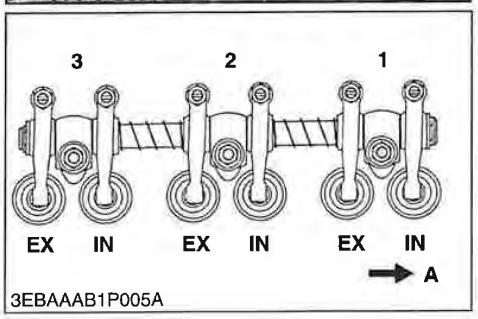

3EBAAAB1P005A

Checking Valve Clearance

■ **IMPORTANT**

- **The valve clearance must be checked and adjusted when engine is cold.**

1. Remove the cylinder head cover and the spark plugs.
2. Align the **"1TC"** mark (1) on the flywheel and alignment mark (2) on the rear end plate so that the No. 1 piston comes to the compression top dead center.
3. Check the following valve clearance marked with "★" using a feeler gauge.
4. If the clearance is not within the factory specifications, adjust with the adjusting screw.
5. Then turn the flywheel 6.28 rad (360 °), and align the **"1TC"** mark (1) on the flywheel and alignment mark (2) on the rear end plate so that the No. 1 piston comes to the overlap position.
6. Check the following valve clearance marked with "☆" using a feeler gauge.
7. If the clearance is not within the factory specifications, adjust with the adjusting screw.

Adjustable Cylinder Location of Piston	Valve Arrangement	
	Intake valve	Exhaust valve
No. 1	★	★
No. 2	☆	★
No. 3	★	☆

★ : When No. 1 piston is at the compression top dead center position.
☆ : When No. 1 piston is at the overlap position.

Intake and exhaust valve clearance (cold)	Factory spec.	0.145 to 0.185 mm 0.00571 to 0.00728 in.

■ **NOTE**

- **The sequence of cylinder numbers is given as No. 1, No. 2 and No. 3 starting from the gear case side.**
- **After adjusting the valve clearance, secure the adjusting screw with the lock nut.**

(1) **"1TC"** Mark
(2) Alignment Mark

A : Gear Case Side

9Y1210318GEG0046US0

Cleaning Cylinder Head

1. Remove the carbon from cylinder head with a wire brush or their tools.

■ **NOTE**

- **Do not scratch the cylinder head with a wire brush.**

9Y1210318GEG0047US0

Petitioner MWE Investments, LLC, et al.
Exhibit 1003, Page 835

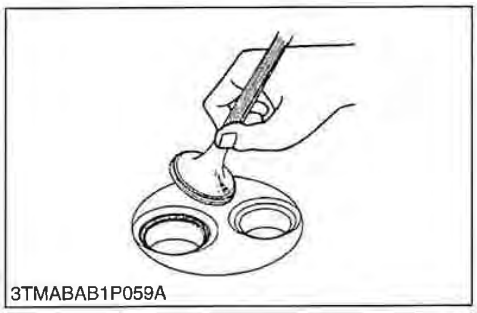
3TMABAB1P059A

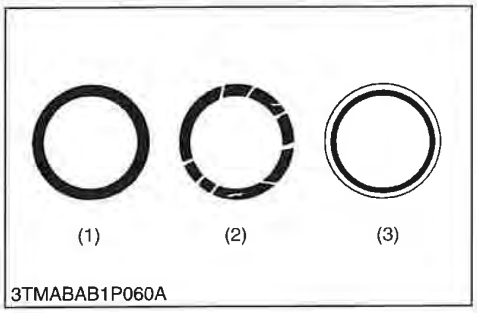

3TMABAB1P060A

Checking Valve Seats

1. Coat the valve face lightly with prussian blue and put the valve on its seat to check the contact.
2. If the valve does not seat all the way around the valve seat or the valve contact is less than 70 %, correct the valve seating as follows.
3. If the valve contact does not comply with the reference value, replace the valve or correct the contact of valve seating.

Valve seat width	Factory spec.	2.12 mm 0.0835 in.

(1) Correct
(2) Incorrect
(3) Incorrect

9Y1210318GEG0048US0

[8] CHECK POINTS OF EVERY 2 YEARS

Replacing Intake Air Line

1. Replace the intake hose and the clamps between the air cleaner and the carburetor or gas mixer.

9Y1210318GEG0049US0

Replacing LPG Fuel Hose and Clamp Bands (DF972-E2)

1. Replace the fuel hose and the clamps.

9Y1210318GEG0050US0

Replacing Fuel Hose and Clamp Bands (DG972-E2)

1. Replace the fuel hose and the clamps.

9Y1210318GEG0051US0

Replacing Coolant Hose of LPG Vaporizer (DF972-E2)

1. Connect the new coolant hose (1) and (2) to the vaporizer (3).
2. Hold the joint of vaporizer upward.
3. The coolant replenished to radiator, and bleed the air from the vaporizer (3).

(1) Coolant Hose
(2) Coolant Hose
(3) Vaporizer

A : Joint

9Y1210318GEG0052US0

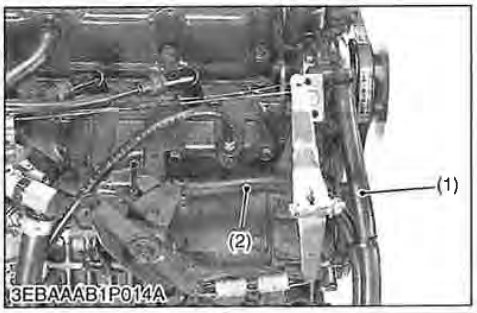

3EBAAAB1P014A

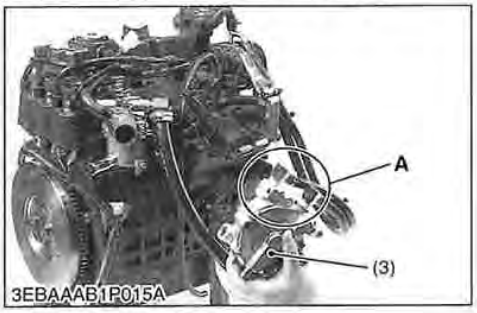

3EBAAAB1P015A

Petitioner MWE Investments, LLC, et al.
Exhibit 1003, Page 836

Replacing Vacuum Lock Hose of LPG Vaporizer (DF972-E2)

1. Connect the new vacuum lock hose (1).

(1) Vacuum Lock Hose

9Y1210318GEG0053US0

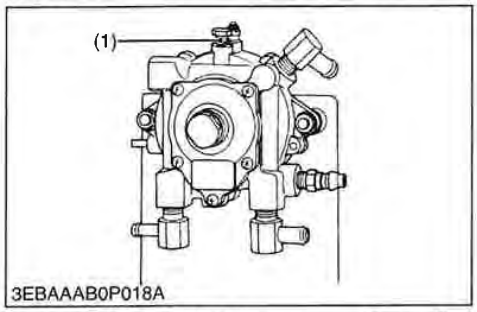

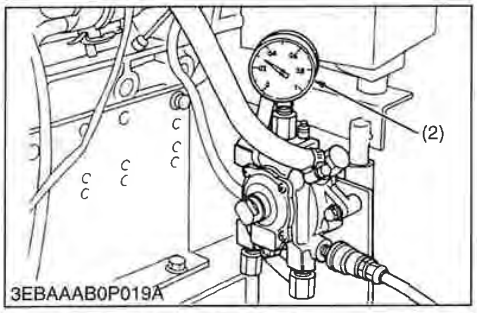

Checking Primary Chamber (DF972-E2)

■ **IMPORTANT**
- **When checking the fuel system after completely consuming the fuel in piping.**
- **Treat a seal tape or liquid gasket when install each connector.**

1. Run the engine until is warmed up.
2. Shut a shut off solenoid valve and the engine stopped naturally.
3. Disconnect the plug (1).
4. Set the pressure gauge (2).
5. Open a shut off solenoid valve and the engine is started.
6. Check the pressure.
7. If the pressure is not within the factory specification, replace the vaporizer.

Pressure	Factory spec.	30 to 34 kPa 0.30 to 0.35 kgf/cm^2 4.3 to 4.9 psi

(1) Plug (2) Pressure Gauge

9Y1210318GEG0054US0

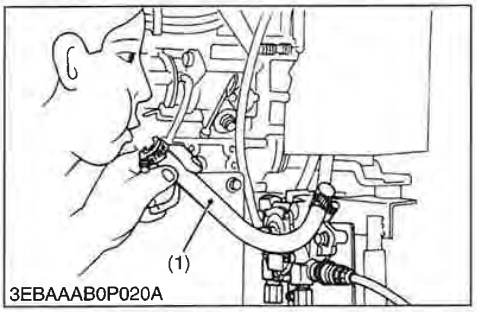

Checking Air Tight of Secondary Chamber (DF972-E2)

1. Disconnect the vapor hose (1) from the mixer side.
2. Blow a breath lightly or compressed air (9.8 kPa, 0.10 kgf/cm^2, 1.4 psi).
3. Make sure that there is no air leak.
4. If there is a leakage, replace the vaporizer.

(1) Vapor Hose

9Y1210318GEG0055US0

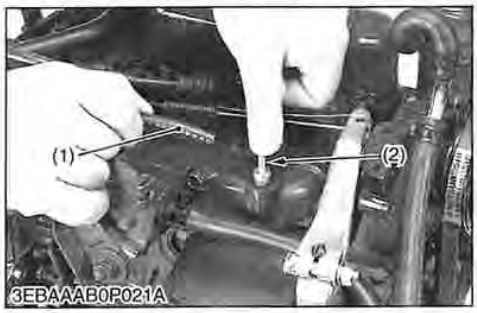

Checking Vacuum Lock System (DF972-E2)

1. After warming up, and set the low idling speed.
2. Disconnect the vacuum lock hose (1), and close the joint manifold by finger.
3. Make sure that the engine stops.

(1) Vacuum Lock Hose (2) Joint

9Y1210318GEG0056US0

Petitioner MWE Investments, LLC, et al.
Exhibit 1003, Page 837

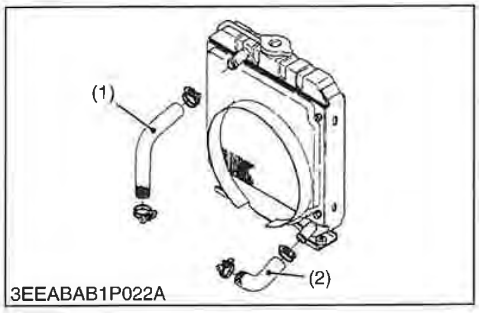

Replacing Radiator Hoses and Clamp Bands

CAUTION

- **Do not remove the radiator cap when the engine is hot. Then loosen cap slightly to the stop to relieve any excess pressure before removing cap completely.**

1. Drain the coolant.
2. Loosen the clamp bands.
3. Remove the upper hose (1) and lower hose (2).
4. Replace new upper / lower hose (1), (2) and clamp bands.
5. Tighten the clamp bands.
6. Fill with clean water and anti-freeze until the coolant level is just below the port. Install the radiator cap securely.

(1) Upper Hose (2) Lower Hose

9Y1210318GEG0057US0

Replacing Battery

CAUTION

- **When the battery is being activated, hydrogen and oxygen gases in the battery are extremely explosive. Keep open sparks and flames away from the battery at all times, especially when charging the battery.**
- **When charging battery, remove battery vent plugs.**
- **When disconnecting the cable from the battery, start with the negative terminal first. When connecting the cable to the battery, start with the positive terminal first.**
- **Never check battery charge by placing a metal object across the posts.**

1. Disconnect the negative terminal and positive terminal.
2. Remove the battery holder.
3. Remove the used battery.
4. Replace the new battery.
5. Tighten the battery holder.
6. Connect the positive terminal.
7. Connect the negative terminal.

9Y1210318GEG0058US0

Petitioner MWE Investments, LLC, et al.
Exhibit 1003, Page 838

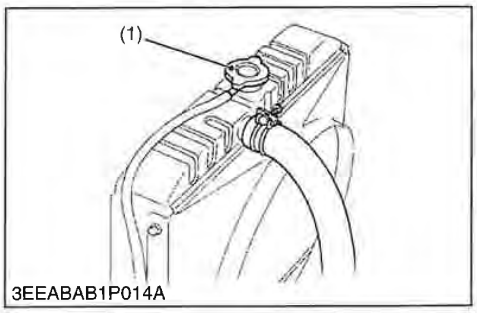

3EEABAB1P014A

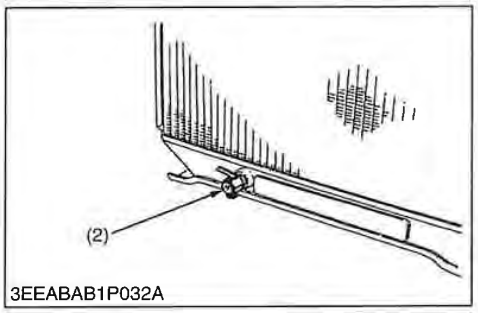

3EEABAB1P032A

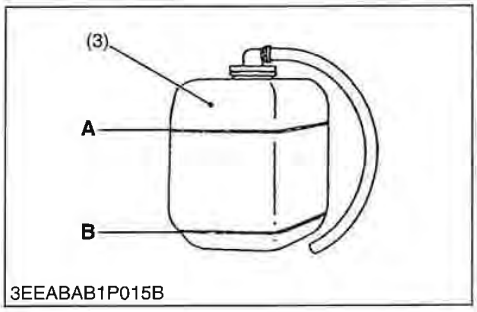

3EEABAB1P015B

Changing Radiator Coolant (L.L.C.)

CAUTION

- **Do not remove the radiator cap when the engine is hot. Then loosen cap slightly to the stop to relieve any excess pressure before removing cap completely.**

1. Stop the engine and let cool down.
2. To drain the coolant, open the radiator drain plug (2) and remove the radiator cap (1). Then radiator (1) must be removed to completely drain the coolant. And open the drain cock of engine body.
3. After all coolant is drained, close the drain plug.
4. Fill with clean water and cooling system cleaner.
5. Follow directions of the cleaner instruction.
6. After flushing, fill with clean water and anti-freeze until the coolant level is just below the port. Install the radiator cap (1) securely.
7. Fill with coolant up to **FULL"A"** mark on the recovery tank (3).
8. Start and operate the engine for few minutes.
9. Stop the engine and let cool. Check coolant level of radiator and recovery tank (3) and add coolant if necessary.

IMPORTANT

- **Do not start engine without coolant.**
- **Use clean, fresh, soft water and anti-freeze to fill the radiator and recovery tank.**
- **When the anti-freeze is mixed with fresh, soft water, the anti-freeze mixing ratio must be less than 50 %.**
- **Securely tighten radiator cap. If the cap is loose or improperly fitted, water may leak out and the engine could overheat.**

(1) Radiator Cap
(2) Drain Plug
(3) Recovery Tank

A : Full
B : Low

(To be continued)

Petitioner MWE Investments, LLC, et al.
Exhibit 1003, Page 839

(Continued)

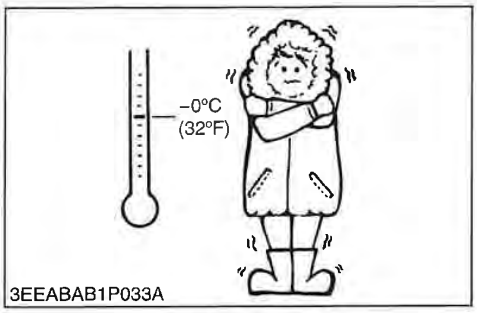

(Anti-freeze)

- There are two types of anti-freeze available; use the permanent type (PT) for this engine.
- Before adding anti-freeze for the first time, clean the radiator interior by pouring fresh, soft water and drain it a few times.
- The procedure for mixing water and anti-freeze differs according to the make of the anti-freeze and the ambient temperature. Basically, it should be referred to SAE J1034 standard, more specifically also to SAE J814c.
- Mix the anti-freeze with fresh, soft water, and then fill into the radiator.

■ **IMPORTANT**

- **When the anti-freeze is mixed with fresh, soft water, and anti-freeze mixing ratio must be less than 50 %.**

Vol % anti-freeze	Freezing point		Boiling point*	
	°C	°F	°C	°F
40	−24	−11	106	223
50	−37	−35	108	226

* At 1.01 x 100000 Pa (760 mmHg) pressure (atmospheric). A higher boiling point is obtained by using a radiator pressure cap which permits the development of pressure within the cooling system.

■ **NOTE**

- **The above data represents industrial standards that necessitate a minimum glycol content in the concentrated anti-freeze.**
- **When the coolant level drops due to evaporation, add fresh, soft water only to keep the anti-freeze mixing ratio less than 50 %. In case of leakage, add anti-freeze and fresh, soft water in the specified mixing ratio.**
- **Anti-freeze absorbs moisture. Keep unused anti-freeze in a tightly sealed container.**
- **Do not use radiator cleaning agents when anti-freeze has been added to the coolant.**
  (Anti-freeze contains an anti-corrosive agent, which will react with the radiator cleaning agent forming sludge which will affect the engine parts.)

9Y1210318GEG0059US0

Petitioner MWE Investments, LLC, et al.
Exhibit 1003, Page 840

5. SPECIAL TOOLS

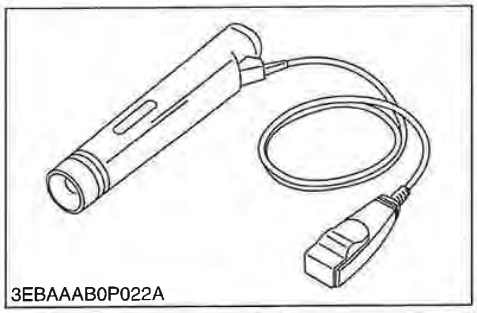

3EBAAAB0P022A

Timing Light

Application

- Use to adjust the ignition timing.

WSM000001GEG0089US0

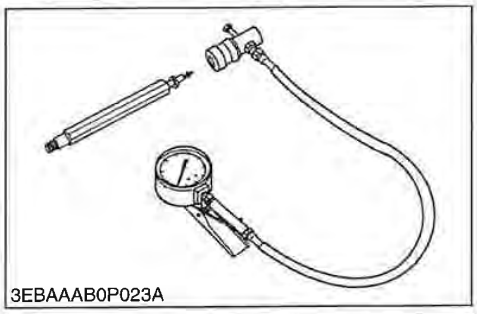

3EBAAAB0P023A

Compression Tester

Code No.

- 07909-30251

Application

- Use to measure gasoline engine compression and diagnose the engine for a major overhaul.

WSM000001GEG0088US0

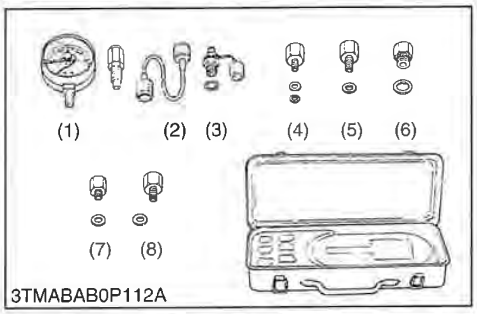

3TMABAB0P112A

Oil Pressure Tester

Code No.

- 07916-32032

Application

- Use to measure lubricating oil pressure

(1)	Gauge	(5)	Adaptor **2**
(2)	Cable	(6)	Adaptor **3**
(3)	Threaded Joint	(7)	Adaptor **4**
(4)	Adaptor **1**	(8)	Adaptor **5**

WSM000001GEG0015US0

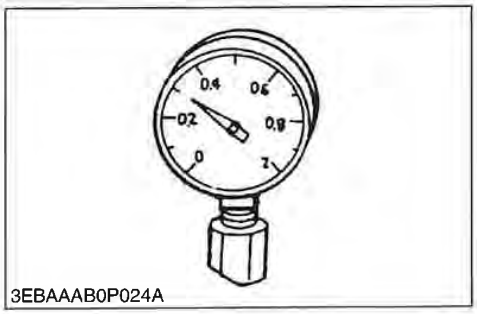

3EBAAAB0P024A

Pressure Gauge

Specification

- 98 kPa (1.0 kgf/cm^2, 14 psi)

Application

- Check the pressure of vaporizer

WSM000001GEG0090US0

Petitioner MWE Investments, LLC, et al.
Exhibit 1003, Page 841

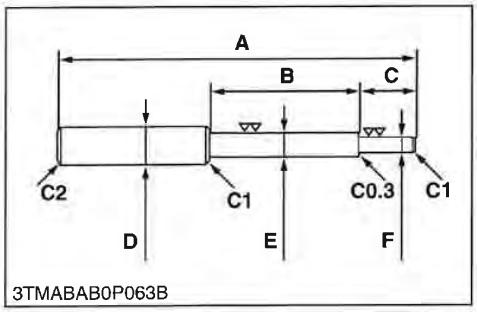

3TMABAB0P063B

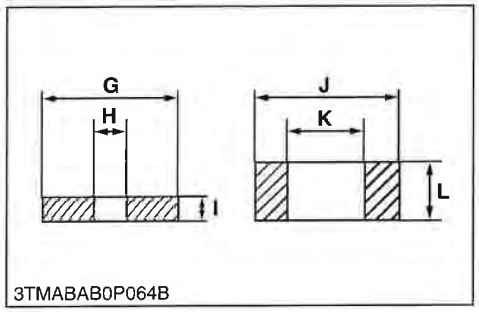

3TMABAB0P064B

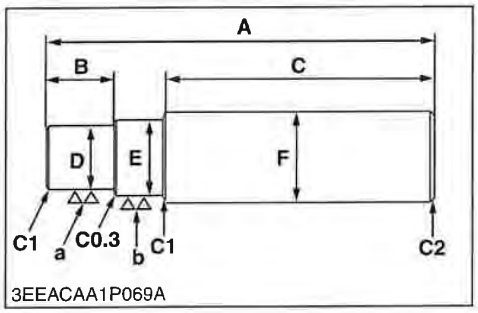

3EEACAA1P069A

Valve Guide Replacing Tool

Application

- Use to press out and press fit the valve guide.

A	200 mm (7.87 in.)
B	80 mm (3.1 in.)
C	40 mm (1.6 in.)
D	20 mm dia. (0.79 in. dia.)
E	9.960 to 9.980 mm dia. (0.3922 to 0.3929 in. dia.)
F	5.50 to 5.70 mm dia. (0.217 to 0.224 in. dia.)
G	15 mm (0.59 in.)
H	6.00 to 6.10 mm dia. (0.237 to 0.240 in. dia.)
I	5 mm (0.2 in.)
J	18 mm dia. (0.71 in. dia.)
K	10.6 to 10.7 mm dia. (0.418 to 0.421 in. dia.)
L	7 mm (0.3 in.)
C1	Chamfer 1.0 mm (0.039 in.)
C2	Chamfer 2.0 mm (0.079 in.)
C0.3	Chamfer 0.3 mm (0.01 in.)

9Y1210318GEG0060US0

Bushing Replacing Tool

Application

- Use to press out and to press fit the bushing.

[For small end bushing]

A	145 mm (5.71 in.)
B	20 mm (0.79 in.)
C	100 mm (3.94 in.)
D	19.90 to 19.95 mm (0.7835 to 0.7854 in.)
E	21.90 to 21.95 mm dia. (0.8622 to 0.8641 in. dia.)
F	25 mm (0.98 in.)
a	6.3 µm (250 µin.)
b	6.3 µm (250 µin.)

[For idle gear bushing]

A	150 mm (5.91 in.)
B	20 mm (0.79 in.)
C	100 mm (3.94 in.)
D	19.90 to 19.95 mm (0.7835 to 0.7854 in.)
E	21.90 to 21.95 mm dia. (0.8622 to 0.8641 in. dia.)
F	25 mm (0.98 in.)
a	6.3 µm (250 µin.)
b	6.3 µm (250 µin.)

9Y1210318GEG0061US0

Petitioner MWE Investments, LLC, et al.
Exhibit 1003, Page 842

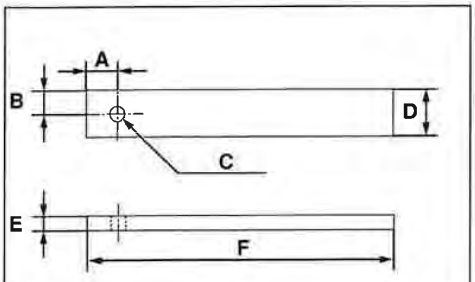

3TMABAB0P067E

Flywheel Stopper

Application

- Use to loosen and tighten the flywheel screw.

A	20 mm (0.79 in.)
B	15 mm (0.59 in.)
C	10 mm dia. (0.39 in. dia.)
D	30 mm (1.2 in.)
E	8 mm (0.3 in.)
F	200 mm (7.87 in.)

9Y1210318GEG0062US0

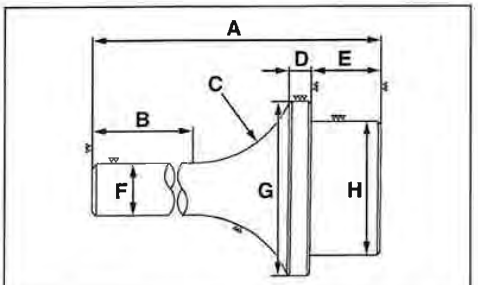

3GFABAB0P041A

Crankshaft Bearing 1 Replacing Tool

Application

- Use to press out and press fit the crankshaft bearing 1.

[Press Out]

A	135 mm (5.31 in.)
B	72 mm (2.8 in.)
C	40 mm radius (1.6 in. radius)
D	10 mm (0.39 in.)
E	22 mm (0.87 in.)
F	20 mm dia. (0.79 in. dia.)
G	47.90 to 47.95 mm dia. (1.886 to 1.887 in. dia.)
H	43.90 to 43.95 mm dia. (1.729 to 1.730 in. dia.)

[Press Fit]

A	130 mm (5.12 in.)
B	72 mm (2.8 in.)
C	40 mm radius (1.6 in. radius)
D	9 mm (0.4 in.)
E	24 mm (0.94 in.)
F	20 mm (0.79 in.)
G	68 mm dia. (2.7 in. dia.)
H	43.90 to 43.95 mm dia. (1.729 to 1.730 in. dia.)

9Y1210318GEG0063US0

Petitioner MWE Investments, LLC, et al.
Exhibit 1003, Page 843

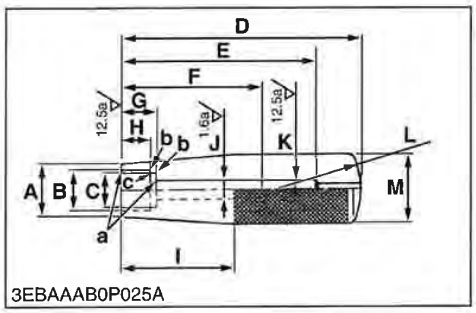

Valve Stem Seal Replacing Tool

Application

- Use to press fit the valve stem seal.

A	17.5 mm dia. (0.689 in. dia.)
B	13.7 to 13.9 mm dia. (0.540 to 0.547 in. dia.)
C	11.0 to 11.2 mm dia. (0.433 to 0.440 in. dia.)
D	75 mm (3.0 in.)
E	60 mm (2.4 in.)
F	45 mm (1.8 in.)
G	11.5 to 11.6 mm (0.453 to 0.456 in.)
H	8.5 mm (0.33 in.)
I	37.5 mm (1.48 in.)
J	6 mm dia. (0.2 in. dia.)
K	6 mm dia. (0.2 in. dia.)
L	R 30
M	26 mm dia. (1.0 in. dia.)
a	Chamfer 0.3 mm (0.01 in.)
b	Chamfer 0.4 mm (0.02 in.)
c	Chamfer 0.2 mm (0.008 in.)

9Y1210318GEG0064US0

Petitioner MWE Investments, LLC, et al.
Exhibit 1003, Page 844

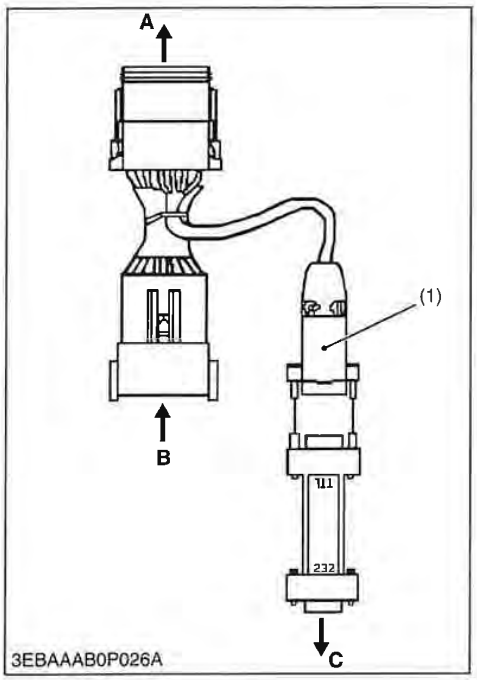

Electronic Governor Service Tool (WG972-E2, DF972-E2)

■ **NOTE**

- **Many applications are delivered pre-configured, calibrated, and tuned. These units do not require the use of the Service Tool.**

The Service Tool software is used to troubleshoot the electronic governor.

The Service Tool software resides on a PC (Personal computer) and communicates to the electronic governor through connector pins 4 and 6. An external RS-232 transceiver is necessary to make communications possible with the Woodward L-Series Service Tool.

The following hardware is required to work with the L-Series control : communication port, and Windows 95 / 98 / 2000 / NT / Me / XP as the operating system.

- PC-compatible laptop or desktop computer with at least one available serial communications port, and Windows 95 / 98 / 2000 / NT / Me / XP as the operating system.
- Datalink harness
  A connectivity kit (Woodward No. 8923-1061) can be purchased from Woodward to accomplish this.

In addition to the hardware, the following are the distributions of tool software needed to communicate with the control :

- Woodward part number 9927-1222, L-Series Service Tool.

CAUTION

- **There is a potential for serial port damage when communicating with the L-Series control. This is caused by a difference in AC voltage between neutral and earth ground. If the PC RS-232 port ground is referenced to AC neutral, and the L-Series control is referenced to battery ground (AC earth ground), a large amount of current can be experienced. To avoid this situation, we strongly recommend placing an isolation transformer between the AC outlet and the PC.**

(1) Connectivity Kit

A : To Actuator
B : From Engine Control Harness
C : To Personal Computer

9Y1210318GEG0065US0

Petitioner MWE Investments, LLC, et al.
Exhibit 1003, Page 845

1 ENGINE

Petitioner MWE Investments, LLC, et al.
Exhibit 1003, Page 846

MECHANISM

CONTENTS

1. ENGINE BODY 1-M1
   [1] CYLINDER BLOCK 1-M1
   [2] HALF-FLOATING HEAD COVER 1-M1
   [3] CYLINDER HEAD 1-M2
   [4] CRANKSHAFT 1-M2
   [5] PISTON AND PISTON RING 1-M3
   [6] OIL PAN 1-M3
   [7] CONNECTING ROD 1-M4
   [8] CAMSHAFT 1-M4
   [9] FUEL CAMSHAFT 1-M4
   [10]ROCKER ARM ASSEMBLY 1-M5
   [11]INLET AND EXHAUST VALVES 1-M5
   [12]FLYWHEEL 1-M5
   [13]CLOSED BREATHER 1-M6
2. LUBRICATING SYSTEM 1-M7
   [1] GENERAL 1-M7
   [2] OIL PUMP 1-M8
   [3] RELIEF VALVE 1-M8
   [4] OIL FILTER CARTRIDGE 1-M8
   [5] OIL PRESSURE SWITCH 1-M9
3. COOLING SYSTEM 1-M10
   [1] GENERAL 1-M10
   [2] COOLING FIN 1-M10
   [3] WATER PUMP 1-M10
   [4] THERMOSTAT 1-M11
   [5] RADIATOR 1-M11
   [6] RADIATOR CAP 1-M12
   [7] VAPORIZER (DF972-E2) 1-M12
4. FUEL SYSTEM 1-M13
   [1] GENERAL 1-M13
      (1) WG972-E2, DF972-E2 ..... 1-M13
      (2) DG972-E2 ..... 1-M14
   [2] CARBURETOR AND GAS MIXER 1-M15
      (1) Carburetor (WG972-E2) 1-M15
      (2) Carburetor (DF972-E2) 1-M16
      (3) Gas Mixer (DG972-E2) 1-M17
   [3] VAPORIZER (DF972-E2) 1-M17
   [4] REGULATOR (DG972-E2) 1-M20
   [5] GOVERNOR 1-M21
   [6] INLET MANIFOLD 1-M21
   [7] FUEL FILTER (FOR GASOLINE LINE) 1-M22
   [8] ELECTRO MAGNETIC FUEL FEED PUMP (FOR GASOLINE LINE) 1-M22
5. IGNITION SYSTEM 1-M23
   [1] DEGITAL IGNITION SYSTEM 1-M23
6. ELECTRICAL SYSTEM 1-M24
   [1] STARTING SYSTEM 1-M24
   [2] CHARGING SYSTEM 1-M25
   [3] SOLENOID 1-M28
7. ELECTRONIC GOVERNOR 1-M29

KiSC issued 06, 2009 A

1. ENGINE BODY

[1] CYLINDER BLOCK

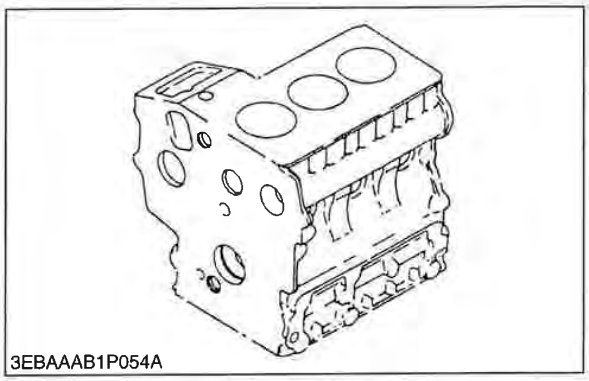
3EBAAAB1P054A

The engine has a high durability tunnel-type cylinder block in which the crank bearing component is a constructed body. Furthermore, liner less type, allow effective cooling, less distortion, and greater wear resistance. The noise level is reduced to a minimum because each cylinder has its own chamber.

To increase the rigidity of the cylinder block, parts of engine block which support main bearing case has thicker rib for additional rigidness to improve noise and vibration.

9Y1210318ENM0001US0

[2] HALF-FLOATING HEAD COVER

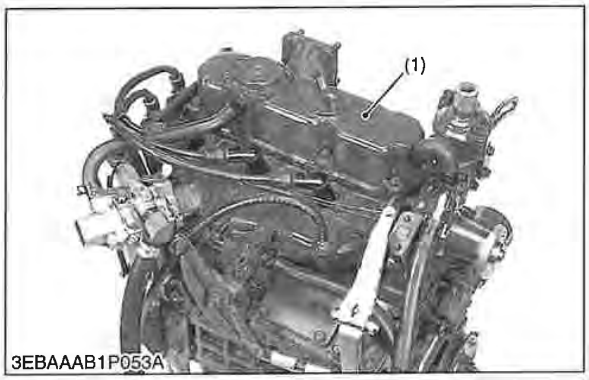

3EBAAAB1P053A

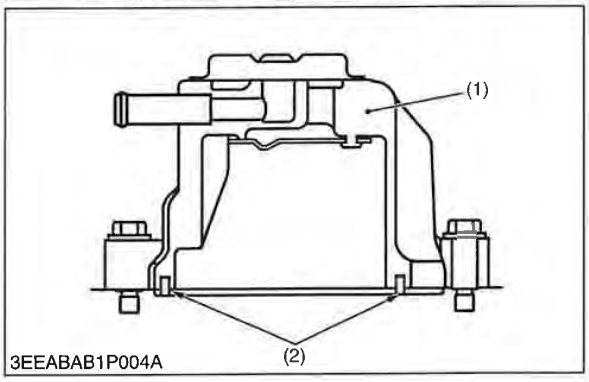

3EEABAB1P004A

The rubber packing is fitting in to maintain the head cover 0.5 mm (0.02 in.) or so off the cylinder head. This arrangement helps reduce noise coming from the cylinder head.

(1) Cylinder Head Cover (2) Rubber Packing

9Y1210318ENM0002US0

Petitioner MWE Investments, LLC, et al.
Exhibit 1003, Page 848

[3] CYLINDER HEAD

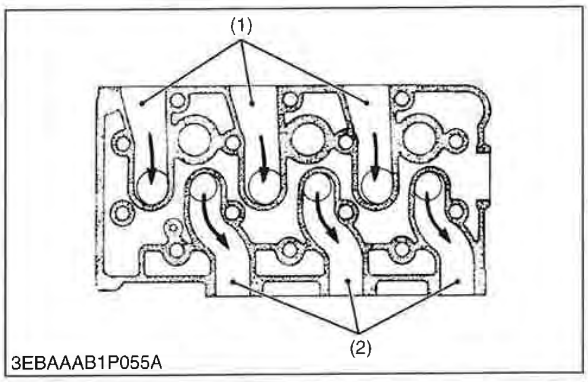

3EBAAAB1P055A

Intake and Exhaust Port

The cross-flow type intake / exhaust ports, which lower the heat conduction from the exhaust port to the intake port. The low heat conduction keeps the intake air from being heated and expanded by the exhaust gas.

(1) Intake Port (2) Exhaust Port

9Y1210318ENM0003US0

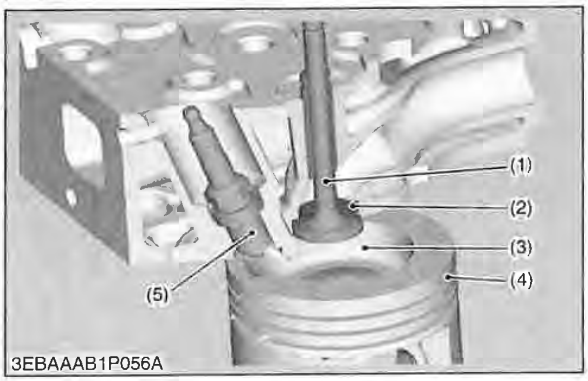

3EBAAAB1P056A

Combustion System

The Spark Ignition type combustion chamber, compactly placed on top of the piston head, successfully reduces emissions. To ensure even more reliable emission life, the intake / exhaust valve seats are fitted with special heat resistant stellite alloys.

(1) Valve
(2) Valve Seat
(3) Main Combustion Chamber
(4) Piston
(5) Spark Plug

9Y1210318ENM0004US0

[4] CRANKSHAFT

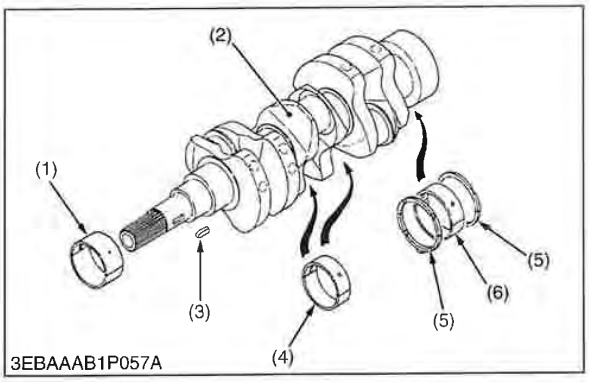

3EBAAAB1P057A

The crankshaft with the connecting rod converts the reciprocating motion of the piston into rotating motion. The crankshaft (2) has oil passages drilled so that oil can flow from the main bearings to the crank pin bearings.

The front journal is supported by a sleeve type bearing (crankshaft bearing 1) (1), the intermediate journal by a split type (crankshaft bearing 3) (4), and the rear by a split type (crankshaft bearing 2) (6) with thrust bearings (5).

(1) Crankshaft Bearing 1
(2) Crankshaft
(3) Feather Key
(4) Crankshaft Bearing 3
(5) Thrust Bearing
(6) Crankshaft Bearing 2

9Y1210318ENM0005US0

Petitioner MWE Investments, LLC, et al.
Exhibit 1003, Page 849

[5] PISTON AND PISTON RING

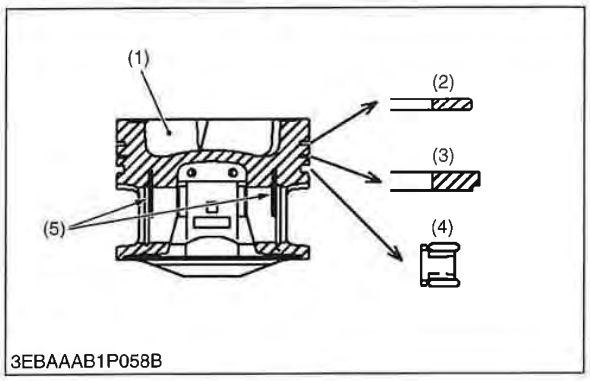

3EBAAAB1P058B

Piston and Piston Ring

Expansion Control Piston:

The thermal expansion is suppressed to the minimum by the adoption of the strut (5). The piston head has the combustion chamber (1) with the concave of bathtub shaped type.

Top Ring:

Barrel-faced type has an ideal shape in terms of lubrication theory in order to prevent abnormal wear due to edge loading at the time of initial running-in, and it is very effective in prevention of blow-by.

Second Ring:

Barrel-faced type has an ideal shape in terms of lubrication theory in order to prevent abnormal wear due to edge loading at the time of initial running-in, and it is very effective in prevention of blow-by.

Oil Ring:

Oil ring consists of three steel components, that is upper and lower rails and one spacer being held between two rails. This function is particularly effective in preventing oil-up because of high boost at the time of engine coasting.

(1) Combustion Chamber
(2) Top Ring
(3) Second Ring
(4) Oil Ring
(5) Strut

9Y1210318ENM0006US0

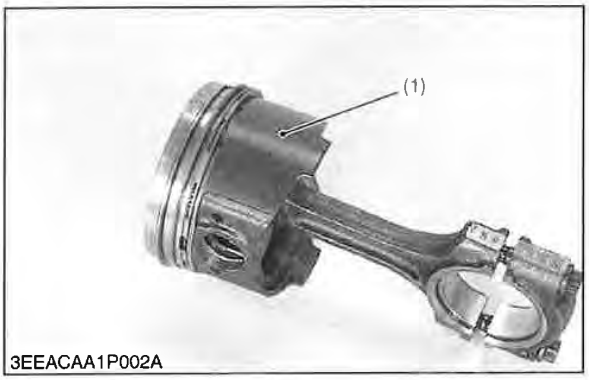

3EEACAA1P002A

Piston Skirt

Piston's skirt is coated with **molybdenum disulfide★**, which reduces the piston slap noise and thus the entire operating noise.

★ Molybdenum disulfide (MoS2)

The molybdenum disulfide serves as a solid lubricant, like a Graphite or Teflon. This material helps resist metal wears even with little lube oil.

(1) Molybdenum Disulfide

9Y1210318ENM0007US0

[6] OIL PAN

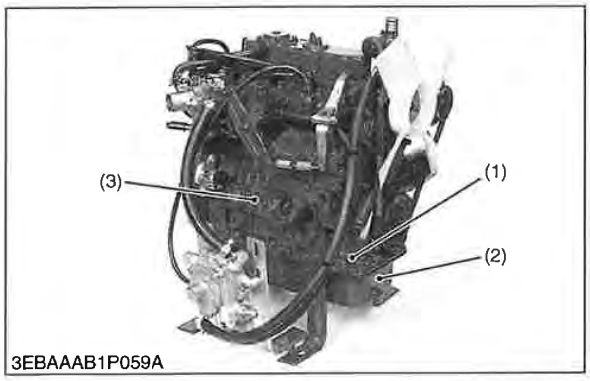

3EBAAAB1P059A

The oil pan is expanded under the gear case. Therefore, the height of the engine can be lowered more than so far while securing a necessary amount of oil.

(1) Gear Case
(2) Oil Pan
(3) Crank Case

9Y1210318ENM0008US0

Petitioner MWE Investments, LLC, et al.
Exhibit 1003, Page 850

[7] CONNECTING ROD

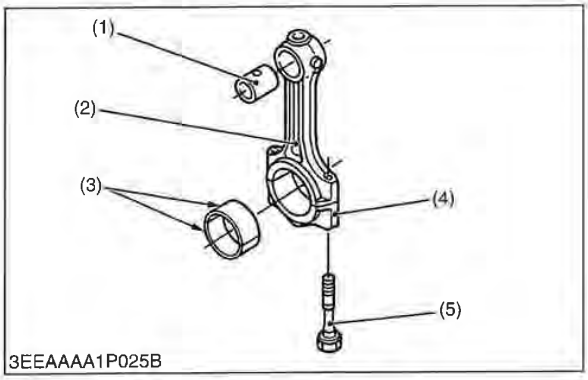

3EEAAAA1P025B

The connecting rod (2) is used to connect the piston with the crankshaft. The big end of the connecting rod has a crankpin bearing (3) (split type) and the small end has a small end bushing (1) (solid type).

(1) Small End Bushing
(2) Connecting Rod
(3) Crankpin Bearing
(4) Connecting Rod Cap
(5) Connecting Rod Screw

9Y1210318ENM0009US0

[8] CAMSHAFT

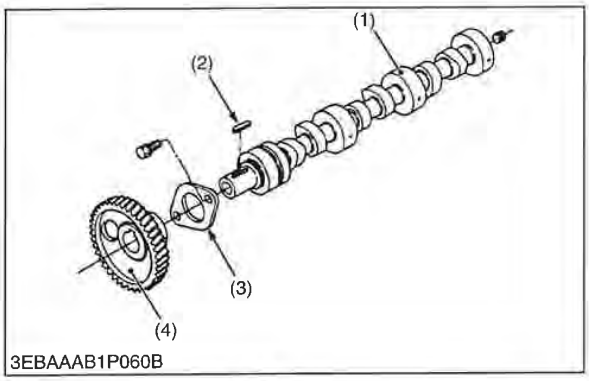

3EBAAAB1P060B

The camshaft (1) is made of special cast iron, and the journal and cam sections are chilled to resist wear.

The cams on the camshaft cause the intake and exhaust valves to open as the camshaft rotates. The bearing and journals are force-lubricated.

(1) Camshaft
(2) Feather Key
(3) Camshaft Stopper
(4) Cam Gear

9Y1210318ENM0010US0

[9] FUEL CAMSHAFT

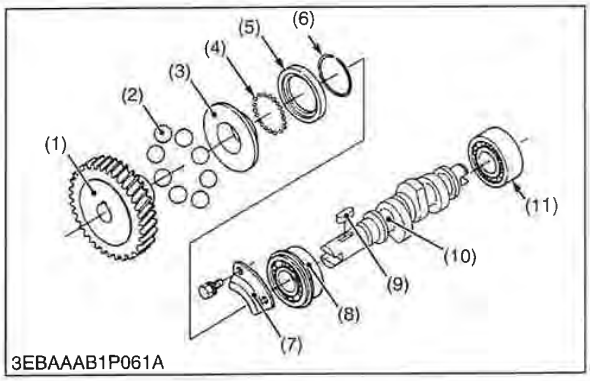

3EBAAAB1P061A

The camshaft (10) is equipped with steel ball (2) to control the governor.

Power can be taken out from this shaft. (Side PTO).

(1) Injection Pump Gear
(2) Steel Ball
(3) Governor Sleeve
(4) Steel Ball
(5) Governor Ball Case
(6) Governor Sleeve Snap Ring
(7) Stopper
(8) Ball Bearing
(9) Feather key
(10) Fuel Camshaft
(11) Ball Bearing

9Y1210318ENM0011US0

Petitioner MWE Investments, LLC, et al.
Exhibit 1003, Page 851

[10] ROCKER ARM ASSEMBLY

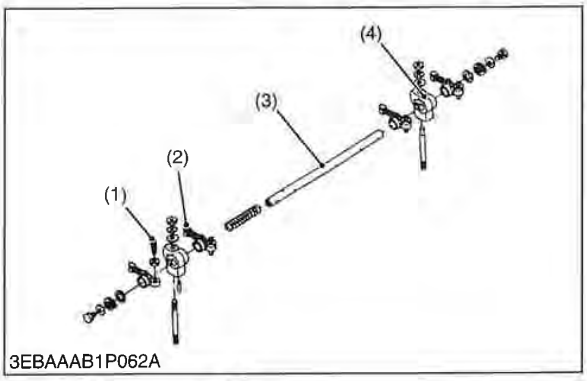

The rocker arm assembly includes the rocker arms (2) and adjusting screws (1), the end of which rests on the push rods, rocker arm brackets (4) and rocker arm shaft (3).

The rocker arms swing and transmits the reciprocating motion of the push rods to the inlet and exhaust valves to open and close them.

(1) Adjusting Screw
(2) Rocker Arm
(3) Rocker Arm Shaft
(4) Rocker Arm Bracket

9Y1210318ENM0012US0

[11] INLET AND EXHAUST VALVES

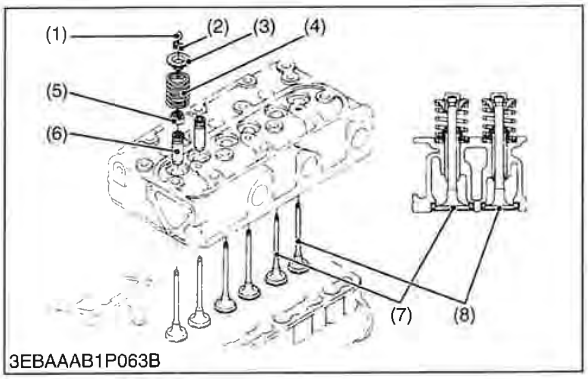

The valve and its guide for the inlet are different from those for the exhaust.

Other parts, such as the spring (4), spring retainer (3), collet (2), stem seal (5), and cap (1) are the same for both the inlet and exhaust.

(1) Valve Cap
(2) Collet
(3) Spring Retainer
(4) Spring
(5) Stem Seal
(6) Valve Guide
(7) Inlet Valve
(8) Exhaust Valve

9Y1210318ENM0013US0

[12] FLYWHEEL

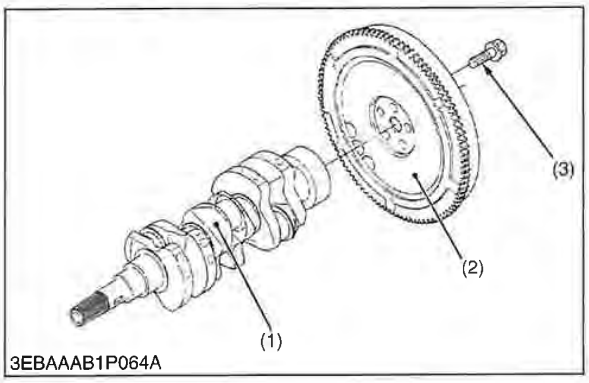

The flywheel (2) is connected with the crankshaft (1), it stores the rotating force in the combustion stroke as inertial energy to rotate the crankshaft smoothly.

The flywheel periphery is provided with marks showing fuel injection timing and top dead center.

The flywheel has gear teeth around its outer rim, which mesh with the drive pinion of the starter.

(1) Crankshaft
(2) Flywheel
(3) Flywheel Mounting Screw

9Y1210318ENM0014US0

Petitioner MWE Investments, LLC, et al.
Exhibit 1003, Page 852

[13] CLOSED BREATHER

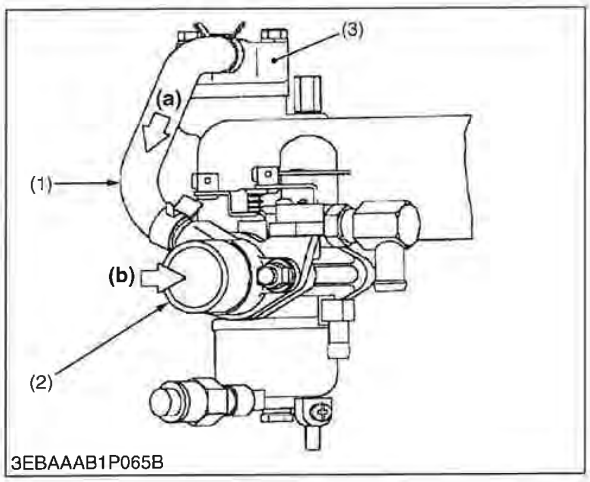

Blow-by gas **(a)** from crankcase is deoiled in the breather assembly (3) and sends to the air cleaner flange (2) where the blow-by gas **(a)** is mixed with the intake air **(b)**.

(1) Breather Hose
(2) Air Cleaner Flange
(3) Breather Assembly

(a) Blow-by Gas
(b) Intake Air

9Y1210318ENM0015US0

Petitioner MWE Investments, LLC, et al.
Exhibit 1003, Page 853

2. LUBRICATING SYSTEM

[1] GENERAL

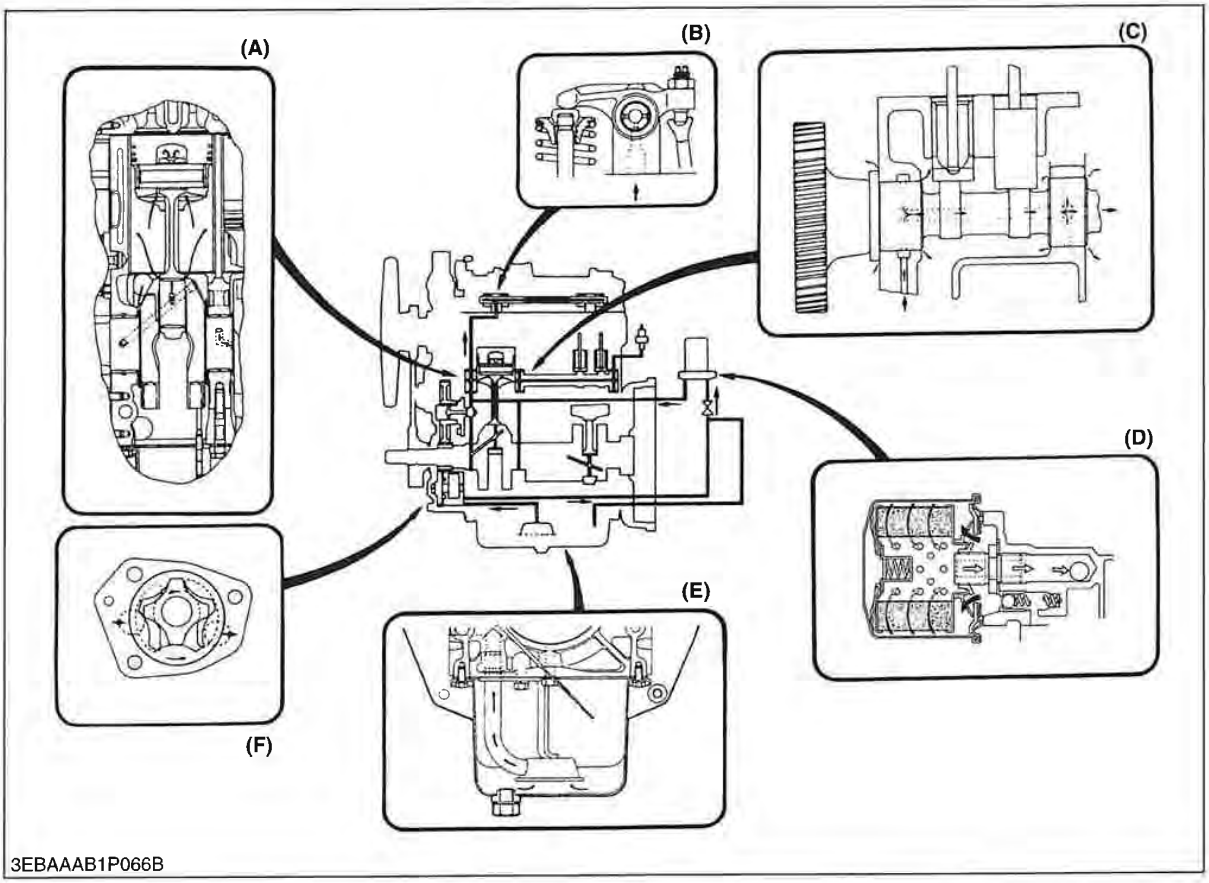

(A) Piston
(B) Rocker Arm and Rocker Arm Shaft
(C) Camshaft
(D) Oil Filter Cartridge and Relief Valve
(E) Oil Strainer
(F) Oil Pump

The lubricating system consists of an oil strainer, an oil pump, a relief valve, an oil filter cartridge and an oil pressure switch. The oil pump sucks the lubricating oil in the oil pan through the strainer and sends it to the oil filter cartridge, where the oil is further filtered.

The filtered oil is forced to the crankshaft, the connecting rods, the idle gear, the camshaft and the rocker arm shaft through the oil passage in the cylinder block and the shafts to lubricate the bearings.

Some oil, splashed by the crankshaft or thrown off from the bearings, lubricates other engine parts: the pistons, the cylinder walls, the piston pins, the tappets, the push rods, the timing gears, and the inlet and exhaust valves.

9Y1210318ENM0016US0

Petitioner MWE Investments, LLC, et al.
Exhibit 1003, Page 854

[2] OIL PUMP

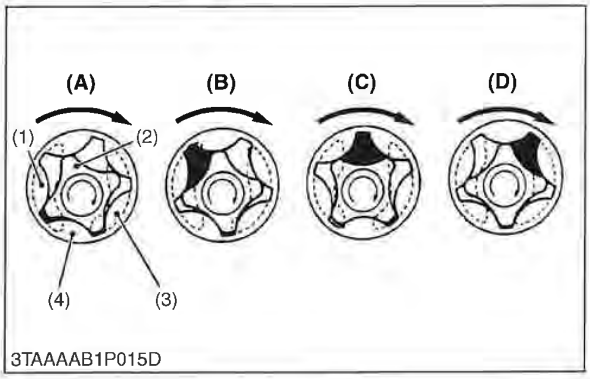

3TAAAAB1P015D

The oil pump is a trochoid pump, whose rotors have trochoid lobes. The inner rotor (2) has 4 lobes and the outer rotor (4) has 5 lobes, and they are eccentrically engaged with each other. The inner rotor, which is driven by the crankshaft through the gears, rotates the outer rotor in the same direction, varying the space between the lobes.

While the rotors rotate from **(A)** to **(B)**, the space leading to the inlet port increases, which causes the vacuum to suck in the oil from the inlet port.

When the rotors rotate to **(C)**, the space between both rotors switches from the inlet port to the outlet port. At **(D)**, the space decreases and the sucked oil is discharged from the outlet port.

(1) Inlet Port
(2) Inner Rotor
(3) Outlet Port
(4) Outer Rotor

9Y1210318ENM0017US0

[3] RELIEF VALVE

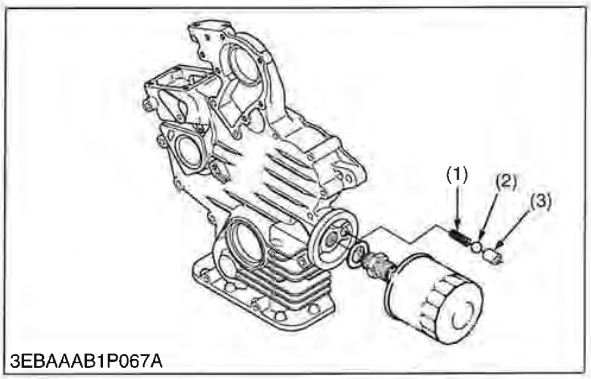

3EBAAAB1P067A

The relief valve prevents the damage to the lubricating system due to the high pressure of the oil.

This relief valve is a ball direct acting type, and is best suited for low pressures.

When the pressure of the oil, forced by the pump, exceeds the specified value, the oil pushes back the ball (2) and escapes to the oil pan.

(1) Spring
(2) Ball
(3) Valve Seat

9Y1210318ENM0018US0

[4] OIL FILTER CARTRIDGE

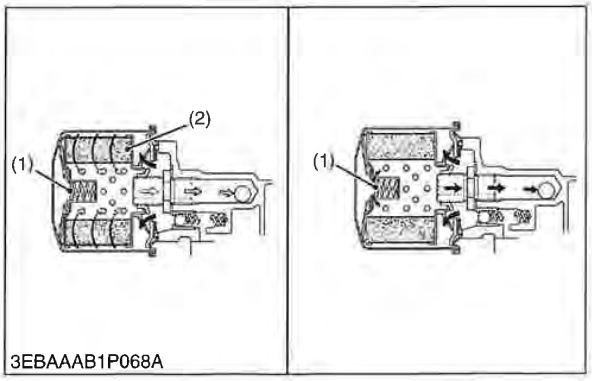

3EBAAAB1P068A

After lubricating, the lubricating oil brings back various particles of grit and dirt to the oil pan. Those particles and the impurities in the lubricating oil can cause wear or seizure of the engine parts. It may also impair the physical and chemical properties of the oil itself.

The lubricating oil which is force-fed by the pump, is filtered by the filter cartridge with the filter element (2).

When the filter element accumulates on excessive amount of dirt and the oil pressure in the inlet line builds up by 98 kPa (1.0 kgf/cm^2, 14 psi) more than the outlet line, the bypass valve (1) opens to allow the oil to flow from the inlet into the outlet line, bypassing the filter element.

(1) Bypass Valve
(2) Filter Element

9Y1210318ENM0019US0

Petitioner MWE Investments, LLC, et al.
Exhibit 1003, Page 855

[5] OIL PRESSURE SWITCH

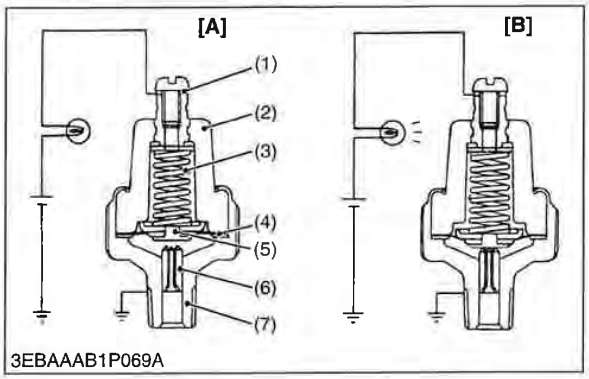

3EBAAAB1P069A

The oil pressure switch is mounted on the cylinder block and is led to the lubricating oil passage.

When the oil pressure falls below the specified value, the oil pressure warning lamp lights.

(1) Terminal
(2) Insulator
(3) Spring
(4) Rubber Gasket
(5) Contact Rivet
(6) Contact
(7) Oil Switch Body

[A] At the proper oil pressure
[B] At lower oil pressure, 50 kPa (0.5kgf/cm^2, 7 psi) or less

9Y1210318ENM0020US0

Petitioner MWE Investments, LLC, et al.
Exhibit 1003, Page 856

3. COOLING SYSTEM

[1] GENERAL

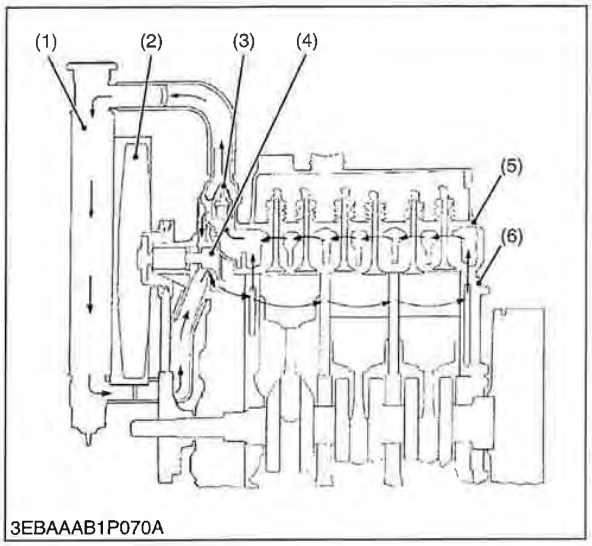

3EBAAAB1P070A

The cooling system consists of a radiator (1), a centrifugal water pump (4), a suction fan (2) and a thermostat (3).

The coolant is cooled through the radiator core, and the fan behind the radiator pulls the cooling air through the core to improve cooling.

The water pump sucks the coolant from the radiator or from the cylinder head and forces it into the cylinder block.

The thermostat opens or closes according to the coolant temperature, to allow the coolant to flow from the cylinder block to the radiator while open, or only to the water pump while closed.

Thermostat's valve opening temperature	Factory spec.	69.5 to 72.5 °C 157.1 to 162.5 °F

(1) Radiator
(2) Cooling Fan
(3) Thermostat
(4) Water Pump
(5) Cylinder Head
(6) Cylinder Block

9Y1210318ENM0021US0

[2] COOLING FIN

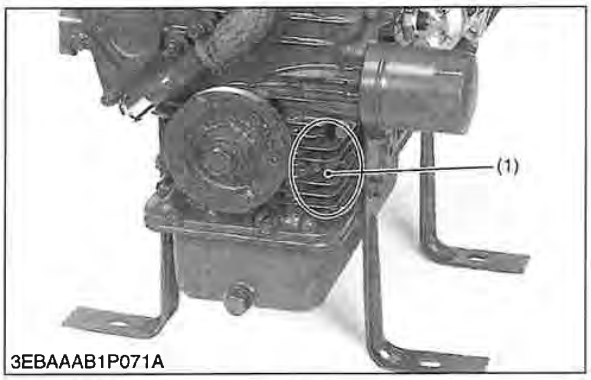

3EBAAAB1P071A

The cooling fin is set up around the oil passage in the gear case.

Therefore, the temperature of oil is decreased by the wind generated by the cooling fan.

(1) Cooling Fin

9Y1210318ENM0022US0

[3] WATER PUMP

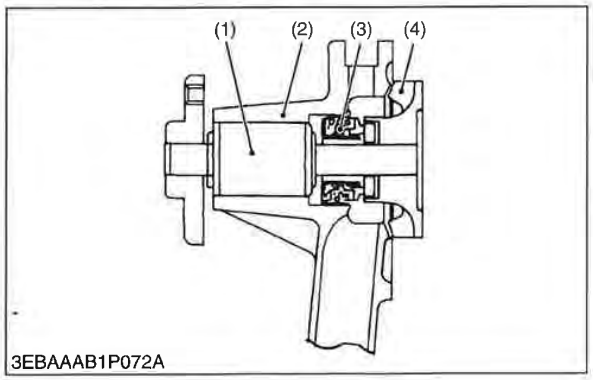

3EBAAAB1P072A

The water pump is driven by the crankshaft and a V belt. The rotating impeller (4) in the water pump sucks the coolant from the radiator and sends it into the water jacket in the cylinder block.

The mechanical seal (3) prevents the water from entering the bearing unit (1).

(1) Bearing Unit
(2) Water Pump Body
(3) Mechanical Seal
(4) Impeller

9Y1210318ENM0023US0

Petitioner MWE Investments, LLC, et al.
Exhibit 1003, Page 857

[4] THERMOSTAT

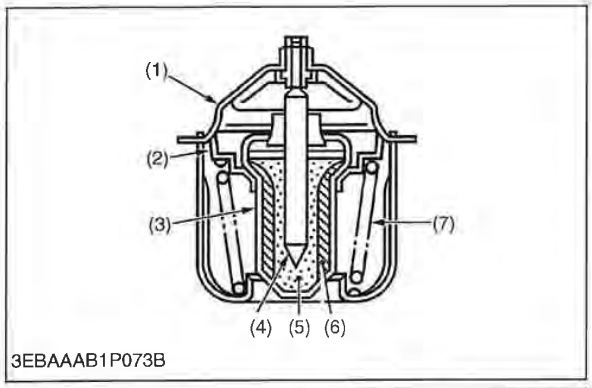

3EBAAAB1P073B

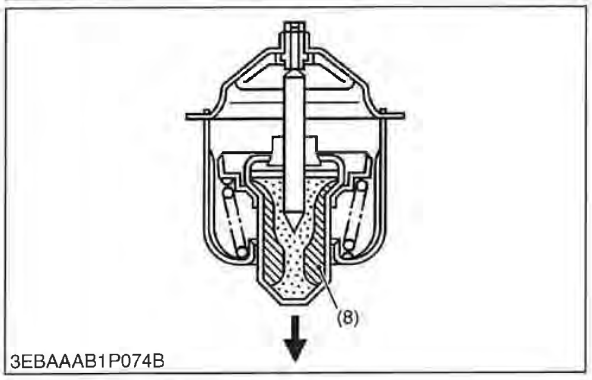

3EBAAAB1P074B

The thermostat is of the wax pellet type.

The thermostat controls the flow of the coolant to the radiator to keep the proper temperature.

The case, which serves as a valve seat, has a spindle inserted in the pellet (3) which is installed to the valve (2). The spindle is covered with the synthetic rubber (5) in the pellet.

The wax is charged between the pellet and the rubber.

■ **At low temperature (lower than 71 °C (160 °F))**

The valve (2) is seated by the spring (7) and the coolant circulates in the engine through the water return hose without running into the radiator. Only the air in the water jacket escapes to the radiator through the leak hole of the thermostat.

■ **At high temperature (higher than 85 °C (185 °F))**

As the coolant temperature rises, the wax in the pellet (3) turns liquid and expands, repelling the spindle, which causes the pellet to lower. The valve (2) opens to send the coolant to the radiator.

(1) Seat
(2) Valve
(3) Pellet
(4) Spindle
(5) Synthetic Rubber(6)Wax (Solid)
(7) Spring
(8) Wax (liquid)

9Y1210318ENM0024US0

[5] RADIATOR

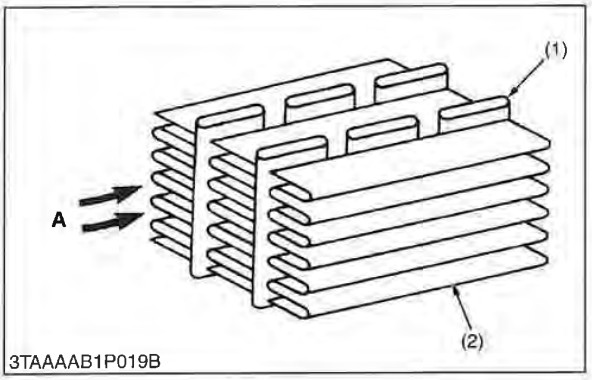

3TAAAAB1P019B

The radiator core consists of coolant carrying tubes (1) and fins (2) meeting at a right angle with the tubes. The fin is a louverless, corrugated type which is light in weight, high in heat exchange ratio and less apt to clog.

The coolant in the tubes is cooled by the air flowing through the tube walls and fins.

(1) Tube
(2) Fin

A : Cooling Air

9Y1210318ENM0025US0

Petitioner MWE Investments, LLC, et al.
Exhibit 1003, Page 858

[6] RADIATOR CAP

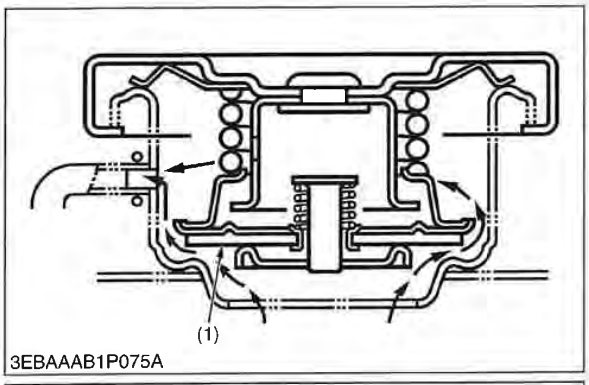

3EBAAAB1P075A

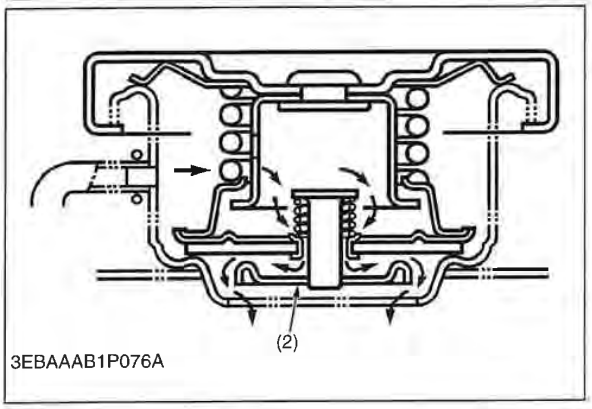

3EBAAAB1P076A

The pressure type radiator cap prevents differences in pressure between the inside and the outside of the radiator from deforming the radiator.

When the coolant temperature rises and the pressure in the radiator increases above the specified pressure, the pressure valve (1) opens to reduce the internal pressure.

When the coolant temperature falls and a vacuum forms in the radiator, the vacuum valve (2) opens to introduce the air into the radiator.

(1) Pressure Valve (Opening pressure 88 kPa (0.90 kgf/cm^2, 13 psi))
(2) Vacuum Valve

9Y1210318ENM0026US0

[7] VAPORIZER (DF972-E2)

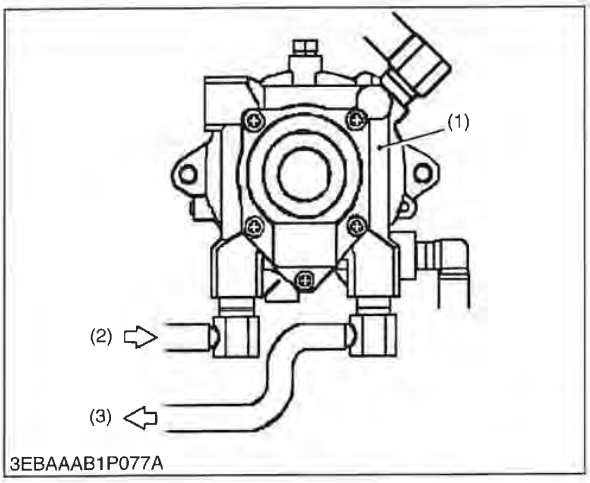

3EBAAAB1P077A

When evaporating by primary chamber of vaporizer liquid LPG needs the evaporation heat.

This vaporizer installs the water jacket, throws the coolant of engine, heats primary chamber, promotes evaporation, and prevents valves being frozen.

(1) Vaporizer
(2) Hot Coolant In
(3) Hot Coolant Out

9Y1210318ENM0027US0

Petitioner MWE Investments, LLC, et al.
Exhibit 1003, Page 859

4. FUEL SYSTEM

[1] GENERAL

(1) WG972-E2, DF972-E2

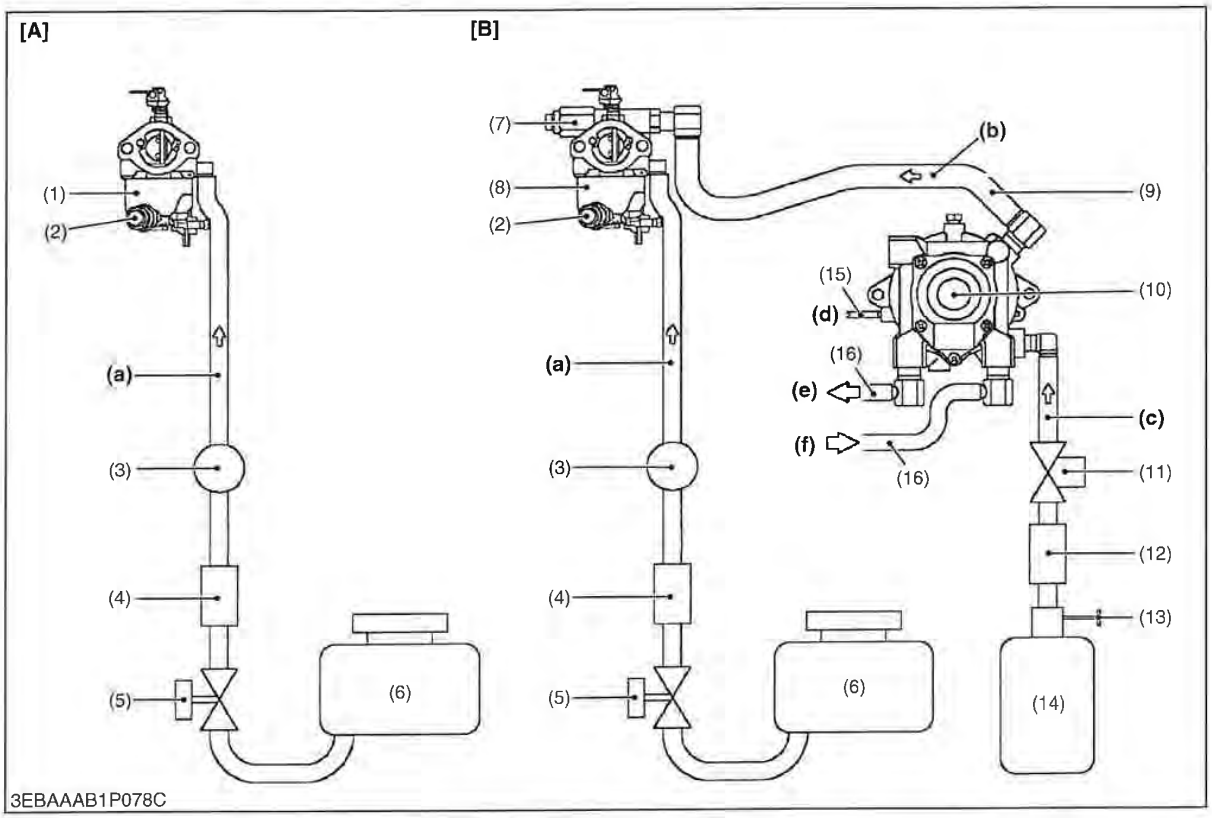

(1) WG Carburetor	(9) Vapor Hose*	**(a) Gasoline Line**	**[A] WG972-E2**
(2) Gasoline Cut Off Solenoid	(10) Vaporizer	**(b) Gaseous Propane Line**	**[B] DF972-E2**
(3) Fuel Feed Pump	(11) LPG Shut Off Solenoid Valve*	**(c) Liquid Propane Line**	
(4) Fuel Filter	(12) LPG Filter*	**(d) Vacuum Line**	Component Marked * Is Not
(5) Gasoline Cock*	(13) LPG Manual Valve*	**(e) Hot Coolant Out Line**	Provided by KUBOTA
(6) Gasoline Tank*	(14) LPG Tank*	**(f) Hot Coolant In Line**	
(7) LPG Cut Off Solenoid	(15) Vacuum Hose*		
(8) DF Carburetor	(16) Coolant Hose*		

WG972-E2:

The fuel is fed from the gasoline tank (6) through the fuel filter (4) to the WG carburetor (1) by the fuel feed pump (3).

DF972-E2:

This fuel system has 2 ways. Gasoline fuel is the same as WG972-E2.

For LPG fuel, the liquid fuel stored in the LPG tank (14) is sent to vaporizer (10) by pressure in the gaseous phase in the tank through the LPG filter (12) and LPG shut off solenoid valve (11).

The liquid fuel is evaporated in vaporizer and is sent to the DF carburetor (8) as a gaseous fuel of gas pressure near the atmospheric pressure. The DF carburetor (8) mixes the gas and air is supplied in the cylinder.

9Y1210318ENM0028US0

Petitioner MWE Investments, LLC, et al.
Exhibit 1003, Page 860

(2) DG972-E2

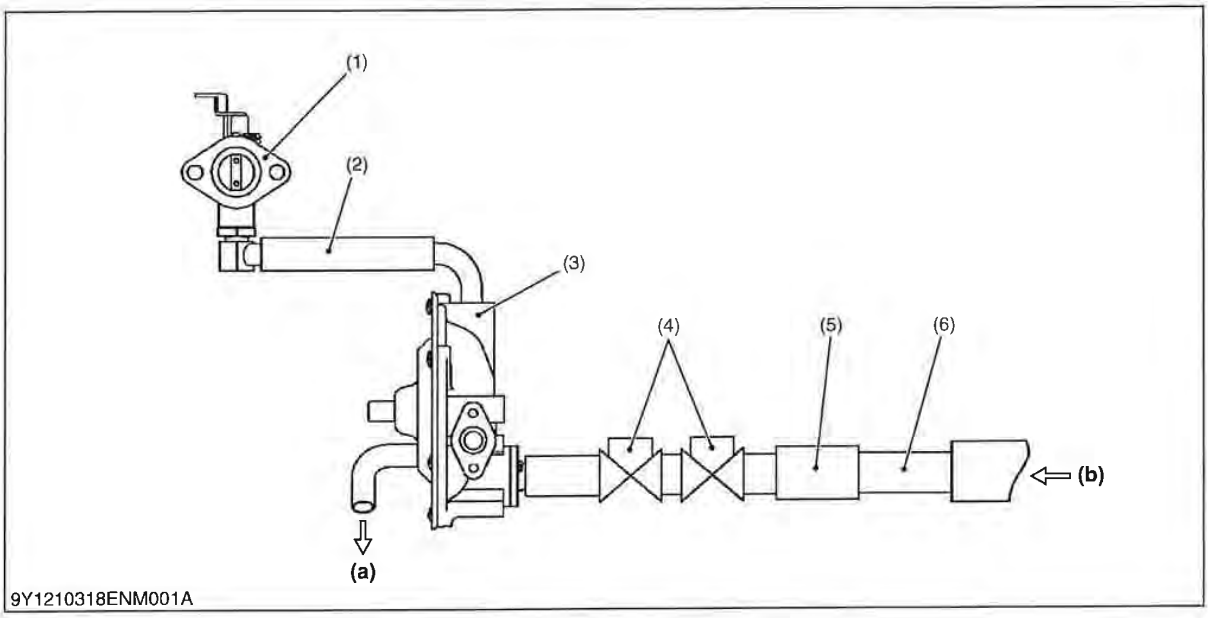

(1) Gas Mixer	(3) Gas Regulator	(5) Fuel Filter	**(a) Air Vent**
(2) Gas Hose	(4) Shut Off Solenoid Valve	(6) Gas Hose	**(b) Fuel Line**

DG972-E2 :

Natural gas is sent from the gas source through the fuel filter (5), the shut off solenoid valve (4), and the gas regulator (3) to the gas mixer (1), and mixed with air.

Then, mixture gas is sent to the cylinder by negative pressure of the suction stroke.

9Y1210318ENM0029US0

Petitioner MWE Investments, LLC, et al.
Exhibit 1003, Page 861

[2] CARBURETOR AND GAS MIXER

(1) Carburetor (WG972-E2)

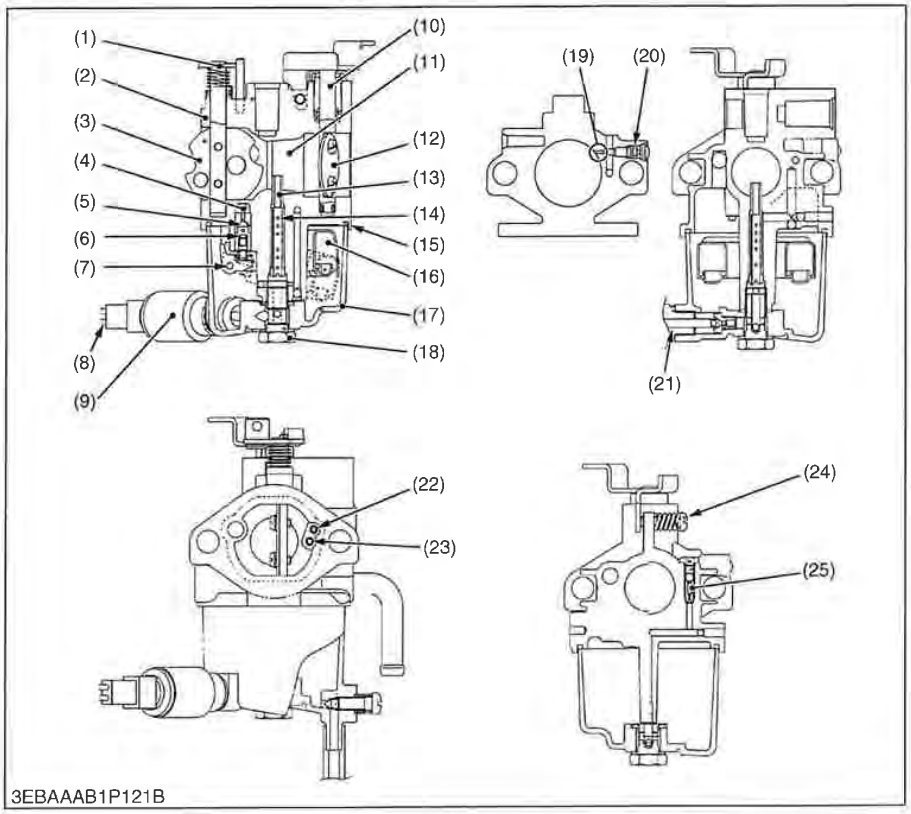

(1) Choke Lever
(2) Carburetor Body
(3) Choke Valve
(4) Inlet Port
(5) Valve Seat
(6) Needle Valve
(7) Float Pin
(8) Earth Cord
(9) Solenoid Valve Assembly
(10) Throttle Shaft
(11) Venturi
(12) Throttle Valve
(13) Main Nozzle
(14) Bleeder Hole
(15) Float Chamber Gasket
(16) Float
(17) Float Chamber
(18) Chamber Set Plug
(19) Pilot Outlet
(20) Pilot Screw
(21) Main Jet
(22) Slow Air Jet
(23) Main Air Jet
(24) Throttle Stopper Adjusting Screw
(25) Pilot Jet

Designed for general purpose use, this carburetor provides engines with the ideal fuel-air mixture for all speed ranges.

1) Float Chamber

When the gasoline in the fuel tank flows into the float chamber (17), the float (16) rises and, when a predetermined amount of gasoline is in the chamber, it pushes the needle valve (6) against the valve seat (5) to stop additional gasoline from entering through the inlet port (4). As the gasoline is consumed, the float goes down and more gasoline is led into the chamber to maintain a constant distance between the main nozzle (13) and the level of the gasoline.

2) Starting System

To start an engine in cold weather, the fuel-air mixture must be richer than normal. A choke valve (3) controlled by the choke lever (1) is provided to enrich the mixture.

As the choke valve is closed, the air supply is restricted to make the mixture rich. This rich mixture is then supplied to the intake manifold to facilitate starting.

3) Slow System

When the throttle valve (12) closes, air that flows into the cylinder passes along the valve at a high speed. As a result, a negative pressure is crated in the pilot outlet (19) which has an outlet port in the inner wall. This causes gasoline in the main nozzle (13) to flow through the pilot jet (25) to be sucked into the cylinder. Air that enters from the slow air jet (22) is mixed with gasoline in the pilot jet (25), atomized in an appropriate condition, sprayed from the pilot outlet (19) and sucked into the cylinder through the main passage. The slow speed of the engine is controlled by changing the jet area with the pilot jet (25).

4) Main Carburetor System

The speed of air that flows into the cylinder increases when it passes the venturi (11), and the negative pressure increase as a result at the tip of the main nozzle (13). The negative pressure causes the gasoline in the float chamber (17) to flow through the main jet (21) and to be sucked into the main nozzle (13). Air which flows from the main air jet (23) into the bleeder hole (14) of the main nozzle (13) is mixed with gasoline, atomized in an appropriate condition, then sprayed from the nozzle tip to the venturi (11) and sucked with the main air into the cylinder.

9Y1210318ENM0030US0

Petitioner MWE Investments, LLC, et al.
Exhibit 1003, Page 862

(2) Carburetor (DF972-E2)

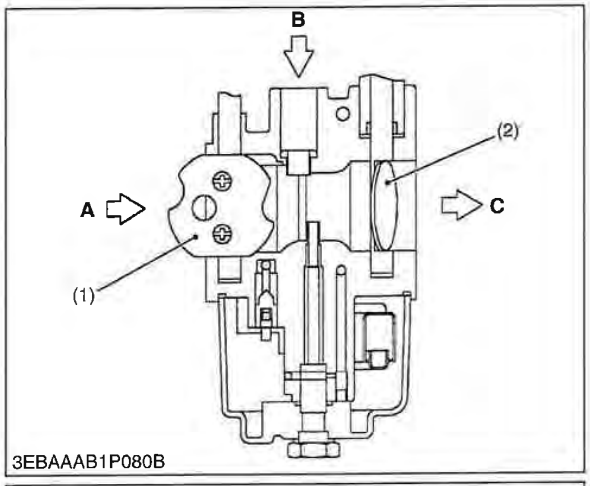

3EBAAAB1P080B

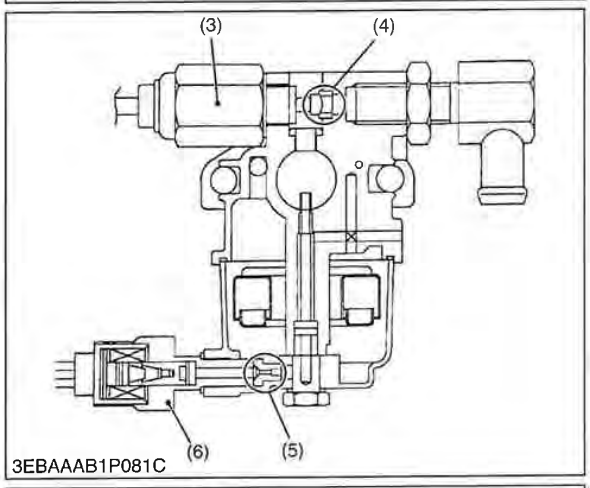

3EBAAAB1P081C

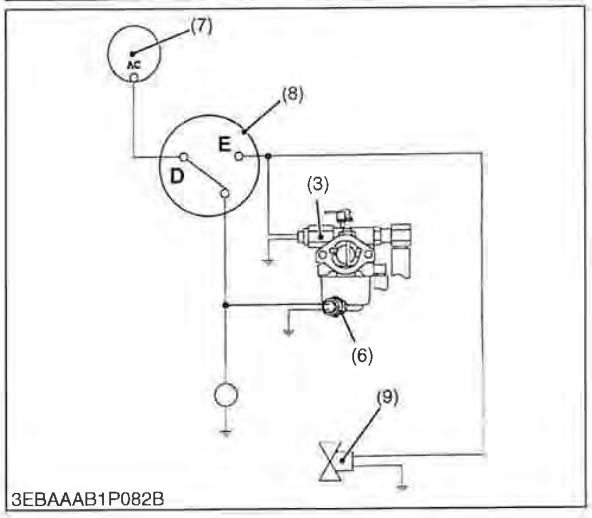

3EBAAAB1P082B

■ **NOTE**

- **DF Carburetor operates the same as a gasoline carburetor in gasoline fuel.**

With the fuel select switch (8) in the **"GASOLINE"** position **"D"** and the main switch in the **"ON"** position, the battery current flows to the gasoline cut off solenoid (6). Therefore gasoline fuel in the float chamber flows to the mixing chamber.

When the fuel select switch (8) is turned to the **"LPG"** position **"E"**, the battery current stops to the gasoline cut off solenoid (6) and flows to the LPG cut off solenoid (3) and LPG shut off solenoid valve (9).

Then, the gasoline fuel flow is shut and LPG fuel flows to the mixing chamber.

The mixer meters both fuel and air, and procedures an air / fuel mixture that has the proper ratio as required by the engine.

When the engine starts, the LPG furl flows out from main jet (4) to venture a constant amount and is mixed with air quantity corresponding to the opening of the throttle valve (1) and is supplied to the cylinder.

When the main switch (7) turned to the **"OFF"** position, the battery current stops to the both of solenoids.

Then, both gasoline fuel and LPG fuel can not flow to the mixing chamber.

(1)	Choke Valve	**A :**	**Air**
(2)	Throttle Valve	**B :**	**LPG Fuel (gaseous)**
(3)	LPG Cut Off Solenoid	**C :**	**Mixture (Air / Fuel)**
(4)	LPG Main Jet	**D :**	**Gasoline Position**
(5)	Gasoline Main Jet	**E :**	**LPG Position**
(6)	Gasoline Cut Off Solenoid		
(7)	Main Switch		
(8)	Fuel Select Switch		
(9)	LPG Shut Off Solenoid Valve		

9Y1210318ENM0031US0

Petitioner MWE Investments, LLC, et al.
Exhibit 1003, Page 863

(3) Gas Mixer (DG972-E2)

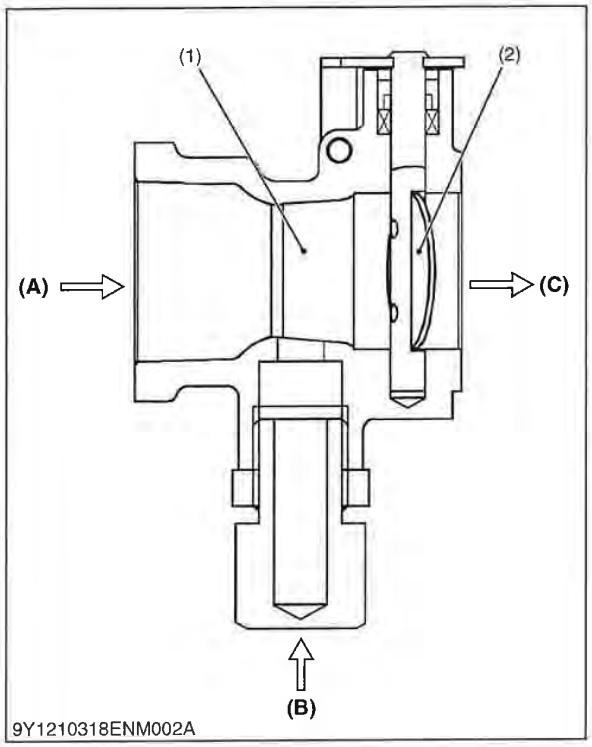

9Y1210318ENM002A

The gas mixer is equipment to mix the fuel supplied from the regulator with air and to send the mixture to the cylinder.

(1) Venturi
(2) Throttle Valve

(A) Air
(B) Natural Gas
(C) Mixture (Air / Natural Gas)

9Y1210318ENM0032US0

[3] VAPORIZER (DF972-E2)

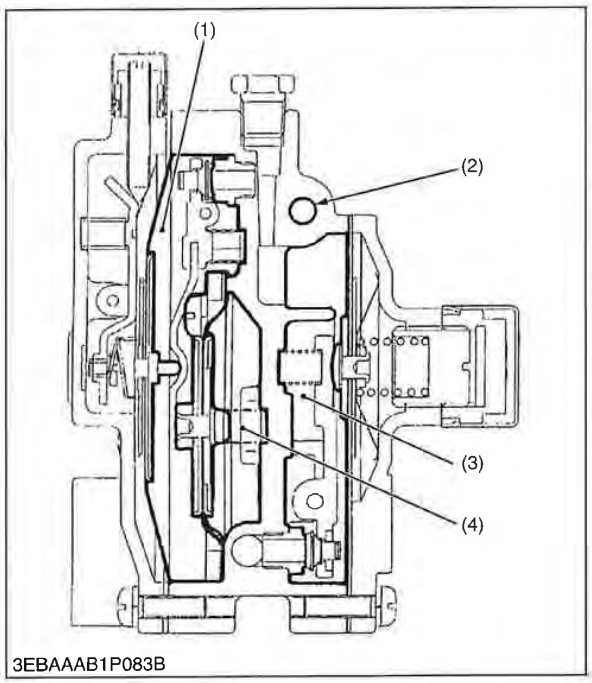

3EBAAAB1P083B

Vaporizer is a device which converts the liquid fuel into the gaseous fuel and the following structures and functions are possessed.

■ **Primary Chamber**

The liquid fuel is decompressed (the first decompression) and it is evaporated.

■ **Secondary Chamber**

The fuel which flows in is decompressed from the primary chamber to the vicinity of the atmospheric pressure further (the second decompression).

■ **Water Passage**

The coolant of the engine is made to circulate as a heat source to evaporate the LPG.

■ **Vacuum Lock Chamber**

When the engine stops, the fuel from primary chamber is prevented from flowing out.

(1) Secondary Chamber
(2) Water Passage
(3) Primary Chamber
(4) Vacuum Lock Chamber

9Y1210318ENM0033US0

Petitioner MWE Investments, LLC, et al.
Exhibit 1003, Page 864

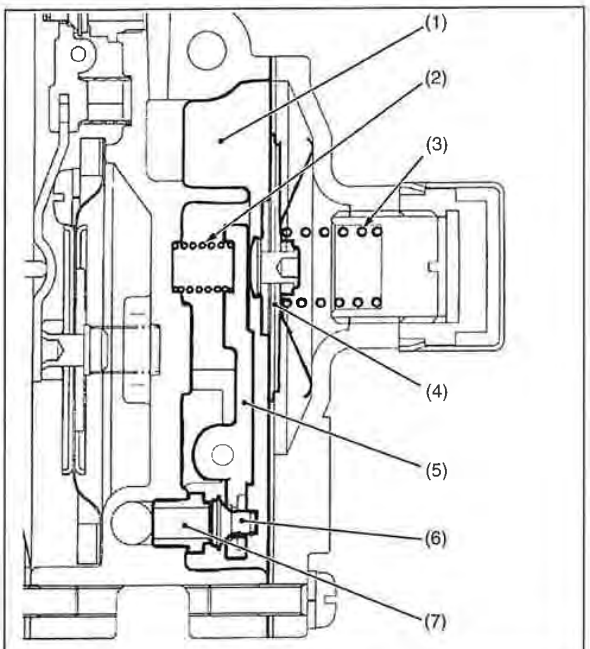

3EBAAAB1P084B

Primary Chamber

The liquid fuel which pushes the primary valve (6) open passes between the valve and the valve seat (7), enters primary chamber (1), and decompresses and is evaporated.

When the inflow of the fuel continues and the primary chamber pressure rises more than the specified pressure 32.7 kPa (0.3 kgf/cm^2, 4.3 psi), the tension in the diaphragm spring (3) is overcome and do the push up of primary diaphragm (4).

At this time, do the push up of primary valve lever spring (2) of primary valve lever (5), primary valve (6) is shut, and the inflow of the fuel is intercepted.

The tension in the diaphragm spring (3) grows more than the primary chamber pressure when the fuel is consumed and the primary chamber pressure lowers more than a regulated value and a primary diaphragm is depressed below.

The primary valve lever (5) is depressed at the same time.

A primary valve opens and the fuel flows in again.

When the diaphragm tears by any chance and the fuel flows in the primary diaphragm spring side, the primary diaphragm spring side is connected with second chamber in the balance passage so that the fuel should not flow out outside.

(1) Primary Chamber
(2) Primary Valve Lever Spring
(3) Primary Diaphragm Spring
(4) Primary Diaphragm
(5) Primary Valve Lever
(6) Primary Valve
(7) Valve Seat

9Y1210318ENM0034US0

Petitioner MWE Investments, LLC, et al.
Exhibit 1003, Page 865

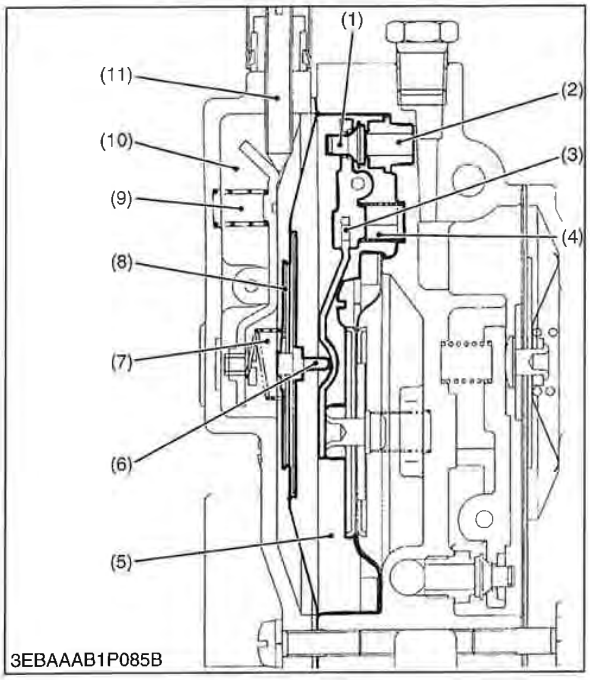

Secondary Chamber

The fuel adjusted with primary chamber to the specified pressure enters secondary chamber (5) between secondary valve (1) and the valve seat (2) and is decompressed to the vicinity of the atmospheric pressure almost.

A secondary valve is assembled to a part of the secondary valve lever (3) supported to body and is shut by the tension of the spring of a secondary valve spring (4).

A secondary diaphragm pin (6) touches the edge besides this lever (3).

The one side of secondary diaphragm (8) is faced in secondary chamber and the other side faces atmosphere chamber (10).

When the engine stops, the atmospheric pressure is led in secondary chamber and a secondary valve is shut by the tension of a secondary valve spring.

When the engine rotates, the negative pressure is generated in the venturi tube of the mixer.

As for this negative pressure, working secondary diaphragm (8) is pulled to the second chamber side by the difference pressure with atmosphere chamber by second chamber.

Do the push up of the secondary valve lever (3) by this working, secondary valve is opened, and the fuel flows in.

When pressure in chamber rises by the fuel which flows in, the diaphragm is pushed to the atmosphere chamber side and narrows the opening of the valve and decreases the supply of the fuel.

Secondary chamber is almost maintained in the atmospheric pressure by the thing to repeat such working.

(1) Secondary Valve
(2) Valve Seat
(3) Secondary Valve Lever
(4) Secondary Valve Lever Spring
(5) Secondary Chamber
(6) Diaphragm Pin
(7) Balance Spring
(8) Secondary Diaphragm
(9) Balance Lever Spring
(10) Atmosphere Chamber
(11) Idle Adjust Screw

9Y1210318ENM0035US0

Petitioner MWE Investments, LLC, et al.
Exhibit 1003, Page 866

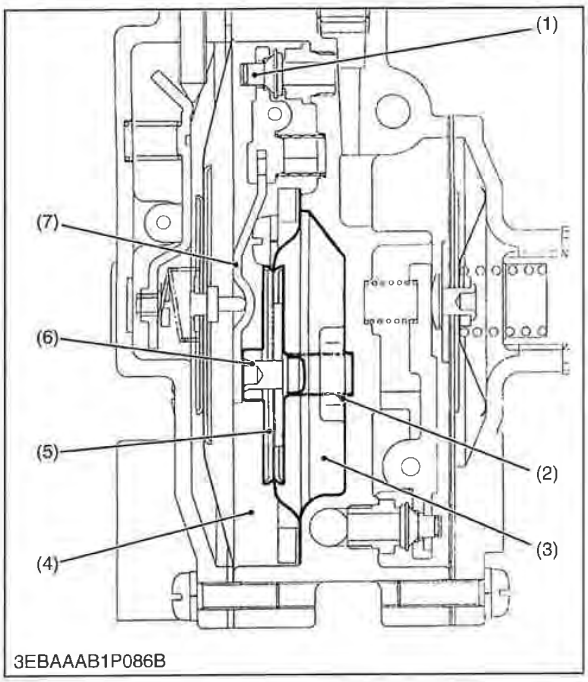

Vacuum Lock Chamber

1) Operation when engine stops

Because pressure on the vacuum lock chamber (3) side and the secondary chamber (4) side is equal, vacuum lock diaphragm (5) is pushed to the second chamber side by the tension of vacuum lock diaphragm spring (2).

Secondary valve and the seat are made to close as vacuum lock diaphragm pin (6) pushes secondary valve lever (7) and the fuel leakage is prevented.

2) Operation at engine starting

The negative pressure is caused in inlet manifold at the same time as the cranking's beginning.

This negative pressure acts in vacuum lock chamber (3) and vacuum lock diaphragm (5) is drawn to the vacuum lock chamber side.

As a result, the movement of secondary valve lever (7) becomes free and the fuel inflow adjustment due to secondary valve (1) becomes possible.

The negative pressure in inlet manifold always works while the engine is rotating and the movement of secondary valve lever is tuned to the movement of secondary diaphragm.

(1) Secondary Valve
(2) Vacuum Lock Diaphragm Spring
(3) Vacuum Lock Chamber
(4) Secondary Chamber
(5) Vacuum Lock Diaphragm
(6) Diaphragm Pin
(7) Secondary Valve Lever

9Y1210318ENM0036US0

[4] REGULATOR (DG972-E2)

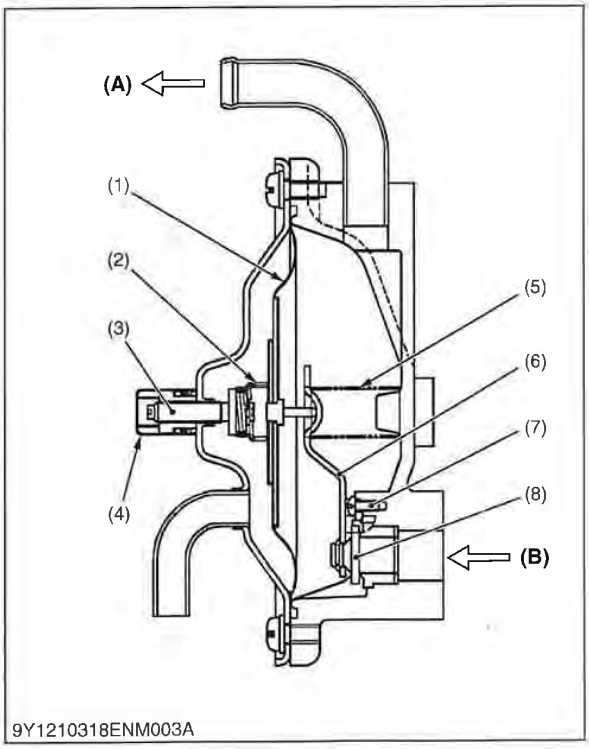

The regulator is equipment that regulates the fuel pressure supplied to the gas mixer to be constant.

The negative pressure of the suction stroke makes the inside pressure of the regulator negative.

The negative pressure of the regulator makes the diaphragm (1) push the lever (6).

Pushing the lever (6) opens the valve (8), with the screw (7) acting as a fulcrum, which makes the fuel suctioned.

(1) Diaphragm
(2) Balance Spring
(3) Balance Screw
(4) Tamper Cap
(5) Spring
(6) Lever
(7) Screw
(8) Valve

(A) OUT
(B) IN

9Y1210318ENM0037US0

Petitioner MWE Investments, LLC, et al.
Exhibit 1003, Page 867

[5] GOVERNOR

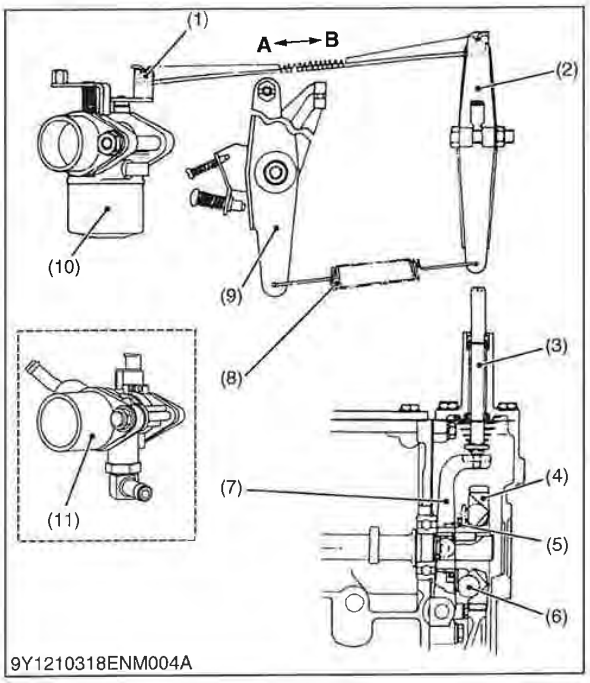

The engine is equipped with a centrifugal ball mechanical governor which activates the throttle in response to engine speed.

When the engine is carrying a load and running at rated speed, the speed will drop if the load is increased even slightly. In this case, the governor automatically opens the throttle valve of the carburetor to maintain the original speed.

Dumping the load suddenly will cause a rapid increase in speed. In this case, the governor automatically moves the throttle valve in closing direction to prevent the engine from increasing its speed.

1) When engine is carrying a load and running at rated speed

When there is no change in load, the centrifugal force of the ball (6) which is attached to the governor gear (4) balances with the tensile force of the governor spring (8) via governor sleeve (5), fork lever (7), governor lever shaft (3) and governor lever (2). The engine speed and output are thus kept constant.

2) When load is applied to engine

When the load is applied to the engine running at rated speed, the speed of the governor gear (4) which is connected to the idle gear decreases. As a result, the centrifugal force of the ball (6) becomes smaller. The tensile force of the spring (8) overcomes the centrifugal force, and the governor lever (2) causes the throttle lever (1) to move in the open direction (**B**). The original engine speed is thus maintained.

3) When load is dumped

When the load is dumped suddenly, the centrifugal force of the ball (6) overcomes the tensile force of the spring (8). As a result, the governor lever (2) causes the throttle lever (1) to move in the shut direction (**A**) and prevents the engine from increasing its speed.

(1) Throttle Lever
(2) Governor Lever
(3) Governor Lever Shaft
(4) Governor Gear
(5) Governor Sleeve
(6) Ball
(7) Fork Lever
(8) Governor Spring
(9) Speed Control Lever
(10) WG Carburetor, DF Carburetor
(11) DG Gas Mixer

A : Shut Direction
B : Open Direction

9Y1210318ENM0038US0

[6] INLET MANIFOLD

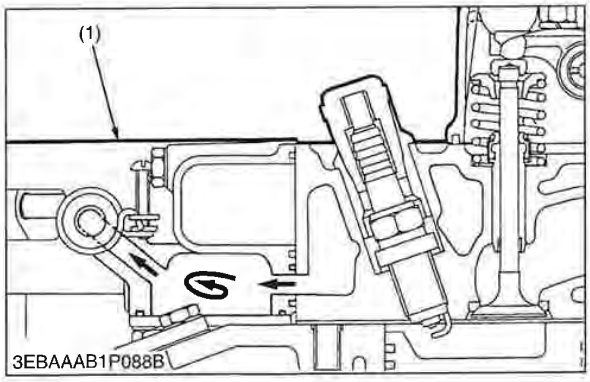

Part of coolant heated in the water jacket is channeled to the inlet manifold, where the hot coolant heats the fuel-air mixture for better carburation. Heating effect is particularly good when the engine is running at low speeds and with light load is cold weather, thus improving fuel economy and acceleration.

(1) Intake Manifold

9Y1210318ENM0039US0

Petitioner MWE Investments, LLC, et al.
Exhibit 1003, Page 868

[7] FUEL FILTER (FOR GASOLINE LINE)

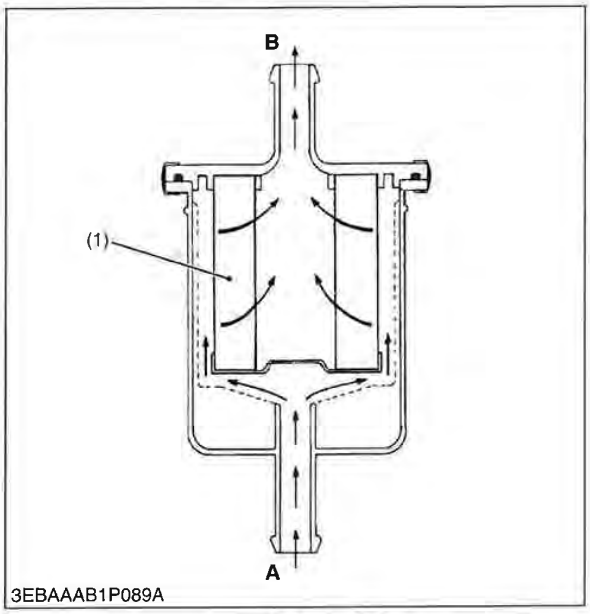

3EBAAAB1P089A

The fuel filter is installed in the fuel line between the fuel tank and the feed pump.

As the fuel flows from the inlet (**A**) through the filter element (1), the dirt and impurities in the fuel are filtered, allowing only clean fuel to penetrate the inside of the filter element. The cleaned fuel flows out from the outlet (**B**).

Type of filter element	Accordion-pleated paper type
Material of filter element	Cotton fiber
Filter mesh	15 μm (0.00059 in.)

(1) Filter Element

A : Inlet
B : Outlet

9Y1210318ENM0040US0

[8] ELECTRO MAGNETIC FUEL FEED PUMP (FOR GASOLINE LINE)

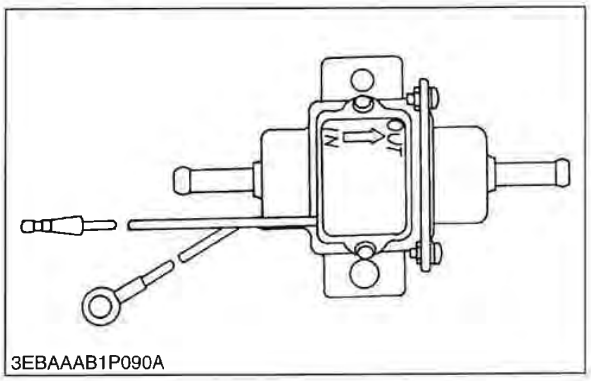

3EBAAAB1P090A

An electro magnetic pump uses a transistor that causes the pump to start pumping fuel when the engine is switched on.

Therefore, fuel is supplied to the carburetor regardless of engine speed. This pump is driven by the battery. It can therefore be operated even with the engine being stopped.

9Y1210318ENM0041US0

Petitioner MWE Investments, LLC, et al.
Exhibit 1003, Page 869

5. IGNITION SYSTEM

[1] DEGITAL IGNITION SYSTEM

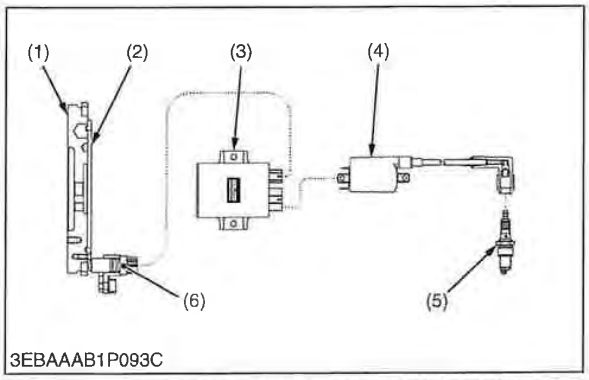

3EBAAAB1P093C

3EBAAAB1P092C

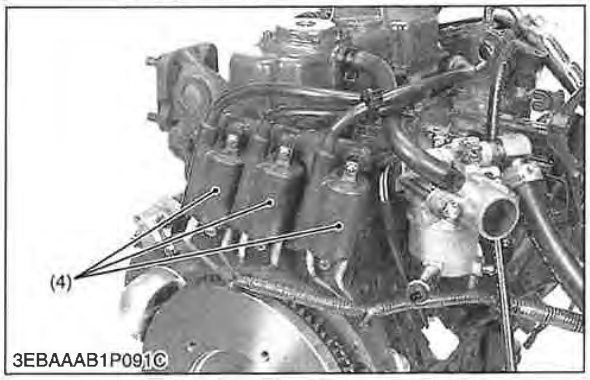

3EBAAAB1P091C

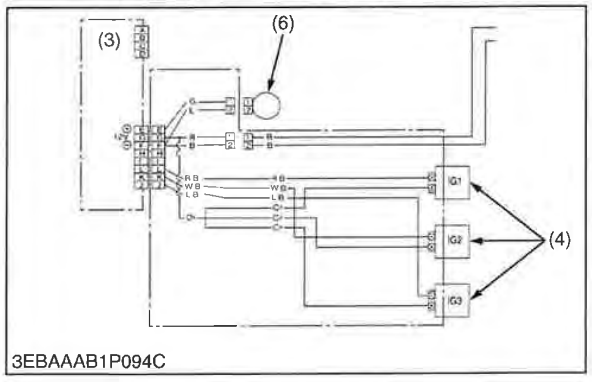

3EBAAAB1P094C

General

The function of an ignition system is to provide the electrical spark that ignites the air/fuel mixture in the cylinder at precisely the correct time.

For this purpose, the pick-up sensor (6) detects voltage waveform according to the shape of the rotor (2) that is built into the flywheel (1). The voltage waveform signal is fed to the igniter (3), in which the signal is converted by a microprocessor to the angular and rpm data that corresponds to each cylinder. Based on this information, an optimum timing is figured out by the microprocessor to cut off the current that flows to the ignition coil (4) of each cylinder. The duration of current flowing to the ignition coil (4) is also controlled. In this way, a high voltage is generated at the secondary winding of the ignition coil (4), which activates the spark plug (5).

Without any mechanical contact, the ignition system is digitally microprocessor-controlled for greater reliability and higher precision.

- Control at ignition time :
  The ignition time is controlled according to the engine speed.
- Control at energizing time :
  The energizing time of the ignition coil is controlled according to the engine speed.
- Lock prevention :
  Intercept the current of the coil for the damage prevention of the coil when the ignition switch is energized to the coil as turning on.
- Lock prevention :
  Intercept the current of the coil for the damage prevention of the coil when the ignition switch is energized to the coil as turning on.

(1)	Flywheel	(4)	Ignition Coil
(2)	Rotor	(5)	Spark Plug
(3)	Ignitor	(6)	Pick-up Sensor

9Y1210318ENM0042US0

Petitioner MWE Investments, LLC, et al.
Exhibit 1003, Page 870

6. ELECTRICAL SYSTEM

[1] STARTING SYSTEM

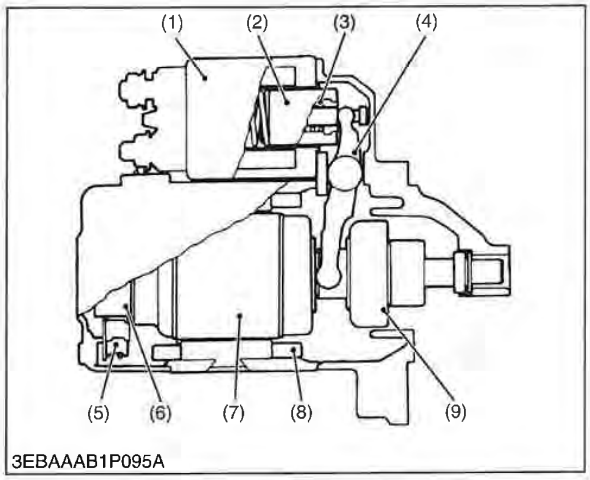

3EBAAAB1P095A

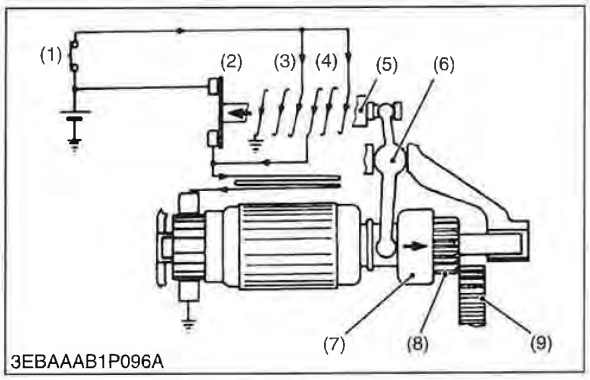

3EBAAAB1P096A

Starter

The starter is the electromagnetic drive type.

Type of motor	DC, Series-wound, Electromagnetic drive
Nominal output	12V
Nominal output	1.0 kW
Nominal output	30 seconds (Do not rotate continuously for longer periods.)
Direction of rotation	Clockwise as viewed from pinion side

(1) Solenoid Switch
(2) Plunger
(3) Spring
(4) Shift Lever
(5) Brush
(6) Commutator
(7) Armature
(8) Field Coil
(9) Overrunning Clutch

9Y1210318ENM0043US0

Operation of Starter

[When key switch is turned to "START" position]

The contacts of key switch (1) close and the holding coil (3) is connected to the battery to pull the plunger (5).

The pull-in coil (4) and the starting motor are also connected to the battery.

The pinion (8) is pushed against the ring gear (9) with the overrunning clutch (7) by the shift lever (6) and the magnetic switch is closed.

[When the solenoid switch is closed]

The current from the battery flows through the solenoid switch (2) to the starting motor.

The pinion (8), which is pushed against the ring gear (9) and rotated along the spline, meshes with the ring gear to crank the engine.

The engine starts and increases its speed.

While the pinion spins faster than the armature, the overrunning clutch (7) allows the pinion to spin independently from the armature.

The pull-in coil (4) is short-circuited through the solenoid switch (2) and the key switch (1).

[When the key switch is released]

The current from the battery flows to the holding coil (3) through the pull-in coil (4) to diminish the magnetism between them.

The plunger (5) is pushed by the spring to pull in the pinion.

(1) Key Switch
(2) Solenoid Switch
(3) Holding Coil
(4) Pull-in Coil
(5) Plunger
(6) Shift Lever
(7) Overrunning Clutch
(8) Pinion
(9) Ring Gear

9Y1210318ENM0044US0

Petitioner MWE Investments, LLC, et al.
Exhibit 1003, Page 871

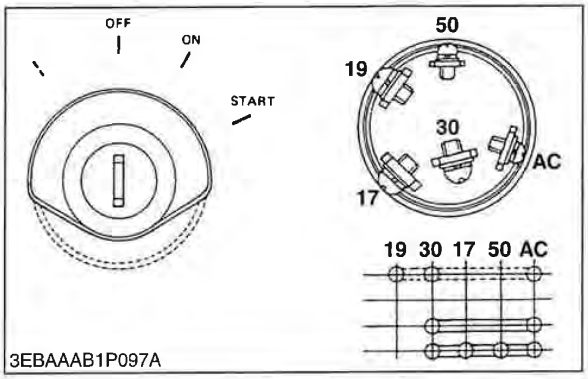

3EBAAAB1P097A

Key Switch

The key switch has 4 positions. The terminal **"30"** is connected to the battery.

It is released at the **"START"** position and returns to the **"ON"** position.

[START]

When the key is turned to the **"START"** position, through the **"ON"** position the current supplied to the starter to regulator, oil lamp and accessory.

50 to starter
30 from battery
AC to regulator, oil lamp and accessory

[ON]

Only the terminal **"AC"** is connected to the battery. At any position of the key except the **"OFF"** position, the terminal **"AC"** is connected to the **"30"** terminal.

30 from battery
AC to regulator, oil lamp and accessory

9Y1210318ENM0045US0

[2] CHARGING SYSTEM

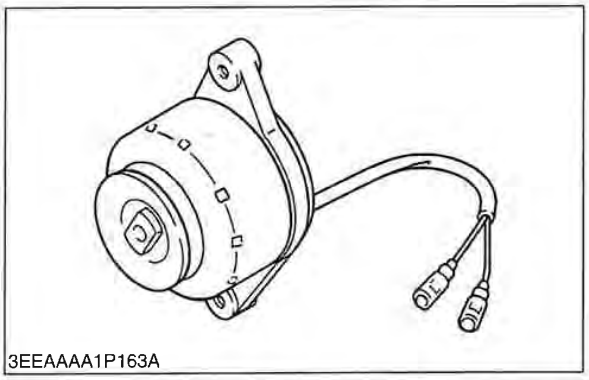
3EEAAAA1P163A

Alternator

This alternator is an 8-8 pole rotating magnet type generator. It is simple in construction, consisting of a stator and rotor. The rotor is made up of eight permanent magnet pole pieces assembled on a shaft and rotates on the center of the stator around which eight electromagnetic coils are provided for. This alternator produces higher voltage in slow speed rotation, and charges electric current to the battery during engine idling.

9Y1210318ENM0046US0

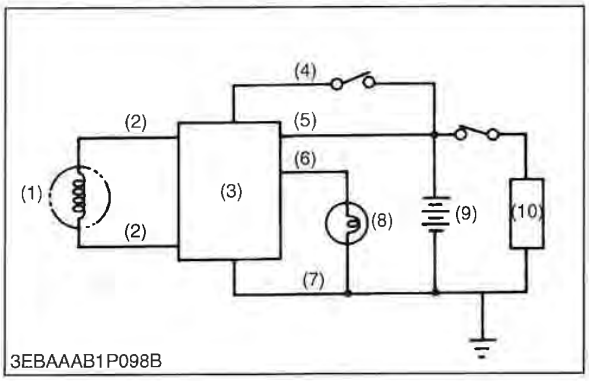

3EBAAAB1P098B

Regulator

The regulator performs rectification and voltage regulation. The regulator converts AC into DC which flows through the power consuming circuits and the battery, and also charges the battery. If however, the battery voltage exceeds a certain level. The DC current is cut off from the charging circuit to prevent overcharging.

Model	RS5155
Part No.	RP201-53710
Weight	Approx. 200 g
Regulated voltage	14 to 15 V
Battery to be used	12 V, 28 AH
Charge indication lamp	12 V. 3.4 W
Alternator to be used	Under 100 V of peak value of no-load voltage Under 16 A of output current

(1) Alternator
(2) Blue Lead Wire
(3) Regulator
(4) Yellow Lead Wire
(5) Red Lead Wire
(6) Overrunning Clutch
(7) Black Lead Wire
(8) Charge Lamp
(9) Battery
(10) Load

9Y1210318ENM0047US0

Petitioner MWE Investments, LLC, et al.
Exhibit 1003, Page 872

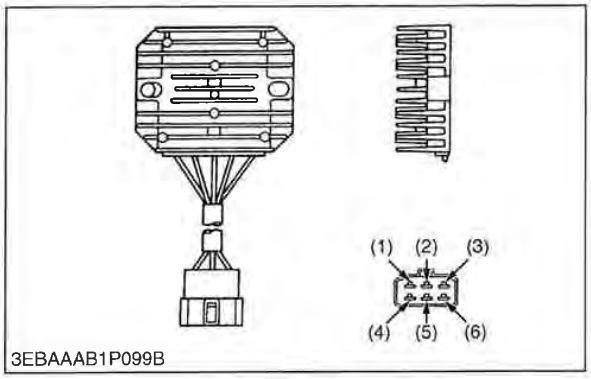

3EBAAAB1P099B

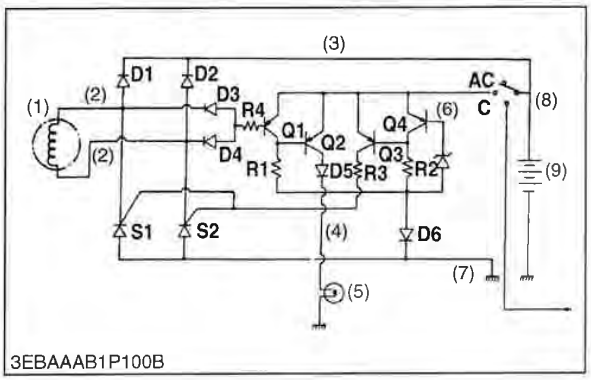

3EBAAAB1P100B

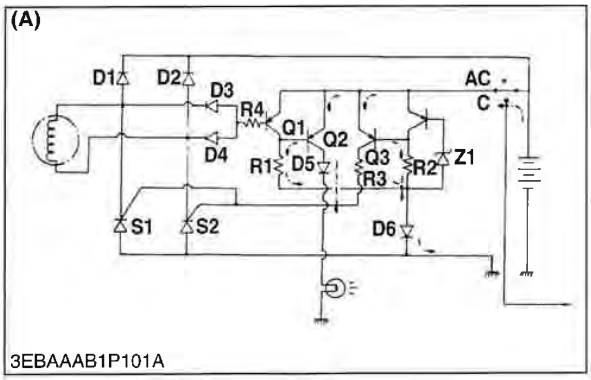

3EBAAAB1P101A

Features

1. This small-sized regulator can control large output current because charging current is supplied and stopped by thyristor (series system).
2. Built-in AC diode generation detecting circuit permits a charge indication lamp (12 V, 3.4 W) to be easily connected.
3. Protection diode protects regulator when battery is wrongly connected.

(1)	Blue Lead Wire	(4)	Green Lead Wire
(2)	Black Lead Wire	(5)	Yellow Lead Wire
(3)	Blue Lead Wire	(6)	Red Lead Wire

9Y1210318ENM0048US0

Charging Mechanism

The charging mechanism is described in four sections.

1. When key switch is **"ON"**.
2. At starting
3. In charging
4. Over-charge protection

(1) GEN : Magnet type AC generator
(2) Blue : GEN connecting terminal
(3) Red : BATT + connecting terminal
(4) Green : LAMP connecting terminal
(5) LAMP : Charge indication lamp (not included in the basic engine)
(6) Yellow : BATT voltage test terminal
(7) Black : BATT - connecting terminal
(8) KEY SW : Key switch
(9) BATT : Battery (not included in the basic engine)

S1, S2 : Output control / rectification thyristor (SCR)
D1, D2 : Output rectifying diode
D3, D4 : GEN generation detecting diode
D5, D6 : Protection diode for wrong connecting of BATT
Z1 : BATT terminal voltage setting diode
Q1 : GEN generation detecting transistor
Q2 : LAMP on / off transistor
Q3 : Gate current control transistor
Q4 : BATT voltage detecting transistor

9Y1210318ENM0049US0

1. When Key Switch is "ON"

When the engine is at standstill with key switch set at position 1, the circuit functions to light LAMP, as shown in figure **(A)**. With key switch at position 1, current flows to base of **Q2** through the route of BATT → emitter / base of **Q2** → **R1** → **D6** → BATT and collector of **Q2** is then turned on. As a result, current also flows to LAMP through the route of BATT → emitter / collector of **Q2** → **D5** → LAMP → BATT lighting LAMP to indicate that charging is not carried out. At this time, through current flows to base of **Q3** through the route of BATT → emitter / base of **Q3** → **R2** → **D6** → BATT, collector of **Q3** has no current because GEN is stationary.

9Y1210318ENM0050US0

Petitioner MWE Investments, LLC, et al.
Exhibit 1003, Page 873

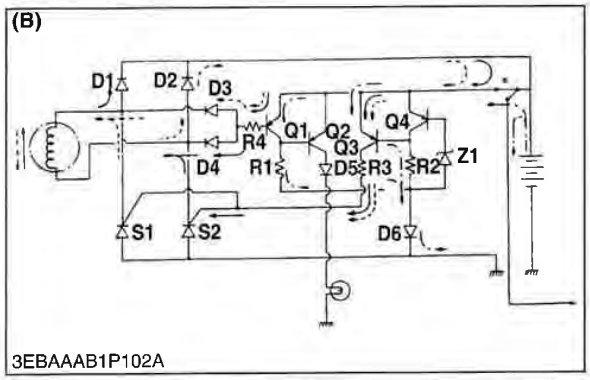

3EBAAAB1P102A

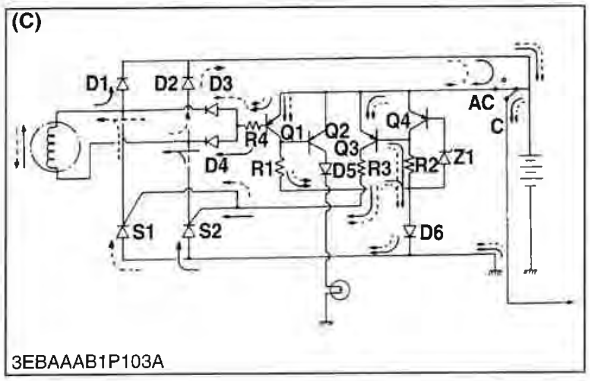

3EBAAAB1P103A

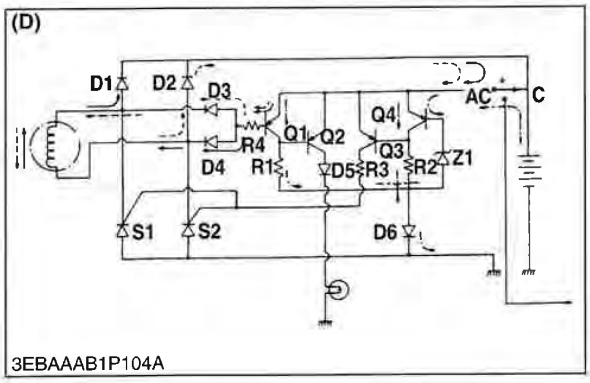

3EBAAAB1P104A

2. At Starting

When key switch is turned to position 2, coil of starter relay is energized and starter starts engine. GEN also starts generation for charging and LAMP is turned off.

In detail, with GEN starting, current flows to base of **Q1** through the route of GEN → **D1** → emitter / base of **Q1** → **R4** → **D4** → GEN, or GEN → **D2** → emitter / base of **Q1** → **R4** → **D3** → GEN, and therefore current also flows through **Q1**, shortcircuiting emitter and base of **Q2**. As a result, base current of **Q2** is interrupted, **Q2** is turned off and accordingly current to LAMP is also interrupted.

9Y1210318ENM0051US0

3. In Charging

Because BATT terminal voltage just after engine start is lower than setting value (14 to 15 V), or lower than zener level of **Z1**, current is not supplied to base of **Q4** and **Q4** is off, as shown in figure **(B)**. **Q3** is on with base current which flows through the route of BATT → emitter / base of **Q3** → **R2** → **D6** → BATT, and gate current is supplied to **S1** or **S2** through the route of GEN → **D1** → emitter / collector of **Q3** → **R3** → gate / cathode of **S2** → GEN, or GEN → **D2** emitter / collector of **Q3** → **R3** → gate / cathode of **S1** → GEN.

When engine speed is increased so that GEN generation voltage becomes higher than BATT terminal voltage, **S1** or **S2** is turned on and, as shown in figure **(C)**, charge current is supplied to BATT through the route of GEN → **D1** → BATT → anode / cathode of **S2** → GEN, or GEN → **D2** → BATT → anode / cathode of **S1** → GEN.

After **S1** or **S2** is turned on, collector current of **Q1** and base current of **Q3** are supplied by GEN, not BATT.

When key switch is turned to position 1 after engine is started, BATT is charged, if BATT terminal voltage is lower than the setting value, or zener level of **Z1**.

9Y1210318ENM0052US0

4. Over-Charge Protection

When BATT terminal voltage is higher than the setting value or zener level of **Z1**, BATT is not charged by the function of circuit as shown in figure **(D)**. That is, **Q4** is on with base current which flows through the route of BATT → emitter / base of **Q4** → **Z1** → **D6** → BATT, shortcircuiting emitter and base of **Q3**. Therefore, **Q3** is off with no base current and gate current is not supplied to **S1** and **S2**. Consequently **S1** and **S2** are off and BATT is not charged.

9Y1210318ENM0053US0

Petitioner MWE Investments, LLC, et al.
Exhibit 1003, Page 874

[3] SOLENOID

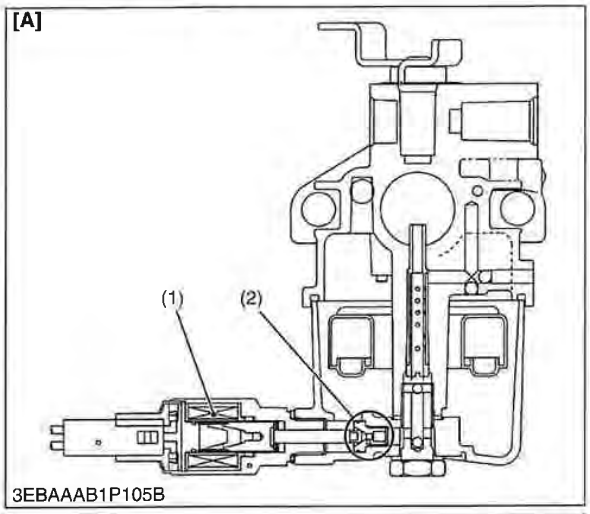

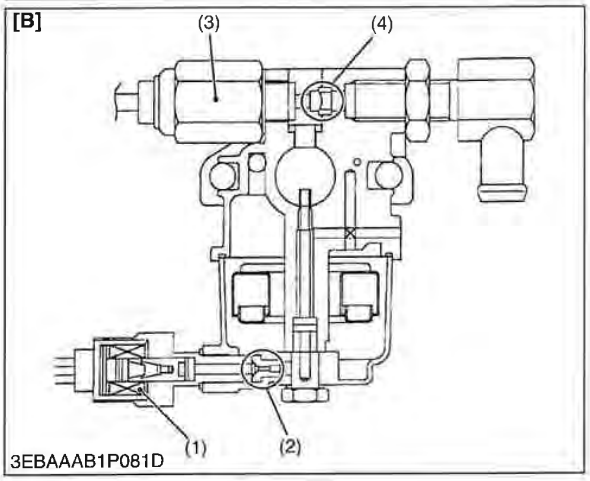

When the key switch is turned on, a current flows to the solenoid, which in turn opens the solenoid valve.

When the key switch is turned off, the solenoid valve closes, blocking the gasoline main jet (2) / LPG main jet (4).

(1) Gasoline Solenoid Valve
(2) Gasoline Main Jet
(3) LPG Solenoid Valve
(4) LPG Main Jet

[A] WG972-E2
[B] DF972-E2

9Y1210318ENM0054US0

Petitioner MWE Investments, LLC, et al.
Exhibit 1003, Page 875

7. ELECTRONIC GOVERNOR

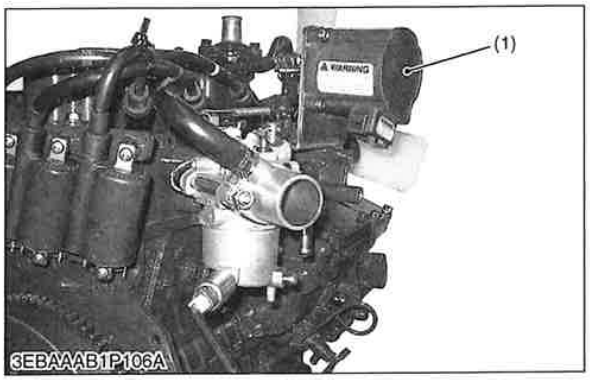

Electronic governor combines the electric actuator with integrated speed control software to control the speed of the engine. Electronic governor is a microprocessor-based control that is incorporated into the actuator, creating a single integrated package. This eliminates the need for an additional driver box and speed control box.

(1) Actuator

9Y1210318ENM0055US0

Petitioner MWE Investments, LLC, et al.
Exhibit 1003, Page 876

SERVICING

CONTENTS

1. TROUBLESHOOTING 1-S1
   [1] FOR GENERAL 1-S1
   [2] FOR GASOLINE FUEL 1-S2
   [3] FOR LPG FUEL 1-S2
   [4] FOR NATURAL GAS FUEL 1-S3
   [5] FOR ELECTRONIC GOVERNOR 1-S4
2. SERVICING SPECIFICATIONS 1-S7
3. TIGHTENING TORQUES 1-S13
   [1] TIGHTENING TORQUES FOR SPECIAL USE SCREWS, BOLTS AND NUTS 1-S13
   [2] TIGHTENING TORQUES FOR GENERAL USE SCREWS, BOLTS AND NUTS 1-S14
4. CHECKING, DISASSEMBLING AND SERVICING 1-S15
   [1] CHECKING AND ADJUSTING 1-S15
      (1) Engine Body 1-S15
      (2) Lubricating System 1-S18
      (3) Cooling System 1-S18
      (4) Fuel System 1-S20
      (5) Ignition System 1-S24
      (6) Electrical System 1-S28
      (7) Electronic Governor 1-S30
   [2] DISASSEMBLING AND ASSEMBLING 1-S31
      (1) Draining Coolant and Engine Oil 1-S31
      (2) External Components 1-S32
      (3) Cylinder Head, Valves and Oil Pan 1-S37
      (4) Thermostat 1-S40
      (5) Timing Gear, Camshaft and Fuel Camshaft 1-S41
      (6) Piston and Connecting Rod 1-S43
      (7) Crankshaft 1-S45
      (8) Starter 1-S48
      (9) Dynamo 1-S49
      (10) Alternator 1-S50
   [3] SERVICING 1-S51
      (1) Cylinder Head and Valves 1-S51
      (2) Timing Gear and Camshaft 1-S56
      (3) Piston and Connecting Rod 1-S59
      (4) Crankshaft 1-S61
      (5) Cylinder 1-S65
      (6) Oil Pump 1-S66
      (7) Starter 1-S67
      (8) Alternator 1-S69

1. TROUBLESHOOTING

[1] FOR GENERAL

Symptom	Probable Cause	Solution	Reference Page
Engine Will Not Turn Over	Engine jammed	Check engine to find the problem and repair it	–
	Battery discharged	Charge	–
	Starter malfunctioning	Repair or replace	1-S28
	Wires disconnected	Reconnect	–
Engine Turns Over Slowly but Does Not Start	Increased resistance of moving parts	Repair or replace	–
	Excessively high viscosity engine oil at low temperature	Use specified engine oil	G-8
Engine Turns Over at Normal Speed but Does Not Start	Compression leak	Check the compression pressure and repair	1-S15
	Improper valve clearance	Adjust	1-S17
	Defective ignition coil	Replace	1-S26
	Defective spark plug	Adjust spark plug gap or replace	G-13
	Defective ignitor	Replace	1-S27
	Clogged air cleaner	Clean or replace	G-11, G-12
Rough Low-Speed Running and Idling	Defective ignition coil	Replace	1-S26
	Defective spark plug	Adjust spark plug gap or replace	G-13
	Defective ignitor	Replace	1-S27
	Incorrect governor adjustment	Adjust	1-S20
	Improper valve clearance	Adjust	1-S17
Rough High-Speed Running	Defective ignitor	Replace	1-S27
	Defective spark plug	Adjust spark plug gap or replace	G-13
	Defective ignition coil	Replace	1-S26
	Incorrect governor adjustment	Adjust	1-S20
Engine Speed Does Not Increase	Incorrect governor adjustment	Adjust	1-S20
	Defective ignitor	Replace	1-S27
	Clogged air cleaner	Clean or replace	G-11, G-12
Deficient Output	Improper intake or exhaust valve sealing	Replace	1-S53, 1-S54
	Incorrect governor adjustment	Adjust	1-S20
	Excessive carbon in engine	Remove carbon	–
	Improper valve clearance	Adjust	1-S17
	Piston ring and cylinder worn	Replace	1-S60, 1-S65
	Clogged air cleaner	Clean or replace	G-11, G-12

Petitioner MWE Investments, LLC, et al.
Exhibit 1003, Page 878

Symptom	Probable Cause	Solution	Reference Page
Engine Noise	Improper valve clearance	Adjust	1-S17
	Spark knock due to low-octane fuel or carbon	Use higher-octane fuel and remove carbon	–
	Rattles from loosely mounted external components	Retighten	–

9Y1210318ENS0001US0

[2] FOR GASOLINE FUEL

Symptom	Probable Cause	Solution	Reference Page
Engine Turns Over at Normal Speed but Does Not Start	No fuel	Replenish fuel	–
	Defective fuel system	Check fuel line and carburetor and repair	–
	Over choked	Clean spark plug	–
	Flooding from carburetor	Check carburetor and repair / replace	–
Rough Low-Speed Running and Idling	Incorrect carburetor idle adjustment	Adjust	1-S21
Engine Speed Does Not Increase	Incorrect carburetor adjustment	Adjust	1-S21

9Y1210318ENS0002US0

[3] FOR LPG FUEL

Symptom	Probable Cause	Solution	Reference Page
Engine Turns Over at Normal Speed but Does Not Start	No LPG fuel	Replenish LPG fuel Check LPG tank valve Check shut off solenoid valve	–
	Defective vacuum lock system	Check vacuum hose Replace vaporizer	1-S24
	Defective throttle lever position	Set throttle lever to the low idle position	1-S21
Rough Low-Speed Running and Idling	Shortage of gas supply	Replenish LPG fuel Check shut off solenoid valve	–
	Defective idling	Replace vaporizer Draining tar from vaporizer	G-19, G-22
Defection Output	LPG density is rich	Replace vaporizer	–
	Shortage LPG	Repair or replace of fuel system Replace vaporizer	–

9Y1210318ENS0003US0

Petitioner MWE Investments, LLC, et al.
Exhibit 1003, Page 879

[4] FOR NATURAL GAS FUEL

Symptom	Probable Cause	Solution	Reference Page
Engine Turns Over at Normal Speed but Does Not Start	No fuel	Check gas source Check shut off solenoid valve	–
	Defective fuel system	Check fuel system and repair	–
Rough Low-Speed Running and Idling	Shortage of gas supply	Check gas source Check shut off solenoid valve	–
	Defective idling	Replace regulator Draining tar from regulator	–
Defection Output	Gas density is rich	Replace regulator	–
	Shortage gas	Repair or replace of fuel system Replace regulator	–

9Y1210318ENS0004US0

Petitioner MWE Investments, LLC, et al.
Exhibit 1003, Page 880

[5] FOR ELECTRONIC GOVERNOR

■ **NOTE**

- **This troubleshooting describe the procedure which does not use the service tool (soft wear).**

Engine does not start : Step 1

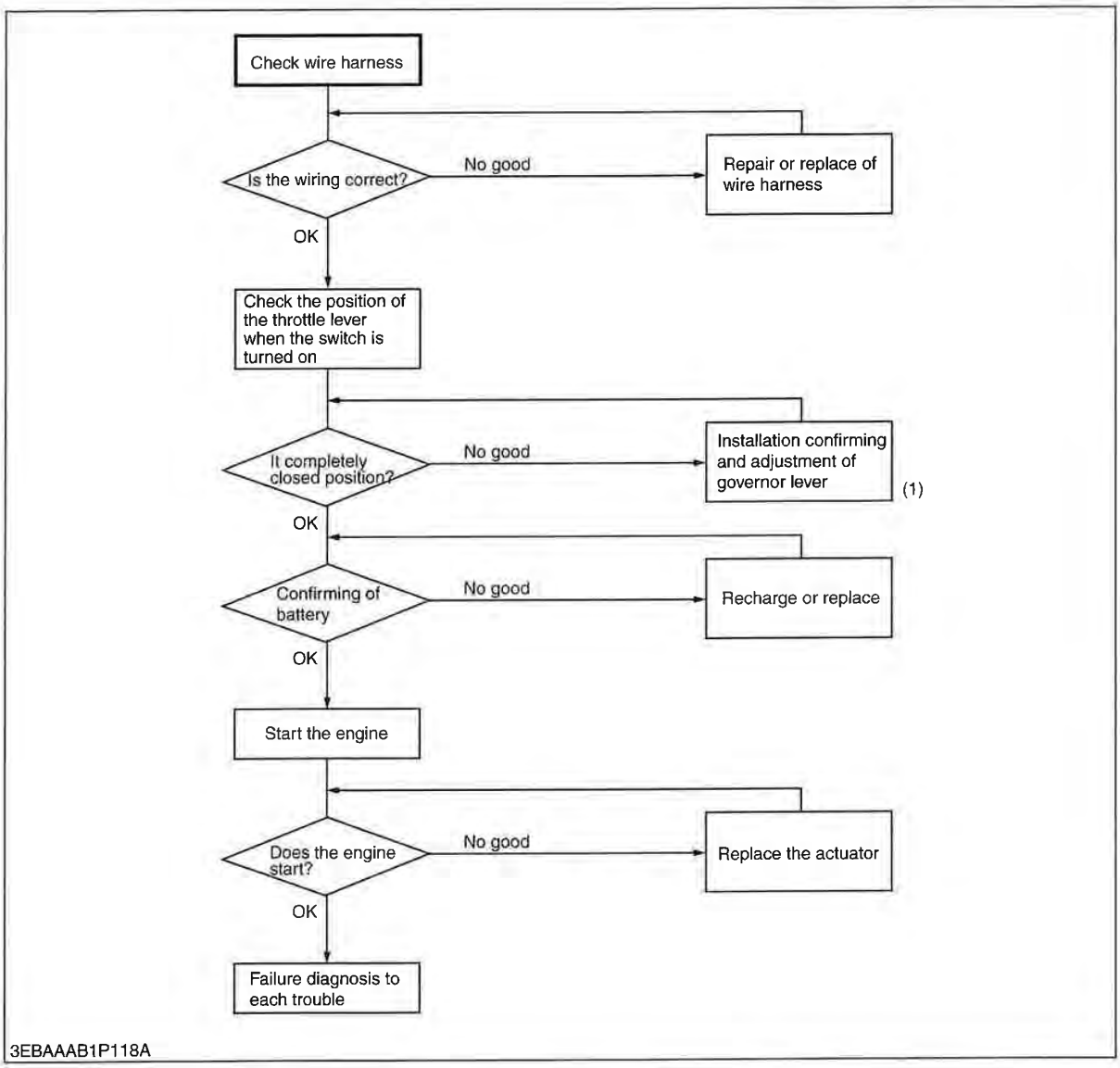

(1) Refer to [Adjust Governor Lever of Electronic Governor]

9Y1210318ENS0005US0

Petitioner MWE Investments, LLC, et al.
Exhibit 1003, Page 881

Engine does not start : Step 2

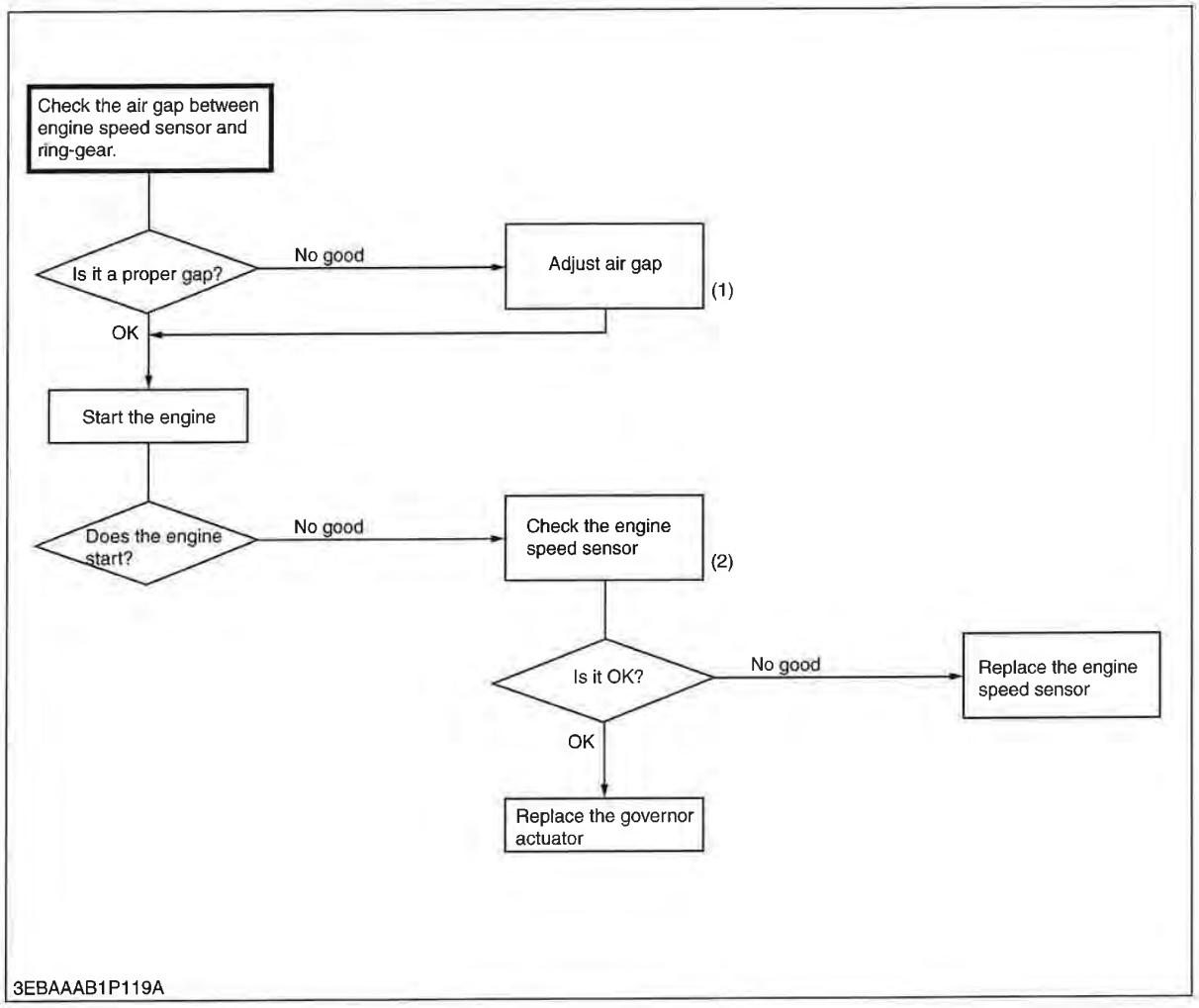

(1) Refer to the [Air Gap of Engine Speed Sensor for Electronic Governor]
(2) Refer to the [Resistance of Engine Speed Sensor for Electronic Governor]

9Y1210318ENS0006US0

Petitioner MWE Investments, LLC, et al.
Exhibit 1003, Page 882

Engine unstable

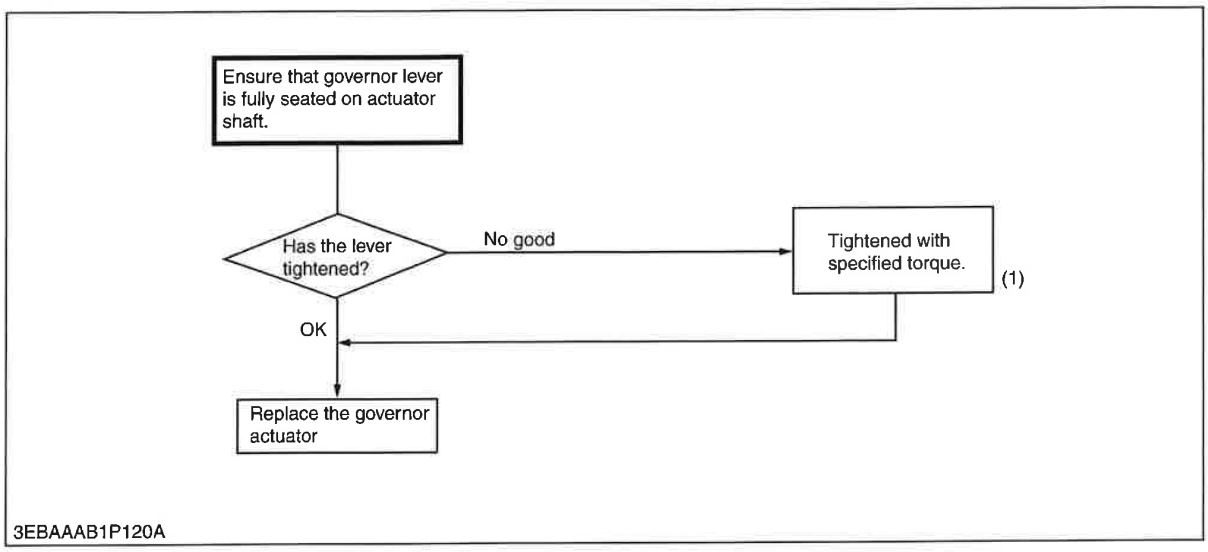

(1) Refer to the [Adjust Governor Lever of Electronic Governor]

9Y1210318ENS0007US0

Petitioner MWE Investments, LLC, et al.
Exhibit 1003, Page 883

2. SERVICING SPECIFICATIONS

ENGINE BODY

Item		Factory Specification	Allowable Limit
Valve Clearance (Cold)		0.145 to 0.185 mm 0.00571 to 0.00728 in.	–
Compression Pressure	–	1.27 MPa 13.0 kgf/cm^2 185 psi	0.88 MPa 9.0 kgf/cm^2 130 psi
	Variance Among Cylinder	–	10 % or less
Top Clearance		1.35 to 1.65 mm 0.0532 to 0.0649 in.	–
Cylinder Head Surface	Flatness	–	0.05 mm 0.002 in.
Valve Recessing (Intake and Exhaust)		−0.10 to 0.10 mm −0.0039 to 0.0039 in.	0.30 mm 0.012 in.
Valve Stem to Valve Guide	Clearance	0.030 to 0.057 mm 0.0012 to 0.0022 in.	0.10 mm 0.0039 in.
• Valve Stem	O.D.	5.968 to 5.980 mm 0.2350 to 0.2354 in.	–
• Valve Guide	I.D.	6.010 to 6.025 mm 0.2367 to 0.2372 in.	–
Valve Face	Angle	0.79 rad 45 °	–
Valve Seat	Angle	0.79 rad 45 °	–
	Width	2.12 mm 0.0835 in.	–
Valve Timing (Intake Valve)	Open	0.35 rad 20 ° before T.D.C.	–
	Close	0.79 rad 45 ° after B.D.C.	–
Valve Timing (Exhaust Valve)	Open	0.87 rad 50 ° before B.D.C.	–
	Close	0.26 rad 15 ° after T.D.C.	–
Valve Spring	Free Length	31.3 to 31.8 mm 1.24 to 1.25 in.	28.4 mm 1.12 in.
	Tilt	–	1.0 mm 0.039 in.
	Setting Load / Setting Length	65 N / 27.0 mm 6.6 kgf / 27.0 mm 15 lbf / 1.06 in.	55 N / 27.0 mm 5.6 kgf / 27.0 mm 12 lbf / 1.06 in.

Petitioner MWE Investments, LLC, et al.
Exhibit 1003, Page 884

Item		Factory Specification	Allowable Limit
Rocker Arm Shaft to Rocker Arm	Oil Clearance	0.016 to 0.045 mm 0.00063 to 0.0017 in.	0.15 mm 0.0059 in.
• Rocker Arm Shaft	O.D.	10.473 to 10.484 mm 0.41233 to 0.41275 in.	–
• Rocker Arm	I.D.	10.500 to 10.518 mm 0.41339 to 0.41409 in.	–
Push Rod	Alignment	–	0.25 mm 0.0098 in.
Tappet to Tappet Guide Bore	Oil Clearance	0.016 to 0.052 mm 0.00063 to 0.0020 in.	0.10 mm 0.0039 in.
• Tappet	O.D.	17.966 to 17.984 mm 0.70733 to 0.70803 in.	–
• Tappet Guide Bore	I.D.	18.000 to 18.018 mm 0.70867 to 0.70937 in.	–
Timing Gear • Crank Gear to Idle Gear	Backlash	0.0430 to 0.124 mm 0.00170 to 0.00488 in.	0.15 mm 0.0059 in.
• Idle Gear to Cam Gear	Backlash	0.0470 to 0.123 mm 0.00185 to 0.00484 in.	0.15 mm 0.0059 in.
• Idle Gear to Injection Pump Gear	Backlash	0.0410 to 0.124 mm 0.00162 to 0.00488 in.	0.15 mm 0.0059 in.
• Crank Gear to Oil Pump Drive Gear	Backlash	0.0410 to 0.123 mm 0.00162 to 0.00484 in.	0.15 mm 0.0059 in.
Idle Gear	Side Clearance	0.20 to 0.51 mm 0.0079 to 0.020 in.	0.80 mm 0.031 in.
Camshaft	Side Clearance	0.15 to 0.31 mm 0.0059 to 0.012 in.	0.50 mm 0.020 in.
	Alignment	–	0.01 mm 0.0004 in.
	Cam Height (Intake and Exhaust)	26.88 mm 1.058 in.	26.83 mm 1.056 in.
Camshaft Journal to Cylinder Block Bore	Oil Clearance	0.050 to 0.091 mm 0.0020 to 0.0035 in.	0.15 mm 0.0059 in.
• Camshaft Journal	O.D.	32.934 to 32.950 mm 1.2967 to 1.2972 in.	–
• Cylinder Block Bore	I.D.	33.000 to 33.025 mm 1.2993 to 1.3001 in.	–
Idle Gear Shaft to Idle Gear Bushing	Oil Clearance	0.020 to 0.084 mm 0.00079 to 0.0033 in.	0.10 mm 0.0039 in.
• Idle Gear Shaft	O.D.	19.967 to 19.980 mm 0.78611 to 0.78661 in.	–
• Idle Gear Bushing	I.D.	20.000 to 20.051 mm 0.78741 to 0.78940 in.	–

Petitioner MWE Investments, LLC, et al.
Exhibit 1003, Page 885

Item		Factory Specification	Allowable Limit
Piston Pin Bore	I.D.	20.000 to 20.013 mm 0.78741 to 0.78791 in.	20.05 mm 0.7894 in.
Piston Pin to Small End Bushing	Oil Clearance	0.012 to 0.038 mm 0.00048 to 0.0014 in.	0.10 mm 0.0039 in.
• Piston Pin	O.D.	20.002 to 20.013 mm 0.78748 to 0.78791 in.	–
• Small End Bushing	I.D.	20.025 to 20.040 mm 0.78839 to 0.78897 in.	–
Piston Pin to Small End Bushing (Spare Parts)	Oil Clearance	0.013 to 0.075 mm 0.00052 to 0.0029 in.	0.15 mm 0.0059 in.
• Small End Bushing	I.D.	20.026 to 20.077 mm 0.78843 to 0.79043 in.	–
Piston Ring Gap	Top Ring	0.15 to 0.35 mm 0.0059 to 0.013 in.	1.25 mm 0.0492 in.
	Second Ring	0.30 to 0.45 mm 0.012 to 0.017 in.	1.25 mm 0.0492 in.
	Oil Ring (Upper and lower rail)	0.20 to 0.70 mm 0.0079 to 0.027 in.	1.25 mm 0.0492 in.
Piston Ring to Piston Ring Groove	Top Ring (Clearance)	0.080 to 0.12 mm 0.0032 to 0.0047 in.	0.15 mm 0.0059 in.
	Second Ring (Clearance)	0.065 to 0.10 mm 0.0026 to 0.0039 in.	0.15 mm 0.0059 in.
	Oil Ring (Clearance)	0.060 to 0.15 mm 0.0024 to 0.0059 in.	0.20 mm 0.0079 in.
Connecting Rod	Alignment	–	0.05 mm 0.002 in.
Crankshaft	Side Clearance	0.15 to 0.31 mm 0.0059 to 0.012 in.	0.50 mm 0.020 in.
	Alignment	–	0.02 mm 0.0008 in.
Crankpin to Crankpin Bearing	Oil Clearance	0.020 to 0.051 mm 0.00079 to 0.0020 in.	0.15 mm 0.0059 in.
• Crankpin	O.D.	33.959 to 33.975 mm 1.3370 to 1.3375 in.	–
• Crankpin Bearing	I.D.	33.995 to 34.010 mm 1.3384 to 1.3389 in.	–
Crankshaft Journal to Crankshaft Bearing 1	Oil Clearance	0.0340 to 0.106 mm 0.00134 to 0.00417 in.	0.20 mm 0.0079 in.
• Crankshaft Journal	O.D.	43.934 to 43.950 mm 1.7297 to 1.7303 in.	–
• Crankshaft Bearing 1	I.D.	43.984 to 44.040 mm 1.7317 to 1.7338 in.	–

Petitioner MWE Investments, LLC, et al.
Exhibit 1003, Page 886

Item		Factory Specification	Allowable Limit
Crankshaft Journal to Crankshaft Bearing 2 (Flywheel Side)	Oil Clearance	0.028 to 0.059 mm 0.0011 to 0.0023 in.	0.20 mm 0.0079 in.
• Crankshaft Journal	O.D.	43.934 to 43.950 mm 1.7297 to 1.7303 in.	–
• Crankshaft Bearing 2	I.D.	43.978 to 43.993 mm 1.7315 to 1.7320 in.	–
Crankshaft Journal to Crankshaft Bearing 3 (Intermediate)	Oil Clearance	0.028 to 0.059 mm 0.0011 to 0.0023 in.	0.20 mm 0.0079 in.
• Crankshaft Journal	O.D.	43.934 to 43.950 mm 1.7297 to 1.7303 in.	–
• Crankshaft Bearing 3	I.D.	43.978 to 43.993 mm 1.7315 to 1.7320 in.	–
Cylinder Liner [Standard]	I.D.	74.500 to 74.519 mm 2.9331 to 2.9338 in.	74.669 mm 2.9397 in.
Cylinder Liner [Oversize : 0.5 mm (0.02 in.)]	I.D.	75.000 to 75.019 mm 2.9528 to 2.9535 in.	75.150 mm 2.9587 in.

Petitioner MWE Investments, LLC, et al.
Exhibit 1003, Page 887

LUBRICATING SYSTEM

Item		Factory Specification	Allowable Limit
Engine Oil Pressure	At Idle Speed	More than 50 kPa 0.5 kgf/cm^2 7 psi	–
	At Rated Speed	200 to 440 kPa 2.0 to 4.5 kgf/cm^2 29 to 64 psi	150 kPa 1.5 kgf/cm^2 21 psi
Inner Rotor to Outer Rotor	Clearance	0.030 to 0.14 mm 0.0012 to 0.0055 in.	–
Outer Rotor to Pump Body	Clearance	0.070 to 0.15 mm 0.0028 to 0.0059 in.	–
Inner Rotor to Cover	Clearance	0.0750 to 0.135 mm 0.00296 to 0.00531 in.	–

COOLING SYSTEM

Item		Factory Specification	Allowable Limit
Fan Belt	Tension	7.0 to 9.0 mm / 98 N 0.28 to 0.35 in. / 98 N (10 kgf, 22 lbf)	–
Thermostat	Valve Opening Temperature (At Beginning)	69.5 to 72.5 °C 157.1 to 162.5 °F	–
	Valve Opening Temperature (Opened Completely)	85 °C 185 °F	–
Radiator Cap	Pressure Falling Time	More than 10 seconds for pressure fall from 90 → 60 kPa 0.9 → 0.6 kgf/cm^2 10 → 9 psi	–
Radiator	Weak Leakage Test Pressure	No leak at specified pressure	–

IGNITION SYSTEM

Item		Factory Specification	Allowable Limit
Spark Plug (NGK : BKR4E)	Plug Gap	0.60 to 0.70 mm 0.024 to 0.027 in.	–
Resistance of Ignition Coil	Primary (+) - (−)	1.87 to 2.53 Ω at 20 °C	–
	Secondary Side (Primary (+) - Plug Cap)	10.4 to 15.6 kΩ at 20 °C	–
Pick-up Sensor	Resistance	1.85 to 2.45 kΩ at 20 °C	–

Petitioner MWE Investments, LLC, et al.
Exhibit 1003, Page 888

ELECTRICAL SYSTEM

Item		Factory Specification	Allowable Limit
Starter	Commutator (O.D.)	28.0 mm 1.10 in.	27.0 mm 1.06 in.
	Difference (O.D.)	Less than 0.05 mm 0.002 in.	0.4 mm 0.02 in.
	Mica (Undercut)	0.45 to 0.75 mm 0.018 to 0.029 in.	0.2 mm 0.008 in.
	Brush (Length)	14.0 mm 0.551 in.	11.1 mm 0.437 in.
Alternator	No-load Voltage	More than 13.5 V	–
	Stator (Resistance)	Less than 1.0 Ω	–
	Rotor (Resistance)	2.9 Ω	–
	Slip Ring (O.D.)	14.4 mm 0.567 in.	14.0 mm 0.551 in.
	Brush (Length)	10.5 mm 0.413 in.	8.4 mm 0.33 in.
Regulator	Regulating Voltage	14.2 to 14.8 V	–
Fuel Cut Off Solenoid	For Gasoline (Resistance)	38 Ω at 20 °C	–
	For LPG (Resistance)	28 Ω at 20 °C	–

ELECTRONIC GOVERNOR

Item		Factory Specification	Allowable Limit
Engine Speed Sensor to Ring Gear (for Kubota original parts)	Air Gap	0.80 to 1.2 mm 0.031 to 0.047 in.	–
	Resistance	Approx. 2.15 kΩ	–

9Y1210318ENS0008US0

Petitioner MWE Investments, LLC, et al.
Exhibit 1003, Page 889

3. TIGHTENING TORQUES

Screws, bolts and nuts must be tightened to the specified torque using a torque wrench, several screws, bolts and nuts such as those used on the cylinder head must be tightened in proper sequence and the proper torque.

9Y1210318ENS0009US0

[1] TIGHTENING TORQUES FOR SPECIAL USE SCREWS, BOLTS AND NUTS

■ **NOTE**

- **For "*" marked screws, bolts and nuts on the table, apply engine oil to their threads and seats before tightening.**
- **The letter "M" in Size x Pitch means that the screw, bolt or nut dimension stands for metric. The size is the nominal outside diameter in mm of the threads. The pitch is the nominal distance in mm between two threads.**

Item	Dimension × Pitch	N·m	kgf·m	lbf·ft
*Cylinder head cover screw	M6 x 1.0	9.81 to 11.2	1.00 to 1.15	7.24 to 8.31
*Rocker arm bracket screw	M6 x 1.0	12 to 14	1.2 to 1.5	8.7 to 10
*Cylinder head screw	M8 x 1.25	40 to 44	4.0 to 4.5	29 to 32
*Fan drive pulley screw	M12 x 1.5	118 to 127	12.0 to 13.0	86.8 to 94.0
*Idle gear shaft mounting screw	M6 x 1.0	9.81 to 11.2	1.00 to 1.15	7.24 to 8.31
*Connecting rod screw	M7 x 0.75	27 to 30	2.7 to 3.1	20 to 22
*Flywheel screw	M10 x 1.25	54 to 58	5.5 to 6.0	40 to 43
Bearing case cover mounting screw	M6 x 1.0	9.81 to 11.2	1.00 to 1.15	7.24 to 8.31
*Main bearing case screw 2	M7 x 1.0	27 to 30	2.7 to 3.1	20 to 22
*Main bearing case screw 1	M6 x 1.0	13 to 15	1.3 to 1.6	9.4 to 11
Oil pressure switch	PT 1/8	15 to 19	1.5 to 2.0	11 to 14
Spark plug	M14 x 1.25	20 to 24	2.0 to 2.5	15 to 18
Drain plug	M12 x 1.25	33 to 37	3.3 to 3.8	24 to 27
Carburetor mounting nut	M8 x 1.25	24 to 27	2.4 to 2.8	18 to 20
Gas mixer mounting nut	M8 x 1.25	24 to 27	2.4 to 2.8	18 to 20
Joint for LPG hose of vaporizer (local arrangement)	PT - 1/4	20 to 23	2.0 to 4.0	15 to 17
Joint for vapor hose of vaporizer	PT - 3/8	30 to 58	3.0 to 6.0	22 to 43
Joint for coolant hose of vaporizer	PT - 3/8	30 to 58	3.0 to 6.0	22 to 43
Actuator mounting screw	M5 x 0.8	4.5 to 5.3	0.45 to 0.55	3.3 to 3.9
Actuator flange screw	M6 x 1.0	9.81 to 11.2	1.00 to 1.15	7.24 to 8.31
Governor lever nut	M6 x 1.0	9.81 to 11.2	1.00 to 1.15	7.24 to 8.31
Starter's terminal **B** mounting nut	–	5.9 to 11	0.60 to 1.2	4.4 to 8.6
Dynamo's pulley nut	–	40 to 44	4.0 to 4.5	29 to 32
Alternator's pulley nut	–	58.4 to 78.9	5.95 to 8.05	43.1 to 58.2
Gasoline solenoid	–	7.9 to 11	0.80 to 1.2	5.8 to 8.6
Main jet	–	0.98 to 2.8	0.10 to 0.29	0.73 to 2.0
Pilot jet	–	0.98 to 3.9	0.10 to 0.40	0.73 to 2.8

9Y1210318ENS0010US0

Petitioner MWE Investments, LLC, et al.
Exhibit 1003, Page 890

[2] TIGHTENING TORQUES FOR GENERAL USE SCREWS, BOLTS AND NUTS

If the tightening torque is not specified, refer to the table below for the none specified torques values.

Indication on top of bolt	4 No-grade or 4T			7 7T		
Indication on top of nut	04 No-grade or 4T					
Unit	N·m	kgf·m	lbf·ft	N·m	kgf·m	lbf·ft
M6	7.9 to 9.3	0.80 to 0.95	5.8 to 6.8	9.81 to 11.2	1.00 to 1.15	7.24 to 8.31
M8	18 to 20	1.8 to 2.1	13 to 15	24 to 27	2.4 to 2.8	18 to 20
M10	40 to 45	4.0 to 4.6	29 to 33	49 to 55	5.0 to 5.7	37 to 41
M12	63 to 72	6.4 to 7.4	47 to 53	78 to 90	7.9 to 9.2	58 to 66

M00000003ENS0013US1

Petitioner MWE Investments, LLC, et al.
Exhibit 1003, Page 891

4. CHECKING, DISASSEMBLING AND SERVICING

[1] CHECKING AND ADJUSTING

(1) Engine Body

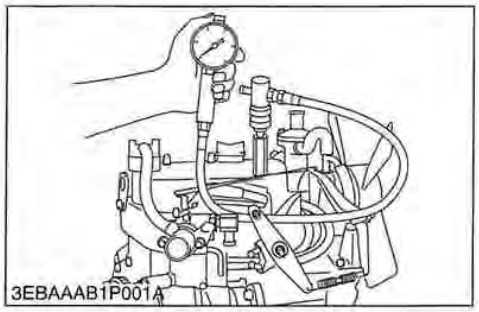

Compression Pressure

1. Run the engine until it is warmed up.
2. Stop the engine.
3. Remove the air cleaner, the muffler and all spark plugs.
4. Set a compression tester with the adaptor to the spark plug hole.
5. Run the engine with the starter for 5 to 10 seconds keeping throttle valve fully open and read the maximum compression pressure.
6. Repeat steps 4 and 5 for each cylinder.
7. If the measurement is below the allowable limit, apply a small amount of oil to the cylinder wall through the spark plug hole and measure the compression pressure again.
8. If the compression pressure is still less than the allowable limit, check the top clearance, valve clearance and cylinder head.
9. If the compression pressure increases after applying oil, check the cylinder wall and piston rings.

■ **NOTE**

- **Check the compression pressure with the specified valve clearance.**
- **Always use a fully charged battery for performing this test.**
- **Variances in cylinder compression values should be under 10 %.**

Compression pressure	Factory spec.	1.27 MPa 13.0 kgf/cm^2 185 psi
	Allowable limit	0.88 MPa 9.0 kgf/cm^2 130 psi

9Y1210318ENS0013US0

Petitioner MWE Investments, LLC, et al.
Exhibit 1003, Page 892

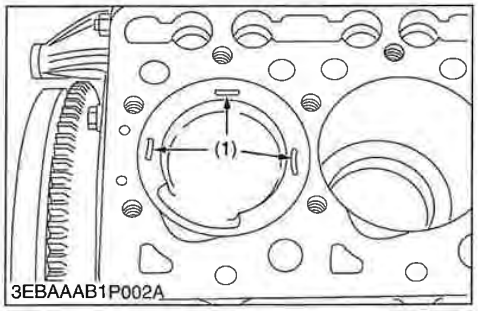

3EBAAAB1P002A

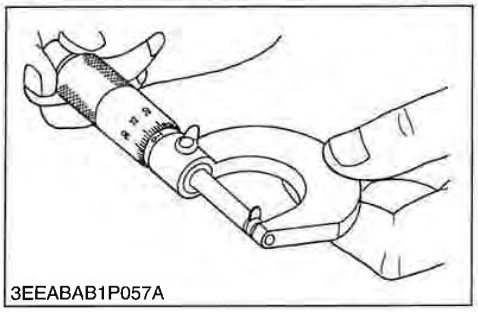
3EEABAB1P057A

Top Clearance

1. Remove the cylinder head. (Do not attempt to remove the cylinder head gasket.)
2. Move the piston up and stick a strip of fuse [1.5 mm dia. (0.059 in. dia.), 5.0 to 7.0 mm long (0.20 to 0.27 in. long)] on the piston head at three positions with grease so as to avoid the intake and exhaust valves and the combustion chamber ports.
3. Lower the piston, and install the cylinder head and tighten the cylinder head screws to the specified torque.
4. Turn the flywheel until the piston exceeds top dead center.
5. Remove the cylinder head, and measure the thickness of the squeezed fuses.
6. If the measurement is not within the factory specifications, check the oil clearance between the crankpin and crankpin bearing and between the piston pin and small end bushing.

■ **NOTE**

- **After checking the top clearance, be sure to assemble the cylinder head with a new cylinder head gasket.**

Top clearance	Factory spec.	1.35 to 1.65 mm 0.0532 to 0.0649 in.

Tightening torque	Cylinder head screws	40 to 44 N·m 4.0 to 4.5 kgf·m 29 to 32 lbf·ft

(1) Fuse

9Y1210318ENS0014US0

Petitioner MWE Investments, LLC, et al.
Exhibit 1003, Page 893

3EEACAA1P061A

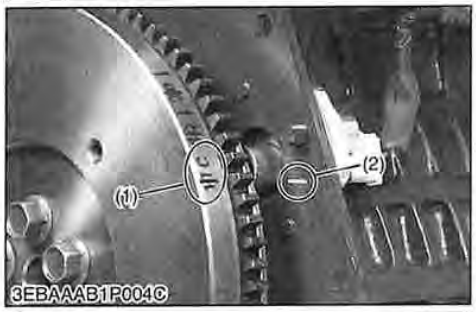

3EBAAAB1P004C

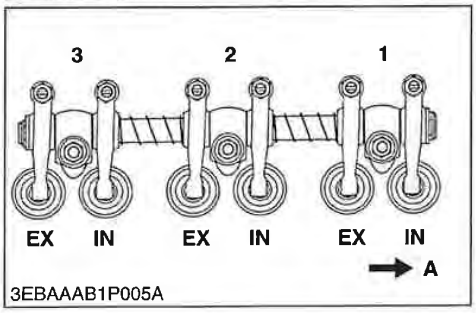

3EBAAAB1P005A

Adjusting the Valve Clearance

■ **IMPORTANT**

- **The valve clearance must be checked and adjusted when engine is cold.**

1. Remove the cylinder head cover and the spark plugs.
2. Align the **"1TC"** mark (1) on the flywheel and alignment mark (2) on the rear end plate so that the No. 1 piston comes to the compression top dead center.
3. Check the following valve clearance marked with "★" using a feeler gauge.
4. If the clearance is not within the factory specifications, adjust with the adjusting screw.
5. Then turn the flywheel 6.28 rad (360 °), and align the **"1TC"** mark (1) on the flywheel and alignment mark (2) on the rear end plate so that the No. 1 piston comes to the overlap position.
6. Check the following valve clearance marked with "☆" using a feeler gauge.
7. If the clearance is not within the factory specifications, adjust with the adjusting screw.

Adjustable Cylinder Location of Piston	Valve Arrangement	
	Intake valve	Exhaust valve
No. 1	★	★
No. 2	☆	★
No. 3	★	☆

★ : When No. 1 piston is at the compression top dead center position.
☆ : When No. 1 piston is at the overlap position.

Intake and exhaust valve clearance (cold)	Factory spec.	0.145 to 0.185 mm 0.00571 to 0.00728 in.

■ **NOTE**

- **The sequence of cylinder numbers is given as No. 1, No. 2 and No. 3 starting from the gear case side.**
- **After adjusting the valve clearance, secure the adjusting screw with the lock nut.**

(1) **"1TC"** Mark
(2) Alignment Mark

A : Gear Case Side

9Y1210318ENS0015US0

Petitioner MWE Investments, LLC, et al.
Exhibit 1003, Page 894

(2) Lubricating System

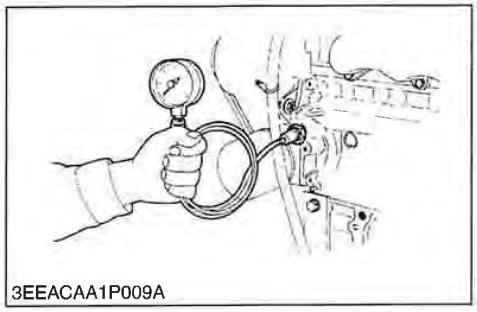
3EEACAA1P009A

Engine Oil Pressure

1. Remove the engine oil pressure switch, and set an oil pressure tester.
2. Start the engine. After warming up, measure the oil pressure of both idling and rated speeds.
3. If the oil pressure is less than the allowable limit, check the following.

- Engine oil insufficient
- Oil pump defective
- Oil strainer clogged
- Oil filter cartridge clogged
- Oil gallery clogged
- Excessive oil clearance
- Foreign matter in the relief valve

(When reassembling)

- After checking the engine oil pressure, tighten the engine oil pressure switch to the specified torque.

Engine oil pressure	At idle speed	Factory spec.	More than 50 kPa 0.5 kgf/cm^2 7 psi
	At rated speed	Factory spec.	200 to 440 kPa 2.0 to 4.5 kgf/cm^2 29 to 64 psi
		Allowable limit	150 kPa 1.5 kgf/cm^2 21 psi

Tightening torque	Oil pressure switch	15 to 19 N·m 1.5 to 2.0 kgf·m 11 to 14 lbf·ft

9Y1210318ENS0016US0

(3) Cooling System

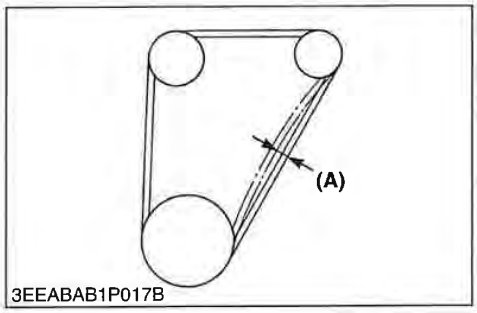

3EEABAB1P017B

Fan Belt Tension

1. Measure the deflection **(A)**, depressing the belt halfway between the fan drive pulley and alternator pulley at specified force 98 N (10 kgf, 22 lbf).
2. If the measurement is not within the factory specifications, loosen the alternator mounting screws and relocate the alternator to adjust.

Deflection **(A)**	Factory spec.	7.0 to 9.0 mm 0.28 to 0.35 in.

(A) Deflection

9Y1210318GEG0001US0

Petitioner MWE Investments, LLC, et al.
Exhibit 1003, Page 895

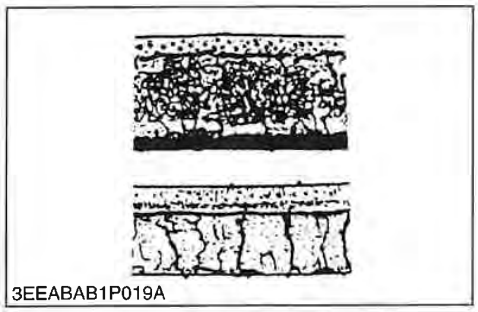
3EEABAB1P019A

Fan Belt Damage and Wear

1. Check the fan belt for damage.
2. If the fan belt is damaged, replace it.
3. Check if the fan belt is worn and sunk in the pulley groove.
4. If the fan belt is nearly worn out and deeply sunk in the pulley groove, replace it.

(A) Good **(B) Bad**

9Y1210318GEG0002US0

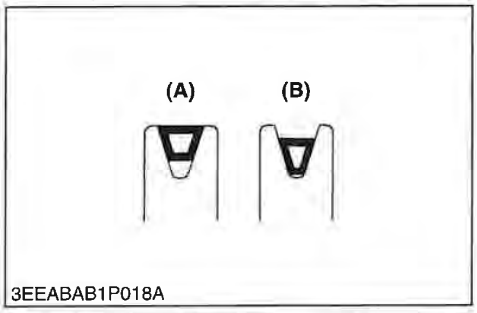

3EEABAB1P018A

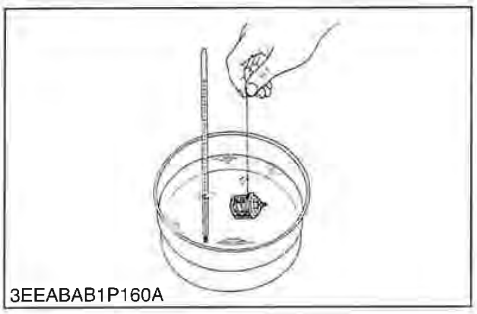
3EEABAB1P160A

Thermostat Valve Opening Temperature

1. Suspend the thermostat in the water by a string with its end inserted between the valve and seat.
2. Heating the water gradually, read the temperature when the valve opens and leaves the string.
3. Continue heating and read the temperature when the valve opens approx. 8 mm (0.3 in.).
4. If the measurement is not within the factory specifications, replace the thermostat.

Thermostat's valve opening temperature	Factory spec.	69.5 to 72.5 °C 157.1 to 162.5 °F
Temperature at which thermostat completely opens	Factory spec.	85 °C 185 °F

9Y1210318ENS0017US0

CAUTION

- **When removing the radiator cap, wait at least ten minutes after the engine has stopped and cooled down. Otherwise, hot water may gush out, scalding nearby people.**

9Y1210318ENS0018US0

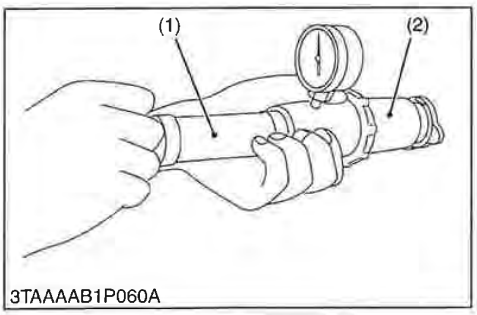

3TAAAAB1P060A

Radiator Cap Air Leakage

1. Set a radiator tester (1) and an adaptor (2) on the radiator cap.
2. Apply the specified pressure (90 kPa, 0.9 kgf/cm^2, 10 psi), and measure the time for the pressure to fall to 60 kPa (0.6 kgf/cm^2, 9 psi).
3. If the measurement is less than the factory specification, replace the radiator cap.

Pressure falling time	Factory spec.	More than 10 seconds for pressure fall from 90 to 60 kPa from 0.9 to 0.6 kgf/cm^2 from 10 to 9 psi

(1) Radiator Tester (2) Adaptor

9Y1210318ENS0019US0

Petitioner MWE Investments, LLC, et al.
Exhibit 1003, Page 896

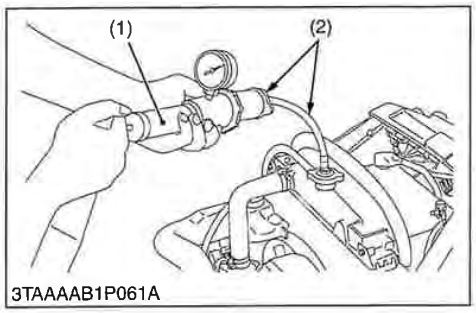

Radiator Water Leakage

1. Pour a specified amount of water into the radiator.
2. Set a radiator tester (1) and an adaptor (2) and raise the water pressure to the specified pressure.
3. Check the radiator for water leaks.
4. For water leak from the pinhole, repair with the radiator cement. When water leak is excessive, replace the radiator.

Radiator water leakage test pressure	Factory spec.	No leak at specified pressure

(1) Radiator Tester (2) Adaptor

9Y1210318ENS0020US0

(4) Fuel System

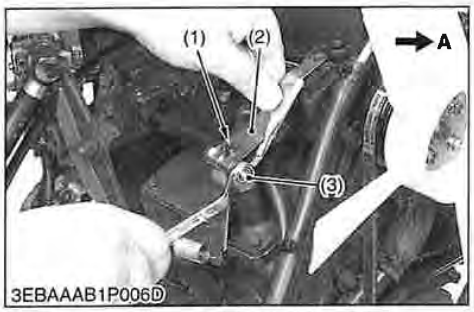

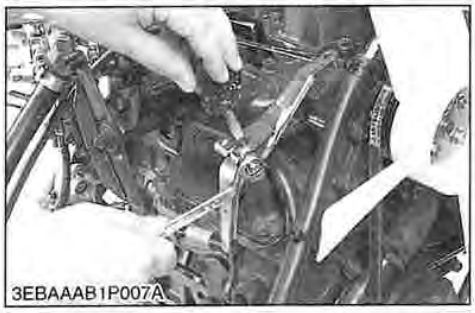

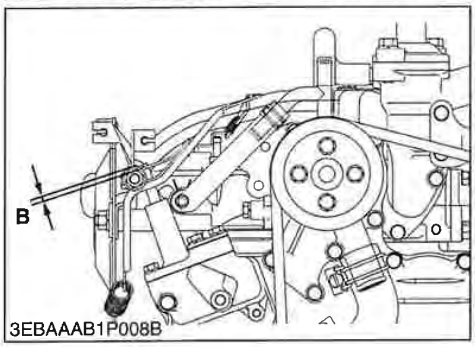

Adjusting Governor

1. Loosen the governor lever nut (3).
2. Set the throttle valve to the fully **"OPEN"** position with the governor lever (2), turn the groove on the governor lever shaft (1) fully clockwise with a screwdriver (to open the governor completely), and then tighten the nut (3) in this position.

Tightening torque	Governor lever nut	9.81 to 11.2 N·m 1.00 to 1.15 kgf·m 7.24 to 8.31 lbf·ft

■ **NOTE**

- **Insert the governor lever to the position 2 mm (0.08 in.) (B) away from the fork lever shaft end.**

(1) Governor Lever Shaft
(2) Governor Lever
(3) Governor Lever Nut

A : Open Direction
B : 2 mm (0.08 in.)

9Y1210318ENS0021US0

Petitioner MWE Investments, LLC, et al.
Exhibit 1003, Page 897

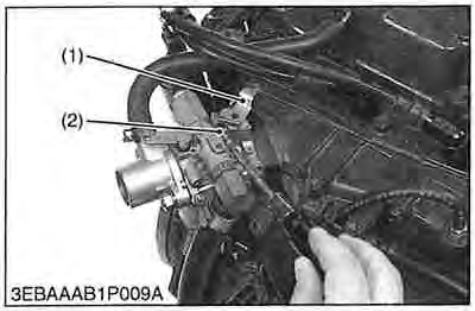

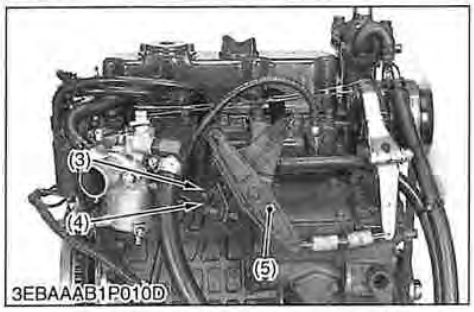

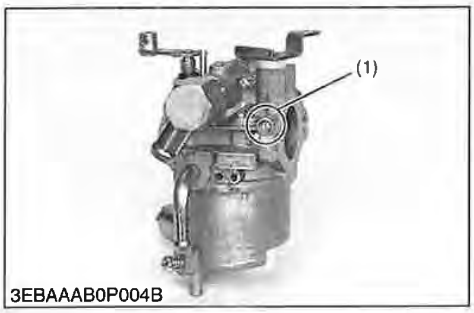

Adjusting Engine Speed

1. Warm up the engine at a medium speed for 10 to 15 minutes.
2. Engine speed is adjusted to approx. 1500 min^{-1} (rpm) by the speed control lever (5).
3. Throttle valve (1) is closed by hand and engine speed is adjusted with the throttle adjust screw (2) to 1200 min^{-1} (rpm) (1100 to 1300 min^{-1} (rpm)).
4. Adjust the low-idling speed adjust screw (3) until the engine speed reaches 1500 min^{-1} (rpm) (1400 to 1600 min^{-1} (rpm)) with the speed control lever (5) in the minimum speed position.
5. Adjust the high-idling speed adjust screw (4) until the engine speed reaches 3850 min^{-1} (rpm) (3850 to 3950 min^{-1} (rpm)) with the speed control lever (5) in the maximum speed position.

Lo-idling speed	Factory spec.	1500 min^{-1} (rpm) (1400 to 1600 min^{-1} (rpm))
Hi-idling speed	Factory spec.	3850 min^{-1} (rpm) (3850 to 3950 min^{-1} (rpm))

(1) Throttle Valve
(2) Throttle Adjust Screw
(3) Low-idling Adjust Screw
(4) High-idling Adjust Screw
(5) Speed Control Lever

9Y1210318ENS0022US0

Carburetor (WG972-E2) / Dual Fuel Carburetor (DF972-E2)

The carburetor is tamper resistant; the idle mixture screw has been covered by tamper plug after adjustment at the factory.

(1) Tamper Resistance

9Y1210318ENS0023US0

Petitioner MWE Investments, LLC, et al.
Exhibit 1003, Page 898

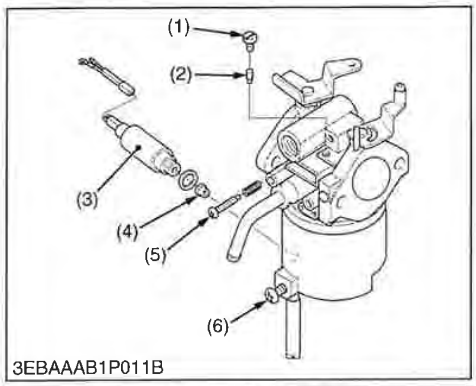

3EBAAAB1P011B

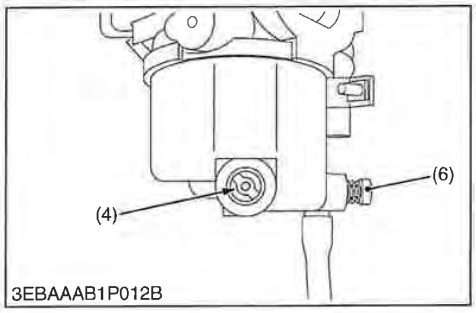

3EBAAAB1P012B

Replacement of Altitude Compensation Kit (Main Jet and Pilot Jet) (WG972-E2, DF972-E2)

1. Remove the carburetor.
2. Loosen the drain screw (6) to let fuel out.
3. Remove the gasoline solenoid (3).
4. Remove the main jet (4).
5. Install the high-altitude kit's main jet onto the carburetor.
6. Tighten the throttle adjust screw (5) and remove the pilot screw (1).
7. Replace the existing pilot jet (2) with the high-altitude kit's pilot jet.
8. Install the gasoline solenoid (3).
9. Install the carburetor in place.
10. Readjust the governor.
11. Adjust the engine speed.

■ **NOTE**

- **After install the carburetor, the adjustment of governor and engine speed are executed.**
- **Prepare a screwdriver that fits the main jet / pilot jet screws in order not to damage the main jet and pilot jet.**
- **Replace the air cleaner packing and the carburetor packing with new ones.**
- **Make sure there is no leak at the air cleaner packing and the carburetor packing.**

■ **IMPORTANT**

- **Keep the carburetor inner parts which is removed from standard carburetor.**

Tightening torque	Carburetor mounting nut	24 to 27 N·m 2.4 to 2.8 kgf·m 18 to 20 lbf·ft
	Gasoline solenoid	7.9 to 11 N·m 0.80 to 1.2 kgf·m 5.8 to 8.6 lbf·ft
	Main jet	0.98 to 2.8 N·m 0.10 to 0.29 kgf·m 0.73 to 2.0 lbf·ft
	Pilot jet	0.98 to 3.9 N·m 0.10 to 0.40 kgf·m 0.73 to 2.8 lbf·ft

(1) Pilot Screw
(2) Pilot Jet
(3) Gasoline Solenoid
(4) Main Jet
(5) Throttle Adjust Screw
(6) Drain Screw

9Y1210318ENS0024US0

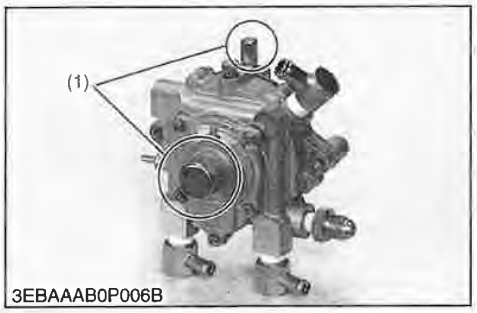

3EBAAAB0P006B

LPG Vaporizer Regulator (DF972-E2)

LPG vaporizer regulator is tamper resistant; the main and idle pressure adjustment screws have been covered by tamper caps after adjustment at the factory.

(1) Tamper Resistance

9Y1210318ENS0025US0

Petitioner MWE Investments, LLC, et al.
Exhibit 1003, Page 899

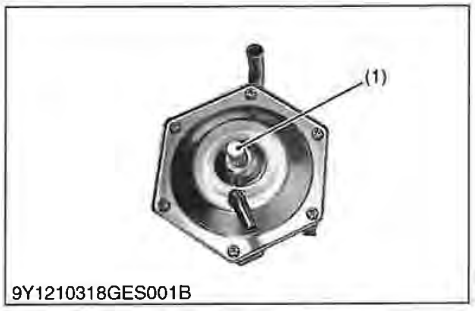

9Y1210318GES001B

Natural Gas Regulator (DG972-E2)

Natural gas regulator is tamper resistant; the pressure adjustment screw have been covered by tamper caps after adjustment at the factory.

(1) Tamper Resistance

9Y1210318ENS0026US0

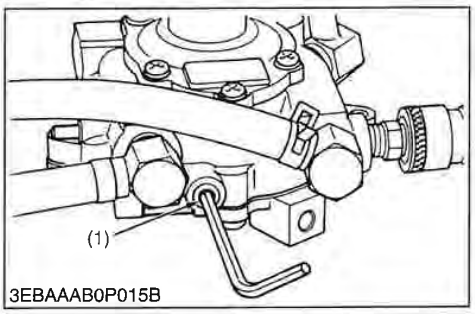

3EBAAAB0P015B

Vaporizer Joints (DF972-E2)

1. The direction of the joint for vapor hose is decided upon and a mark (2) is made.
2. The direction of the joint for coolant hose is decided upon and a mark is made.

■ **NOTE**

- **Vaporizer must be installed in an upright position (coolant hoses at bottom).**
- **The joints (fitting) can be adjusted to any position. The joint must be tight in that position.**
- **Apply an approved for GAS or LPG use liquid gasket (Three Bond 1104 or its equivalent) to thread (see figure) and tighten it.**
- **Drain plug (1) must not be obstructed ; so that it can be removed during maintenance.**
- **Apply liquid gasket to the thread of each joint and tighten them.**
- **After selecting the joint (fitting) positions, insure that there are no leaks.**

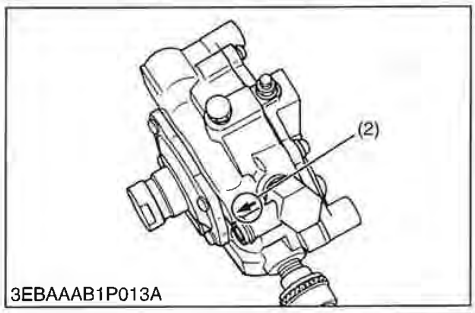

3EBAAAB1P013A

Tightening torque	Joint for LPG hose of vaporizer (local arrangement)	20 to 23 N·m 2.0 to 4.0 kgf·m 15 to 17 lbf·ft
	Joint for vapor hose of vaporizer	30 to 58 N·m 3.0 to 6.0 kgf·m 22 to 43 lbf·ft
	Joint for coolant hose of vaporizer	30 to 58 N·m 3.0 to 6.0 kgf·m 22 to 43 lbf·ft

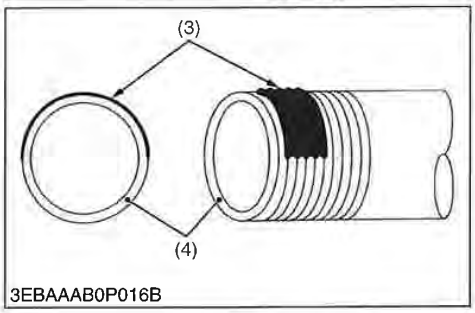

3EBAAAB0P016B

(1) Drain Plug
(2) Mark
(3) Liquid Gasket
(4) Thread of Joint

9Y1210318ENS0027US0

Petitioner MWE Investments, LLC, et al.
Exhibit 1003, Page 900

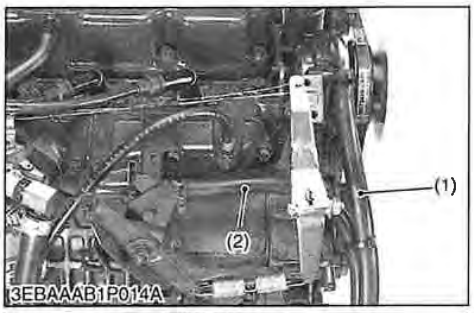

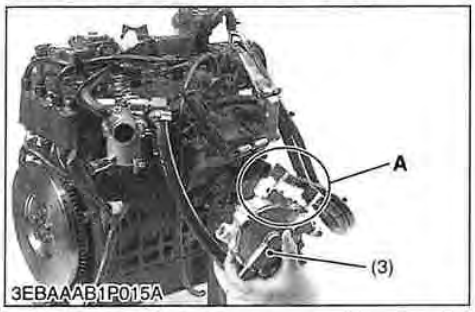

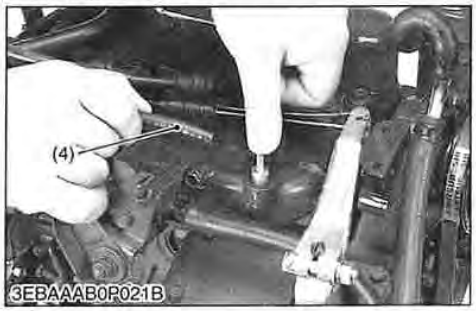

Vaporizer Piping (DF972-E2)

1. Connect the coolant hose (1) and (2) through the vaporizer.
2. The joint part of vaporizer is adjusted to the upper side (**A**) and coolant is replenished through radiator, to bleed air in the vaporizer.
3. Vaporizer (3) is returned to former position.
4. Connect the vapor hose.
5. Connect the vacuum lock hose (4).
6. Tighten the vaporizer (3).
7. Connect the LPG hose.

- O.D. of joint for vapor hose: 12.7 mm (0.500 in.)
- O.D. of joint for coolant hose: 9.0 mm (0.35 in.)

CAUTION

- **All fuel connections added to this engine must be installed by qualified personnel and utilizing recognized procedures and standards.**
- **These non-KUBOTA installed parts, such as hoses, fittings, piping, should be approved for LPG use and conform to UL, CSA, NFPA, and all other recognized standards.**
- **An approved, listed fuel filter and electromechanical positive shutoff must be installed between the LPG tank and KUBOTA vaporizer.**

NOTE

- **The LPG liquid in joint (fitting) to the vaporizer / regulator is not provided in the KIT by KUBOTA, due to the many different connection requirements by the OEM.**
  The female thread into the vaporizer / regulator is a PT 1/4 METRIC thread. To insure good sealing the correct fitting must by used.
- **Vapor hose between the vaporizer and mixer must be of 280 to 320 mm (11.1 to 12.5 in.) in length, to assure correct emissions and proper operation.**
- **Perform air bleeding of the vaporizer (water passage).**
- **Each hose must be tightened with a hose clamp.**

(1) Coolant Hose
(2) Coolant Hose
(3) Vaporizer
(4) Vacuum Lock Hose

A : Joint

9Y1210318ENS0028US0

(5) Ignition System

Timing Light Test

1. Set the timing light to High-tension cord.
2. Close the fuel cocks.
3. Cranking the engine.
4. If the timing light blinks, the spark plug and ignition coil are normal.
5. If the timing light does not blink, check the spark plug / ignition coil.

9Y1210318ENS0029US0

Petitioner MWE Investments, LLC, et al.
Exhibit 1003, Page 901

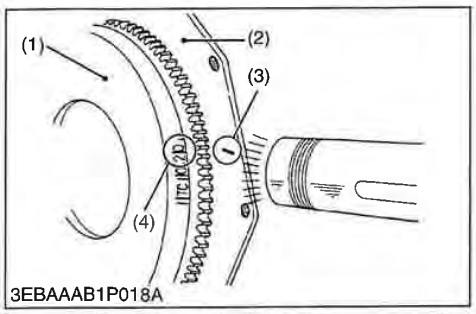

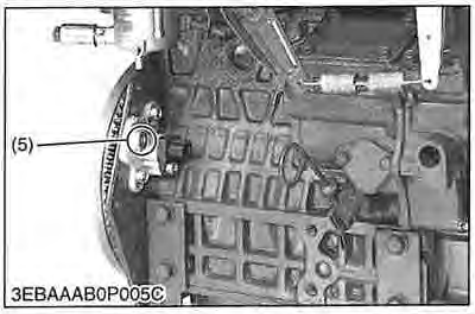

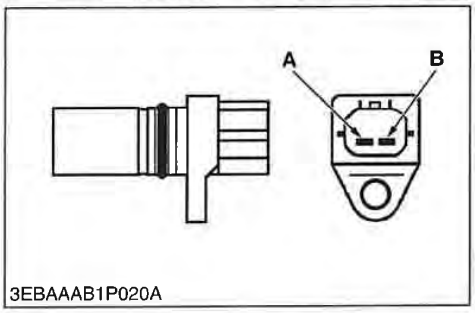

Ignition Timing

1. Using a timing light, check that the ignition timing (stamps on the flywheel) (4) is aligned with the mark (3) on the rear end plate (2).
2. The pick-up sensor is tamper resistant (5); the ignition timing adjustment screw has been covered after adjustment at the factory.

Ignition timing	Factory spec.	0.34 to 0.40 rad (19 to 23 °) before T.D.C at 3600 min-^{1} (rpm)

(1) Flywheel
(2) Rear End Plate
(3) Mark
(4) Ignition Timing
(5) Tamper Resistance

9Y1210318ENS0030US0

Resistance of Pick-Up Sensor

1. Disconnect the connector.
2. Measure the resistance with an ohmmeter.
3. If the resistance is not with in the factory specifications, replace it.

Resistance	Factory spec.	A - B	1.85 to 2.45 kΩ at 20 °C

■ **NOTE**

- **This check sheet shows the results of the test conducted by using the "Sanwa-made testers SP-10 / SP-150" (analog meter).**
- **Use of other testers than those above may show different measured results.**

9Y1210318ENS0031US0

Petitioner MWE Investments, LLC, et al.
Exhibit 1003, Page 902

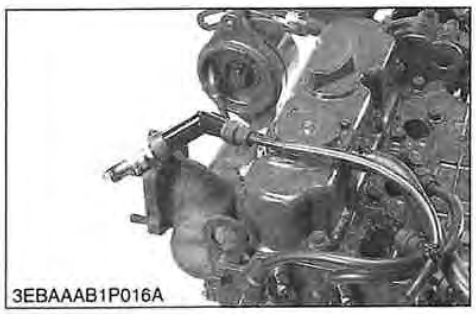
3EBAAAB1P016A

Spark Test

1. Remove the spark plug, put it inside the high voltage cord cap firmly, and then ground the threaded section to the engine body (not to painted or resin parts).
2. Rotate the starter with the key switch and check that the plug sparks.

CAUTION

- **This test is hazardous of electric shocks. Never use hand or screwdriver to press the plug to ground it to the engine body.**
- **Keep inflammable away from the engine.**

9Y1210318ENS0032US0

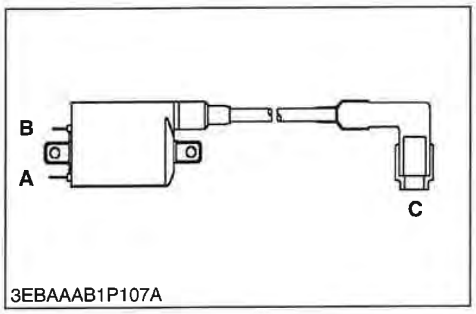

3EBAAAB1P107A

Resistance of Ignition Coil

1. Disconnect the connector.
2. Measure the resistance with an ohmmeter.
3. If the resistance is not with in the factory specifications, replace it.

Resistance	Factory spec.	A - B	1.87 to 2.53 Ω at 20 °C
		A - C	10.4 to 15.6 kΩ at 20 °C

NOTE

- **This check sheet shows the results of the test conducted by using the "FLUKE MULTMETER 110 SERIES" (digital meter).**
- **Use of other testers than those above may show different measured results.**

A : Terminal (+)
B : Terminal (−)
C : High Tension Cord

9Y1210318ENS0033US0

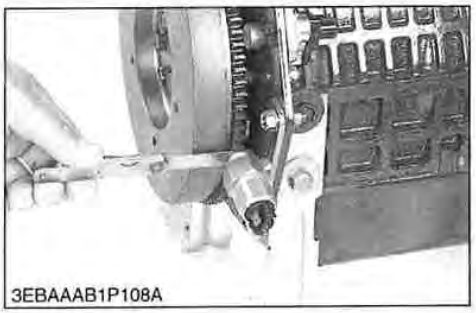
3EBAAAB1P108A

Air Gap of Engine Speed Sensor for Electronic Governor

1. Measure the air gap with a feeler gauge.
2. If air gap differs from the factory specification, readjust the air gap.

Air gap	Factory spec.	0.80 to 1.2 mm 0.032 to 0.047 in.

NOTE

- **The described numerical value is the values of KBT parts.**
- **Checking sensor as described in the manual of sensor maker.**
- **The described valve is the data of supply of kubota. Follow the instruction of OEM for parts adopted by OEM.**

9Y1210318ENS0034US0

Resistance of Engine Speed Sensor for Electronic Governor

1. Measure the resistance with an ohmmeter.
2. If the resistance is not with in the factory specifications, replace it.

Resistance	Factory spec.	Approx. 2.15 kΩ

NOTE

- **The described numerical value is the values of KBT parts.**
- **Checking sensor as described in the manual of sensor maker.**
- **This check sheet shows the results of the test conducted by using the "FLUKE MULTMETER 110 SERIES".**
- **The described valve is the data of supply of kubota. Follow the instruction of OEM for parts adopted by OEM.**

9Y1210318ENS0035US0

Petitioner MWE Investments, LLC, et al.
Exhibit 1003, Page 903

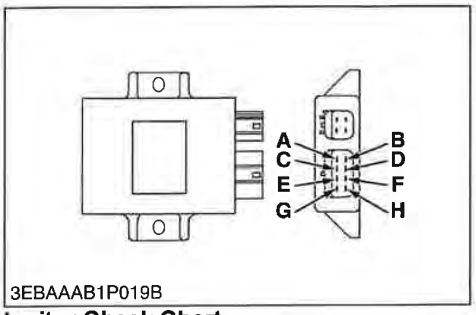

Resistance of Ignitor

1. Disconnect the connector.
2. Measure the resistance with an ohmmeter.
3. If the resistance is not with in the factory specifications, replace it.

9Y1210318ENS0036US0

Ignitor Check Chart

	Negative							
Positive	**A**	**B**	**C**	**D**	**E**	**F**	**G**	**H**
A	–	10 to 40 kΩ	10 to 40 kΩ	11 to 47 kΩ	Infinity	Infinity	Infinity	Infinity
B	10 to 40 kΩ	–	0.33 to 1.3 kΩ	1.8 to 7.3 kΩ	Infinity	Infinity	Infinity	Infinity
C	10 to 40 kΩ	0.33 to 1.3 kΩ	–	1.5 to 6.0 kΩ	Infinity	Infinity	Infinity	Infinity
D	11 to 47 kΩ	1.8 to 7.3 kΩ	1.5 to 6.0 kΩ	–	Infinity	Infinity	Infinity	Infinity
E	Infinity	Infinity	Infinity	Infinity	–	Infinity	Infinity	Infinity
F	2 megohm (minimum)	2 megohm (minimum)	2 megohm (minimum)	2 megohm (minimum)	Infinity	–	Infinity	Infinity
G	2 megohm (minimum)	2 megohm (minimum)	2 megohm (minimum)	2 megohm (minimum)	Infinity	Infinity	–	Infinity
H	2 megohm (minimum)	2 megohm (minimum)	2 megohm (minimum)	2 megohm (minimum)	Infinity	Infinity	Infinity	–

■ **NOTE**

- **This check sheet shows the results of the test conducted by using the "FLUKE MULTMETER 110 SERIES" (digital meter).**
- **Use of other testers than those above may show different measured results.**

9Y1210318ENS0037US0

Petitioner MWE Investments, LLC, et al.
Exhibit 1003, Page 904

(6) Electrical System

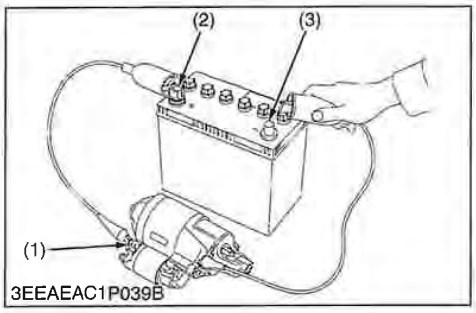

Motor Test

CAUTION

- **Secure the starter to prevent it from jumping up and down while testing the motor.**

1. Disconnect the battery negative cable from the battery.
2. Disconnect the battery positive cable from the battery.
3. Disconnect the leads from the starter **B** terminal.
4. Remove the starter from the engine.
5. Connect a jumper lead from the starter **C** terminal (1) to the battery positive terminal (2).
6. Connect a jumper lead momentarily between the starter's body and the battery negative terminal (3).
7. If the motor does not run, starter is failure.
   Repair or replace the starter.

NOTE

- **B terminal : It is the terminal which connects the cable from the battery to the starter.**
- **C terminal : It is the terminal which connects the cable from the motor to the magnet switch.**

(1) **C** Terminal
(2) Positive Terminal
(3) Negative Terminal

9Y1210318ENS0038US0

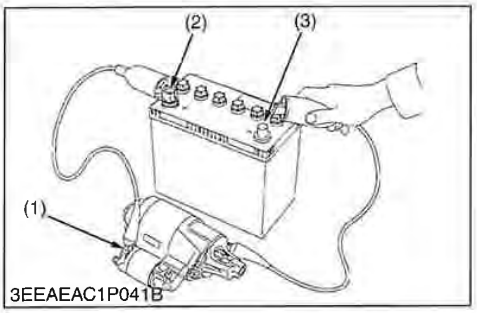

Magnetic Switch Test

1. Disconnect the battery negative cable from the battery.
2. Disconnect the battery positive cable from the battery.
3. Disconnect the leads from the starter **B** terminal.
4. Remove the starter from the engine.
5. Connect a jumper lead from the starter **S** terminal (1) to the battery positive terminal (2).
6. Connect a jumper lead momentarily between the starter's body and the battery negative terminal (3).
7. If the pinion gear does not pop out, the magnetic switch is failure. Repair or replace the starter.

NOTE

- **B terminal : It is the terminal which connects the cable from the battery to the starter.**
- **S terminal : It is the terminal which connects the cable from the starter switch to the magnet switch.**

(1) **S** Terminal
(2) Positive Terminal
(3) Negative Terminal

9Y1210318ENS0039US0

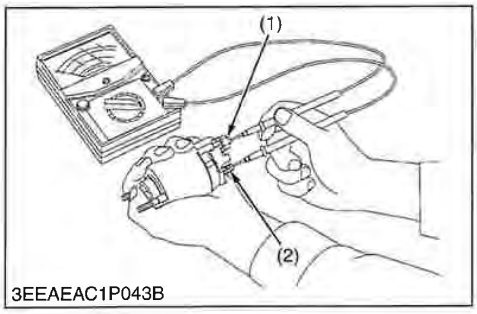

Magnet Switch Continuity Test

1. Check the continuity across the **C** terminal (1) and the **B** terminal (2) with a circuit tester, pushing in the plunger.
2. If not continuous or if a certain value is indicated, replace the magnet switch.

(1) **C** Terminal
(2) **B** Terminal

9Y1210318ENS0040US0

Petitioner MWE Investments, LLC, et al.
Exhibit 1003, Page 905

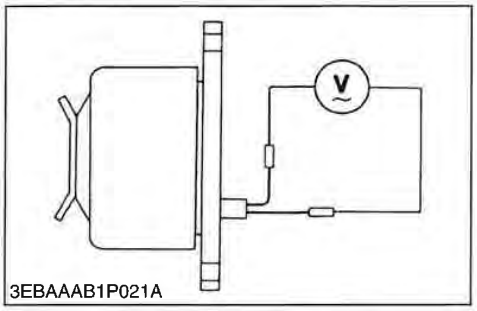

3EBAAAB1P021A

No-load Dynamo Output

1. Disconnect the lead wires from the dynamo.
2. Start the engine and operate the dynamo at the specified speed.
3. Measure the output voltage with a volt meter.
   If the measurement is not within the specified values, replace the dynamo.

No-load output voltage	Factory spec.	AC 20 V or more at 5200 min^{-1} (rpm)

9Y1210318ENS0041US0

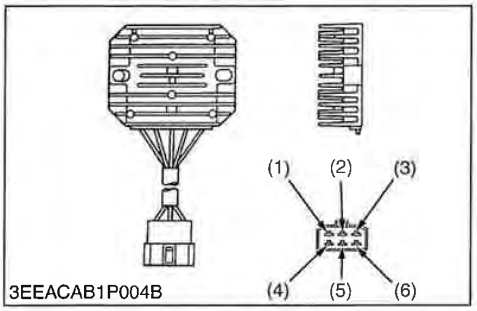

3EEACAB1P004B

Regulator

1. The engine is started.
2. Measure the output voltage of the regulator with the voltmeter.

Output voltage	(6) - (2)	14 V to 15 V

3. When the measurement is not the above table value, measure the input voltage of the regulator with the voltmeter.

Input voltage	(1) - (3)	Dynamo output voltage

4. When the measurement is the above table value, the regulator is failure. Exchange it.

■ **NOTE**
- **When the input voltage of the regulator is out of specification, check the generator.**

(1) Terminal (Sky Blue)
(2) Terminal (Black)
(3) Terminal (Sky Blue)
(4) Terminal (Green)
(5) Terminal (Yellow)
(6) Terminal (Red)

9Y1210318ENS0042US0

3TMACAD9P012A

Alternator on Unit Test

(Before testing)
- Before alternator on unit test, check the battery terminal connections, circuit connection, fan belt tension, charging indicator lamp, fuses on the circuit, and abnormal noise from the alternator.
- Prepare full charged battery for the test.

■ **NOTE**
- **Be careful not to touch the rotating engine parts while engine is running.**
  Keep safety distance from the engine rotating parts.

1. Start the engine.
2. When the engine is operating measure the voltage between two battery terminals. If the voltage is between 13.8 V and 14.8 V, the alternator is operating normally.
3. If the results of alternator on unit test are not within the specifications, disassemble the alternator and check the each component part for finding out the failure. See the "DISASSEMBLING AND ASSEMBLING" and "SERVICING" for alternator.

Regulating voltage at no load	Factory spec.	13.8 to 14.8 V at 25 °C (77 °F)

9Y1210318ENS0043US0

Petitioner MWE Investments, LLC, et al.
Exhibit 1003, Page 906

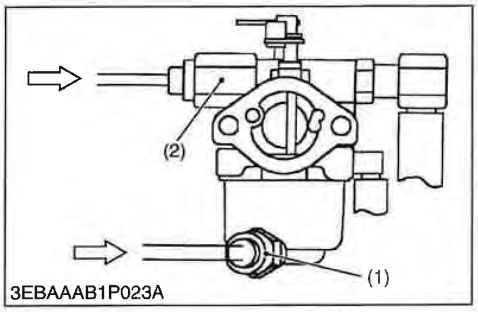

Fuel Cut Off Solenoid

1. Disconnect the connector.
2. Measure the resistance with an ohmmeter between the connector terminals.
3. If the factory specification is not indicated the solenoid is faulty.

WG972-E2, DF972-E2 : for Gasoline	Factory spec.	Approx. 38 Ω at 20 °C
DF972-E2 : for LPG	Factory spec.	Approx. 28 Ω at 20 °C

(1) Fuel Cut off Solenoid for Gasoline (2) Fuel Cut off Solenoid for LPG

9Y1210318ENS0044US0

(7) Electronic Governor

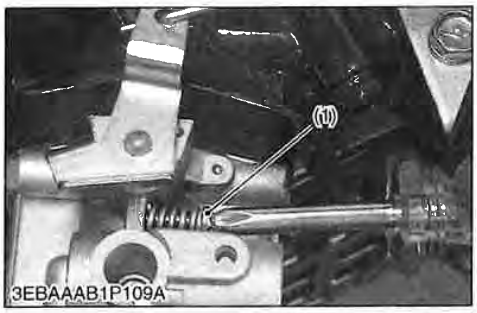

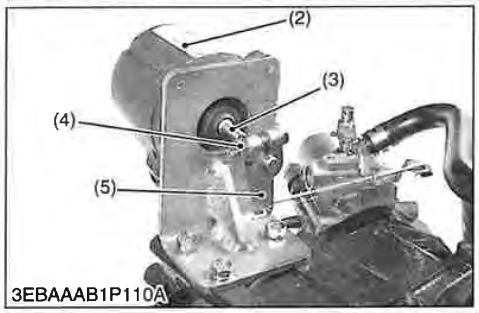

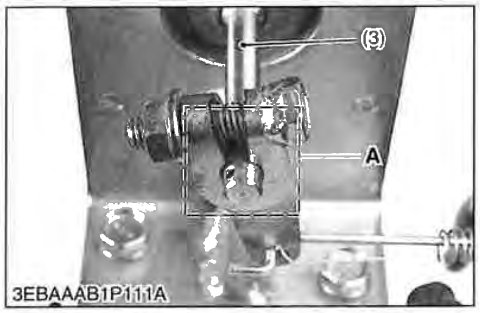

Adjust Governor Lever

1. Loosen the idling speed screw (1).
2. Loosen the governor lever nut (4).
3. Turn the actuator shaft (3) fully counterclockwise.
4. Turn the governor lever (5) fully counterclockwise.
5. Tighten the governor lever nut (4) to the torque value.

Tightening torque	Governor lever nut	9.81 to 11.2 N·m 1.00 to 1.15 kgf·m 7.24 to 8.31 lbf·ft

■ **NOTE**

- **Align governor lever (5) with pin hole of actuator shaft (A) and tighten nut (4).**
- **When starter switch turned on, the actuator will be in position control at the configured minimum position.**

(1) Idle Adjust Screw
(2) Actuator
(3) Actuator Shaft
(4) Governor Lever Nut
(5) Governor Lever
A : Setting Position

9Y1210318ENS0045US0

Petitioner MWE Investments, LLC, et al.
Exhibit 1003, Page 907

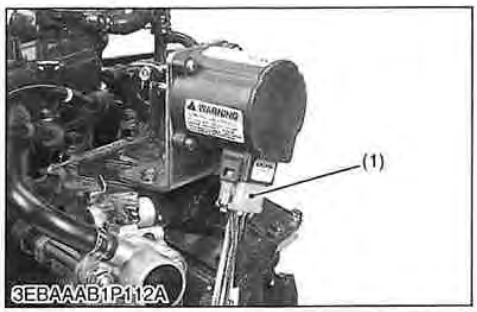

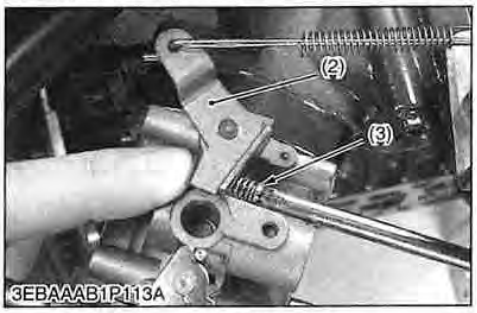

Adjust Throttle Lever

CAUTION
- **Do not overrunning the engine because the electronic governor does not operate.**
- **The adjustment of the idle speed due to this process is not an adjustment of the final product.**

1. Disconnect actuator connector (1).
2. Start the engine while holding the throttle lever (2) at the idle position by finger.
3. Adjust the engine speed with the idle adjust screw (3) to 1200 min^{-1} (rpm).

NOTE
- **An electronic governor controls the engine speed between 1500 min^{-1} (rpm) and 3600 min^{-1} (rpm) though it depends on the applications.**

(1) Actuator Connector
(2) Throttle Lever
(3) Idle Adjust Screw

9Y1210318ENS0046US0

[2] DISASSEMBLING AND ASSEMBLING

IMPORTANT
- **When reassembling, replace all of the O-rings and gaskets by new ones.**
- **When disassembling the LPG engine after completely consuming the fuel in piping.**

9Y1210318ENS0047US0

(1) Draining Coolant and Engine Oil

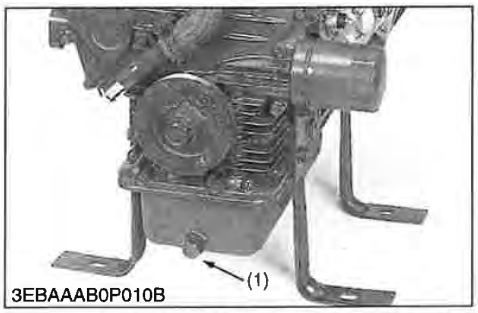

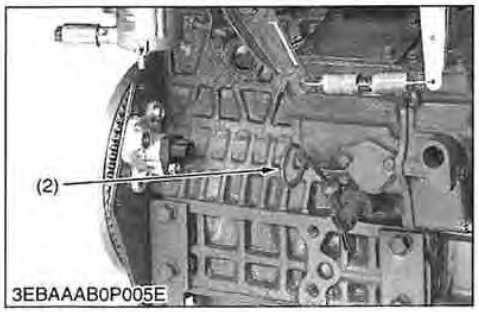

Draining Engine Oil

1. Start and warm up the engine for approx. 5 minutes.
2. Place an oil pan underneath the engine.
3. Remove the drain plug (1) to drain oil.
4. After draining, screw in the drain plug.

(When refilling)
- Fill the engine oil up to the upper line on the dipstick (2).

IMPORTANT
- **When using an oil of different maker or viscosity from the previous one, remove all of the old oil.**
- **Never mix two different types of oil.**
- **Engine oil should have properties of API classification SH.**
- **Use the proper SAE Engine Oil according to ambient temperature.**

Above 25 °C (77 °F)	SAE30 or SAE10W-30
0 °C to 25 °C (32 °F to 77 °F)	SAE20 or SAE10W-30
Below 0 °C (32 °F)	SAE10W or SAE10W-30

Engine oil capacity	3.4 L 0.90 U.S.gals

Tightening torque	Drain plug	33 to 37 N·m 3.3 to 3.8 kgf·m 24 to 27 lbf·ft

(1) Drain Plug
(2) Dipstick

9Y1210318ENS0048US0

Petitioner MWE Investments, LLC, et al.
Exhibit 1003, Page 908

Draining Coolant

CAUTION

- **Never remove radiator cap while operating or immediately after stopping. Otherwise, hot water will spout out from the radiator. Wait for more than ten minutes to cool the radiator, before opening the cap.**

1. Prepare a bucket. Open the coolant drain cock.

(1) Coolant Drain Cock

9Y1210318ENS0049US0

(2) External Components

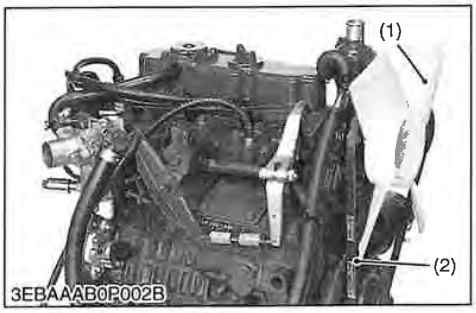

Alternator, Starter and Others

1. Remove the air cleaner and muffler.
2. Remove the cooling fan (1), fan pulley and fan belt (2).
3. Remove the alternator.
4. Remove the starter.

(When reassembling)

- Check to see that there are no cracks on the belt surface.

IMPORTANT

- **After reassembling the fan belt, be sure to adjust the fan belt tension.**
- **Do not confuse the direction of the fan.**

(1) Cooling Fan (2) Fan Belt

9Y1210318ENS0050US0

Fuel Line (WG972-E2)

1. Disconnect the gasoline hose from the connector (1).

(1) Gasoline Hose Connector

9Y1210318ENS0051US0

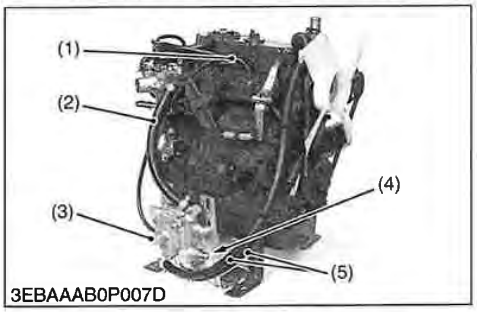

LPG Hose and Coolant Hose (DF972-E2)

CAUTION

- **Vent the air of the water passage of vaporizer (3) after detaching the coolant hose (5).**

1. Disconnect the LPG hose from the connector (4).
2. Disconnect the coolant hose (5).
3. Disconnect the vapor hose (2) and vacuum lock hose (1).
4. Remove the vaporizer (3) (if necessary).

IMPORTANT

- **When disassembling the fuel system, make sure that the fuel valve is closed.**

(When reassembling)

- Bleed the vaporizer after supplying coolant.

(1) Vacuum Lock Hose
(2) Vapor Hose
(3) Vaporizer
(4) LPG Hose Connector
(5) Coolant Hose

9Y1210318ENS0052US0

Petitioner MWE Investments, LLC, et al.
Exhibit 1003, Page 909

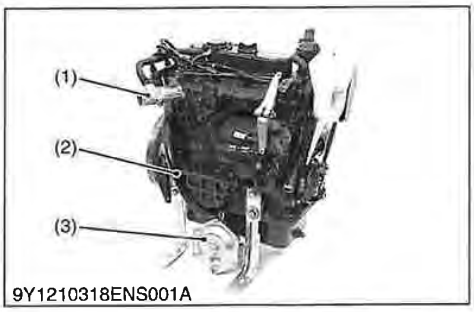

Gas Hose (DG972-E2)

1. Disconnect the gas hose from the connector.
2. Disconnect the gas hose (2) between the regulator (3) and gas mixer (1).
3. Remove the regulator (3) (if necessary).

■ **IMPORTANT**

- **When disassembling the fuel system, make sure that the fuel valve closed.**

(1) Gas Mixer
(2) Gas Hose
(3) Regulator

9Y1210318ENS0053US0

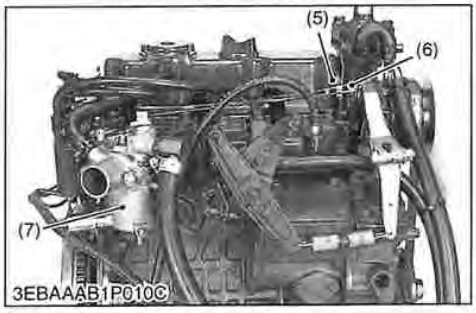

Carburetor (Mechanical Governor) (WG972-E2, DF972-E2)

1. Disconnect the connector of LPG solenoid (for DF972) (4) and the connector of gasoline solenoid (3).
2. Disconnect the breather hose (1).
3. Remove the air cleaner flange (2) and air cleaner gasket.
4. Disconnect the governor rod (6) from the carburetor (7) and remove the carburetor (7).
5. Remove the carburetor flange and gasket.

■ **NOTE**

- **Do not bend the governor rod (6), when disassembling and assembling the carburetor (7).**
- **Do not stretch the governor rod spring (5) when disassembling and assembling the carburetor (7).**

Tightening torque	Carburetor mounting nut	24 to 27 N·m 2.4 to 2.8 kgf·m 18 to 20 lbf·ft

(1) Breather Hose
(2) Air Cleaner Flange
(3) Gasoline Solenoid Connector
(4) LPG Solenoid Connector
(5) Governor Rod spring
(6) Governor Rod
(7) Carburetor

9Y1210318ENS0054US0

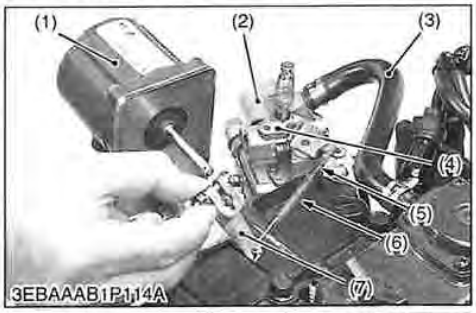

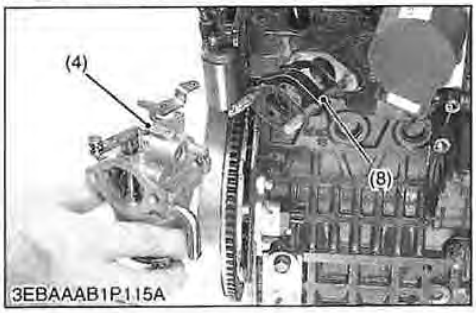

Governor Lever and Carburetor (Electronic Governor) (WG972-E2, DF972-E2)

1. Disconnect the connector of LPG solenoid (for DF972) and the connector of gasoline solenoid.
2. Loosen the governor lever nut.
3. Remove the governor lever (7) with governor rod (5) and governor rod spring (6).
4. Disconnect the breather hose (3).
5. Remove the air cleaner flange (2) and air cleaner gasket.
6. Remove the carburetor (4).
7. Remove the carburetor flange (8) and gasket.

■ **NOTE**

- **Do not bend the governor rod (5), when disassembling and assembling the carburetor (4).**
- **Do not stretch the governor rod spring (6) when disassembling and assembling the carburetor (4).**

Tightening torque	Carburetor mounting nut	24 to 27 N·m 2.4 to 2.8 kgf·m 18 to 20 lbf·ft

(1) Actuator
(2) Air Cleaner Flange
(3) Breather Hose
(4) Carburetor
(5) Governor Rod
(6) Governor Rod Spring
(7) Governor Lever
(8) Carburetor Flange

9Y1210318ENS0055US0

Petitioner MWE Investments, LLC, et al.
Exhibit 1003, Page 910

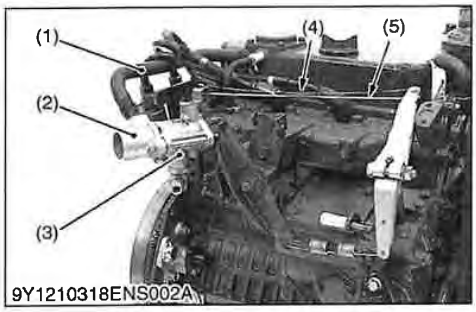

Gas Mixer (DG972-E2)

1. Disconnect the breather hose (1).
2. Remove the air cleaner flange (2) and air cleaner gasket.
3. Disconnect the governor rod (5) and governor rod spring (4) from the gas mixer (3).
4. Remove the gas mixer (3).
5. Remove the carburetor flange and gasket.

■ **NOTE**

- **Do not bend the governor rod (5), when disassembling and assembling the gas mixer (3).**
- **Do not stretch the governor rod spring (4) when disassembling and assembling the gas mixer (3).**

Tightening torque	Gas mixer mounting nut	24 to 27 N·m 2.4 to 2.8 kgf·m 18 to 20 lbf·ft

(1) Breather Hose
(2) Air Cleaner Flange
(3) Gas Mixer
(4) Governor Rod Spring
(5) Governor Rod

9Y1210318ENS0056US0

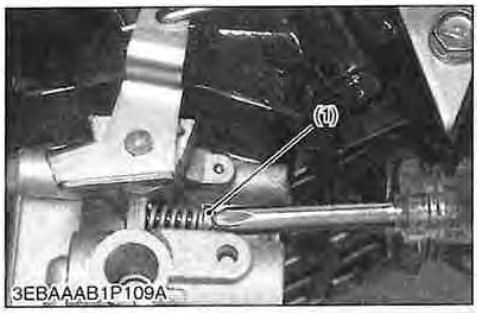

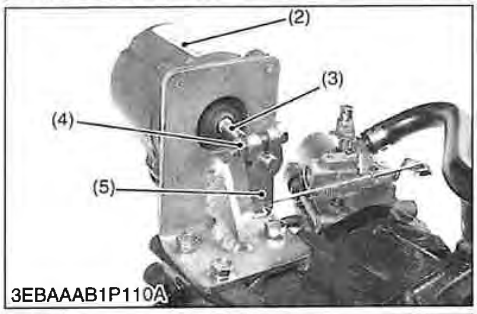

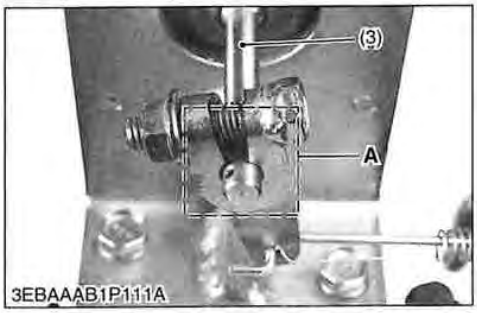

Adjust Governor Lever (Electronic Governor) (WG972-E2, DF972-E2)

1. Loosen the idling speed screw (1).
2. Loosen the governor lever nut (4).
3. Turn the actuator shaft (3) fully counterclockwise.
4. Turn the governor lever (5) fully counterclockwise.
5. Tighten the governor lever nut (4) to the torque value.

Tightening torque	Governor lever nut	9.81 to 11.2 N·m 1.00 to 1.15 kgf·m 7.24 to 8.31 lbf·ft

■ **NOTE**

- **Align governor lever (5) with pin hole of actuator shaft (A) and tighten nut (4).**
- **When starter switch turned on, the actuator will be in position control at the configured minimum position.**

(1) Idle Adjust Screw
(2) Actuator
(3) Actuator Shaft
(4) Governor Lever Nut
(5) Governor Lever
A : Setting Position

9Y1210318ENS0057US0

Petitioner MWE Investments, LLC, et al.
Exhibit 1003, Page 911

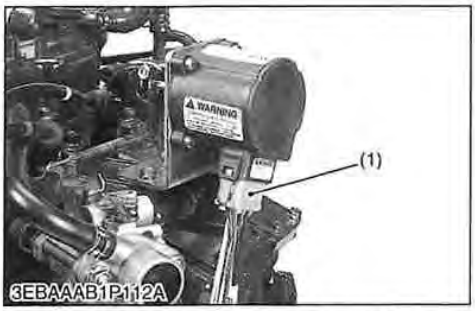

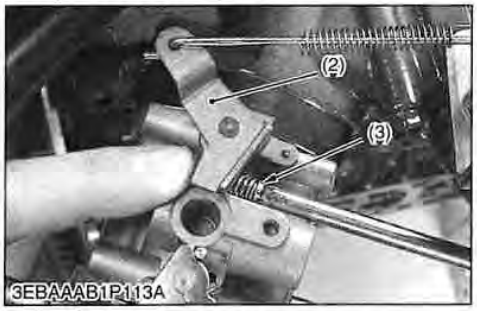

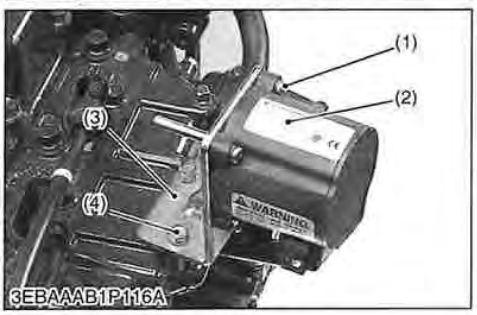

Adjust Throttle Lever (Electronic Governor) (WG972-E2, DF972-E2)

CAUTION

- **Hold the throttle lever (2) by finger in the direction of the engine speed reduction so as not to overrun.**
- **The adjustment of the idle speed due to this process is not an adjustment of the final product.**

1. Disconnect the connector (1) from actuator.
2. Start the engine while holding the throttle lever (2) at the idle position by hand.
3. Adjust the engine speed with the idle adjust screw (3) to 1200 min^{-1} (rpm).

NOTE

- **An electronic governor controls the engine speed between 1500 min^{-1} (rpm) and 3600 min^{-1} (rpm) through it depends on the applications.**

(1) Connector
(2) Throttle Lever
(3) Idle Adjust Screw

9Y1210318ENS0058US0

Actuator (Electronic Governor) (WG972-E2, DF972-E2)

1. Remove the actuator mounting screw (1).
2. Remove the actuator (2).
3. Remove the actuator flange screw (4).
4. Remove the actuator flange (3).

Tightening torque	Actuator mounting screw	4.5 to 5.3 N·m 0.45 to 0.55 kgf·m 3.3 to 3.9 lbf·ft
	Actuator flange screw	9.81 to 11.2 N·m 1.00 to 1.15 kgf·m 7.24 to 8.31 lbf·ft

CAUTION

- **All electronic equipment is static-sensitive, some components more than others.**
- **To protect these components from static damage, you must take special precautions to minimize or eliminate electrostatic discharges.**

(1) Actuator Mounting Screw
(2) Actuator
(3) Actuator Flange
(4) Actuator Flange Screw

9Y1210318ENS0059US0

Petitioner MWE Investments, LLC, et al.
Exhibit 1003, Page 912

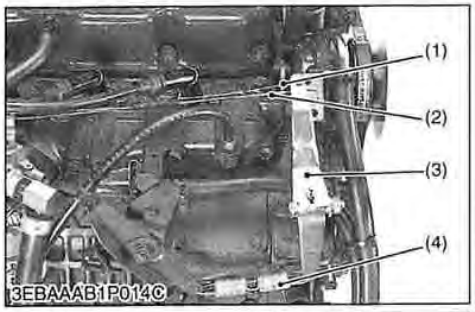

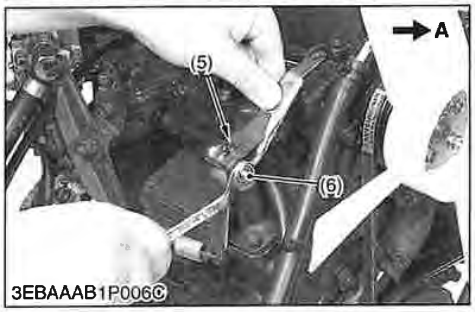

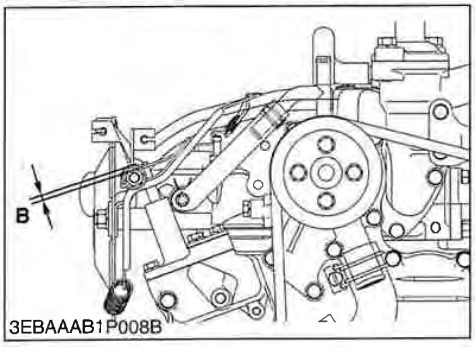

Governor Lever

1. Disconnect the governor rod (2) and rod spring (1) from governor lever (3).
2. Disconnect the governor spring (4) from governor lever.
3. Loosen the governor lever nut (6).
4. Remove the governor lever (3) from governor lever shaft (5).

(When reassembling)

- Loosen the governor lever nut (6).
- Set the throttle valve to the fully **"OPEN"** position with the governor lever (3), turn the groove on the governor lever shaft (5) fully clockwise with a screwdriver (to open the governor completely), and then tighten the nut (6) in this position.

Tightening torque	Governor lever nut	9.81 to 11.2 N·m 1.00 to 1.15 kgf·m 7.24 to 8.31 lbf·ft

■ **IMPORTANT**

- **After assembly of engine is completed, the adjustment of governor is executed.**
- **Insert the governor lever to the position 2 mm (0.08 in.) (B) away from the governor lever shaft end.**

(1) Governor Rod Spring
(2) Governor Rod
(3) Governor Lever
(4) Governor Spring
(5) Governor Lever Shaft
(6) Governor Lever Nut

A : Open Direction
B : 2 mm (0.08 in.)

9Y1210318ENS0060US0

Petitioner MWE Investments, LLC, et al.
Exhibit 1003, Page 913

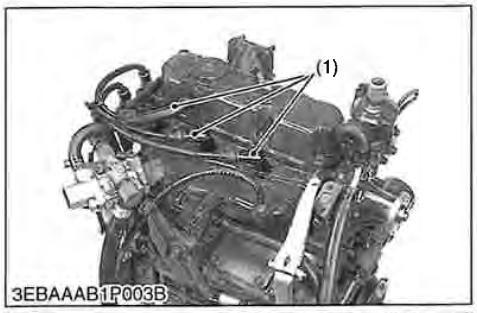

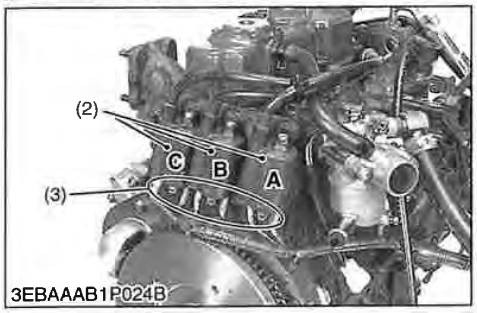

Ignition Coil and Spark Plug

1. Disconnect the plug cap (1).
2. Disconnect the connector of ignition coil (3).
3. Remove the ignition coil (2).
   A : for No. 1 cylinder
   B : for No. 2 cylinder
   C : for No. 3 cylinder
4. Remove the spark plug (4).

(1) Plug Cap
(2) Ignition Coil
(3) Ignition Coil Connector
(4) Spark Plug

9Y1210318ENS0061US0

(3) Cylinder Head, Valves and Oil Pan

Cylinder Head Cover

1. Remove the head cover screws (1).
2. Remove the cylinder head cover (2).
3. Remove the intake manifold (3).

(When reassembling)

- Check to see if the cylinder head cover gasket is not defective.

Tightening torque	Cylinder head cover screw	9.81 to 11.2 N·m 1.00 to 1.15 kgf·m 7.24 to 8.31 lbf·ft

(1) Head Cover Screws
(2) Cylinder Head Cover
(3) Intake Manifold

9Y1210318ENS0062US0

Petitioner MWE Investments, LLC, et al.
Exhibit 1003, Page 914

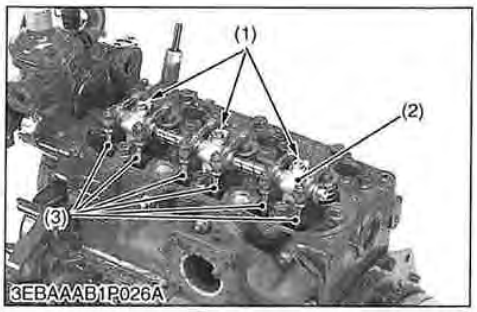

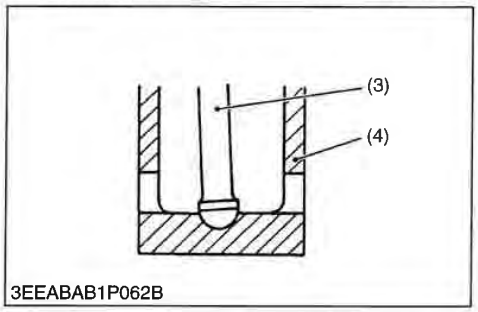

Rocker Arm and Push Rod

1. Remove the rocker arm bracket screws (1).
2. Detach the rocker arm assembly (2).
3. Remove the push rods (3).

(When reassembling)

- When putting the push rods (3) onto the tappets (4), check to see if their ends are properly engaged with the dimples.

■ **IMPORTANT**

- **After installing the rocker arm, be sure to adjust the valve clearance.**

Tightening torque	Rocker arm bracket screw	12 to 14 N·m 1.2 to 1.5 kgf·m 8.7 to 10 lbf·ft

(1) Rocker Arm Bracket Screws
(2) Rocker Arm Assembly
(3) Push Rod
(4) Tappet

9Y1210318ENS0063US0

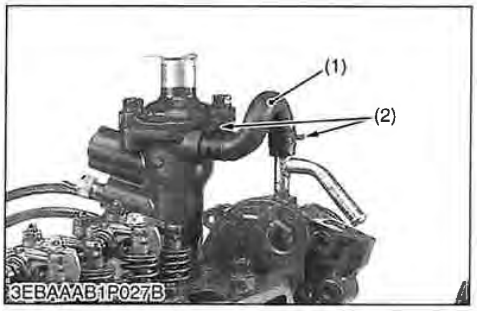

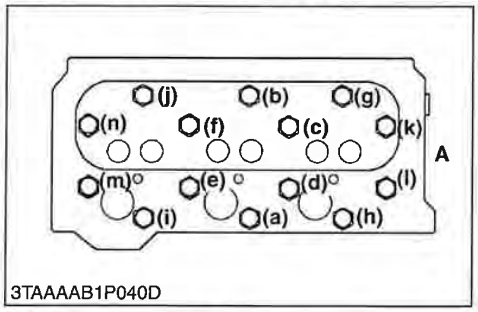

Cylinder Head

1. Loosen the pipe clamps (2), and remove the water return hose (1).
2. Remove the cylinder head screw in the order of (**n**) to (**a**).
3. Lift up the cylinder head to detach.
4. Remove the cylinder head gasket.

(When reassembling)

- Replace the cylinder head gasket with a new one.
- Tighten the cylinder head screws after applying sufficient oil.
- Tighten the cylinder head screws in order of (**a**) to (**n**).
- Tighten them uniformly, or the head may deform in the long run.

Tightening torque	Cylinder head screw	40 to 44 N·m 4.0 to 4.5 kgf·m 29 to 32 lbf·ft

(1) Water Return Hose
(2) Hose Clamp

A : Gear Case Side
(n) to (a) : To Loosen
(a) to (n) : To Tighten

9Y1210318ENS0064US0

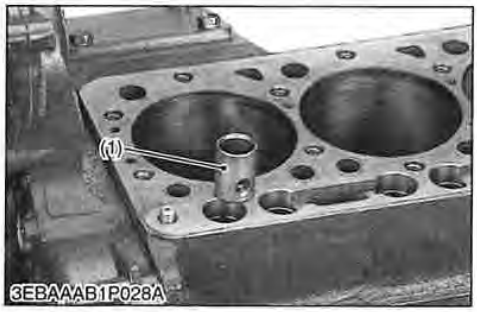

Tappets

1. Remove the tappets (1) from the crankcase.

(When reassembling)

- Visually check the contact between tappets and cams for proper rotation. If defect is found, replace tappets.
- Before installing the tappets, apply engine oil thinly around them.

■ **IMPORTANT**

- **Do not change the combination of tappet and tappet guide.**

(1) Tappet

9Y1210318ENS0065US0

Petitioner MWE Investments, LLC, et al.
Exhibit 1003, Page 915

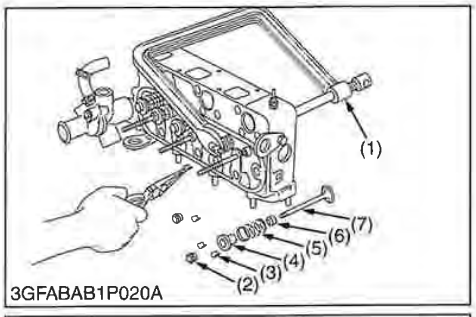

3GFABAB1P020A

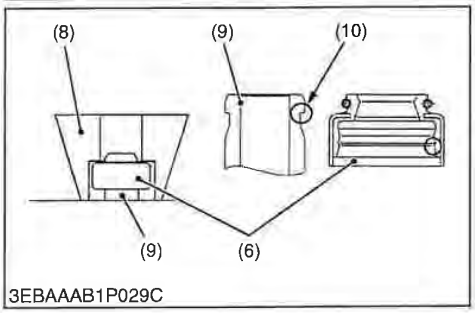

3EBAAAB1P029C

Valves

1. Remove the valve caps (2).
2. Remove the valve spring collet (3), pushing the valve spring retainer (4) with valve spring replacer (1).
3. Remove the valve spring retainer (4), valve spring (5) and valve stem seal (6).
4. Remove the valve (7).

(When reassembling)

- Wash the valve stem and valve guide hole, and apply engine oil sufficiently.
- After installing the valve spring collets, lightly tap the stem to assure proper fit with a plastic hammer.
- Install a new stem seal on the valve guide (9) vertically with a jig (8) when insert the stem seal (6). (See page G-29: "Valve Stem Seal Replacing Tool".)

■ **IMPORTANT**

- **Be sure stem seal (6) seats firmly against groove (10) on valve guide.**
- **Use care to prevent damage to lip of stem seal and valve stem when detach the valve spring collet by compressing the valve spring.**
- **Do not change the combination of valve and valve guide.**

(1) Valve Spring Replacer
(2) Valve Cap
(3) Valve Spring Collet
(4) Valve Spring Retainer
(5) Valve Spring
(6) Valve Stem Seal
(7) Valve
(8) Jig
(9) Valve Guide
(10) Groove of Valve Guide

9Y1210318ENS0066US0

Petitioner MWE Investments, LLC, et al.
Exhibit 1003, Page 916

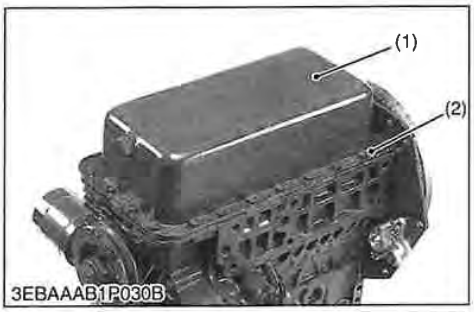

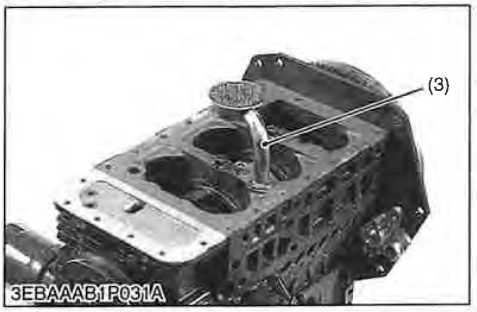

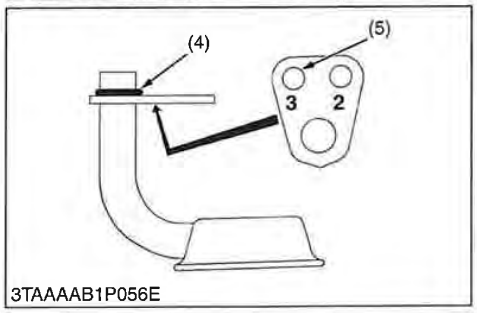

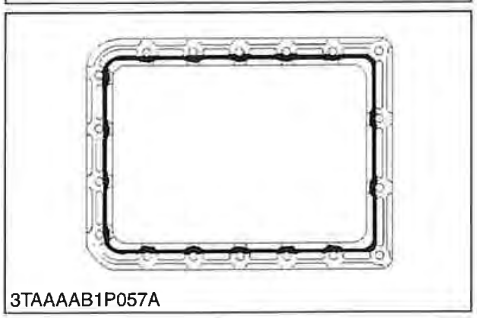

Oil Pan and Oil Strainer

1. Remove the oil pan mounting screws (2).
2. Remove the oil pan (1) by lightly tapping the rim of the pan with a wooden hammer.
3. Remove the oil strainer (3).

(When reassembling)

- After cleaning the oil strainer, check to see that the filter mesh in clean, and install it.
- Visually check the O-ring (4), apply engine oil, and install it.
- Securely fit the O-ring to the oil strainer.
- To avoid uneven tightening, tighten oil pan mounting screws in diagonal order form the center.
- Using the hole (5) numbered **"3"**, install the oil strainer by mounting screw.

■ **IMPORTANT**

- **Scrape off the old adhesive completely. Wipe the sealing surface clean. Now apply new adhesive 3.0 to 5.0 mm (0.12 to 0.19 in.) thick all over the contact surface. Apply the adhesive also on the center of the flange as well as on the inner wall of each bolt hole.**
- **Cut the nozzle of the "liquid gasket" (Three Bond 1207D or equivalent) container at its second notch. Apply "liquid gasket" about 5.0 mm (0.19 in.) thick.**
  Within 20 minutes after the application of fluid sealant, reassemble the components. Wait then for about 30 minutes, and pour oil in the crankcase.

(1) Oil Pan
(2) Oil Pan Mounting Screw
(3) Oil Strainer
(4) O-ring
(5) Hole Numbered **"3"**

9Y1210318ENS0067US0

(4) Thermostat

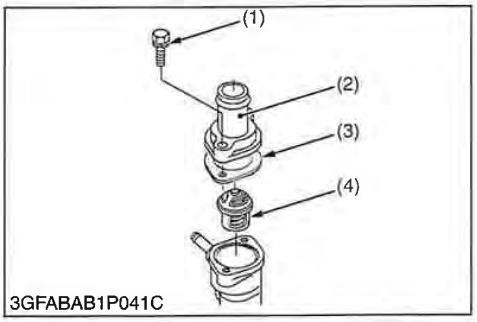

Thermostat Assembly

1. Remove the thermostat cover mounting screws (1), and remove the thermostat cover (2).
2. Remove the thermostat assembly (4).

(When reassembling)

- Apply a liquid gasket (Three Bond 1215 or equivalent) only at the thermostat cover side of the gasket (3).

(1) Thermostat Cover Mounting Screw
(2) Thermostat Cover
(3) Thermostat Cover Gasket
(4) Thermostat Assembly

9Y1210318ENS0068US0

Petitioner MWE Investments, LLC, et al.
Exhibit 1003, Page 917

(5) Timing Gear, Camshaft and Fuel Camshaft

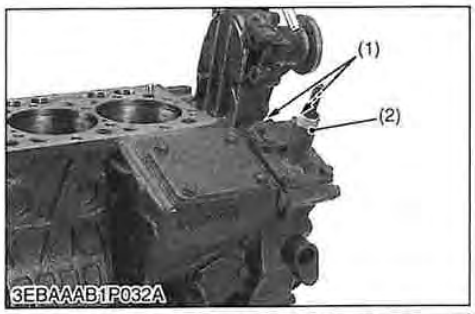

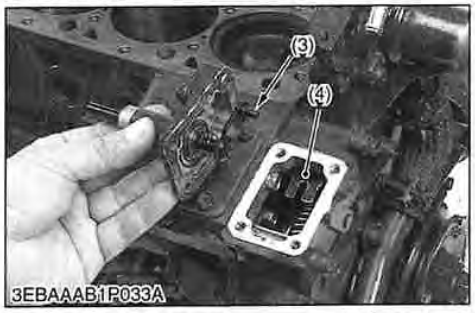

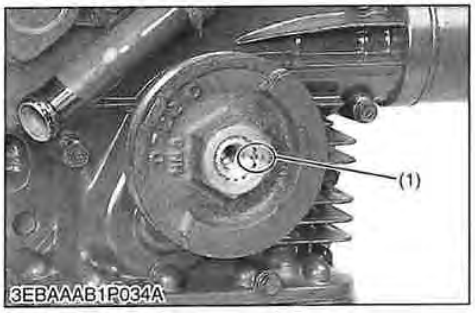

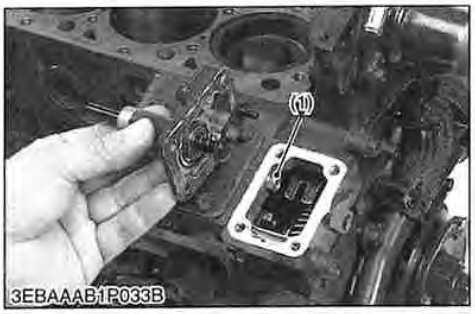

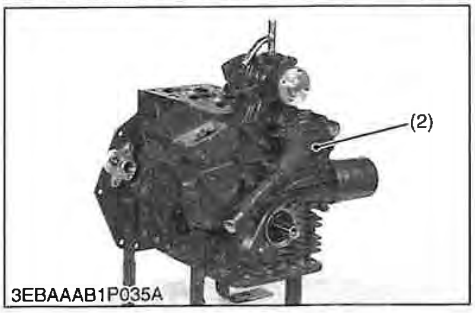

Speed Control Plate

1. Remove the screws (1) and separate the speed control plate (2).

(When reassembling)

- Remove the speed control plate (for mechanical governor only) (2) and make sure that the governor lever shaft (3) is correctly set in the governor fork (4).

■ **NOTE**

- **Electronic governor specification engine has modified from speed control plate to cover plate.**

(1) Screws and Copper Washers
(2) Speed Control Plate
(3) Governor Lever Shaft
(4) Governor Fork

9Y1210318ENS0069US0

Fan Drive Pulley

1. Secure the flywheel to keep it from turning.
2. Remove the fan drive pulley screw.
3. Draw out the fan drive pulley with a puller.

(When reassembling)

- Install the pulley to the crankshaft, aligning the mark (1) on them.
- Apply engine oil to the fan drive pulley retaining screws. And tighten them.

Tightening torque	Fan drive pulley screw	118 to 127 N·m 12.0 to 13.0 kgf·m 86.8 to 94.0 lbf·ft

(1) Alignment Mark

9Y1210318ENS0070US0

Gear Case

1. Remove the screw (1) of inside the gear case and outside screws.
2. Remove the gear case (2).

(When reassembling)

- Apply a liquid gasket (Three Bond 1215 or equivalent) to both sides of the gear case gasket.
- Be sure to set three O-rings inside the gear case.

(1) Screw (Inside)
(2) Gear Case

9Y1210318ENS0071US0

Petitioner MWE Investments, LLC, et al.
Exhibit 1003, Page 918

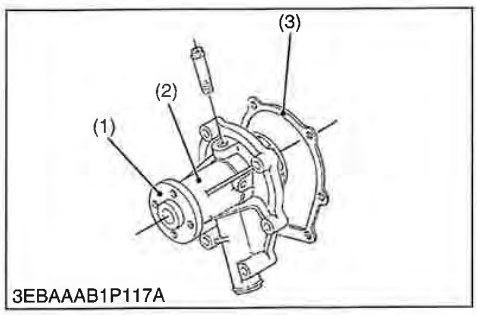

Water Pump Assembly

1. Remove the water pump assembly (2) from the gear case cover.

(When reassembling)

- Apply a liquid gasket (Three Bond 1215 or equivalent) to both sides of water pump gasket (3).

(1) Water Pump Flange
(2) Water Pump Assembly
(3) Water Pump Gasket

9Y1210318ENS0072US0

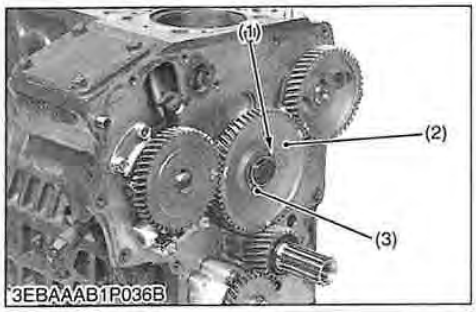

Idle Gear

1. Remove the external snap ring (1), the collar (3) and the idle gear (2).
2. Remove the idle gear shaft mounting screws (4).
3. Remove the idle gear shaft (5).

(When reassembling)

- Apply engine oil to the idle gear shaft mounting screw (4). And tighten them.
- Install the idle gear, aligning the mark (6) on the gears referring to the photo.

Tightening torque	Idle gear shaft mounting screw	9.81 to 11.2 N·m 1.00 to 1.15 kgf·m 7.24 to 8.31 lbf·ft

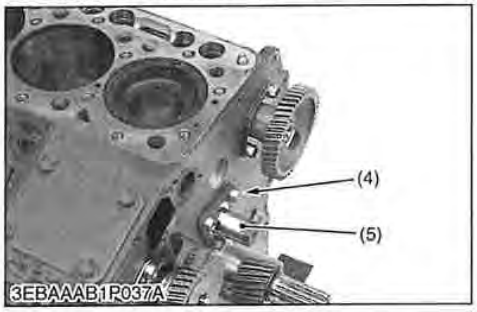

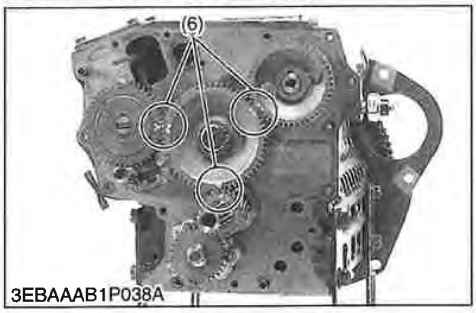

(1) External Snap Ring
(2) Idle Gear
(3) Idle Gear Collar
(4) Idle Gear Shaft Mounting Screw
(5) Idle Gear Shaft
(6) Alignment Mark

9Y1210318ENS0073US0

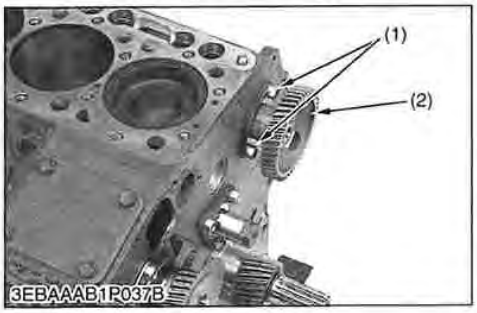

Camshaft

1. Remove the camshaft mounting screws (1) and draw out the camshaft with gear (2) on it.

(When reassembling)

- When install the camshaft, apply engine oil to the camshaft journals.
- Apply engine oil to the camshaft mounting screws. And tighten them.

(1) Camshaft Mounting Screw
(2) Camshaft Gear

9Y1210318ENS0074US0

Petitioner MWE Investments, LLC, et al.
Exhibit 1003, Page 919

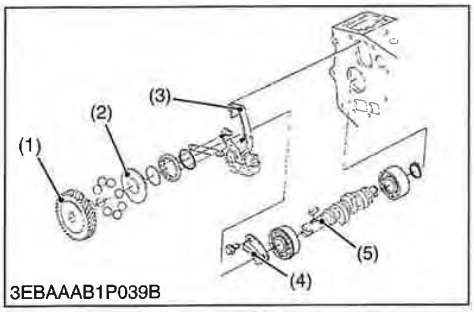

3EBAAAB1P039B

3EBAAAB1P040A

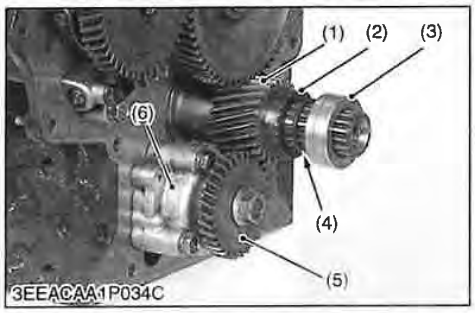

3EEACAA1P034C

Fuel Camshaft

1. Remove the retaining plate (4).
2. Remove the fork lever holder (for mechanical governor only) mounting screws (6), then draw out the injection pump gear (1) and fuel camshaft (5) with the governor fork assembly.

■ **NOTE**

- **Electronic governor specification engine does not install the fork lever (3) and governor assembly.**

(1) Injection Pump Gear
(2) Governor Sleeve
(3) Fork Lever
(4) Retaining Plate
(5) Fuel Camshaft
(6) Fork Lever Holder Mounting Screw

9Y1210318ENS0075US0

Oil Pump and Crankshaft Gear

1. Remove the oil pump gear (5).
2. Remove the oil pump (6).
3. Remove the collar (3), O-ring (4) and crankshaft oil slinger (2).

(When reassembling)

- Install the collar (3) after aligning the marks on the gear.

(1) Crankshaft Gear
(2) Crankshaft Oil Slinger
(3) Crankshaft Collar
(4) O-ring
(5) Oil Pump Gear
(6) Oil Pump

9Y1210318ENS0076US0

(6) Piston and Connecting Rod

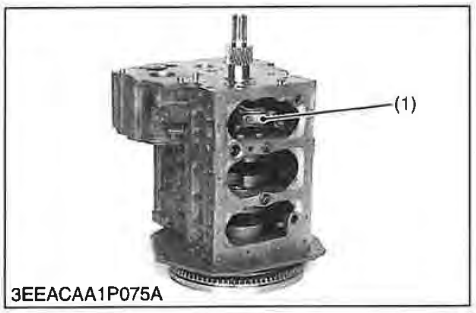

3EEACAA1P075A

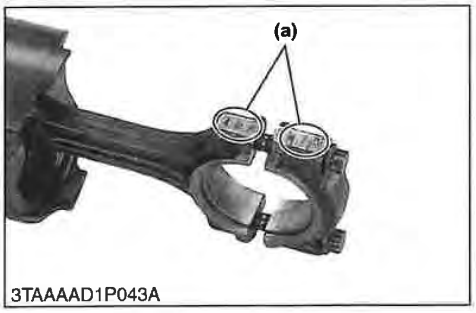

3TAAAAD1P043A

Connecting Rod Cap

1. Remove the connecting rod caps (1) using a hexagonal 8 mm socket.

(When reassembling)

- Align the marks **(a)** with each other. (Face the marks toward the intake manifold.)
- Apply engine oil to the connecting rod screws and lightly screw it in by hand, then tighten it to the specified torque.
  If the connecting rod screw won't be screwed in smoothly, clean the threads.
  If the connecting rod screw is still hard to screw in, replace it.

Tightening torque	Connecting rod screw	27 to 30 N·m 2.7 to 3.1 kgf·m 20 to 22 lbf·ft

(1) Connecting Rod Cap
(a) Mark

9Y1210318ENS0077US0

Petitioner MWE Investments, LLC, et al.
Exhibit 1003, Page 920

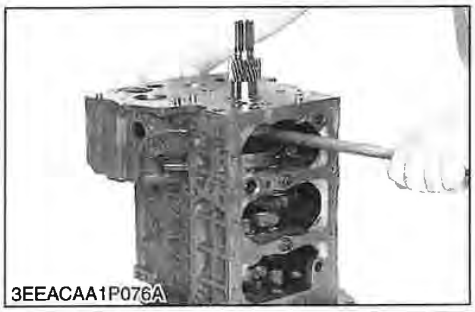
3EEACAA1P076A

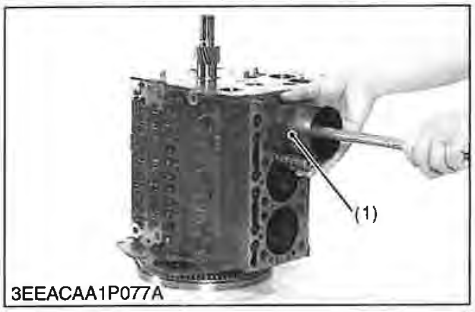

3EEACAA1P077A

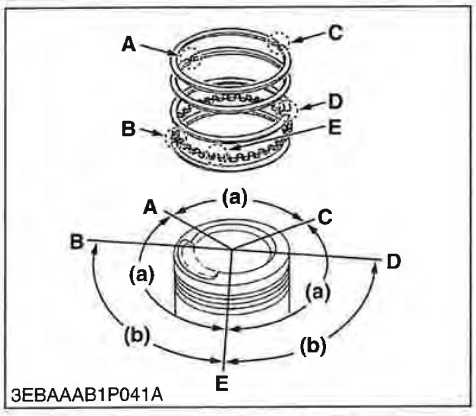

3EBAAAB1P041A

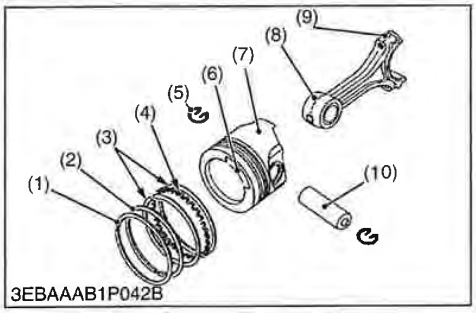

3EBAAAB1P042B

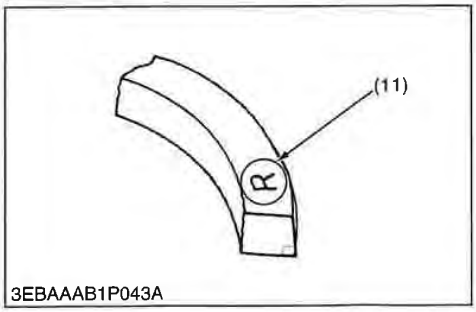

3EBAAAB1P043A

Piston

1. Turn the flywheel and bring the piston to top dead center.
2. Draw out the piston upward by lightly tapping it from the bottom of the crankcase with the grip of a hammer.
3. Draw out the other pistons after the same method as above.

(When reassembling)

- Before inserting the piston into the cylinder, apply enough engine oil to the piston.
- When inserting the piston into the cylinder, face the mark on the connecting rod to the fuel camshaft.
- When inserting the piston into the cylinder, place the gap **"C"** of the top compression ring on the opposite side of the slant portion, and stagger the gaps **"A"**, **"E"** of the second compression ring and spacer making 2.09 rad (120 °) from the gap of the top compression ring. Further, stagger the gaps **"D"**, **"B"** of the upper and lower side rail making 1.6 rad (90 °) from the gap of the spacer.

■ **IMPORTANT**

- **Do not change the combination of cylinder and piston. Make sure of the position of each piston by marking. For example, mark "1" on the No. 1 piston.**
- **When installing the piston into the cylinder, place the gaps of all of the piston rings as shown in the figure.**
- **Carefully insert the piston using a piston ring compressor (1). Otherwise, their chrome-plated section may be scratched, causing trouble inside the cylinder.**

(1) Piston Ring Compressor

A : Second Compression Ring Gap
B : Side Rail Gap
C : Top Compression Ring Gap
D : Side Rail Gap
E : Spacer Gap
(a) 2.09 rad (120 °)
(b) 1.6 rad (90 °)

9Y1210318ENS0078US0

Piston Ring and Connecting Rod

1. Remove the piston rings using a piston ring tool.
2. Remove the piston pin (10), and separate the connecting rod (8) from the piston (7).

(When reassembling)

- When installing the second compression ring (2), assemble the rings so that the manufacturer's mark (11) near the gap faces the top of the piston.
- Apply engine oil to the piston pin.
- When installing the connecting rod to the piston, immerse the piston in 80 °C (176 °F) oil for 10 to 15 minutes and insert the piston pin to the piston.
- When installing the connecting rod to the piston, align the mark (9) on the connecting rod to the plug recess (6).

■ **IMPORTANT**

- **Mark the same number on the connecting rod and the piston so as not to change the combination.**

(1) Top Ring
(2) Second Ring
(3) Side Rail
(4) Spacer
(5) Piston Pin Snap Ring
(6) Plug Recess
(7) Piston
(8) Connecting Rod
(9) Mark
(10) Piston Pin
(11) Manufacturer's Mark

9Y1210318ENS0079US0

Petitioner MWE Investments, LLC, et al.
Exhibit 1003, Page 921

(7) Crankshaft

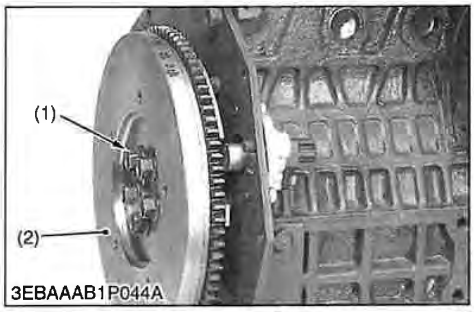

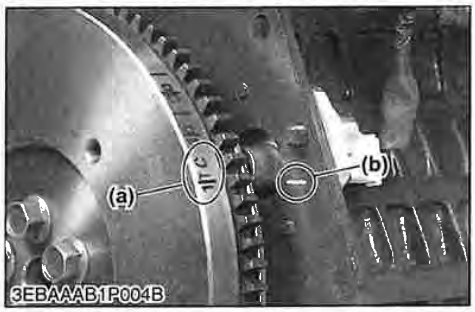

Flywheel

1. Secure the flywheel to keep it from turning using a flywheel stopper.
2. Remove all flywheel screws (1) and then remove the flywheel (2).

(When reassembling)

- Align the **"1TC"** mark **(a)** on the outer surface of the flywheel horizontally with the alignment mark **(b)** on the rear end plate. Now fit the flywheel in position.
- Apply engine oil to the threads and the undercut surface of the flywheel screw and fit the screw.

Tightening torque	Flywheel screw	54 to 58 N·m 5.5 to 6.0 kgf·m 40 to 43 lbf·ft

(1) Flywheel Screw
(2) Flywheel
(a) 1TC Mark
(b) Alignment Mark

9Y1210318ENS0080US0

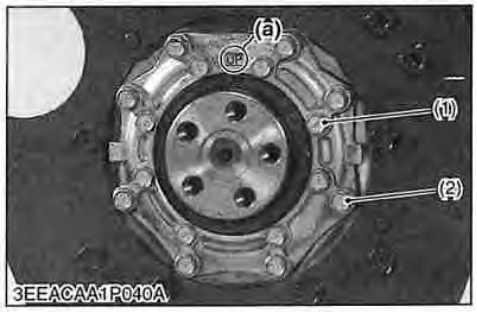

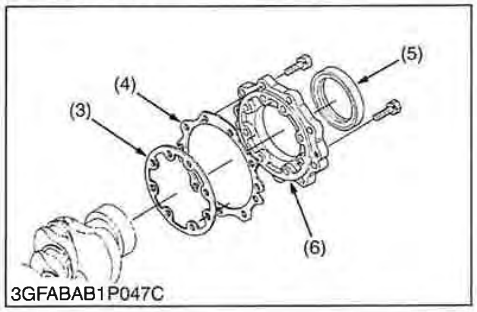

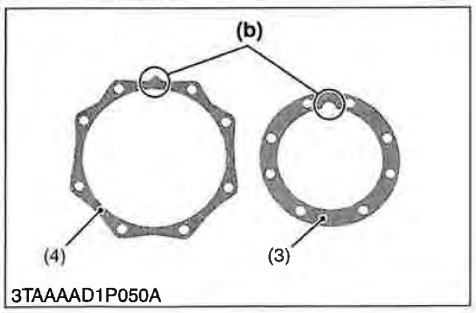

Bearing Case Cover

1. Remove the bearing case cover mounting screws. First, remove inside screws (1) and then outside screws (2).
2. Remove the bearing case cover (6).

(When reassembling)

- Fit the bearing case gasket (3) and the bearing case cover gasket (4) with correct directions.
- Install the bearing case cover (6) to position the casting mark "UP" **(a)** on it upward.
- Apply engine oil to the oil seal (5) lip and take care that it is not rolled when installing.
- Tighten the bearing case cover mounting screws with even force on the diagonal line.

Tightening torque	Bearing case cover mounting screw	9.81 to 11.2 N·m 1.00 to 1.15 kgf·m 7.24 to 8.31 lbf·ft

(1) Bearing Case Cover Mounting Screw (Inside)
(2) Bearing Case Cover Mounting Screw (Outside)
(3) Bearing Case Gasket
(4) Bearing Case Cover Gasket
(5) Oil Seal
(6) Bearing Case Cover
(a) Top Mark "UP"
(b) Upside

9Y1210318ENS0081US0

Petitioner MWE Investments, LLC, et al.
Exhibit 1003, Page 922

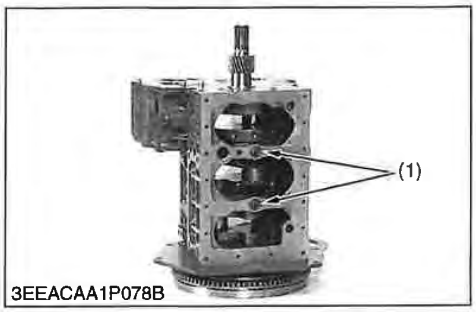

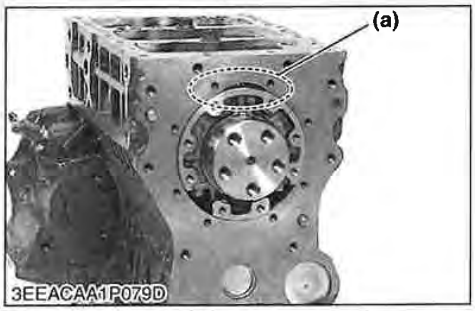

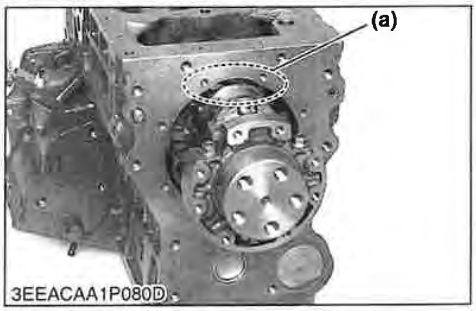

Crankshaft Assembly

1. Remove the main bearing case screw 2 (1).
2. Turn the crankshaft to set the crankpin of the third cylinder to the bottom dead center. Then draw out the crankshaft until the crankpin of the second cylinder comes to the center of the third cylinder.
3. Turn the crankshaft by 2.09 rad (120 °) counterclockwise to set the crankpin of the second cylinder to the bottom dead center. Draw out the crankshaft until the crankpin of the first cylinder comes to the center of the third cylinder.
4. Repeat the above steps to draw out all the crankshaft.

(When reassembling)

- Clean the oil passage of the crankshaft with compressed air.
- Install the crankshaft assembly, aligning the screw hole of main bearing case screw 2 with the screw hole of crankcase.
- When tightening the main bearing case screw 2, apply oil to the main bearing case screw 2 (1) and screw by hand before tightening the specific torque. If not smooth to screw by hand, align the screw holes between the crankcase and the main bearing case.

Tightening torque	Main bearing case screw 2	27 to 30 N·m 2.7 to 3.1 kgf·m 20 to 22 lbf·ft

(1) Main Bearing Case Screw 2

(a) Cut Place for Removing and Installing the Crankshaft

9Y1210318ENS0082US0

Petitioner MWE Investments, LLC, et al.
Exhibit 1003, Page 923

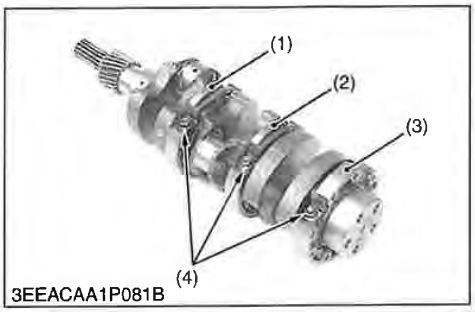

3EEACAA1P081B

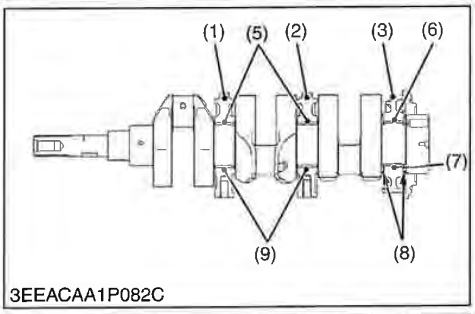

3EEACAA1P082C

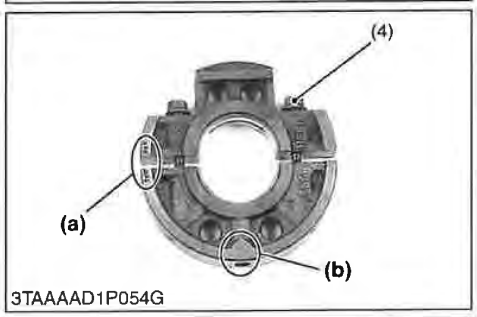

3TAAAAD1P054G

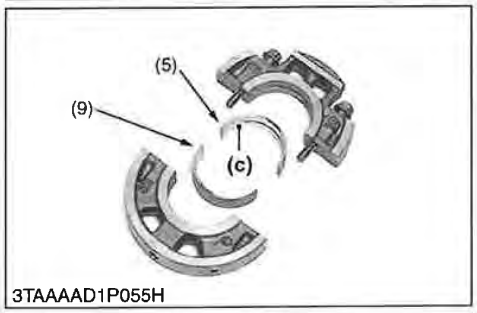

3TAAAAD1P055H

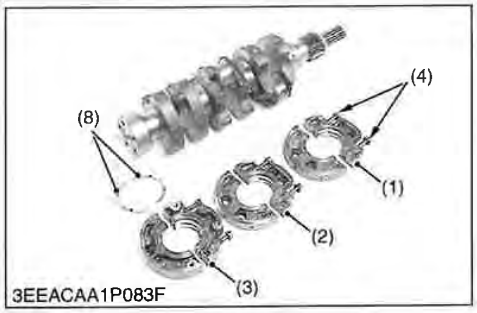

3EEACAA1P083F

Main Bearing Case Assembly

1. Remove the two main bearing case screws 1 (4), and remove the main bearing case assembly 1 (1), being careful with crankshaft bearing 3 (5) (9).
2. Remove the main bearing case assembly 2 (2) and the main bearing case assembly (3) as above. Keep in mind, however, that the thrust bearing (8) is installed in the main bearing case assembly (3).

(When reassembling)

- Clean the oil passage in the main bearing cases.
- Apply clean engine oil to the bearings.
- Install the main bearing case assemblies in original positions. Since diameters of main bearing cases vary, install them in order of marking **(b)** from the gear case side. (Refer to the figure.).
- Be careful not to confuse the top and bottom of the crankshaft bearing 3 (5) (9). (Install the bearing with the oil groove **(c)** up.).
- Match the alignment numbers **(a)** on the main bearing case assembly 1.
- Do the same for the main bearing case assembly 2 (2) and the main bearing case assembly (3) too.
- When installing the main bearing case 1 and 2, face the mark **"FLYWHEEL"** to the flywheel.
- Install the thrust bearing (8) with its oil groove facing outward.
- Confirm that the main bearing case moves smoothly after tightening the main bearing case screw 1 to the specified torque.

Tightening torque	Main bearing case screw 1	13 to 15 N·m 1.3 to 1.6 kgf·m 9.4 to 11 lbf·ft

(1) Main Bearing Case Assembly 1
(2) Main Bearing Case Assembly 2
(3) Main Bearing Case Assembly
(4) Main Bearing Case Screw 1
(5) Crankshaft Bearing 3 (Upper, with Oil Groove)
(6) Crankshaft Bearing 2 (Upper, with Oil Groove)
(7) Crankshaft Bearing 2 (Lower)
(8) Thrust Bearing
(9) Crankshaft Bearing 3 (Lower)

(a) Alignment Number
(b) Marking (1 or 2)
(c) Oil Groove

9Y1210318ENS0083US0

Petitioner MWE Investments, LLC, et al.
Exhibit 1003, Page 924

(8) Starter

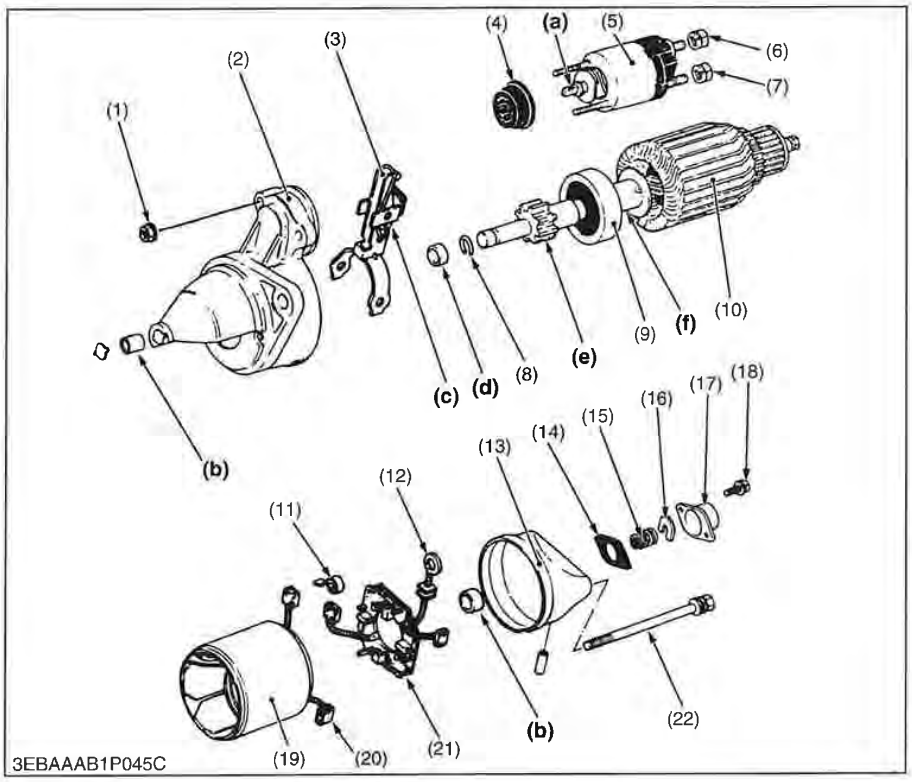

(1) Solenoid Switch Mounting Nut
(2) Starter Drive Housing
(3) Drive Lever
(4) Gasket
(5) Solenoid Switch
(6) **B** Terminal Nut
(7) **C** Terminal Nut
(8) Snap Ring
(9) Overrunning Clutch
(10) Armature
(11) Brush Spring
(12) Connecting Lead
(13) Rear End Frame
(14) Gasket
(15) Brake Spring
(16) Brake Shoe
(17) End Frame Cap
(18) Screw
(19) Yoke
(20) Brush
(21) Brush Holder
(22) Through Bolt

1. Unscrew the **C** terminal nut (7), and disconnect the connecting lead (12).
2. Unscrew the solenoid switch mounting nuts (1), and remove the solenoid switch (5).
3. Remove the end frame cap (17).
4. Remove the brake shoe (16), brake spring (15) and gasket (14).
5. Unscrew the through bolts (22), and remove the rear end frame (13).
6. Remove the brush from the brush holder while holding the spring up.
7. Remove the brush holder (21).
8. Draw out the yoke (19) from the starter drive housing (2).
9. Draw out the armature (10) with the drive lever (3).

■ **NOTE**

- **Do not damage to the brush and commutator.**

(When reassembling)

- Apply grease (DENSO.CO.LTD. No. 50 or equivalent) to the parts indicated in the figure.
  - Joint of solenoid switch **(a)**
  - Bushing **(b)**
  - Drive lever **(c)**
  - Collar **(d)**
  - Teeth of pinion gear **(e)**
  - Armature shaft **(f)**

Tightening torque	Starter's terminal **B** mounting nut	5.9 to 11 N·m 0.60 to 1.2 kgf·m 4.4 to 8.6 lbf·ft

9Y1210318ENS0084US0

Petitioner MWE Investments, LLC, et al.
Exhibit 1003, Page 925

(9) Dynamo

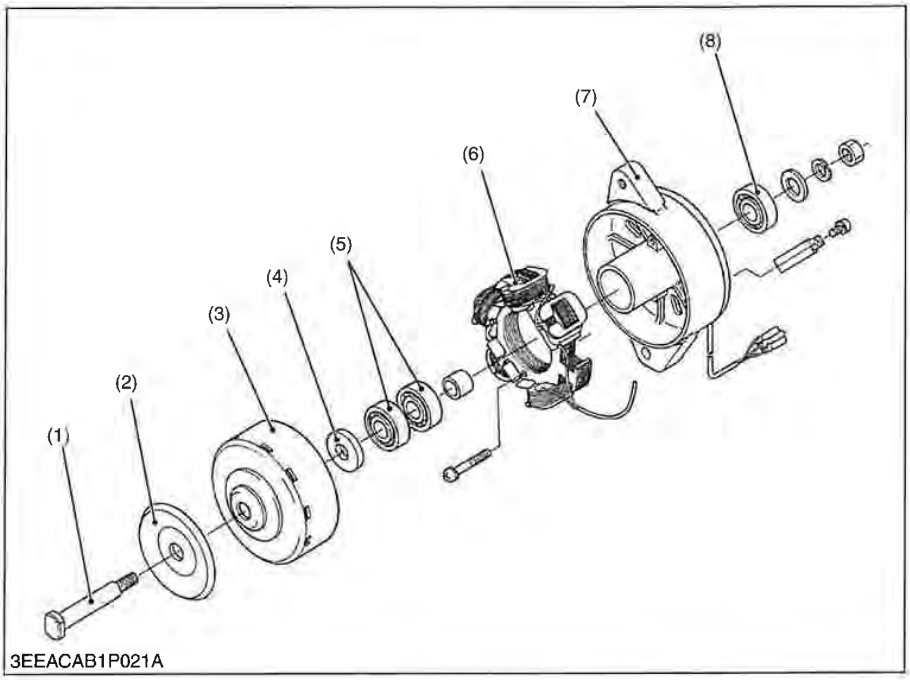

(1) Shaft
(2) Pulley
(3) Rotor
(4) Collar
(5) Bearing
(6) Stator
(7) Plate
(8) Bearing

1. Remove the nut and separate the plate (7).
2. Tap out the shaft (1) from the rotor (3).
3. Unscrew the screws and remove the stator (6).

(When reassembling)

- Take care the direction of the collar (4), the flat side should face to the pulley side.

Tightening torque	Dynamo's pulley nut	40 to 44 N·m 4.0 to 4.5 kgf·m 29 to 32 lbf·ft

9Y1210318ENS0085US0

Petitioner MWE Investments, LLC, et al.
Exhibit 1003, Page 926

(10) Alternator

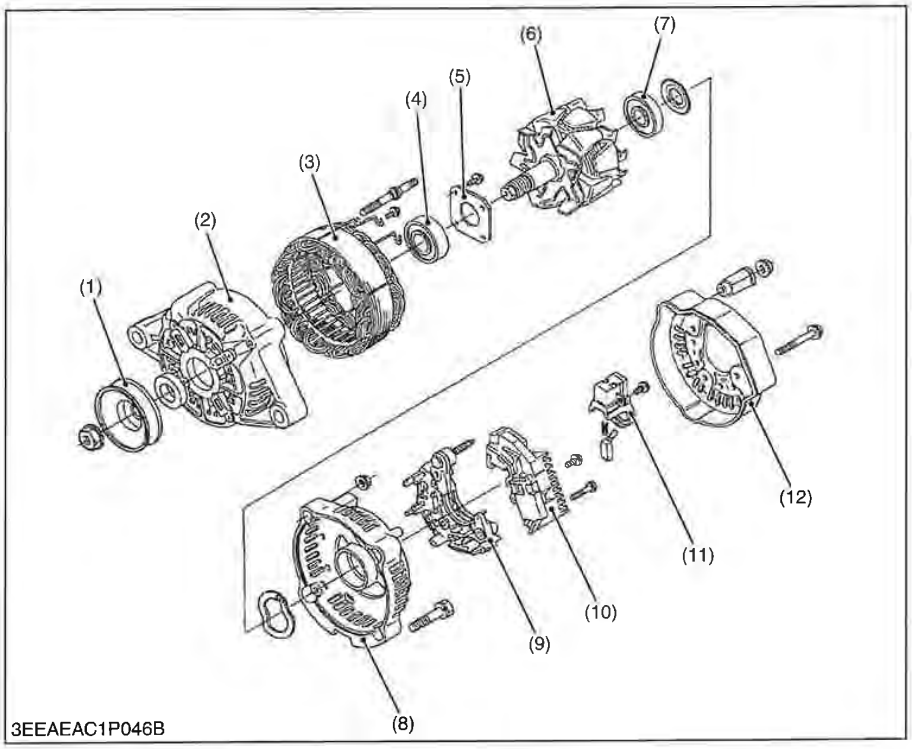

(1) Pulley
(2) Drive End Frame
(3) Stator
(4) Bearing
(5) Retainer Plate
(6) Rotor
(7) Bearing
(8) Rear End Frame
(9) Rectifier
(10) IC Regulator
(11) Brush Holder
(12) Rear End Cover

1. Remove the pulley (1).
2. Remove the rear end cover (12).
3. Remove the brush holder (11).
4. Remove the IC regulator (10).
5. Remove the four screws holding the stator lead wires.
6. Remove the rectifier (9).
7. Remove the rear end frame (8).
8. Press out the rotor (6) from drive end frame (2).
9. Remove the retainer plate (5).
10. Press out the bearing (4) from drive end frame (2) with a press and jig.
11. Lightly secure the rotor with a vise to prevent damage, and remove the bearing (7) with a puller

(When reassembling)

Tightening torque	Alternator's pulley nut	58.4 to 78.9 N·m 5.95 to 8.05 kgf·m 43.1 to 58 2 lbf·ft

9Y1210318ENS0086US0

Petitioner MWE Investments, LLC, et al.
Exhibit 1003, Page 927

[3] SERVICING

(1) Cylinder Head and Valves

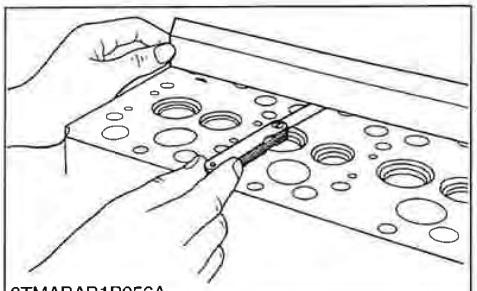
3TMABAB1P056A

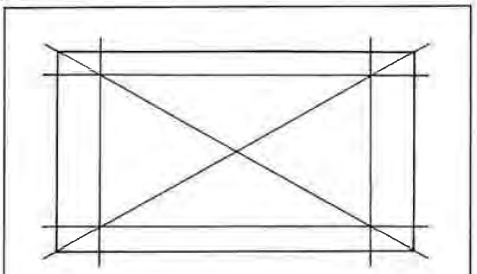
3EEABAB1P112B

Cylinder Head Surface Flatness

1. Clean the cylinder head surface.
2. Place a straightedge on the cylinder head's four sides and two diagonal as shown in the figure.
   Measure the clearance with a feeler gauge.
3. If the measurement exceeds the allowable limit, correct it with a surface grinder.

■ **IMPORTANT**

- **Be sure to check the valve recessing after correcting.**

Cylinder head surface flatness	Allowable limit	0.05 mm 0.002 in.

9Y1210318ENS0087US0

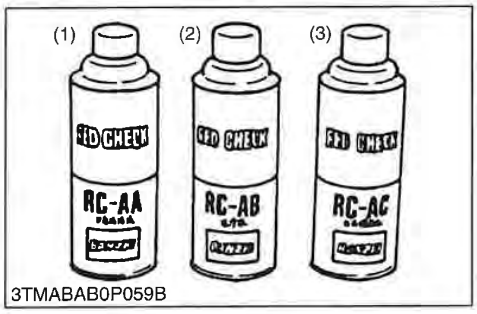

3TMABAB0P059B

Cylinder Head Flaw

1. Prepare an air spray red check.
2. Clean the surface of the cylinder head with the detergent (2).
3. Spray the cylinder head surface with the red permeative liquid (1). Leave it five to ten minutes after spraying.
4. Wash away the red permeative liquid on the cylinder head surface with the detergent (2).
5. Spray the cylinder head surface with the white developer (3).
6. If flawed, it can be identified as red marks.

(1) Red Permeative Liquid
(2) Detergent
(3) White Developer

9Y1210318ENS0088US0

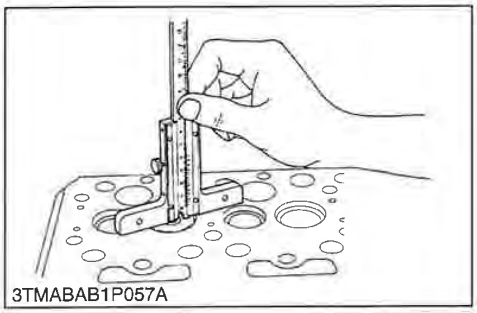
3TMABAB1P057A

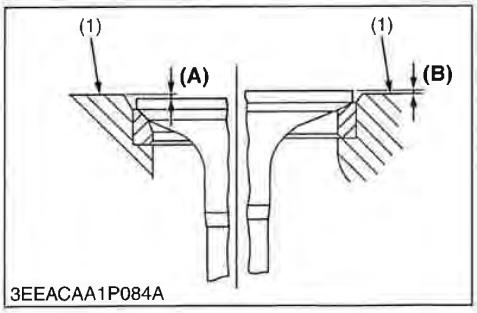

3EEACAA1P084A

Valve Recessing

1. Clean the cylinder head, the valve face and seat.
2. Insert the valve into the valve guide.
3. Measure the valve recessing with a depth gauge.
4. If the measurement exceeds the allowable limit, replace the valve.
5. If it still exceeds the allowable limit after replacing the valve, replace the cylinder head.

Valve recessing (Intake and Exhaust)	Factory spec.	0.10 (protrusion) to 0.10 (recessing) mm 0.0039 (protrusion) to 0.0039 (recessing) in.
	Allowable limit	0.30 (recessing) mm 0.012 (recessing) in.

(1) Cylinder Head Surface
(A) Recessing
(B) Protrusion

9Y1210318ENS0089US0

Petitioner MWE Investments, LLC, et al.
Exhibit 1003, Page 928

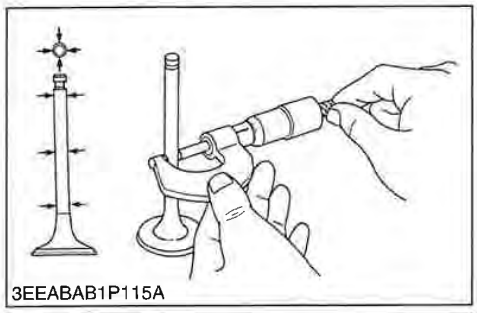
3EEABAB1P115A

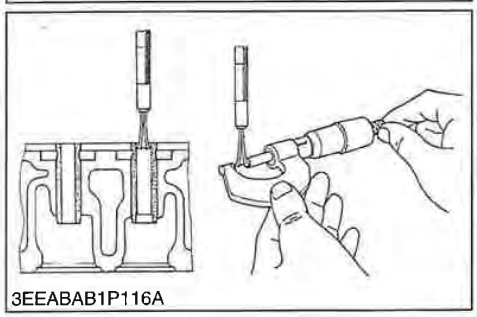
3EEABAB1P116A

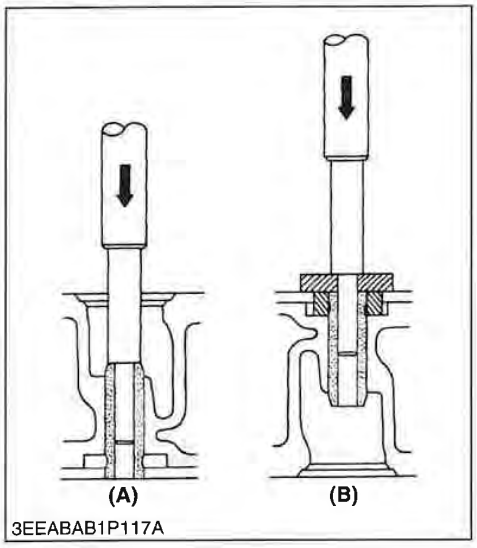

3EEABAB1P117A

Clearance between Valve Stem and Valve Guide

1. Remove carbon from the valve guide section.
2. Measure the valve stem O.D. with an outside micrometer.
3. Measure the valve guide I.D. with a small hole gauge, and calculate the clearance.
4. If the clearance exceeds the allowable limit, replace the valves. If it still exceeds the allowable limit, replace the valve guide.

Clearance between valve stem and valve guide	Factory spec.	0.030 to 0.057 mm 0.0012 to 0.0022 in.
	Allowable limit	0.10 mm 0.0039 in.

Valve stem O.D.	Factory spec.	5.968 to 5.980 mm 0.2350 to 0.2354 in.
Valve guide I.D.	Factory spec.	6.010 to 6.025 mm 0.2367 to 0.2372 in.

9Y1210318ENS0090US0

Replacing Valve Guide

(When removing)

1. Press out the used valve guide using a valve guide replacing tool.

(When installing)

1. Clean a new valve guide and valve guide bore, and apply engine oil to them.
2. Press in a new valve guide using a valve guide replacing tool.
3. Ream precisely the I.D. of the valve guide to the specified dimension.

Valve guide I.D.(Intake and exhaust)	Factory spec.	6.010 to 6.025 mm 0.2367 to 0.2372 in.

■ **IMPORTANT**

- **Do not hit the valve guide with a hammer during replacement.**

(A) When Removing **(B) When Installing**

9Y1210318ENS0091US0

Petitioner MWE Investments, LLC, et al.
Exhibit 1003, Page 929

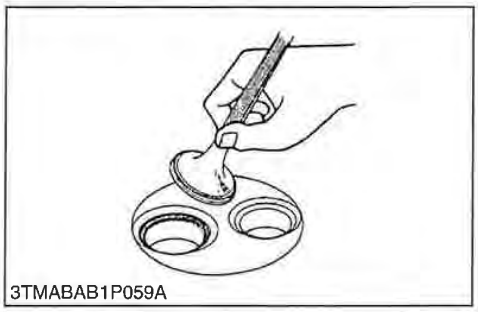
3TMABAB1P059A

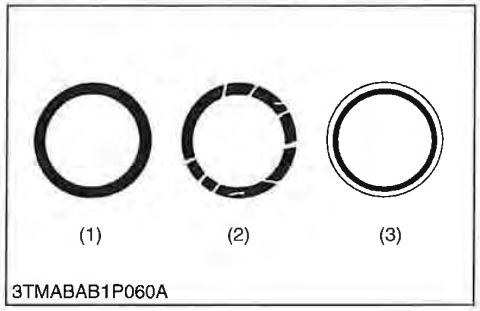

3TMABAB1P060A

Valve Seating

1. Coat the valve face lightly with prussian blue and put the valve on its seat to check the contact.
2. If the valve does not seat all the way around the valve seat or the valve contact is less than 70 %, correct the valve seating as follows.
3. If the valve contact does not comply with the reference value, replace the valve or correct the contact of valve seating.

Valve seat width	Factory spec.	2.12 mm 0.0835 in

(1) Correct
(2) Incorrect
(3) Incorrect

9Y1210318ENS0092US0

Petitioner MWE Investments, LLC, et al.
Exhibit 1003, Page 930

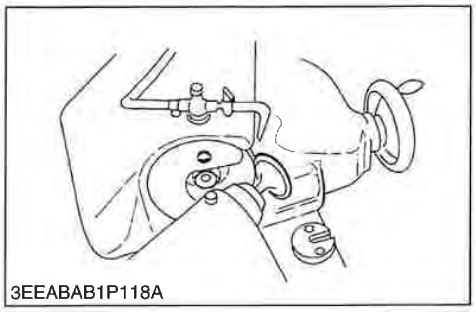
3EEABAB1P118A

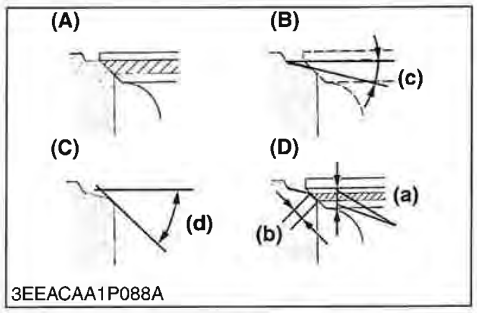

3EEACAA1P088A

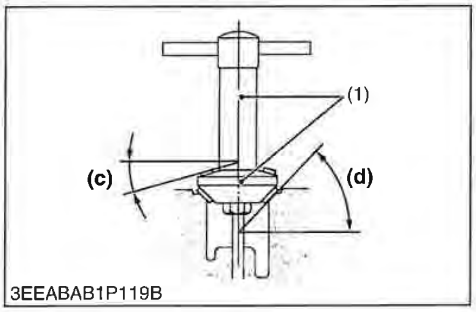

3EEABAB1P119B

Correcting Valve and Valve Seat

■ **NOTE**
- **Before correcting the valve and seat, check the valve stem and the I.D. of valve guide section, and repair them if necessary.**
- **After correcting the valve seat, be sure to check the valve recessing.**

1) Correcting Valve

1. Correct the valve with a valve refacer.

Valve face angle	Factory spec.	0.79 rad 45 °

2) Correcting Valve Seat

1. Slightly correct the seat surface with a 0.79 rad (45 °) valve seat cutter.
2. Fitting the valve, check the contact position of the valve face and seat surface with prussian blue. (Visual check) [If the valve has been used for a long period, the seat tends to come in contact with the upper side of the valve face.]
3. Grind the upper surface of the seat with a 0.26 rad (15 °) valve seat cutter until the valve seat touches to the center of the valve face (so that **(a)** equals **(b)** as shown in the figure.)
4. Grind the seat with a 0.79 rad (45 °) valve seat cutter again, and visually recheck the contact between the valve and seat.
5. Repeat steps 3 and 4 until the correct contact is achieved.
6. Continue lapping until the seated rate becomes more than 70 % of the total contact.

Valve seat angle	Factory spec.	0.79 rad 45 °

(1) Valve Seat Cutter

(A) Check Contact
(B) Correct Seat Width
(C) Check Seat Surface
(D) Check Contact

(a) Identical Dimensions
(b) Valve Seat Width
(c) 0.26 rad (15 °)
(d) 0.79 rad (45 °)

9Y1210318ENS0093US0

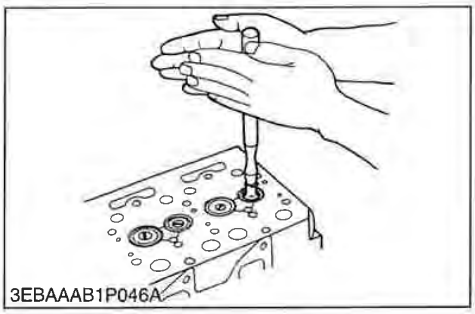
3EBAAAB1P046A

Valve Lapping

1. Apply compound evenly to the valve lapping surface.
2. Insert the valve into the valve guide. Lap the valve onto its seat with a valve flapper or screwdriver.
3. After lapping the valve, wash the compound away and apply oil, then repeat valve lapping with oil.
4. Apply prussian blue to the contact surface to check the seated rate. If it is less than 70 %, repeat valve lapping again.

■ **IMPORTANT**
- **When valve lapping is performed, be sure to check the valve recessing and adjust the valve clearance after assembling the valve.**

9Y1210318ENS0094US0

Petitioner MWE Investments, LLC, et al.
Exhibit 1003, Page 931

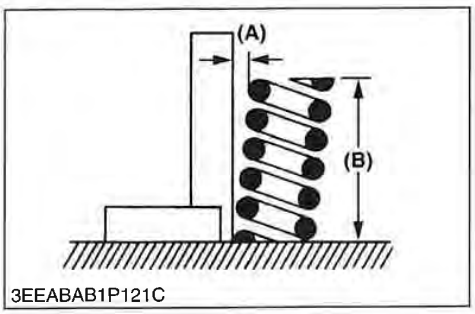

3EEABAB1P121C

Free Length and Tilt of Valve Spring

1. Measure the free length **(B)** of valve spring with vernier calipers. If the measurement is less than the allowable limit, replace it.
2. Put the spring on a surface plate, place a square on the side of the spring.
3. Check to see if the entire side is in contact with the square. Rotate the valve spring and measure the maximum tilt **(A)**. If the measurement exceeds the allowable limit, replace it.
4. Check the entire surface of the valve spring for scratches. If there is any defect, replace it.

Tilt **(A)**	Allowable limit	1.0 mm 0.039 in.

Free length **(B)**	Factory spec.	31.3 to 31.8 mm 1.24 to 1.25 in.
	Allowable limit	28.4 mm 1.12 in.

(A) Tilt **(B) Free length**

9Y1210318ENS0095US0

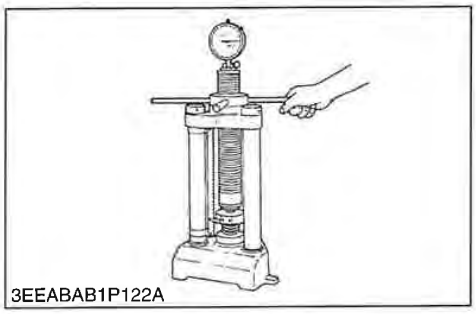
3EEABAB1P122A

Valve Spring Setting Load

1. Place the valve spring on a tester and compress it to the same length it is actually compressed in the engine.
2. Read the compression load on the gauge.
3. If the measurement is less than the allowable limit, replace it.

Setting load / setting length	Factory spec.	65 N / 27.0 mm 6.6 kgf / 27.0 mm 15 lbf / 1.06 in.
	Allowable limit	55 N / 27.0 mm 5.6 kgf / 27.0 mm 12 lbf / 1.06 in.

9Y1210318ENS0096US0

3TAAAAD1P060A

Oil Clearance between Rocker Arm and Rocker Arm Shaft

1. Measure the rocker arm shaft O.D. with an outside micrometer.
2. Measure the rocker arm I.D. with an inside micrometer, and then calculate the oil clearance.
3. If the oil clearance exceeds the allowable limit, replace the rocker arm and measure the oil clearance again. If it still exceeds the allowable limit, replace also the rocker arm shaft.

Oil clearance between rocker arm and rocker arm shaft	Factory spec.	0.016 to 0.045 mm 0.00063 to 0.0017 in.
	Allowable limit	0.15 mm 0.0059 in.

Rocker arm shaft O.D.	Factory spec.	10.473 to 10.484 mm 0.41233 to 0.41275 in.
Rocker arm I.D.	Factory spec.	10.500 to 10.518 mm 0.41339 to 0.41409 in.

9Y1210318ENS0097US0

Petitioner MWE Investments, LLC, et al.
Exhibit 1003, Page 932

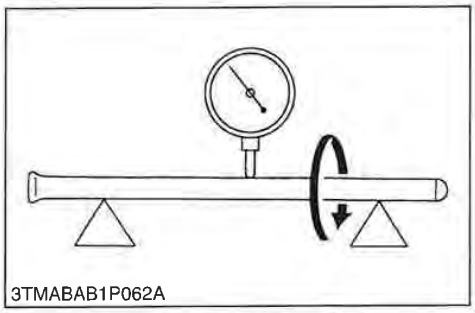
3TMABAB1P062A

Push Rod Alignment

1. Place the push rod on V blocks.
2. Measure the push rod alignment.
3. If the measurement exceeds the allowable limit, replace the push rod.

Push rod alignment	Allowable limit	0.25 mm 0.0098 in.

9Y1210318ENS0098US0

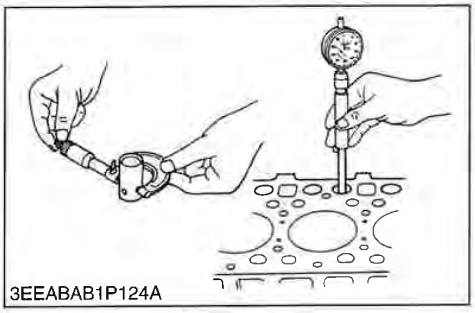
3EEABAB1P124A

Oil Clearance between Tappet and Tappet Guide Bore

1. Measure the tappet O.D. with an outside micrometer.
2. Measure the I.D. of the tappet guide bore with a cylinder gauge, and calculate the oil clearance.
3. If the oil clearance exceeds the allowable limit or the tappet is damaged, replace the tappet.

Oil clearance between tappet and tappet guide bore	Factory spec.	0.016 to 0.052 mm 0.00063 to 0.0020 in.
	Allowable limit	0.10 mm 0.0039 in.
Tappet O.D.	Factory spec.	17.966 to 17.984 mm 0.70733 to 0.70803 in.
Tappet guide bore I.D.	Factory spec.	18.000 to 18.018 mm 0.70867 to 0.70937 in.

9Y1210318ENS0099US0

(2) Timing Gear and Camshaft

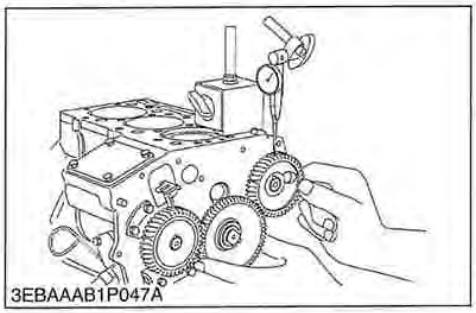
3EBAAAB1P047A

Timing Gear Backlash

1. Set a dial indicator (lever type) with its tip on the gear tooth.
2. Move the gear to measure the backlash, holding its mating gear.
3. If the backlash exceeds the allowable limit, check the oil clearance of the shafts and the gear.
4. If the oil clearance is proper, replace the gear.

Backlash between idle gear and crank gear	Factory spec.	0.0430 to 0.124 mm 0.00170 to 0.00488 in.
	Allowable limit	0.15 mm 0.0059 in.
Backlash between idle gear and cam gear	Factory spec.	0.0470 to 0.123 mm 0.00185 to 0.00484 in.
	Allowable limit	0.15 mm 0.0059 in.
Backlash between idle gear and injection pump gear	Factory spec.	0.0410 to 0.124 mm 0.00162 to 0.00488 in.
	Allowable limit	0.15 mm 0.0059 in.
Backlash between oil pump drive gear and crank gear	Factory spec.	0.0410 to 0.123 mm 0.00162 to 0.00484 in.
	Allowable limit	0.15 mm 0.0059 in.

9Y1210318ENS0100US0

Petitioner MWE Investments, LLC, et al.
Exhibit 1003, Page 933

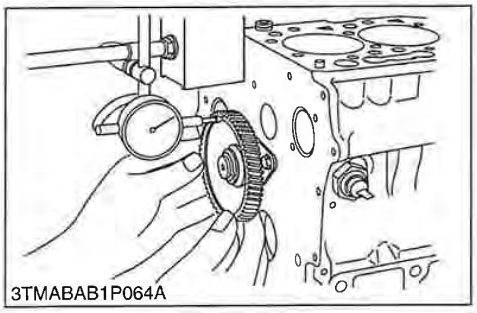
3TMABAB1P064A

Idle Gear Side Clearance

1. Set a dial indicator with its tip on the idle gear.
2. Measure the side clearance by moving the idle gear to the front and rear.
3. If the measurement exceeds the allowable limit, replace the idle gear collar.

Idle gear side clearance	Factory spec.	0.20 to 0.51 mm 0.0079 to 0.020 in.
	Allowable limit	0.80 mm 0.031 in.

9Y1210318ENS0101US0

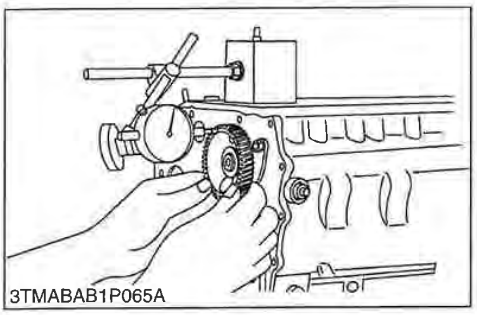
3TMABAB1P065A

Camshaft Side Clearance

1. Set a dial indicator with its tip on the camshaft.
2. Measure the side clearance by moving the cam gear to the front and rear.
3. If the measurement exceeds the allowable limit, replace the camshaft stopper.

Camshaft side clearance	Factory spec.	0.15 to 0.31 mm 0.0059 to 0.012 in.
	Allowable limit	0.50 mm 0.020 in.

9Y1210318ENS0102US0

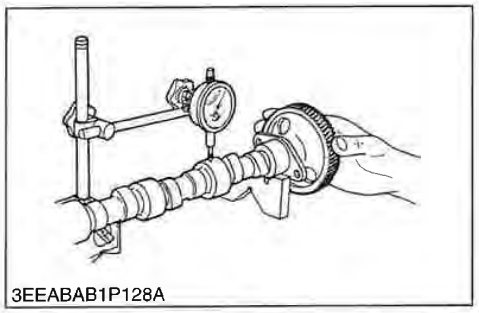
3EEABAB1P128A

Camshaft Alignment

1. Support the camshaft with V blocks on the surface plate at both end journals.
2. Set a dial indicator with its tip on the intermediate journal.
3. Measure the camshaft alignment.
4. If the measurement exceeds the allowable limit, replace the camshaft.

Camshaft alignment	Allowable limit	0.01 mm 0.0004 in.

9Y1210318ENS0103US0

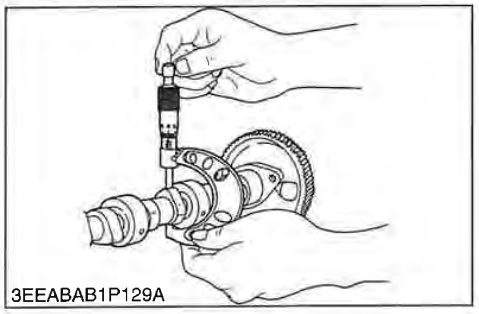
3EEABAB1P129A

Cam Height

1. Measure the height of the cam at its highest point with an outside micrometer.
2. If the measurement is less than the allowable limit, replace the camshaft.

Cam height of intake and exhaust	Factory spec.	26.88 mm 1.058 in.
	Allowable limit	26.83 mm 1.056 in.

9Y1210318ENS0104US0

Petitioner MWE Investments, LLC, et al.
Exhibit 1003, Page 934

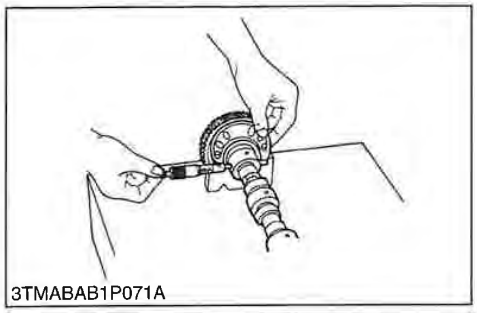
3TMABAB1P071A

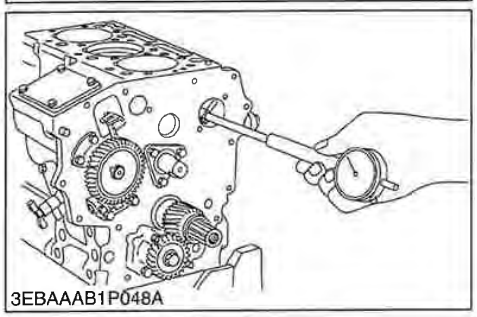
3EBAAAB1P048A

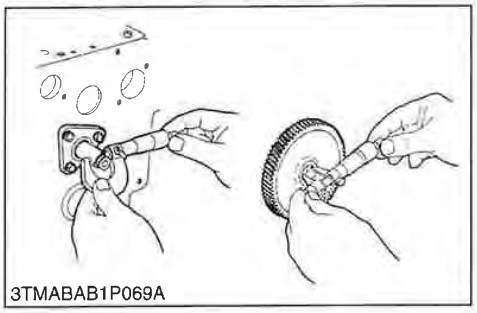
3TMABAB1P069A

Oil Clearance of Camshaft Journal

1. Measure the camshaft journal O.D. with an outside micrometer.
2. Measure the cylinder block bore I.D. for camshaft with a inside micrometer, and calculate the oil clearance.
3. If the clearance exceeds the allowable limit, replace the camshaft.

Oil clearance of camshaft journal	Factory spec.	0.050 to 0.091 mm 0.0020 to 0.0035 in.
	Allowable limit	0.15 mm 0.0059 in.

Camshaft journal O.D.	Factory spec.	32.934 to 32.950 mm 1.2967 to 1.2972 in.
Camshaft bearing I.D. (Cylinder block bore I.D.)	Factory spec.	33.000 to 33.025 mm 1.2993 to 1.3001 in.

9Y1210318ENS0105US0

Oil Clearance between Idle Gear Shaft and Idle Gear Bushing

1. Measure the idle gear shaft O.D. with an outside micrometer.
2. Measure the idle gear bushings I.D. with an inside micrometer, and calculate the oil clearance.
3. If the oil clearance exceeds the allowable limit, replace the bushing.
4. If it still exceeds the allowable limit, replace the idle gear shaft.

Oil clearance between idle gear shaft and idle gear bushing	Factory spec.	0.020 to 0.084 mm 0.00079 to 0.0033 in.
	Allowable limit	0.10 mm 0.0039 in.

Idle gear shaft O.D.	Factory spec.	19.967 to 19.980 mm 0.78611 to 0.78661 in.
Idle gear bushing I.D.	Factory spec.	20.000 to 20.051 mm 0.78741 to 0.78940 in.

9Y1210318ENS0106US0

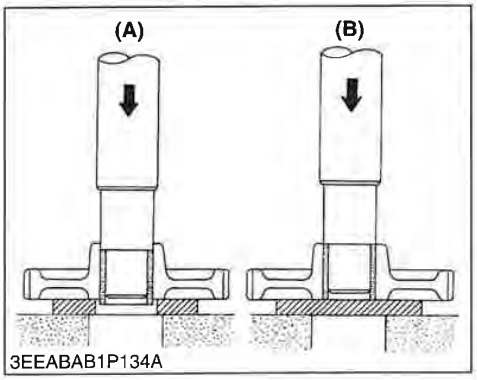

3EEABAB1P134A

Replacing Idle Gear Bushing

(When removing)

1. Press out the used idle gear bushing using an idle gear bushing replacing tool.

(When installing)

1. Clean a new idle gear bushing and idle gear bore, and apply engine oil to them.
2. Press in a new bushing using an idle gear bushing replacing tool, until it is flush with the end of the idle gear.

(A) When Removing **(B) When Installing**

9Y1210318ENS0107US0

Petitioner MWE Investments, LLC, et al.
Exhibit 1003, Page 935

(3) Piston and Connecting Rod

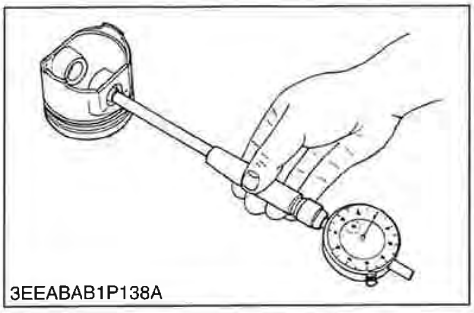
3EEABAB1P138A

Piston Pin Bore I.D.

1. Measure the piston pin bore I.D. in both the horizontal and vertical directions with a cylinder gauge.
2. If the measurement exceeds the allowable limit, replace the piston.

Piston pin bore I.D.	Factory spec.	20.000 to 20.013 mm 0.78741 to 0.78791 in.
	Allowable limit	20.05 mm 0.7894 in.

9Y1210318ENS0108US0

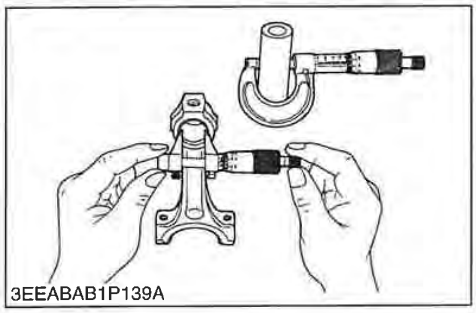
3EEABAB1P139A

Oil Clearance between Piston Pin and Small End Bushing

1. Measure the O.D. of the piston pin where it contacts the bushing with an outside micrometer.
2. Measure the small end bushing I.D. with an inside micrometer, and calculate the oil clearance.
3. If the oil clearance exceeds the allowable limit, replace the bushing. If it still exceeds the allowable limit, replace the piston pin.

Oil clearance between piston pin and small end bushing	Factory spec.	0.012 to 0.038 mm 0.00048 to 0.0014 in.
	Allowable limit	0.10 mm 0.0039 in.

Piston pin O.D.	Factory spec.	20.002 to 20.013 mm 0.78748 to 0.78791 in.
Small end bushing I.D.	Factory spec.	20.025 to 20.040 mm 0.78839 to 0.78897 in.

9Y1210318ENS0109US0

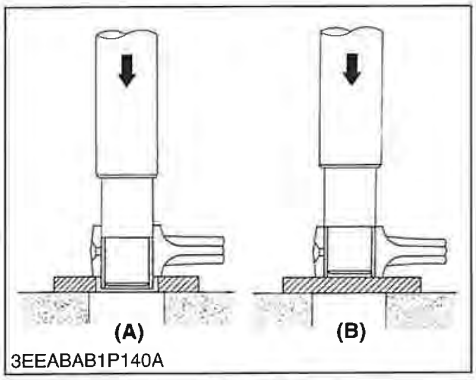

3EEABAB1P140A

Replacing Small End Bushing

(When removing)

1. Press out the used bushing using a small end bushing replacing tool. (Refer to "SPECIAL TOOLS".)

(When installing)

1. Clean a new small end bushing and bore, and apply engine oil to them.
2. Using a small end bushing replacing tool, press in a new bushing (service parts) taking due care to see that the connecting rod hole matches the bushing hole.

[Servicing parts dimension]

Oil clearance between piston pin and small end bushing (Spare parts)	Factory spec.	0.013 to 0.075 mm 0.00052 to 0.0029 in.
	Allowable limit	0.15 mm 0.0059 in.

Small end bushing I.D. (Spare parts)	Factory spec.	20.026 to 20.077 mm 0.78843 to 0.79043 in.

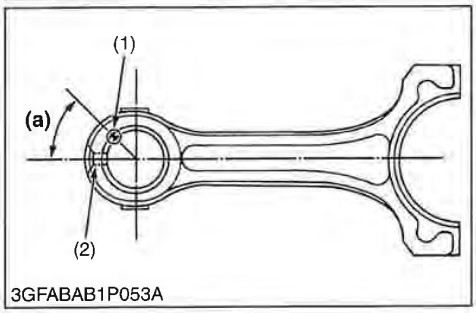

3GFABAB1P053A

(1) Seam
(2) Oil Hole

(A) When Removing
(B) When Installing
(a) 0.79 rad (45 °)

9Y1210318ENS0110US0

Petitioner MWE Investments, LLC, et al.
Exhibit 1003, Page 936

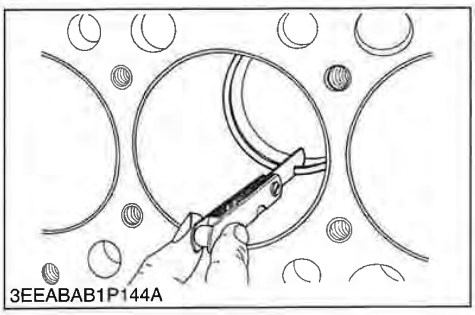
3EEABAB1P144A

Piston Ring Gap

1. Insert the piston ring into the lower part of the cylinder (the least worn out part) with a piston ring compressor and piston.
2. Measure the ring gap with a feeler gauge.
3. If the measurement exceeds the allowable limit, replace the piston ring.

Piston ring gap	Top ring	Factory spec.	0.15 to 0.35 mm 0.0059 to 0.013 in.
		Allowable limit	1.25 mm 0.0492 in.
	Second ring	Factory spec.	0.30 to 0.45 mm 0.012 to 0.017 in.
		Allowable limit	1.25 mm 0.0492 in.
	Oil ring	Factory spec.	0.20 to 0.70 mm 0.0079 to 0.027 in.
		Allowable limit	1.25 mm 0.0492 in.

9Y1210318ENS0111US0

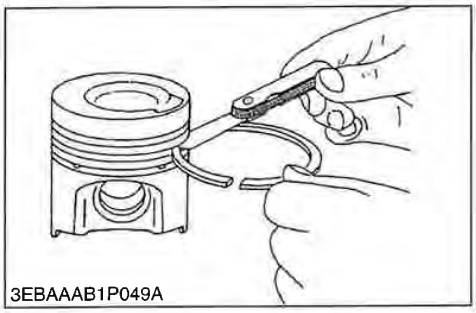
3EBAAAB1P049A

Clearance between Piston Ring and Piston Ring Groove

1. Clean the rings and the ring grooves, and install each ring in its groove.
2. Measure the clearance between the ring and the groove with a thickness gauge.
3. If the clearance exceeds the allowable limit, replace the piston ring.
4. If the clearance still exceeds the allowable limit with new ring, replace the piston.

Clearance between piston ring and piston ring groove	Top ring	Factory spec.	0.080 to 0.12 mm 0.0032 to 0.0047 in.
		Allowable limit	0.15 mm 0.0059 in.
	Second ring	Factory spec.	0.065 to 0.10 mm 0.0026 to 0.0039 in.
		Allowable limit	0.15 mm 0.0059 in.
	Oil ring	Factory spec.	0.060 to 0.15 mm 0.0024 to 0.0059 in.
		Allowable limit	0.20 mm 0.0079 in.

9Y1210318ENS0112US0

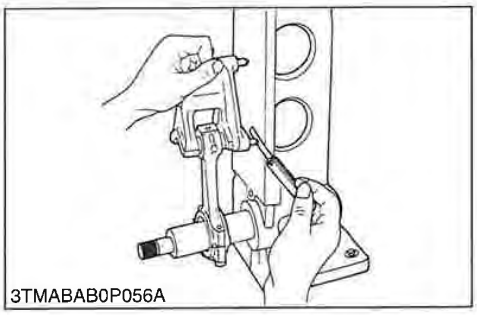
3TMABAB0P056A

Connecting Rod Alignment

1. Remove the crankpin bearing, and install the connecting rod cap.
2. Install the piston pin in the connecting rod.
3. Install the connecting rod on the connecting rod alignment tool.
4. Put a gauge over the piston pin, and move it against the face plate.
5. If the gauge does not fit squarely against the face plate, measure the space between the pin of the gauge and the face plate.
6. If the measurement exceeds the allowable limit, replace the connecting rod.

Space between gauge pin face plate	Allowable limit	0.05 mm 0.002 in.

9Y1210318ENS0113US0

Petitioner MWE Investments, LLC, et al.
Exhibit 1003, Page 937

(4) Crankshaft

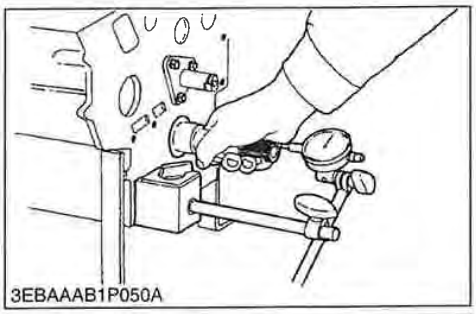
3EBAAAB1P050A

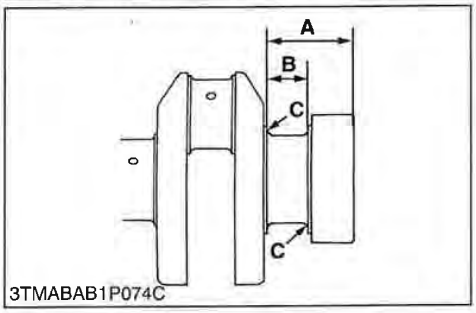

3TMABAB1P074C

Crankshaft Side Clearance

1. Set a dial indicator with its tip on the end of the crankshaft.
2. Measure the side clearance by moving the crankshaft to the front and rear.
3. If the measurement exceeds the allowable limit, replace the thrust bearings.
4. If the same size bearing is useless because of the crankshaft journal wear, replace it with an oversize one referring to the table and figure.

Crankshaft side clearance	Factory spec.	0.15 to 0.31 mm 0.0059 to 0.012 in.
	Allowable limit	0.50 mm 0.020 in.

(Reference)

- Oversize thrust bearing

Oversize	Bearing	Code Number	Marking
0.2 mm 0.008 in.	Thrust bearing 1 02	15261-23950	020 OS
	Thrust bearing 2 02	15261-23970	020 OS
0.4 mm 0.02 in.	Thrust bearing 1 04	15261-23960	040 OS
	Thrust bearing 2 04	15261-23980	040 OS

- Oversize dimensions of crankshaft journal

Oversize	0.2 mm 0.008 in.	0.4 mm 0.02 in.
Dimension **A**	46.10 to 46.30 mm 1.815 to 1.822 in.	46.30 to 46.50 mm 1.823 to 1.830 in.
Dimension **B**	23.40 to 23.45 mm 0.9213 to 0.9232 in.	23.60 to 23.65 mm 0.9292 to 0.9311 in.
Dimension **C**	1.8 to 2.2 mm radius 0.071 to 0.086 in. radius	1.8 to 2.2 mm radius 0.071 to 0.086 in. radius
The crankshaft journal must be fine-finished to higher than Rmax = 0.8S		

9Y1210318ENS0114US0

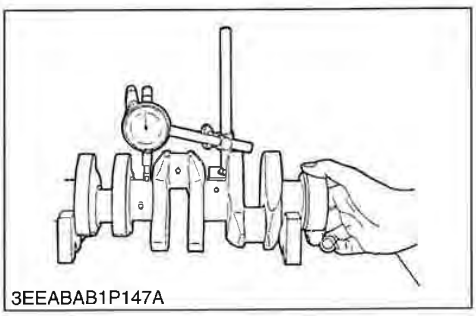
3EEABAB1P147A

Crankshaft Alignment

1. Support the crankshaft with V blocks on the surface plate at both end journals.
2. Set a dial indicator with its tip on the intermediate journal.
3. Measure the crankshaft alignment.
4. If the measurement exceeds the allowable limit, replace the crankshaft.

Crankshaft alignment	Allowable limit	0.02 mm 0.0008 in.

9Y1210318ENS0115US0

Petitioner MWE Investments, LLC, et al.
Exhibit 1003, Page 938

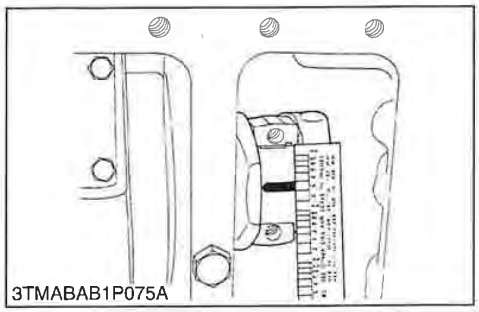
3TMABAB1P075A

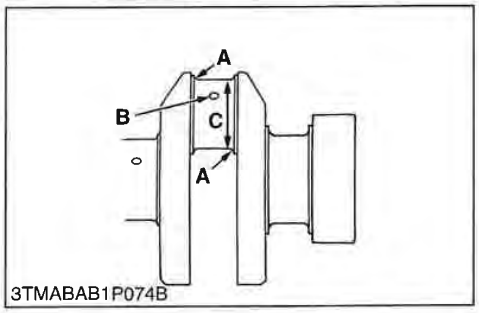

3TMABAB1P074B

Oil Clearance between Crankpin and Crankpin Bearing

1. Clean the crankpin and crankpin bearing.
2. Put a strip of plastigage on the center of the crankpin.
3. Install the connecting rod cap and tighten the connecting rod screws to the specified torque, and remove the cap again.
4. Measure the amount of the flattening with the scale, and get the oil clearance.
5. If the oil clearance exceeds the allowable limit, replace the crankpin bearing.
6. If the same size bearing is useless because of the crankpin wear, replace it with an undersize one referring to the table and figure.

■ **NOTE**

- **Never insert the plastigage into the crankpin oil hole.**
- **Be sure not to move the crankshaft while the connecting rod screws are tightened.**

Oil clearance between crankpin and crankpin bearing	Factory spec.	0.020 to 0.051 mm 0.00079 to 0.0020 in.
	Allowable limit	0.15 mm 0.0059 in.

Crankpin O.D.	Factory spec.	33.959 to 33.975 mm 1.3370 to 1.3375 in.
Crankpin bearing I.D.	Factory spec.	33.995 to 34.010 mm 1.3384 to 1.3389 in.

(Reference)

- Undersize crankpin bearing

Undersize	Bearing	Code Number	Marking
0.2 mm 0.008 in.	Crankpin bearing 02	15861-22970	020 US
0.4 mm 0.02 in.	Crankpin bearing 04	15861-20980	040 US

- Undersize dimensions of crankpin

Undersize	0.2 mm 0.008 in.	0.4 mm 0.02 in.
Dimension **A**	2.3 to 2.7 mm radius 0.091 to 0.10 in. radius	2.3 to 2.7 mm radius 0.091 to 0.10 in. radius
*Dimension **B**	1.0 to 1.5 mm relief 0.040 to 0.059 in. relief	1.0 to 1.5 mm relief 0.040 to 0.059 in. relief
Dimension **C**	33.759 to 33.775 mm dia. 1.3291 to 1.3297 in. dia.	33.559 to 33.575 mm dia. 1.3213 to 1.3218 in. dia.
The crankpin journal must be fine-finished to higher than Rmax = 0.8S *Holes to be de-burred and edges rounded with 1.0 to 1.5 mm (0.040 to 0.059 in.) relief.		

9Y1210318ENS0116US0

Petitioner MWE Investments, LLC, et al.
Exhibit 1003, Page 939

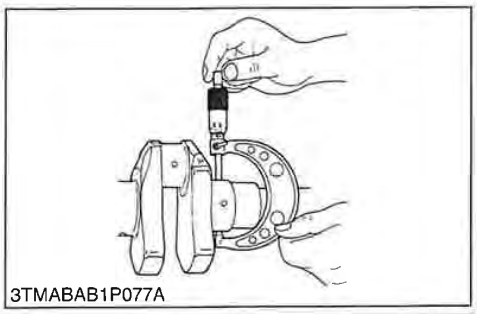
3TMABAB1P077A

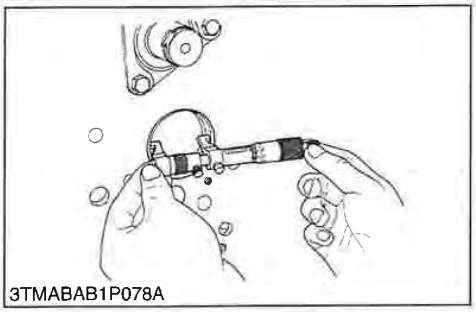
3TMABAB1P078A

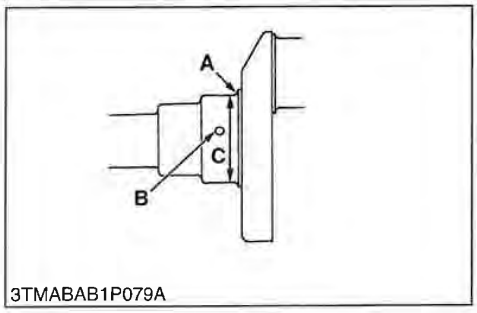

3TMABAB1P079A

Oil Clearance between Crankshaft Journal and Crankshaft Bearing 1

1. Measure the O.D. of the crankshaft front journal with an outside micrometer.
2. Measure the I.D. of the crankshaft bearing 1 with an inside micrometer, and calculate the oil clearance.
3. If the oil clearance exceeds the allowable limit, replace the crankshaft bearing 1.
4. If the same size bearing is useless because of the crankshaft journal wear, replace it with an undersize one referring to the table and the figure.

Oil Clearance between crankshaft journal and crankshaft bearing 1	Factory spec.	0.0340 to 0.106 mm 0.00134 to 0.00417 in.
	Allowable limit	0.20 mm 0.0079 in.

Crankshaft journal O.D.	Factory spec.	43.934 to 43.950 mm 1.7297 to 1.7303 in.
Crankshaft bearing 1 I.D.	Factory spec.	43.984 to 44.040 mm 1.7317 to 1.7338 in.

(Reference)

- Undersize crankshaft bearing 1

Undersize	Bearing	Code Number	Marking
0.2 mm 0.008 in.	Crankshaft bearing 1 02	1G460-23910	020 US
0.4 mm 0.02 in.	Crankshaft bearing 1 04	1G460-23920	040 US

- Undersize dimensions of crankshaft journal

Undersize	0.2 mm 0.008 in.	0.4 mm 0.02 in.
Dimension **A**	1.8 to 2.2 mm radius 0.071 to 0.086 in. radius	1.8 to 2.2 mm radius 0.071 to 0.086 in. radius
*Dimension **B**	1.0 to 1.5 mm relief 0.040 to 0.059 in. relief	1.0 to 1.5 mm relief 0.040 to 0.059 in. relief
Dimension **C**	43.734 to 43.750 mm dia. 1.7219 to 1.7224 in. dia.	43.534 to 43.550 mm dia. 1.7140 to 1.7145 in. dia.
The crankshaft journal must be fine-finished to higher than Rmax = 0.8S *Holes to be de-burred and edges rounded with 1.0 to 1.5 mm (0.040 to 0.059 in.) relief.		

9Y1210318ENS0117US0

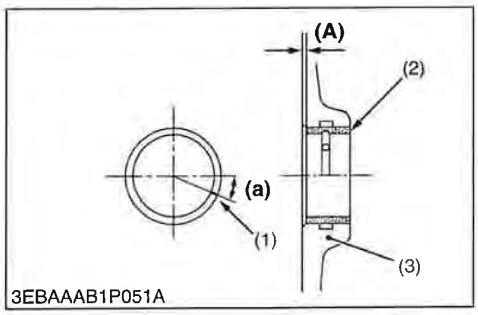

3EBAAAB1P051A

Replacing Crankshaft Bearing 1

(When removing)

1. Press out the used crankshaft bearing 1 using a crankshaft bearing 1 replacing tool.

(When installing)

1. Clean a new crankshaft bearing 1 and crankshaft journal bore, and apply engine oil to them.
2. Using a crankshaft bearing 1 replacing tool, press in a new bearing 1 (2) so that its seam (1) directs toward the exhaust manifold side. (See figure.)

Dimension **(A)**	Factory spec.	0 to 0.3 mm 0 to 0.01 in.

(1) Seam
(2) Crankshaft Bearing 1
(3) Cylinder Block

(A) Dimension
(a) 0.37 rad (21 °)

9Y1210318ENS0118US0

Petitioner MWE Investments, LLC, et al.
Exhibit 1003, Page 940

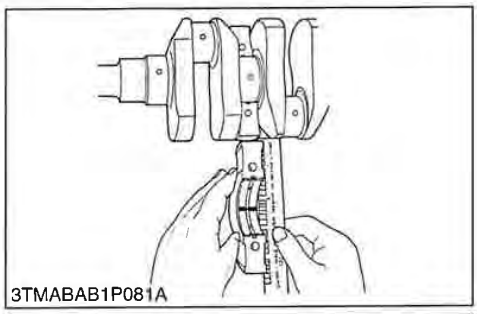
3TMABAB1P081A

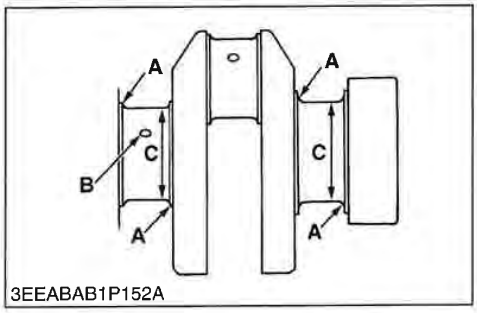

3EEABAB1P152A

Oil Clearance between Crankshaft Journal and Crankshaft Bearing 2 (Crankshaft Bearing 3)

1. Put a strip of plastigage on the center of the journal.
2. Install the bearing case and tighten the bearing case screws 1 to the specified torque, and remove the bearing case again.
3. Measure the amount of the flattening with the scale, and get the oil clearance.
4. If the oil clearance exceeds the allowable limit, replace the crankshaft bearing 2 (crankshaft bearing 3).
5. If the same size bearing is useless because of the crankshaft journal wear, replace it with an undersize one referring to the table and figure.

■ **NOTE**

- **Be sure not to move the crankshaft while the bearing case screws are tightened.**

Oil clearance between crankshaft journal and crankshaft bearing 2 (crankshaft bearing 3)	Factory spec.	0.028 to 0.059 mm 0.0011 to 0.0023 in.
	Allowable limit	0.20 mm 0.0079 in.

Crankshaft journal O.D. (Flywheel side)	Factory spec.	43.934 to 43.950 mm 1.7297 to 1.7303 in.
Crankshaft bearing 2 I.D.	Factory spec.	43.978 to 43.993 mm 1.7315 to 1.7320 in.

Crankshaft journal O.D. (Intermediate)	Factory spec.	43.934 to 43.950 mm 1.7297 to 1.7303 in.
Crankshaft bearing 3 I.D.	Factory spec.	43.978 to 43.993 mm 1.7315 to 1.7320 in.

(Reference)

- Undersize crankshaft bearing 2 and 3

Undersize	Bearing	Code Number	Marking
0.2 mm 0.008 in.	Crankshaft bearing 2 02	15694-23930	020 US
	Crankshaft bearing 2F 02	1G460-07530	
	Crankshaft bearing 3 02	1G460-07580	020 US
	Crankshaft bearing 3F 02	1G460-07630	
0.4 mm 0.02 in.	Crankshaft bearing 2 04	15694-23940	040 US
	Crankshaft bearing 2F 04	1G460-07540	
	Crankshaft bearing 3 04	1G460-07590	040 US
	Crankshaft bearing 3F 04	1G460-07640	

- Undersize dimensions of crankshaft journal

Undersize	0.2 mm 0.008 in.	0.4 mm 0.02 in.
Dimension **A**	1.8 to 2.2 mm radius 0.071 to 0.086 in. radius	1.8 to 2.2 mm radius 0.071 to 0.086 in. radius
*Dimension **B**	1.0 to 1.5 mm relief 0.040 to 0.059 in. relief	1.0 to 1.5 mm relief 0.040 to 0.059 in. relief
Dimension **C**	43.734 to 43.750 mm dia. 1.7219 to 1.7224 in. dia.	43.534 to 43.550 mm dia. 1.7140 to 1.7145 in. dia.
The crankshaft journal must be fine-finished to higher than Rmax = 0.8S *Holes to be de-burred and edges rounded with 1.0 to 1.5 mm (0.040 to 0.059 in.) relief.		

9Y1210318ENS0119US0

Petitioner MWE Investments, LLC, et al.
Exhibit 1003, Page 941

(5) Cylinder

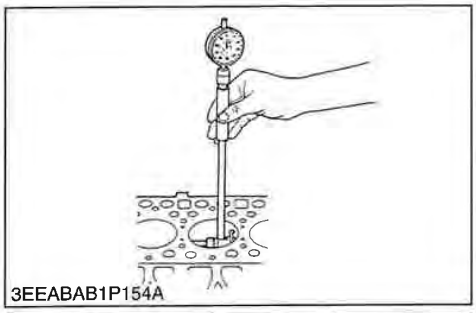
3EEABAB1P154A

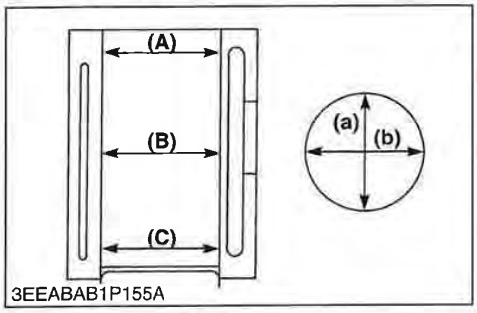

3EEABAB1P155A

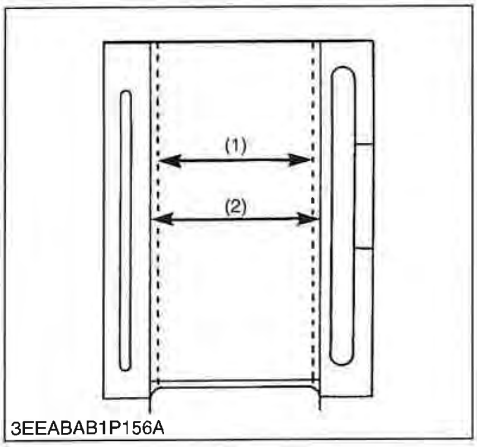

3EEABAB1P156A

Cylinder Wear

1. Measure the I.D. of the cylinder at the six positions (see figure) with a cylinder gauge to find the maximum and minimum I.D.'s.
2. Get the difference (Maximum wear) between the maximum and the minimum I.D.'s.

Cylinder I.D.	Factory spec.	74.500 to 74.519 mm 2.9331 to 2.9338 in.
	Allowable limit	74.669 mm 2.9397 in.

(A) Top
(B) Middle
(C) Bottom (Skirt)

(a) Right-Angled to Piston Pin
(b) Piston Pin Direction

9Y1210318ENS0120US0

Correcting Cylinder (Oversize)

1. When the cylinder is worn beyond the allowable limit, bore and hone it to the specified dimension.

Cylinder liner I.D.	Factory spec.	75.000 to 75.019 mm 2.9528 to 2.9535 in.
	Allowable limit	75.150 mm 2.9587 in.
Finishing	Hone to 2.2 to 3.0 μmRz (0.000087 to 0.00011 in.Rz)	

2. Replace the piston and piston rings with oversize ones.
   Oversize : 0.5 mm (0.02 in.)
   Marking : 05

■ **NOTE**

- **When the oversize cylinder is worn beyond the allowable limit, replace the cylinder block with a new one.**

(1) Cylinder I.D. (Before Correction) (2) Cylinder I.D. (Oversize)

9Y1210318ENS0121US0

Petitioner MWE Investments, LLC, et al.
Exhibit 1003, Page 942

(6) Oil Pump

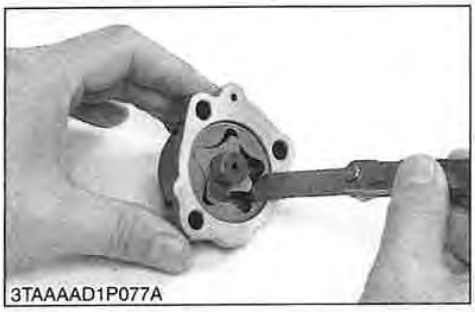
3TAAAAD1P077A

Rotor Lobe Clearance

1. Measure the clearance between lobes of the inner rotor and the outer rotor with a thickness gauge.
2. If the clearance exceeds the factory specifications, replace the oil pump rotor assembly.

Rotor lobe clearance	Factory spec.	0.030 to 0.14 mm 0.0012 to 0.0055 in.

9Y1210318ENS0122US0

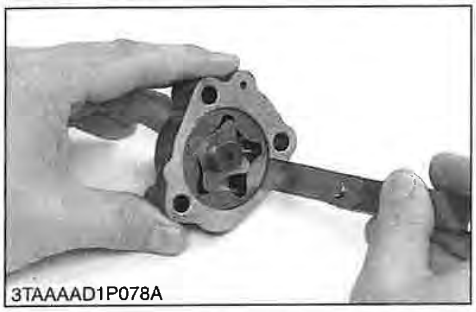
3TAAAAD1P078A

Clearance between Outer Rotor and Pump Body

1. Measure the clearance between the outer rotor and the pump body with a thickness gauge.
2. If the clearance exceeds the factory specifications, replace the oil pump rotor assembly.

Clearance between outer rotor and pump body	Factory spec.	0.070 to 0.15 mm 0.0028 to 0.0059 in.

9Y1210318ENS0123US0

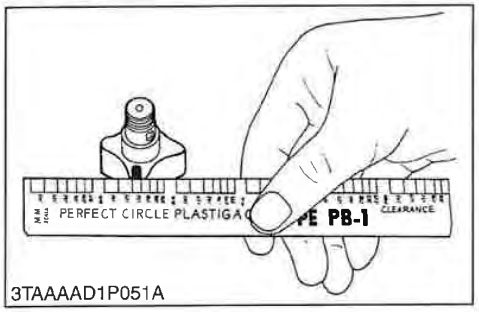

3TAAAAD1P051A

Clearance between Rotor and Cover

1. Put a strip of plastigage onto the rotor face with grease.
2. Install the cover and tighten the screws.
3. Remove the cover carefully, and measure the amount of the flattening with the scale and get the clearance.
4. If the clearance exceeds the factory specifications, replace oil pump rotor assembly.

Clearance between rotor and cover	Factory spec.	0.0750 to 0.135 mm 0.00296 to 0.00531 in.

9Y1210318ENS0124US0

Petitioner MWE Investments, LLC, et al.
Exhibit 1003, Page 943

(7) Starter

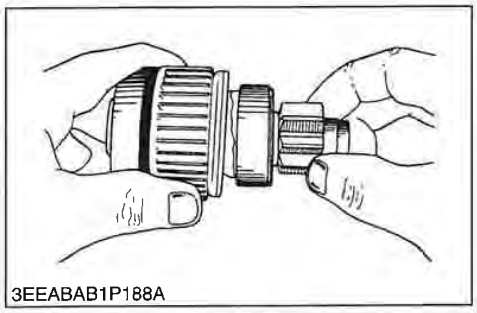
3EEABAB1P188A

Overrunning Clutch

1. Inspect the pinion for wear or damage.
2. If there is any defect, replace the overrunning clutch assembly.
3. Check that the pinion turns freely and smoothly in the overrunning direction and does not slip in the cranking direction.
4. If the pinion slips or does not rotate in the both directions, replace the overrunning clutch assembly.

9Y1210318ENS0125US0

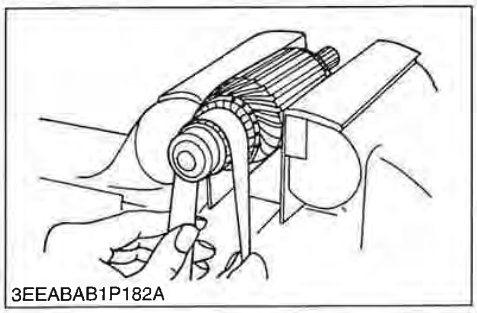
3EEABAB1P182A

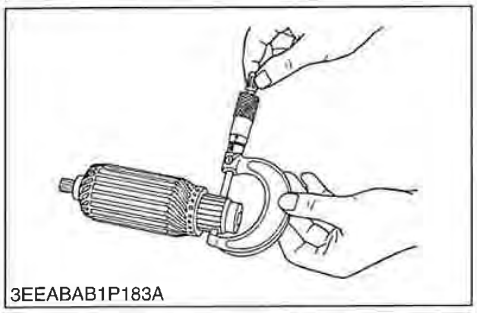
3EEABAB1P183A

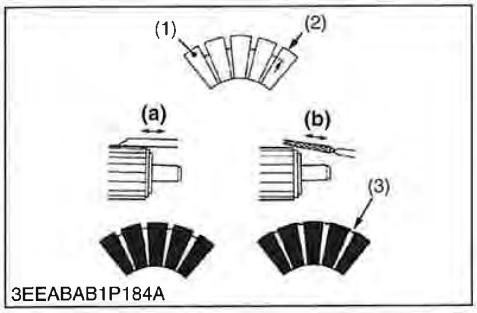

3EEABAB1P184A

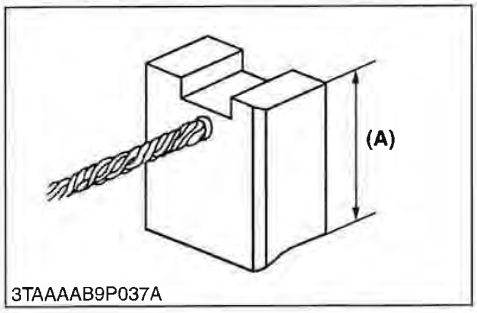

3TAAAAB9P037A

Commutator and Mica

1. Check the contact face of the commutator for wear, and grind the commutator with emery paper if it is slightly worn.
2. Measure the commutator O.D. with an outside micrometer at several points.
3. If the minimum O.D. is less than the allowable limit, replace the armature.
4. If the difference of the O.D.'s exceeds the allowable limit, correct the commutator on a lathe to the factory specification.
5. Measure the mica undercut.
6. If the undercut is less than the allowable limit, correct if with a saw blade and chamfer the segment edges.

Commutator O.D.	Factory spec.	28.0 mm 1.10 in.
	Allowable limit	27.0 mm 1.06 in.
Difference of O.D.'s	Factory spec.	Less than 0.05 mm 0.002 in.
	Allowable limit	0.4 mm 0.02 in.
Mica under cut	Factory spec.	0.45 to 0.75 mm 0.018 to 0.029 in.
	Allowable limit	0.2 mm 0.008 in.

(1) Segment
(2) Undercut
(3) Mica

(a) Good
(b) Bad

9Y1210318ENS0126US0

Brush Wear

1. If the contact face of the brush is dirty or dusty, clean it with emery paper.
2. Measure the brush length **(A)** with vernier calipers.
3. If the length is less than the allowable limit, replace the yoke assembly and brush holder.

Brush length **(A)**	Factory spec.	14.0 mm 0.551 in.
	Allowable limit	11.1 mm 0.437 in.

(A) Brush Length

9Y1210318ENS0127US0

Petitioner MWE Investments, LLC, et al.
Exhibit 1003, Page 944

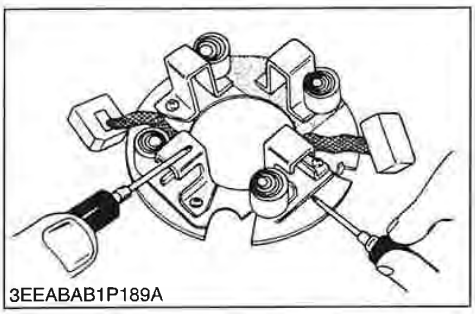
3EEABAB1P189A

Brush Holder

1. Check the continuity across the brush holder and the holder support with an ohmmeter.
2. If it conducts, replace the brush holder.

9Y1210318ENS0128US0

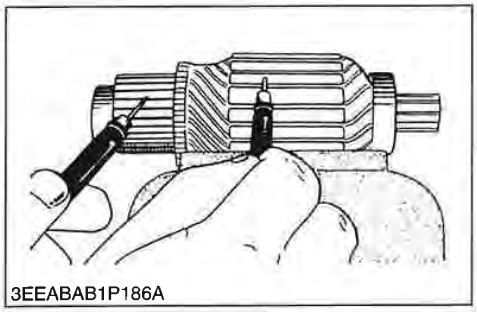
3EEABAB1P186A

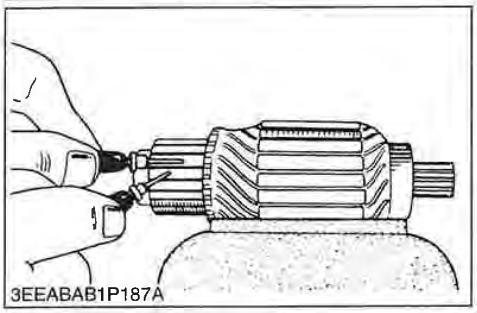
3EEABAB1P187A

Armature Coil

1. Check the continuity across the commutator and armature coil core with an ohmmeter.
2. If it conducts, replace the armature.
3. Check the continuity across the segments of the commutator with an ohmmeter.
4. If it does not conduct, replace the armature.

9Y1210318ENS0129US0

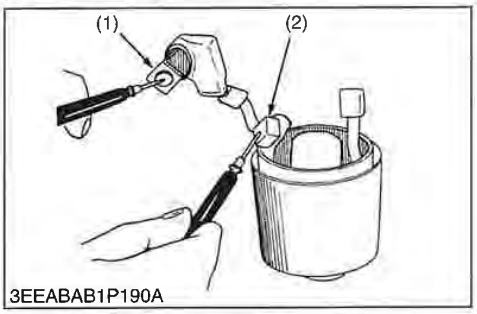

3EEABAB1P190A

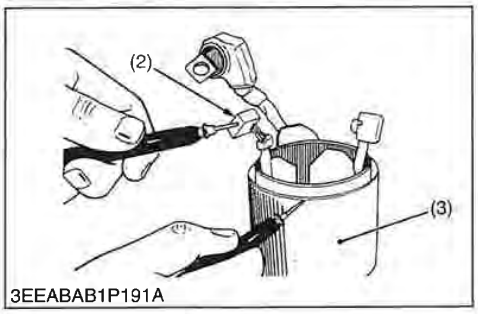

3EEABAB1P191A

Field Coil

1. Check the continuity across the lead (1) and brush (2) with an ohmmeter.
2. If it does not conduct, replace the yoke assembly.
3. Check the continuity across the brush (2) and yoke (3) with an ohmmeter.
4. If it conducts, replace the yoke assembly.

(1) Lead
(2) Brush
(3) Yoke

9Y1210318ENS0130US0

Petitioner MWE Investments, LLC, et al.
Exhibit 1003, Page 945

(8) Alternator

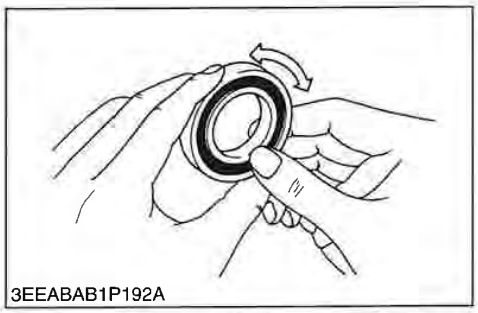
3EEABAB1P192A

Bearing

1. Check the bearing for smooth rotation.
2. If it does not rotate smoothly, replace it.

9Y1210318ENS0131US0

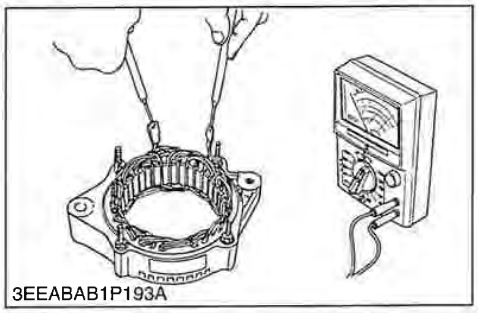
3EEABAB1P193A

Stator

1. Measure the resistance across each lead of the stator coil with resistance range of circuit tester.
2. If the measurement is not within factory specification, replace it.
3. Check the continuity across each stator coil lead and core with resistance range of circuit tester.
4. If infinity is not indicated, replace it.

Resistance	Factory spec.	Less than 1.0 Ω

9Y1210318ENS0132US0

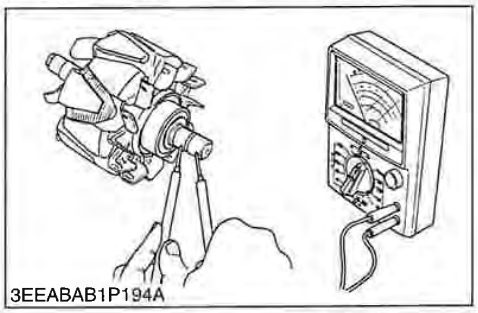
3EEABAB1P194A

Rotor

1. Measure the resistance across the slip rings.
2. If the resistance is not the factory specification, replace it.
3. Check the continuity across the slip ring and core with resistance range of circuit tester.
4. If infinity is not indicated, replace it.

Resistance	Factory spec.	2.9 Ω

9Y1210318ENS0133US0

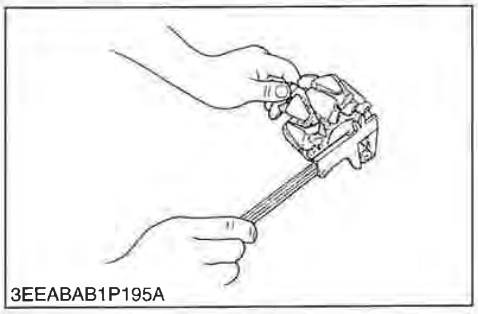
3EEABAB1P195A

Slip Ring

1. Check the slip ring for score.
2. If scored, correct with an emery paper or on a lathe.
3. Measure the O.D. of slip ring with vernier calipers.
4. If the measurement is less than the allowable limit, replace it.

Slip ring O.D.	Factory spec.	14.4 mm 0.567 in.
	Allowable limit	14.0 mm 0.551 in.

9Y1210318ENS0134US0

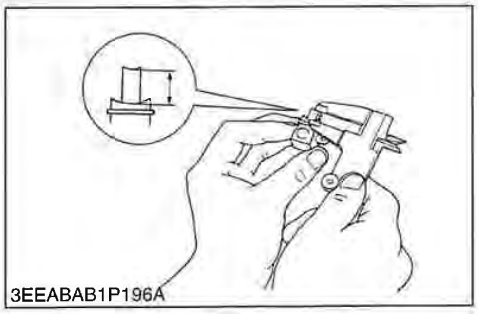
3EEABAB1P196A

Brush Wear

1. Measure the brush length with vernier calipers.
2. If the measurement is less than allowable limit, replace it.
3. Make sure that the brush moves smoothly.
4. If the brush is defective, replace it.

Brush length	Factory spec.	10 5 mm 0.413 in.
	Allowable limit	8.4 mm 0.33 in.

9Y1210318ENS0135US0

Petitioner MWE Investments, LLC, et al.
Exhibit 1003, Page 946

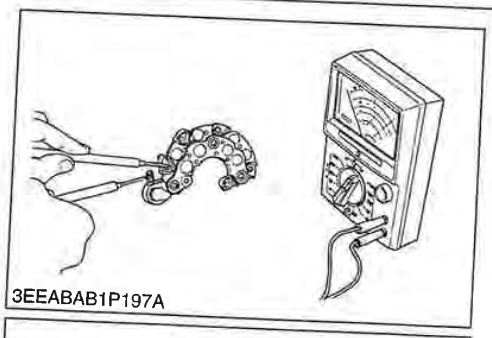

3EEABAB1P197A

Rectifier

1. Check the continuity across each diode of rectifier with resistance range of circuit tester.
2. The rectifier is normal if the diode in the rectifier conducts in one direction and does not conduct in the reverse direction.

9Y1210318ENS0136US0

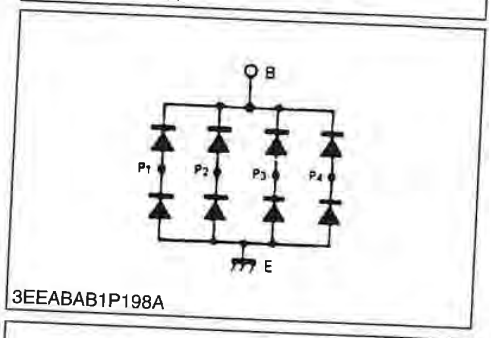

3EEABAB1P198A

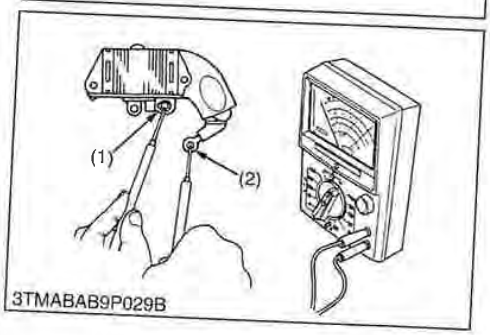

3TMABAB9P029B

IC Regulator

1. Check the continuity across the **B** terminal (2) and the **F** terminal (1) of IC regulator with resistance range of circuit tester.
2. The IC regulator is normal if the conducts in one direction and does not conduct in the reverse direction.

(1) **F** Terminal

(2) **B** Terminal

9Y1210318ENS0137US0

EDITOR:
KUBOTA FARM & INDUSTRIAL MACHINERY SERVICE, LTD.
64, ISHIZU-KITAMACHI, SAKAI-KU, SAKAI-CITY, OSAKA, 590-0823, JAPAN
PHONE : (81)72-241-1129
FAX : (81)72-245-2484
E-mail : ksos-pub@kubota.co.jp

KUBOTA Corporation

Printed in Japan 2009. 06, S, EI, E I, e
2009. 02, S, EI, E I, e

Code No.9Y111-03180

EXHIBIT 1011

I, Scott Schlabach, declare and state as follows:

1. I have been the General Manager of Country Sales and Service LLC in Orrville, Ohio since October 1996.

2. Country Sales and Service has been an authorized Kubota engine service center since 1996.

3. As part of my duties at Country Sales and Service since 1996, I have worked on Kubota engines, including the Kubota DF972 engine, and am familiar with Kubota's distribution of manuals for its engines, including manuals for the DF972 engine.

4. It is my understanding Kubota has been selling the DF972 engine since at least 2004. This is consistent with my memory.

5. I do not recall when I first worked on a DF972 engine, but it certainly would have been prior to 2010. I have worked on DF972 engines consistently since then, such work encompassing sales, distribution, servicing, repairs, resale, attending training classes, training others, etc. I estimate I worked on and/or sold over 100 Kubota DF972 engines prior to 2015.

6. Since the inception of the DF972 engine, Kubota has produced and maintained both an Operators Manual and a Workshop/Service Manual covering the DF972 engine. I have reviewed and used these manuals consistently as part of

my work on DF972 engines, and am familiar with their contents, including the manuals distributed prior to 2015.

7. Both manuals were public documents and were known to exist by operators, service centers, repair personnel, and purchasers.

8. It has been the standard practice of Kubota, including prior to 2015, to include a paper copy of the Operators Manual with each DF972 engine sold. This copy is sent with the engine to the end-purchasers.

9. It has always been the standard practice of Kubota to make the Workshop Manual available to authorized service centers, such as Country Sales and Service. Today, an authorized service center can download the applicable Workshop Manual through a Kubota web portal. Prior to the implementation of the web portal, Kubota would provide the Workshop Manual to an authorized service center via shipment (paper copy) or e-mail (PDF), upon request. I do not recall exactly when Kubota switched from providing the Workshop Manual by mail or e-mail, to providing it via their web portal, but believe it was in 2008 or 2009.

10. Neither the Operator Manual nor the Workship Manual is marked as confidential, and Kubota imposed no restrictions of confidentiality on either manual. During the duration of my work on Kubota engines since 1996, I have never understood any Kubota manual to be considered confidential by Kubota. I

do not recall ever receiving any communication from Kubota indicating the manuals should be treated as confidential.

11. Given the above, I did not treat the Workshop Manual as confidential. Customers of the Kubota DF972 engine were aware of the existence of the Workshop Manual, and would sometimes ask questions about it. I was free to convey the information in the Workshop Manual to people who inquired. I can also recall on many occasions scanning and sending relevant portions of the Workshop Manual to customers who requested it.

12. Attached as Exhibit 1 is an Operator Manual for the Kubota DF972 engine, showing a date of 2014. It was the standard practice for Kubota to include the current version of this manual with each DF972 engine sold, and this manual was sent to the purchasers of the DF972 engine in 2014.

13. Attached as Exhibit 2 is a Workshop Manual for the Kubota DF972 engine, showing a date of 2009. In 2009, it was standard practice for Kubota to send a copy of the applicable version of this manual to authorized service centers, such as Country Sales and Service, upon request. It was also the standard practice for Kubota to make this manual available for download by authorized service centers once Kubota implemented its web portal. This manual would have been available sometime in 2009 and thereafter. Country Sales and Service would have

obtained a copy of the Workshop Manual (attached as Exhibit 2) as needed to make repairs on and service DF972 engines.

14. Attached as Exhibit 3 is the updated version of the 2009 Workshop Manual (Exhibit 2), which I downloaded from Kubota's web portal on March 31, 2025.

15. I declare that all statements made herein of my own knowledge are true and that all statements made upon information and belief are believed to be true, and further that these statements were made with the knowledge that willful false statements and the like so made are punishable by fine or imprisonment, or both, under Section 1001 of Title 18 of the United States Code.

Executed on 04/14/2025 Scott Schlabach

EXHIBIT 1

KUBOTA

U.S.A. : **KUBOTA ENGINE AMERICA CORPORATION**
505 Schelter Road, Lincolnshire, Illinois 60069 U.S.A.
Telephone : (847)955-2500

Canada : **KUBOTA CANADA LTD.**
5900 14th Avenue, Markham, Ontario, L3S 4K4, Canada
Telephone : (905)294-7477

France : **KUBOTA EUROPE S.A.S**
19-25, Rue Jules Vercruysse, Z.I. BP88, 95101 Argenteuil Cedex, France
Telephone : (33)1-3426-3434

Italy : **KUBOTA EUROPE S.A.S Italy Branch**
Via Grandi, 29 20068 Peschiera Borrome (MI) Italy
Telephone : (39)02-51650377

Germany : **KUBOTA (DEUTSCHLAND) GmbH**
Senefelder Str. 3-5 63110 Rodgau /Nieder-Roden, Germany
Telephone : (49)6106-873-0

U.K. : **KUBOTA (U.K.) LTD.**
Dormer Road, Thame, Oxfordshire, OX9 3UN, U.K.
Telephone : (44)1844-214500

Australia : **KUBOTA AUSTRALIA PTY LTD.**
25-29 Permas Way, Truganina, VIC 3029, Australia
Telephone : (61)-3-9394-4400

Malaysia : **KUBOTA MALAYSIA SDN. BHD.**
Lot 766, Jalan Subang 4, off Persiaran Subang Sungai Penaga Industrial Park,
47500 Subang Jaya
Telephone : (60)-3-7890-3533

Philippines : **KUBOTA PHILIPPINES, INC.**
232 Quirino Highway, Baesa, Quezon City 1106, Philippines
Telephone : (63)2-422-3500

Indonesia : **P.T. KUBOTA INDONESIA**
Taman Industri Bukit Semarang Baru(BSB) Blok D.1 Kav.8, Kel. Jatibarang-
Kec.Mijen, Semarang, Indonesia
Telephone : (62)-24-7472849

Japan : **KUBOTA Corporation**
Engine Export Dept.
2-47, Shikitsuhigashi 1-chome, Naniwa-ku, Osaka, Japan 556-8601
Telephone : (81)6-6648-2155 Fax : (81)6-6648-3521

Code No. EG561-8926-4

WG972-E2·DF972-E2

OPERATOR'S MANUAL
KUBOTA LIQUID COOLED GASOLINE/LPG ENGINE

MANUEL DE L'OPERATEUR
MOTEUR À ESSENCE/LPG REFROIDI PAR LIQUIDE DE KUBOTA

BEDIENUNGSANLEITUNG
FLÜSSIGKEITSGEKÜHLTER BENZIN-/LPG-MOTOR VON KUBOTA

MANUALE DELL'OPERATORE
MOTORE KUBOTA A BENZINA/LPG CON RAFFREDDAMENTO A LIQUIDO

MANUAL DE INSTRUCCIONES
MOTOR KUBOTA DE GASOLINA/LPG REFRIGERADO POR LÍQUIDO

ENGLISH

FRANÇAIS

DEUTSCH

ITALIANO

ESPAÑOL

WG972-E2·DF972-E2

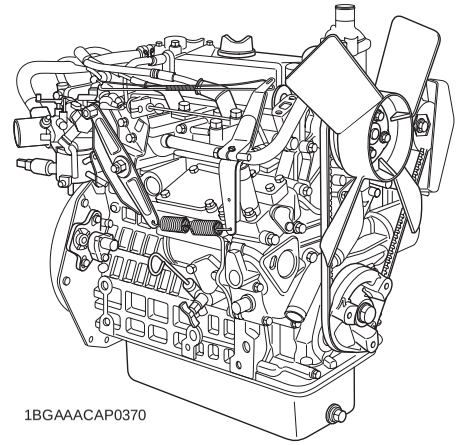

1BGAAACAP0370

READ AND SAVE THIS BOOK
MANUEL A LIRE ET A CONSERVER
DIESE ANLEITUNG BITTE SORGFÄLTIG DURCHLESEN
UND GRIFFBEREIT AUFBEWAHREN
LEGGETE E CONSERVATE QUESTO MANUALE
LEAN Y CONSERVEN ESTE MANUAL

Kubota

PRINTED IN JAPAN

© KUBOTA Corporation 2014

PRINTED WITH SOY INK

Petitioner MWE Investments, LLC, et al.
Exhibit 1003, Page 955

California Proposition 65

⚠ WARNING ⚠

Engine exhaust, some of its constituents, certain vehicle components and fluids, contain or emit chemicals known to the State of California to cause cancer and birth defects or other reproductive harm.

Petitioner MWE Investments, LLC, et al.
Exhibit 1003, Page 956

ENGLISH

OPERATOR'S MANUAL

KUBOTA

LIQUID COOLED GASOLINE/LPG ENGINE

MODELS WG972-E2 · DF972-E2

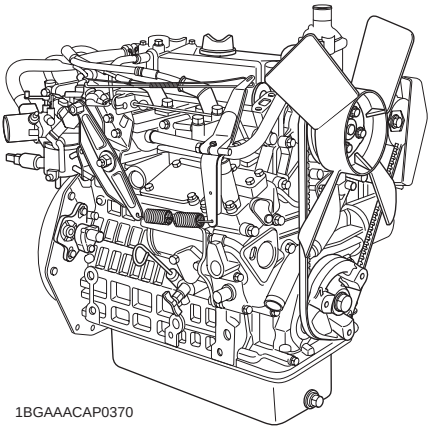

1BGAAACAP0370

READ AND SAVE THIS BOOK

Kubota

Petitioner MWE Investments, LLC, et al.
Exhibit 1003, Page 957

ENGLISH

FOREWORD

You are now the proud owner of a KUBOTA Engine. This engine is a product of KUBOTA quality engineering and manufacturing. It is made of fine materials and under a rigid quality control system. It will give you long, satisfactory service. To obtain the best use of your engine, please read this manual carefully. It will help you become familiar with the operation of the engine and contains many helpful hints about engine maintenance. It is KUBOTA's policy to utilize as quickly as possible every advance in our research. The immediate use of new techniques in the manufacture of products may cause some small parts of this manual to be outdated. KUBOTA distributors and dealers will have the most up-to-date information. Please do not hesitate to consult with them.

This Operator's Manual should be considered a permanent part of the engine and should remain with the engine when it is resold.

SAFETY FIRST

This symbol, the industry's "Safety Alert Symbol", is used throughout this manual and on labels on the machine itself to warn of the possibility of personal injury. Read these instructions carefully. It is essential that you read the instructions and safety regulations before you attempt to assemble or use this unit.

DANGER :	Indicates an imminently hazardous situation which, if not avoided, will result in death or serious injury.
WARNING :	Indicates a potentially hazardous situation which, if not avoided, could result in death or serious injury.
CAUTION :	Indicates a potentially hazardous situation which, if not avoided, could result in minor or moderate injury.
IMPORTANT :	Indicates that equipment or property damage could result if instructions are not followed.
NOTE :	Gives helpful information.

ENGLISH

CONTENTS

⚠SAFE OPERATION 1

SERVICING THE ENGINE 1

IMPORTANT INFORMATION OF EMISSION REGULATION 2

NAMES OF PARTS 3

PRE-OPERATION CHECK 4
- BREAK-IN 4
- DAILY CHECK 4

OPERATING THE ENGINE 5
- STARTING THE ENGINE (NORMAL) 5
- STOPPING THE ENGINE 8
- CHECKS DURING OPERATION 9
  - Radiator cooling water (Coolant) 9
  - Oil pressure lamp 9
  - Immediately stop the engine if; 9
- TAMPER RESISTANCE 9
  - Carburetor [WG972-E2], Dual fuel carburetor [DF972-E2] 9
  - Sensor (crank angle) 9
  - LPG regulator [DF972-E2] 10

MAINTENANCE 11
- SERVICE INTERVALS 12

PERIODIC SERVICE 16
- FUEL 16
  - Gasoline 16
  - Fuel level check and refueling 16
  - Checking the fuel pipes 16
  - LPG 16
  - LPG leakage check 16
  - LPG fuel tank check 16
  - LPG regulator check 17
- ENGINE OIL 17
  - Checking oil level and adding engine oil 17
  - Changing engine oil 18
  - Replacing the oil filter cartridge 18
- RADIATOR 19
  - Checking coolant level, adding coolant 19
  - Changing coolant 20
  - Remedies for quick decrease of coolant 20
  - Checking radiator hoses and clamp bands 20
  - Precaution at overheating 20
  - Cleaning radiator core (outside) 20
  - Anti-freeze 21
- AIR CLEANER 22
  - Cleaning primary air cleaner element 22
  - Evacuator valve 22
  - For the air cleaner with a dust cup (optional) 22
  - Dust indicator (optional) 23

ENGLISH

CONTENTS

FUEL SYSTEM AND DIAGRAMS 24
LPG fuel system 24
Tightening torques and leak check for LPG regulator with vaporizer 24
Fuel system diagrams 25
ELECTRIC WIRING 26
FAN BELT 26
Adjusting fan belt tension 26
CARRIAGE AND STORAGE 27
CARRIAGE 27
STORAGE 27
TROUBLESHOOTING 28
SPECIFICATIONS 31

SAFE OPERATION

Careful operation is your best assurance against an accident. Read and understand this section carefully before operating the engine. All operators, no matter how much experience they may have, should read this and other related manuals before operating the engine or any equipment attached to it. It is the owner's obligation to provide all operators with this information and instruct them on safe operation.

Observe the following for safe operation.

1. OBSERVE SAFETY INSTRUCTIONS

- Read and understand carefully this "OPERATOR'S MANUAL" and "LABELS ON THE ENGINE" before attempting to start and operate the engine.
- Learn how to operate and work safely. Know your equipment and its limitations. Always keep the engine in good condition.
- Before allowing other people to use your engine, explain how to operate and have them read this manual before operation.
- DO NOT modify the engine. UNAUTHORIZED MODIFICATIONS to the engine may impair the function and/or safety and affect engine life. If the engine does not perform properly, consult your local Kubota Engine Distributor first.

1AAACAAAP008B

2. WEAR SAFE CLOTHING AND PERSONAL PROTECTIVE EQUIPMENT (PPE)

- DO NOT wear loose, torn or bulky clothing around the machine that may catch on working controls and projections or into fans, pulleys and other moving parts causing personal injury.
- Use additional safety items-PPE, e.g. hard hat, safety protection, safety goggles, gloves, etc., as appropriate or required.
- DO NOT operate the machine or any equipment attached to it while under the influence of alcohol, medication, or other drugs, or while fatigued.
- DO NOT wear radio or music headphones while operating the engine.

1AEAAAAAP0130

3. CHECK BEFORE STARTING AND OPERATING THE ENGINE

- Inspect the engine before operation. Do not operate the engine if there is something wrong with it. Repair it immediately.
- Ensure all guards and shields are in place before operating the engine. Replace any that are damaged or missing.
- Check to see that you and others are a safe distance from the engine before starting.
- Always keep the engine at least 3 feet (1 meter) away from buildings and other facilities.
- DO NOT allow children or livestock to approach the machine while the engine is running.
- DO NOT start the engine by shorting across starter terminals.

1BAABADAP0010

4. KEEP THE ENGINE AND SURROUNDINGS CLEAN

- Stop the engine before cleaning.
- Keep the engine clean and free of accumulated dirt, grease and trash to avoid a fire. Store flammable fluids in proper containers and cabinets away from sparks and heat.
- Check for and repair leaks immediately.
- DO NOT stop the engine without idling; Allow the engine to cool down, first. Keep the engine idling for about 5 minutes before stopping unless there is a safety problem that requires immediate shut down.

1AEAAAAAP0120

5. SAFE HANDLING OF FUEL AND LUBRICANTS -KEEP AWAY FROM FIRE

- Always stop the engine before refueling and/or lubricating.
- DO NOT smoke or allow flames or sparks in your work area. Fuel is extremely flammable and explosive under certain conditions.
- Refuel at a well ventilated and open place. When fuel and/or lubricants are spilled, refuel after letting the engine cool down.
- Do not use unapproved containers e.g. buckets, bottles, jars. Use approved fuel storage containers and dispensers.

1BGAAAIAP013A

- If running the engine on LPG, use the standard LPG fuel recommended by KUBOTA. The use of other fuel may cause a hazardous or dangerous condition.
- LPG fuel in the gaseous state is heavier than air and will settle in low areas, this may be hazardous.
  Please follow all operator's manual instructions when changing the fuel tank and servicing the fuel system.

6. EXHAUST GASES AND FIRE PREVENTION

- Engine exhaust fumes can be very harmful if allowed to accumulate. Run the engine in a well ventilated location and where there are no people or livestock near the engine.
- The exhaust gas from the muffler is very hot. To prevent a fire, do not expose dry grass, mowed grass, oil or any other combustible materials to exhaust gas. Keep the engine and muffler clean at all times.
- To avoid a fire, be alert for leaks of flammable substances from hoses and lines. Check for leaks from hoses or pipes, such as fuel and hydraulic fluid by following the maintenance check list.
- To avoid a fire, do not short across power cables and wires. Check to see that all power cables and wirings are in good condition. Keep all electrical connections clean. Bare wire or frayed insulation can cause a dangerous electrical shock and personal injury.

7. ESCAPING FLUID

- Relieve all pressure in the air, the oil and the cooling systems before disconnecting any lines, fittings or related items.
- Be cautious of possible pressure relief when disconnecting any device from a pressurized system that utilizes pressure. DO NOT check for pressure leaks with your hand. High pressure oil or fuel can cause personal injury.
- Escaping fluid under pressure has sufficient force to penetrate skin causing serious personal injury.
- Fluid escaping from pinholes may be invisible. Use a piece of cardboard or wood to search for suspected leaks: do not use hands and body. Use safety goggles or other eye protection when checking for leaks.
- If injured by escaping fluid, see a medical doctor immediately. This fluid can produce gangrene or severe allergic reaction.

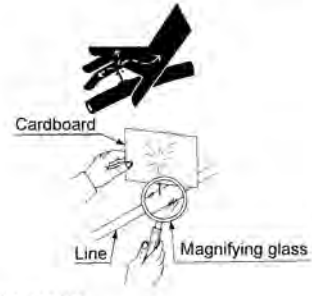

1ABAAAAAP120F

8. CAUTIONS AGAINST BURNS AND BATTERY EXPLOSION

- To avoid burns, be cautious of hot components, e.g. muffler, muffler cover, radiator, hoses, engine body, coolants, engine oil, etc. during operation and after the engine has been shut off.
- DO NOT remove the radiator cap while the engine is running or immediately after stopping. Otherwise hot water will spout out from the radiator. Wait until the radiator is completely cool to the touch before removing the cap. Wear safety goggles.
- Close the coolant drain valve, secure the pressure cap, and fasten the pipe band before operating. If these parts are taken off, or loosened, it will result in serious personal injury.
- The battery presents an explosive hazard. When the battery is being charged, hydrogen and oxygen gases are extremely explosive.
- DO NOT use or charge the battery if its fluid level is below the LOWER mark.
  Otherwise, the component parts may deteriorate earlier than expected, which may shorten the service life or cause an explosion. Immediately, add distilled water until the fluid level is between the UPPER and LOWER marks.
- Keep sparks and open flames away from the battery, especially during charging. DO NOT strike a match near the battery.
- DO NOT check the battery charge by placing a metal object across the terminals. Use a voltmeter or hydrometer.
- DO NOT charge a frozen battery. There is a risk of explosion. When frozen, warm the battery up to at least 16°C (61°F).

1AEABAAAP0080

1AAAAABAP0230

1ARAEAAAP0520

9. KEEP HANDS AND BODY AWAY FROM ROTATING PARTS

- Stop the engine before checking or adjusting the belt tension and cooling fan.
- Keep your hands and body away from rotating parts, such as the cooling fan, V-belt, fan drive pulley or flywheel. Contact with rotating parts can cause severe personal injury.
- DO NOT run the engine without safety guards. Install safety guards securely before operation.

1ABAAAAAP1470

10. ANTI-FREEZE AND DISPOSAL OF FLUIDS

- Anti-freeze is poisonous. If it is swallowed, seek immediate medical help. Do NOT make a person throw up unless told to do so by poison control or a health care professional. Use standard first aid and CPR for signs of shock or cardiac arrest. Call your local Poison Control Center or your local emergency number for further assistance.
- Wear rubber gloves to avoid personal injury, when you treat anti-freeze. In case of contact with skin, wash it off immediately.
- DO NOT mix different types of Anti-freeze. The mixture can produce a chemical reaction causing harmful substances. Use approved or genuine KUBOTA Anti-freeze.
- Be mindful of the environment and the ecology. Before draining any fluids, determine the correct way to dispose of them. Observe the relevant environmental protection regulations when disposing of oil, fuel, coolant, brake fluid, filters and batteries.
- When draining fluids from the engine, place a suitable container underneath the engine body.
- DO NOT pour waste onto the ground, down a drain, or into any water source. Dispose of waste fluids according to environmental regulations.

1BJABAAAP0190

1BJABAAAP0180

11. CONDUCTING SAFETY CHECKS AND MAINTENANCE

- When inspecting the engine or servicing, place the engine on a large flat surface. DO NOT work on anything that is supported ONLY by lift jacks or a hoist. Always use blocks or the correct stands to support the engine before servicing.
- Disconnect the battery from the engine before conducting service. Put a "DO NOT OPERATE!" tag on the starter switch to avoid accidental starting.
- To avoid sparks from an accidental short circuit always disconnect the battery's ground cable (-) first and reconnect it last.
- Stop the engine and remove the key when conducting daily and periodic maintenance, service and cleaning.
- Check or conduct maintenance after the engine, coolant, muffler, or muffler cover have cooled off completely.
- Always use the appropriate tools and fixtures. Verify that they are in good condition before performing any service work. Make sure you understand how to use them before service.
- Use ONLY correct engine barring techniques for manually rotating the engine. DO NOT attempt to rotate the engine by pulling or prying on the cooling fan and V-belt. This practice can cause serious personal injury or premature damage to the cooling fan and belt.

1BJABAAAP0200

- Replace fuel pipes and lubricant pipes with their hose clamps every 2 years or earlier whether they are damaged or not. They are made of rubber and age gradually.
- When servicing is performed together by two or more persons, take care to perform all work safely.
- Keep a first aid kit and fire extinguisher handy at all times.

12. SAFETY LABELS

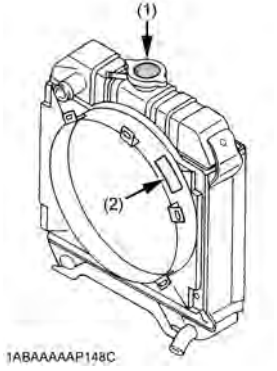

1ABAAAAAP148C

(1) The following label is just an example. A different label might be applied on the actual machine.

1ABACAAAP036K

(2) Part No.TA040-4957-1
Do not get your hands close to engine fan and fan belt.

1AGAMAAAP2820

13. CARE OF SAFETY LABELS

1. Keep safety labels clean and free from obstructing material.
2. Clean safety labels with soap and water, dry with a soft cloth.
3. Replace damaged or missing safety labels with new labels from your local KUBOTA dealer.
4. If a component with safety label(s) affixed is replaced with a new part, make sure the new label(s) is (are) attached in the same location(s) as the replaced component.
5. Mount new safety labels by applying to a clean dry surface and pressing any bubbles to the outside edge.

SERVICING THE ENGINE

Your dealer has knowledge of your new engine and has the desire to help you get the most value from it. After reading this manual thoroughly, you will find that you can do some of the regular maintenance yourself.
However, when in need of parts or major service, see your KUBOTA dealer.
For service, contact the KUBOTA Dealership from which you purchased your engine or your local KUBOTA dealer.
When in need of parts, be prepared to give your dealer the engine serial number.
Locate the serial number now and record them in the space provided.

	Type	Serial No.
Engine		
Date of Purchase		
Name of Dealer		
(To be filled in by purchaser)		

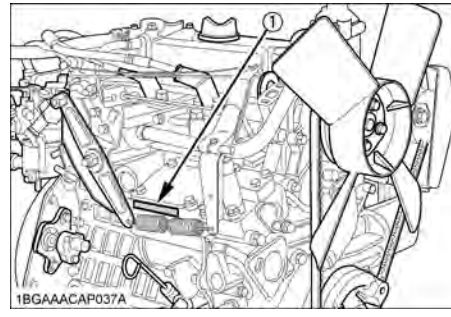

(1) Engine serial number

IMPORTANT INFORMATION OF EMISSION REGULATION

The off-road spark ignited engine at or below 19kW manufactured after January 1st 2024 must not be sold into California since the zero-emission requirements in the CARB SORE regulations (13CCR § 2403(b)(1)) start from 2024 Model Year.

1. INLET AND EXHAUST SYSTEM (COMMON)

THE WG972-E2/DF972-E2 ENGINE MUST USE THE BELOW AIR CLEANER AND INLET PIPE, AND EXHAUST BACK PRESSURE OF THE MUFFLER MUST BE WITHIN THE BELOW VALUES;

PART	PART NO.
GENUINE AIR CLEANER	1G657-1101-1
GENUINE INLET PIPE	EG561-1164-1

BRAKE HORSE POWER	SAE net int.	ALLOWABLE MAXIMUM EXHAUST BACK PRESSURE
23.1 kW (31.0 HP)/ 3600 rpm		19.6 kPa (147.1 mmHg, 0.2 kgf/cm², 2.8 psi)/ 3600 rpm

2. KUBOTA RECOMMENDED LPG FUEL SPECIFICATIONS [DF972-E2]

- **Commercial Propane gas only.**
- **Equivalent to Propane H-D-5 of GPA* standards.**

C_3H_8	C_3H_6	C_4H_{10}	Others	
≧90%	≦5%	≦2.5%	-	(vol. %)

*GPA means Gas Processors Association (U.S.A.)

3. LENGTH OF THE LPG VAPOR HOSE [DF972-E2]

The length of the LPG vapor hose between the LPG carburetor and its regulator should be within 300 ± 20 mm (11.8 ± 0.78 in.) for KUBOTA recommendation.

4. LPG REGULATOR WITH VAPORIZER [DF972-E2]

When operating DF972-E2 on LPG, only a KUBOTA GENUINE LPG REGULATOR KIT can be used.
Only this regulator can be installed by an authorized KUBOTA DISTRIBUTOR or the manufacturer of the equipment in which this engine is used.

5. HIGH ALTITUDE OPERATION

IMPORTANT :

- EPA emission regulation require the ultimate users of non-road SI engine, as their obligation, to adjust the emissions by installing the appropriate genuine altitude compensation kit. And the engine manufacturer must provide such kit when the engine is operated at an altitude that exceeds the standard level, as guarantied by the engine manufacturer. For this purpose, KUBOTA prepared genuine altitude compensation kit described below. The ultimate users of SI engines must comply with the regulations through the installation of the appropriate altitude compensation kit for the altitude range where the engine will be operated.

Altitude Compensation Kit	Applicable Altitude Ranges
Original carburetor (with 0 m kit) 0 m 0 ft	⟷ 700 m 2300 ft
1000 m compensation kit	300 m 1000 ft ⟷ 1700 m 5600 ft
2000 m compensation kit	1300 m 4300 ft ⟷ 2700 m 8900 ft

*Prepare for the users who have lost original carburetor's jet.
Altitude compensation kit part number: Please contact your local KUBOTA dealer and specify your engine type and engine serial No.
Please consult your local KUBOTA dealer for further information on the altitude compensation kit.

CONSULT YOUR LOCAL KUBOTA DEALER FOR FURTHER INFORMATION ON THIS PROCEDURE.

NAMES OF PARTS

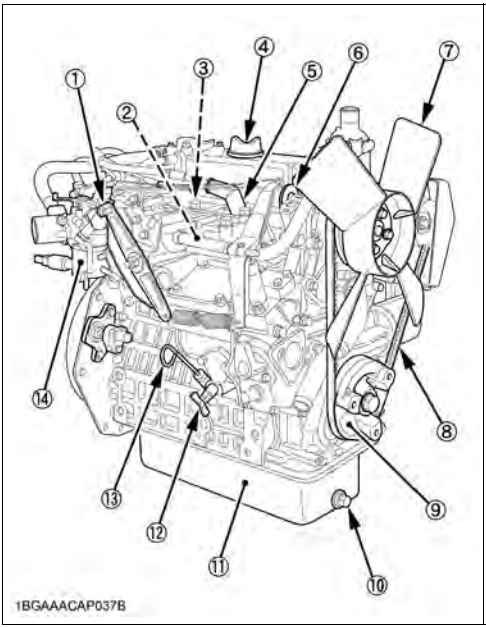

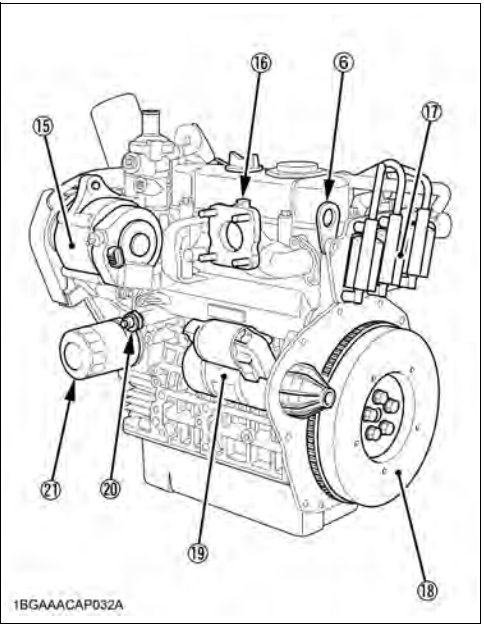

Ref. No.	Part Name	Type		Ref. No.	Part Name	Type	
		G	GL			G	GL
(1)	Speed control lever	○	○	(12)	Coolant drain plug	○	○
(2)	Intake manifold	○	○	(13)	Oil level gauge	○	○
(3)	Spark plug	○	○	(14)	Carburetor	○	○
(4)	Oil filler plug	○	○	(15)	Alternator	○	○
(5)	Plug cap	○	○	(16)	Exhaust manifold	○	○
(6)	Engine hook	○	○	(17)	Ignition coil	○	○
(7)	Cooling fan	○	○	(18)	Flywheel	○	○
(8)	Fan belt	○	○	(19)	Starter	○	○
(9)	Fan drive pulley	○	○	(20)	Oil pressure switch	○	○
(10)	Oil drain plug	○	○	(21)	Oil filter cartridge	○	○
(11)	Oil pan	○	○				

G Type : WG972-E2, GL Type : DF972-E2

PRE-OPERATION CHECK

BREAK-IN

During the engine break-in period, observe the following by all means:

1. Change engine oil and oil filter cartridge after the first 50 hours of operation. (See "ENGINE OIL" in "PERIODIC SERVICE" section.)
2. When ambient temperature is low, operate the machine after the engine has been completely warmed up.

DAILY CHECK

To prevent trouble from occurring, it is important to know the conditions of the engine well. Check it before starting.

WARNING

To avoid personal injury or death:

- **Install shields and safeguards attached to the engine when operating.**
- **Stop the engine at a flat and wide space when checking.**
- **Keep dust or fuel away from the battery, wiring, muffler and engine to prevent a fire. Check and clear them before operating everyday. Pay attention to the heat of the exhaust pipe or exhaust gas so that it can not ignite trash.**

Item		Ref. page
1. Parts which had trouble in previous operation		-
2. By walking around the machine	(1) Oil or water leaks	17 to 21
	(2) Engine oil level and contamination	17, 18
	(3) Amount of fuel	16
	(4) Amount of coolant	19 to 21
	(5) Dust in air cleaner dust cup	22
	(6) Damaged parts and loosened bolts and nuts	-
3. By inserting the key into the starter switch	(1) Proper functions of meters and pilot lamps; no stains on these parts	-
4. By starting the engine	(1) Unusual engine noise	9
	(2) Engine start-up condition	5
	(3) Slow-down and acceleration behavior	9

OPERATING THE ENGINE

STARTING THE ENGINE (NORMAL)

WARNING

To avoid personal injury or death:

- **Do not allow children to approach the machine while the engine is running.**
- **Install the machine on which the engine is installed, on a flat place.**
- **Do not run the engine on gradients.**
- **Do not run the engine in an enclosed area. Exhaust gas can cause air pollution and exhaust gas poisoning.**
- **Keep your hands away from rotating parts (such as fan, pulley, belt, flywheel etc.) during operation.**
- **Do not operate the machine while under the influence of alcohol or drugs.**
- **Do not wear loose, torn or bulky clothing around the machine. It may catch on moving parts or controls, leading to the risk of accident. Use additional safety items, e.g. hard hat, safety boots or shoes, eye and hearing protection, gloves, etc., as appropriate or required.**
- **Do not wear radio or music headphones while operating engine.**
- **Check to see if it is safe around the engine before starting.**
- **Reinstall safeguards and shields securely and clear all maintenance tools when starting the engine after maintenance.**

IMPORTANT :

- When starting the engine after a long storage (of more than 3 months), activate the starter for about 10 seconds to allow oil to reach every engine part.

Gasoline

1. **Open the fuel valve of the gasoline line.**

2*. **Turn the fuel selector switch* to the "GASOLINE" position.**

NOTE:
*The step "2" above is for GL type only.
*The fuel selector switch is not provided by KUBOTA.

LPG

1. **Open the liquid withdrawal valve of the LPG fuel tank.**

2*. **Turn the fuel selector switch* to the "LPG" position.**

NOTE:
*The step "2" above is for GL type only.
*The fuel selector switch is not provided by KUBOTA.

3. **Set the speed control lever to "Low idling".**
   [Electron governor]
   Set the engine speed control to "Low idling".

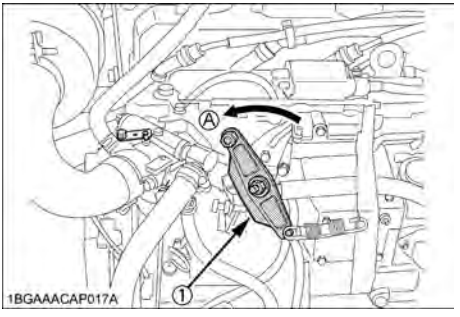

(1) Speed control lever (A) "LOW IDLING"

4. **Move the choke lever to the "CLOSED" position.**

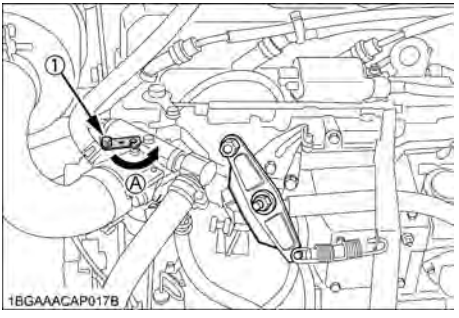

(1) Choke lever (A) "CLOSED"

4. **DO NOT move the choke lever, when LPG starting.**

5. Insert the key into the starter switch and turn it to the "ON" (◉) position.

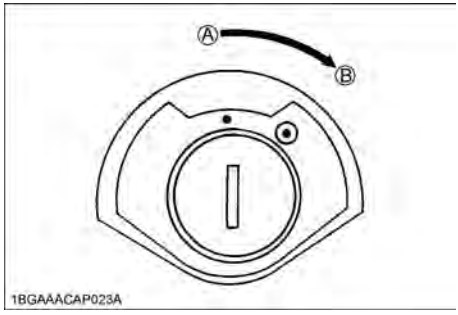

(A) “OFF“
(B) “ON”

6. Check to see that the oil pressure lamp and charge lamp are ON.

7. Turn the key to the "START" position and the starter will begin turning. Release the key immediately, when the engine starts.

8. If the engine is started, open the choke lever gradually (move the lever to the "OPEN" position).

8. Do not move the choke lever, when LPG starting.

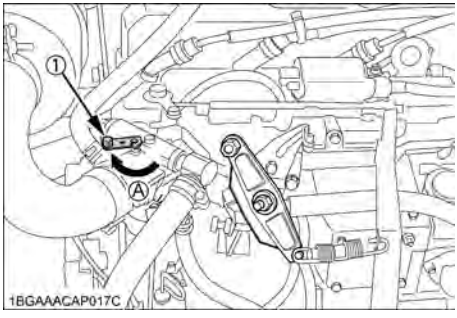

(1) Choke lever (A) "OPEN"

9. Check to see that the oil pressure lamp and charge lamp are OFF. If not, immediately stop the engine and check the cause.

10. Warm up the engine at medium speed running for 3 to 5 minutes.

IMPORTANT :
- NEVER turn the starter switch while the engine is running.
- Warm up the engine not only in winter but also in other warmer seasons.
- In case of converting the fuel (gasoline ⟷ LPG) while running the engine, the engine should be operated with the engine speed high and no-loaded. If you convert the fuel with the engine speed low, the engine will stop.

STOPPING THE ENGINE

Gasoline

1. **Disengage the engine drive power and set the speed control lever to "low idling".**

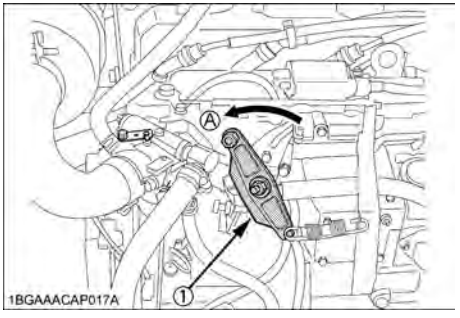

(1) Speed control lever (A) "LOW IDLING"

2. **Close the fuel valve of the gasoline line.**
3. **Cool down the engine for 2 to 3 minutes.**
4. **Turn the starter switch to the "OFF" (●) position.**
5. **Remove the key at the "OFF" position.**

LPG

1. **Cool down the engine for 2 to 3 minutes.**
2. **Turn the starter switch to the "OFF" (●) position.**
3. **Close the liquid withdrawal valve of the LPG fuel tank.**
4. **Remove the key at the "OFF" position.**

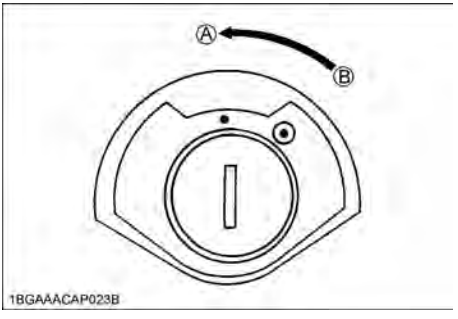

(A) “OFF“
(B) “ON”

CHECKS DURING OPERATION

While running, make the following checks to see that all parts are working correctly.

■Radiator cooling water (Coolant)

WARNING

To avoid personal injury or death:

- **Do not remove radiator cap until coolant temperature is well below its boiling point. Then loosen cap slightly to the stop position, to relieve any pressure, before removing cap completely.**

If the coolant temperature warning lamp lights up or if steam or coolant does not stop squirting from the radiator overflow pipe, turn off the load and **keep the engine idling (COOLING-DOWN) for at least 5 minutes** to let it cool down gradually. Then stop the engine and take the following inspection and servicing.

1. Check to see if the coolant runs short or if there is any coolant leak;
2. Check to see if there is any obstacle around the cooling air inlet or outlet;
3. Check to see if there is any dirt or dust between radiator fins and tube;
4. Check to see if the fan belt is too loose; and
5. Check to see if radiator water pipe is clogged.

■Oil pressure lamp

The lamp lights up to warn the operator that the engine oil pressure has dropped below the prescribed level. If this should happen during operation or should not go off even after the engine is accelerated more than 1000rpm, immediately stop the engine and check the following:

1. Engine oil level (See "ENGINE OIL" in "PERIODIC SERVICE" section.)

■Immediately stop the engine if;

- The engine suddenly slows down or accelerates.
- Unusual noises are suddenly heard.
- The oil pressure lamp or the water temperature alarm lamp lights up.

TAMPER RESISTANCE

If service or repair is needed, contact your local KUBOTA dealer.

■Carburetor [WG972-E2], Dual fuel carburetor [DF972-E2]

The carburetor is tamper resistant; the idle mixture screw has been covered by tamper plug after adjustment at the factory.

You **CANNOT** adjust this screw.

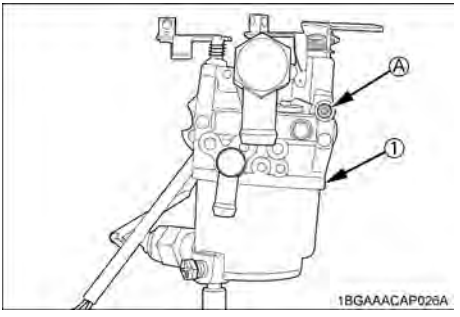

(1) Carburetor (A) Tamper resistance

■Sensor (crank angle)

The sensor is tamper resistant; the ignition timing adjustment screw has been covered after adjustment at the factory.

You **CANNOT** adjust the ignition timing.

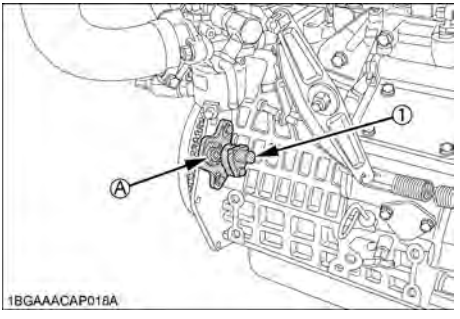

(1) Sensor (A) Tamper resistance

■LPG regulator [DF972-E2]

LPG regulator is tamper resistant; the main and idle pressure adjustment screws have been covered by tamper caps after adjustment at the factory.
You **CANNOT** adjust the above 2 screws.

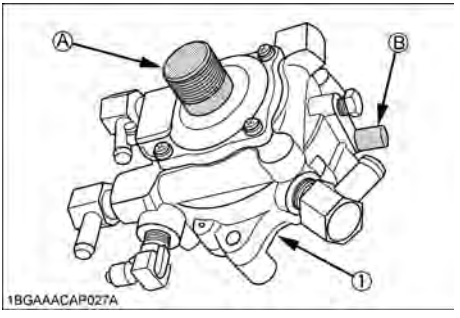

(1) LPG regulator
(A) For main pressure resistance
(B) For idle pressure resistance

MAINTENANCE

WARNING

To avoid personal injury or death:

- **Conduct daily checks, periodic maintenance, refueling or cleaning on a level surface with the engine shut off and remove the key.**
- **Before allowing other people to use your engine, explain how to operate, and have them read this manual before operation.**
- **Always use proper tools, that are in good condition. Make sure you understand how to use them, before performing any service work.**
- **When installing, tighten all bolts lest they should be loose. Tighten the bolts by the specified torque.**
- **Do not put any tools on the battery, or battery terminals may short out. Severe burns or fire could result. Detach the battery from the engine before maintenance.**
- **Do not touch muffler or exhaust pipes while they are hot; Severe burns could result.**

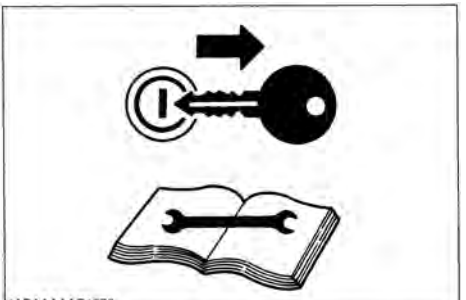

1ABAAAAAP1270

1ABAAAAAP1280

SERVICE INTERVALS

Non-warranty maintenance, repair, or replacement of the emission control devices and systems should be performed by a qualified repair establishment or individual which has the experience and equipment to perform such work.
See the Emission Warranty Statement.

In order to keep your engine in good working conditions, follow the maintenance / checking schedule given in the table below. (The schedule applies to an engine in use under normal conditions.)

Items		Interval				Remarks	Ref. Page
		Every 8 hours (daily)	Every 50 hours (weekly)	Every 100 hours	Every 200 hours		
Each part	Check / Clean	●					-
Engine oil	Check / Replenish	●					17
	Change		(Initial change)		●		18
Oil filter cartridge	Change		(Initial change)		●		18
Spark plug	Change						-
Ignition wires	Change						-
Air cleaner element	Check	▲					22
	Clean	▲	●				22
	Change						22
Intake pipe / clamp bands	Change						-
Breather tube	Change						-
Fuel filter	Check			●			-
	Change			▲			-
Fuel tank	Clean					Gasoline line	-
	Check setting	▲			●	LPG line	16
Fuel pipe / clamps (Gasoline line)	Check		●				16
	Change						16
Fuel pipe / clamps (LPG line: LPG tank to Dual carburetor)	Check the connector	●					-
	Check fuel leakage		●				16
	Change						-

▲: If necessary

IMPORTANT:

*1 Change more often when operating under dusty conditions.

*2 If you do not have the proper tools and/or are not mechanically proficient, contact your local KUBOTA dealer.

To ensure the best quality and reliability, use new KUBOTA Genuine parts or their equivalents for repair and replacement, whenever you have maintenance done.

Items		Interval				Remarks	Ref. Page
		Every 1000 hours	Every after 1000 hours	Yearly	Each 2 years		
Each part	Check / Clean						-
Engine oil	Check / Replenish						17
	Change						18
Oil filter cartridge	Change						18
Spark plug	Change	●					-
Ignition wires	Change				●		-
Air cleaner element	Check						22
	Clean						22
	Change			●*1			22
Intake pipe / clamp bands	Change				●		-
Breather tube	Change				●		-
Fuel filter	Check						-
	Change			●			-
Fuel tank	Clean			●		Gasoline line	-
	Check setting					LPG line	16
Fuel pipe / clamps (Gasoline line)	Check						16
	Change			●			16
Fuel pipe / clamps (LPG line: LPG tank to Dual carburetor)	Check the connector						-
	Check fuel leakage						16
	Change				●		-

▲: If necessary

IMPORTANT:

*1 Change more often when operating under dusty conditions.

*2 If you do not have the proper tools and/or are not mechanically proficient, contact your local KUBOTA dealer.

To ensure the best quality and reliability, use new KUBOTA Genuine parts or their equivalents for repair and replacement, whenever you have maintenance done.

Items		Interval				Remarks	Ref. Page
		Every 8 hours (daily)	Every 50 hours (weekly)	Every 100 hours	Every 200 hours		
LPG vaporizer regulator	Check					Hot water line / vacuum lock pipe	17
	Change					Hot water line / vacuum lock pipe	-
	Check inner parts*2						-
Battery	Check		●				-
	Change						-
Radiator coolant	Check	●					19
	Change						20
Radiator hoses and clamp bands	Check				●		20
	Change						20
Radiator and water jacket	Clean						20
Fan belt tension	Check			●			26
	Adjust			▲			26
Valve clearance	Adjust						-
Combustion chamber	Clean						-

▲: If necessary

IMPORTANT:

*1 Change more often when operating under dusty conditions.

*2 If you do not have the proper tools and/or are not mechanically proficient, contact your local KUBOTA dealer.

To ensure the best quality and reliability, use new KUBOTA Genuine parts or their equivalents for repair and replacement, whenever you have maintenance done.

Items		Interval				Remarks	Ref. Page
		Every 1000 hours	Every after 1000 hours	Yearly	Each 2 years		
LPG vaporizer regulator	Check	●				Hot water line / vacuum lock pipe	17
	Change				●	Hot water line / vacuum lock pipe	-
	Check inner parts*2				●		-
Battery	Check						-
	Change				●		-
Radiator coolant	Check						19
	Change				●		20
Radiator hoses and clamp bands	Check						20
	Change				●		20
Radiator and water jacket	Clean			●			20
Fan belt tension	Check						26
	Adjust						26
Valve clearance	Adjust	●*2					-
Combustion chamber	Clean		▲*2				-

▲: If necessary

IMPORTANT:

*1 Change more often when operating under dusty conditions.

*2 If you do not have the proper tools and/or are not mechanically proficient, contact your local KUBOTA dealer.

To ensure the best quality and reliability, use new KUBOTA Genuine parts or their equivalents for repair and replacement, whenever you have maintenance done.

PERIODIC SERVICE

FUEL

Fuel is flammable and can be dangerous. You should handle fuel with care.

■Gasoline

1. Use unleaded gasoline only.

IMPORTANT :
- DO NOT use gasoline blended with methyl alcohol.

■Fuel level check and refueling

1. Check to see that the fuel level is above the lower limit of the fuel level gauge.
2. If the fuel is too low, add fuel to the upper limit. Do not overfill.

■Checking the fuel pipes

WARNING

To avoid personal injury or death:
- **Stop the engine before checking or replacing the fuel pipes. Broken fuel pipes can cause fires.**

Check the fuel pipes every 50 hours of operation. When if;
1. If the clamp band is loose, apply oil to the screw of the band, and tighten the band securely.
2. If the fuel pipes, made of rubber, become worn out, replace them and clamp bands every year.
3. If the fuel pipes and clamp bands are found worn or damaged before one year passes, replace or repair them at once.

IMPORTANT :
- When the fuel pipes are not installed, plug them at both ends with clean cloth or paper to prevent dirt from entering. Dirt in the pipes can cause fuel injector malfunction.

NOTE :
- For the locations of fuel pipes, see "Fuel system diagrams" in "FUEL SYSTEM AND DIAGRAMS" section.

■LPG

[DF972-E2]
1. Use Commercial LPG only.
2. Fuel tank is liquid withdrawal type.

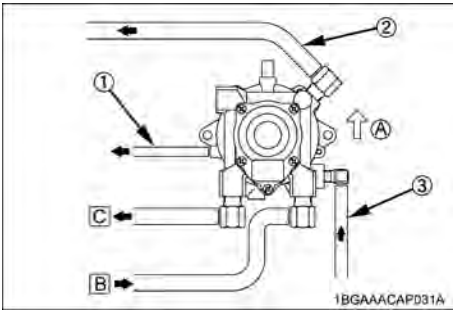

(1) Boost lock pipe
(2) Gaseous hose
(3) Liquid hose
(A) UPRIGHT
(B) Hot water IN
(C) Hot water OUT

IMPORTANT :
- Be sure that the fill up valve and the liquid withdrawal valve are closed.
- Be sure that LPG hose is connected with the liquid withdrawal valve.
- Be sure that LPG tank is placed firmly not to move by machine vibration.
  (See "FUEL SYSTEM AND DIAGRAMS" section.)

■LPG leakage check

[DF972-E2]

WARNING

To avoid personal injury or death:
- **Never test for gas leaks with a flame.**

Turn on the gas at low idling rpm and use a soap solution or equivalent to check all connections for leaks between the fuel tank and dual fuel carburetor.
Bubbles will indicate a loose connection.

■LPG fuel tank check

[DF972-E2]

Check that LPG fuel tank is installed firmly.
Be sure that the fill up valve and liquid withdrawal valve of the LPG fuel tank can be opened and closed easily.

■LPG regulator check

[DF972-E2]

Check that the hot water lines are not leaking.
Check that the vacuum lock pipe is not damaged.

ENGINE OIL

WARNING

To avoid personal injury or death:

- **Stop the engine before checking and changing the engine oil and the oil filter cartridge.**
- **Contact with engine oil can damage your skin. Put on gloves when using engine oil. If you come in contact with engine oil, wash it off immediately.**

NOTE :

- Always place the engine on a level surface before inspecting it. If placed on gradients, oil quantity may not be measured accurately.

■Checking oil level and adding engine oil

1. Check the engine oil level before starting or more than 5 minutes after stopping the engine.
2. Remove the oil level gauge, wipe it clean and reinstall it.
3. Take the oil level gauge out again, and check the oil level.

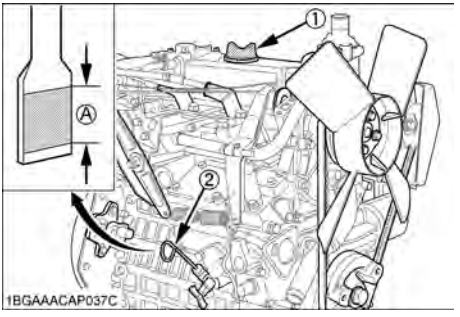

(1) Oil filler plug
(2) Oil level gauge

[Lower end of oil level gauge]
(A) Engine oil level within this range is proper.

4. If the oil level is too low, remove the oil filler plug, and add new oil to the prescribed level.
5. After adding oil, wait more than 5 minutes and check the oil level again. It takes some time for the oil to drain down to the oil pan.

Engine oil quantity	3.4 L (0.90 U.S.gals.)

IMPORTANT :

- Engine oil should meet as a minimum SAE viscosity and SH class grades (API classification).
- Change the type of engine oil according to the ambient temperature.

Above 25°C (77°F)	SAE30 or SAE10W-30 SAE15W-40
0°C to 25°C (32°F to 77°F)	SAE20 or SAE10W-30
0°C to -20°C (32°F to -4°F)	SAE10W or SAE10W-30

- When using oil of different brands from the previous one, drain all the previous oil before adding the new engine oil.

■Changing engine oil

WARNING

To avoid personal injury or death:

- **Stop the engine before draining engine oil.**
- **When draining engine oil, place some container underneath the engine and dispose it according to local regulations.**
- **Do not drain oil after running the engine. Allow engine to cool down sufficiently.**

1. Change oil after the initial 50 hours of operation and every 200 hours thereafter.
2. Remove the drain plug at the bottom of the engine, and drain all the old oil. Drain oil will drain easier when the oil is warm.

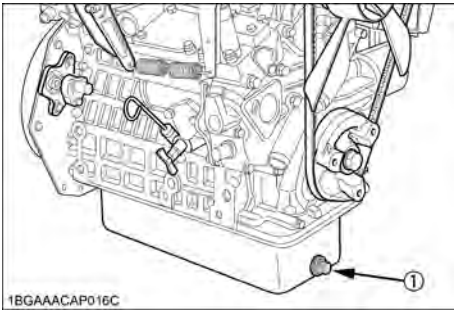

(1) Oil drain plug

3. Replace the drain plug gasket.
4. Add new engine oil up to the upper limit of the oil level gauge.

■Replacing the oil filter cartridge

WARNING

To avoid personal injury or death:

- **Stop the engine before changing the oil filter cartridge.**
- **Allow engine to cool down sufficiently, oil can be hot and cause burns.**

1. Replace the oil filter cartridge after the initial 50 hours of operation and every 200 hours thereafter.
2. Remove the old oil filter cartridge with a filter wrench.
3. Apply a film of oil to the gasket for the new cartridge.
4. Screw in the cartridge by hand. When the gasket contacts the seal surface, tighten the cartridge enough by hand. Because, if you tighten the cartridge with a wrench, it will be tightened too much.

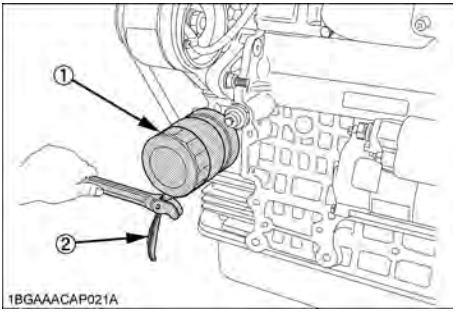

(1) Oil filter cartridge
(2) Remove with a filter wrench
(Tighten with your hand)

5. After the new cartridge has been replaced, the engine oil level normally decreases a little. Thus, run the engine for a while and check for oil leaks through the seal before checking the engine oil level. Add oil if necessary.

NOTE :

- Wipe off any oil sticking to the machine completely.

RADIATOR

Coolant will last for one day's work if filled all the way up before operation start. Make it a rule to check the coolant level before every operation.

WARNING

To avoid personal injury or death:

- **Do not stop the engine suddenly, stop it after about 5 minutes of unloaded idling.**
- **Work only after letting the engine and radiator cool off completely (more than 30 minutes after it has been stopped).**
- **Do not remove the radiator cap while coolant is hot. When cool to the touch, rotate cap to the first stop to allow excess pressure to escape. Then remove cap completely.**
  If overheats should occur, steam may gush out from the radiator or recovery tank; Severe burns could result.

■Checking coolant level, adding coolant

1. Remove the radiator cap, after the engine has completely cooled, and check to see that coolant reaches the supply port.

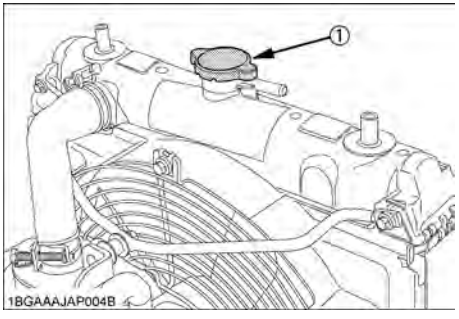

(1) Radiator pressure cap

2. If the radiator is provided with a recovery tank, check the coolant level of the recovery tank. When it is between the "FULL" and "LOW" marks, the coolant will last for one day's work.

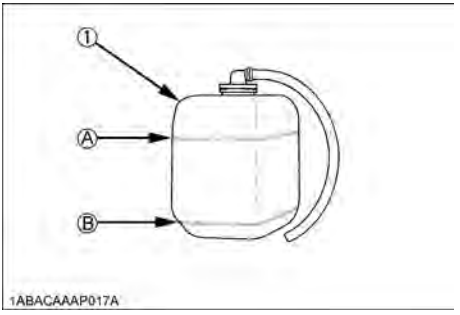

(1) Recovery tank (A) "FULL"
(B) "LOW"

3. When the coolant level drops due to evaporation, add water only up to the full level.
4. Check to see that two drain plags; one is at the crankcase side and the other is at the lower part of the radiator as figures below.

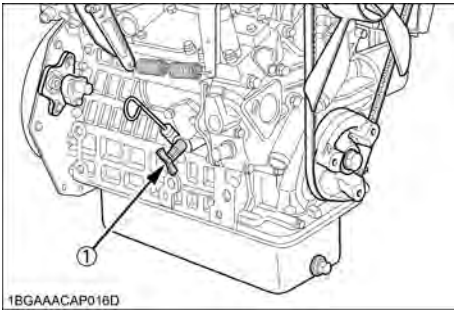

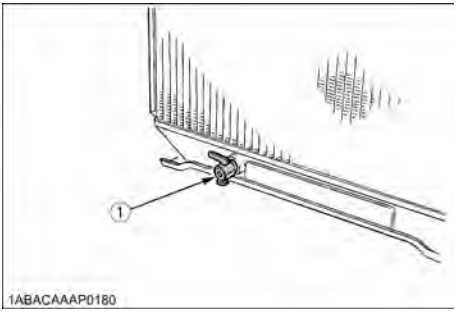

(1) Coolant drain plag

IMPORTANT :
- If the radiator cap has to be removed, follow the caution and securely retighten the cap.
- If coolant should be leak, consult your local KUBOTA dealer.
- Make sure that muddy or sea water does not enter the radiator.
- Use clean, fresh water and 50% anti-freeze to fill the recovery tank.
- Do not refill recovery tank with coolant over the "FULL" level mark.
- Close the radiator cap securely. If the cap is loose or improperly closed, coolant may leak out and decrease quickly.

■Changing coolant

1. To drain coolant, always open both drain plags and simultaneously open the radiator cap as well. With the radiator cap kept closed, a complete drain of water is impossible.
2. Remove the overflow pipe of the radiator pressure cap to drain the recovery tank.
3. Prescribed coolant volume (U.S.gallons)

Quantity	3.1 L (0.82 U.S.gals.)

NOTE :
- Coolant quantities shown are for standard radiators.

4. An improperly tightened radiator cap or a gap between the cap and the seat quickens loss of coolant.
5. Coolant (Radiator cleaner and anti-freeze)

Season	Coolant
All seasons	Pure water and anti-freeze (See "Anti-freeze" in "RADIATOR" section.)

■Remedies for quick decrease of coolant

1. Check any dust and dirt between the radiator fins and tube. If any, remove them from the fins and the tube.
2. Check the tightness of the fan belt. If loose, tighten it securely.
3. Check the internal blockage in the radiator hose. If scale forms in the hose, clean with the scale inhibitor or its equivalent.

■Checking radiator hoses and clamp bands

⚠ WARNING

To avoid personal injury or death:
- **Check radiator hoses and clamp bands periodically. If radiator hose is damaged or coolant leaks, overheats or severe burns could occur.**

Check to see if radiator hoses are properly fixed every 200 hours of operation or 6 months, whichever comes first.
1. If hose clamps are loose or water leaks, tighten hose clamp securely.
2. Replace hoses and tighten hose clamps securely, if radiator hoses are swollen, hardened or cracked.

Replace hoses and hose clamps every 2 years or earlier, if checked and found that hoses are swollen, hardened or cracked.

■Precaution at overheating

The event that the coolant temperature is nearly or more than the boiling point is called **"OVERHEATING"**.
While running, make the following checks to see that all parts are working correctly. **If anything is unusual, inspect it, referring to the relevant description in "MAINTENANCE" and "PERIODIC SERVICE" section**.

◆ Coolant

If the coolant temperature warning lamp lights up or if steam or coolant does not stop squirting from the radiator overflow pipe, turn off the load and **keep the engine idling (COOLING-DOWN) for at least 5 minutes** to let it cool down gradually. Then stop the engine and take the following inspection and servicing.
1. Check to see if the coolant runs short or if there is any coolant leak.
2. Check to see if there is any obstacle around the cooling air inlet or outlet.
3. Check to see if there is any dirt or dust between radiator fins and tube.
4. Check to see if the fan belt is too loose.
5. Check to see if radiator water pipe is clogged.

■Cleaning radiator core (outside)

If dust is between the fin and tube, wash it away with running water.

IMPORTANT :
- Do not clean radiator with firm tools such as spatulas or screwdrivers. They may damage specified fin or tube. It can cause coolant leaks or decrease cooling performance.

■Anti-freeze

WARNING

To avoid personal injury or death:

- **When using anti-freeze, put on some protection such as rubber gloves. (Anti-freeze is poisonous.)**
- **If it is swallowed, seek immediate medical help. Do NOT make a person throw up unless told to do so by poison control or a health care professional. Use standard first aid and CPR for signs of shock or cardiac arrest. Call your local Poison Control Center or your local emergency number for further assistance.**
- **When anti-freeze comes in contact with the skin or clothing, wash it off immediately.**
- **Do not mix different types of anti-freeze. The mixture can produce chemical reaction causing harmful substances.**
- **Anti-freeze is extremely flammable and explosive under certain conditions. Keep fire and children away from anti-freeze.**
- **When draining fluids from the engine, place some container underneath the engine body.**
- **Do not pour waste onto the grounds, down a drain, or into any water source.**
- **Also, observe the relevant environmental protection regulations when disposing of anti-freeze.**

Always use a 50/50 mix of long-life coolant and clean soft water in KUBOTA engines.

Contact KUBOTA concerning coolant for extreme conditions.

1. Long-life coolant (hereafter LLC) comes in several types. Use ethylene glycol (EG) type for this engine.
2. Before employing LLC-mixed cooling water, flush the radiator with fresh water. Repeat this procedure 2 or 3 times to clean up the radiator and engine block from inside.
3. Mixing the LLC
   Premix 50% LLC with 50% clean soft water. When mixing, stir it up well, and then fill into the radiator.
4. The procedure for the mixing of water and anti-freeze differs according to the make of the anti-freeze. Refer to SAE J1034 standard, more specifically also to SAE J814c.

Vol % Anti-freeze	Freezing Point		Boiling Point *	
	℃	℉	℃	℉
50	-37	-34	108	226

*At 1.013 x 10⁵Pa (760 mmHg) pressure (atmospheric). A higher boiling point is obtained by using a radiator pressure cap which permits the development of pressure within the cooling system.

5. Adding the LLC
   (1) Add only water if the coolant level reduces in the cooling system by evaporation.
   (2) If there is a coolant leak, add the LLC of the same manufacturer and type in the same coolant percentage.
   *Never add any long-life coolant of different manufacturer. (Different brands may have different additive components, and the engine may fail to perform as specified.)
6. When the LLC is mixed, do not employ any radiator cleaning agent. The LLC contains anti-corrosive agent. If mixed with the cleaning agent, sludge may build up, adversely affecting the engine parts.
7. Kubota's genuine long-life coolant has a service life of 2 years. Change the coolant every 2 years.

NOTE :

- The above data represents industry standards that necessitate minimum glycol content in the concentrated anti-freeze.

AIR CLEANER

Since the air cleaner employed on this engine is a dry type, never apply oil to it.

1. Open the evacuator valve once a week under ordinary conditions - or daily when used in a dusty place. This will get rid of large particles of dust and dirt.
2. Wipe the inside air cleaner clean with cloth if it is dirty or wet.
3. Avoid touching the element except when cleaning.
4. When dry dust adheres to the element, blow compressed air from the inside turning the element. Pressure of compressed air must be under 205 kPa (2.1 kgf/cm², 30 psi).
5. Replace the primary element every year or every 6 cleanings.
   If the primary element is stained heavily, replace it soon. At this time, replace the secondary element too.
6. The secondary element should be removed only if it is to be replaced.
7. To protect the engine, do not remove the secondary element in servicing the primary element.

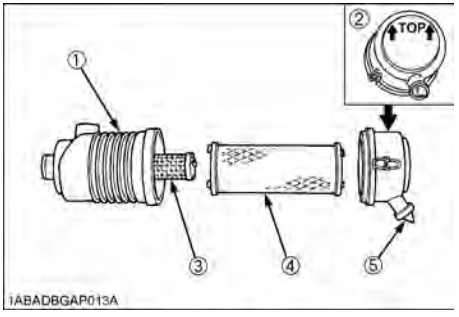

(1) Air cleaner body
(2) Cover
(3) Secondary element
(4) Primary element
(5) Evacuator valve

IMPORTANT :

- Make sure that the hooking clip for cover for the element is tight enough. If it is loose, dust and dirt may be sucked in, wearing down the cylinder liner and piston ring earlier and thereby resulting in poor power output.
- Do not overservice the air cleaner element. Overservicing may cause dirt to enter the engine causing premature wear. Use the dust indicator as a guide on when to service.

■Cleaning primary air cleaner element

1. To clean the element, use clean dry compressed air on the inside of the element.
   Air pressure at the nozzle must not exceed 205 kPa (2.1kgf/cm², 30psi).
   Maintain reasonable distance between the nozzle and the filter.

■Evacuator valve

Open the evacuator valve once a week under ordinary conditions - or daily when used in a dusty place - to get rid of large particles of dust and dirt.

■For the air cleaner with a dust cup (optional)

Remove and clean out the dust cup before it becomes half full with dust; usually once a week, or even every day if the working surroundings are dusty.
Install the air cleaner dust cup with "TOP" indicated on the rear of the cup in the up position. (However, it may be installed in either direction when the cover is placed at the lower part.)

IMPORTANT :

- If the dust cup is mounted incorrectly, dust or dirt does not collect in the cup, and direct attachments of the dust to the element will cause its lifetime to shorten to a great extent.

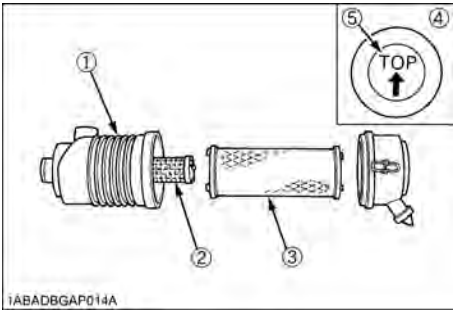

(1) Air cleaner body
(2) Secondary element
(3) Primary element
(4) Dust cup
(5) "TOP" mark

■Dust indicator (optional)

If the red signal on the dust indicator attached to the air cleaner is visible, the air cleaner has reached the service level.
Clean the element immediately, and reset the signal with the "RESET" button.

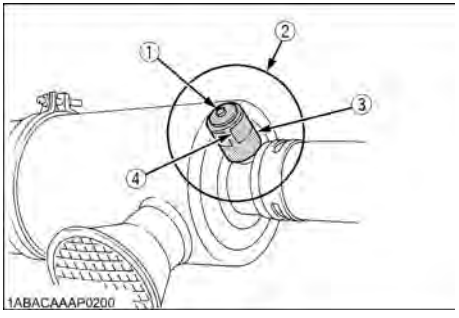

(1) "RESET" button
(2) Dust indicator
(3) Service level
(4) Signal

FUEL SYSTEM AND DIAGRAMS
[DF972-E2]

■LPG fuel system

Never use LPG fuel on the WG972-E2 engine. Otherwise severe damage will occur.

- All fuel connections added to this engine must be installed by qualified personnel and utilizing recognized procedures and standards.
- These non-KUBOTA installed parts, such as hoses, fittings, piping and shut off solenoid valve should be approved for LPG use and conform to UL, CSA, NFPA, MSHA and all other applicable standards.
- An approved, listed fuel filter and shut off solenoid valve must be installed between the LPG tank and KUBOTA LPG regulator with vaporizer.

■Tightening torques and leak check for LPG regulator with vaporizer

1. Each fitting must be sealed with approved joint sealant compound, and be tightened to the specified torque using a wrench and leak check must be performed as shown in the below table.

			Tightening torque			Leak check pressure		
FITTING	Q'ty	SIZE	N-m	kgf-m	ft-lbs	kPa	Kgf/cm²	psi
LPG OUT (VAPOR)	1	PT-3/8	29.4 to 58.8	3.0 to 6.0	21.7 to 43.4	>9.8	>0.1	>1.42
LPG IN (LIQUID)*	1	PT-1/4	19.6 to 39.2	2.0 to 4.0	14.5 to 28.9	>1471	>15	>213
WATER IN/OUT	2	PT-3/8	29.4 to 58.8	3.0 to 6.0	21.7 to 43.4	>245	>2.5	>35.6

*NOT KUBOTA supplied

2. CHANGE THE ANGLE OF LPG FITTING OF DUAL FUEL CARBURETOR
   The fitting on the dual fuel carburetor may be mounted on any position since is not sealed.
   The nut may be loosened using a wrench.
   LPG fitting may be changed to any specified angle.
   The nut should be tightened to the specified torque using a wrench as shown in the below table.

			Tightening torque			Leak check
FITTING	Q'ty	SIZE	N-m	kgf-m	ft-lbs	Soap solution or its equivalent
LPG IN (VAPOR)	1	M12 x 1.25	11.8 to 26.5	1.2 to 2.7	8.7 to 19.5	

■Fuel system diagrams

◆ **Setting of LPG regulator and vibration limits**

Install the LPG regulator in UPRIGHT position as shown in below (A) marking figure.
It must be installed within 4G vibration level. If not, it may not supply necessary LPG fuel to the engine.
(See "LPG" in FUEL" section.)

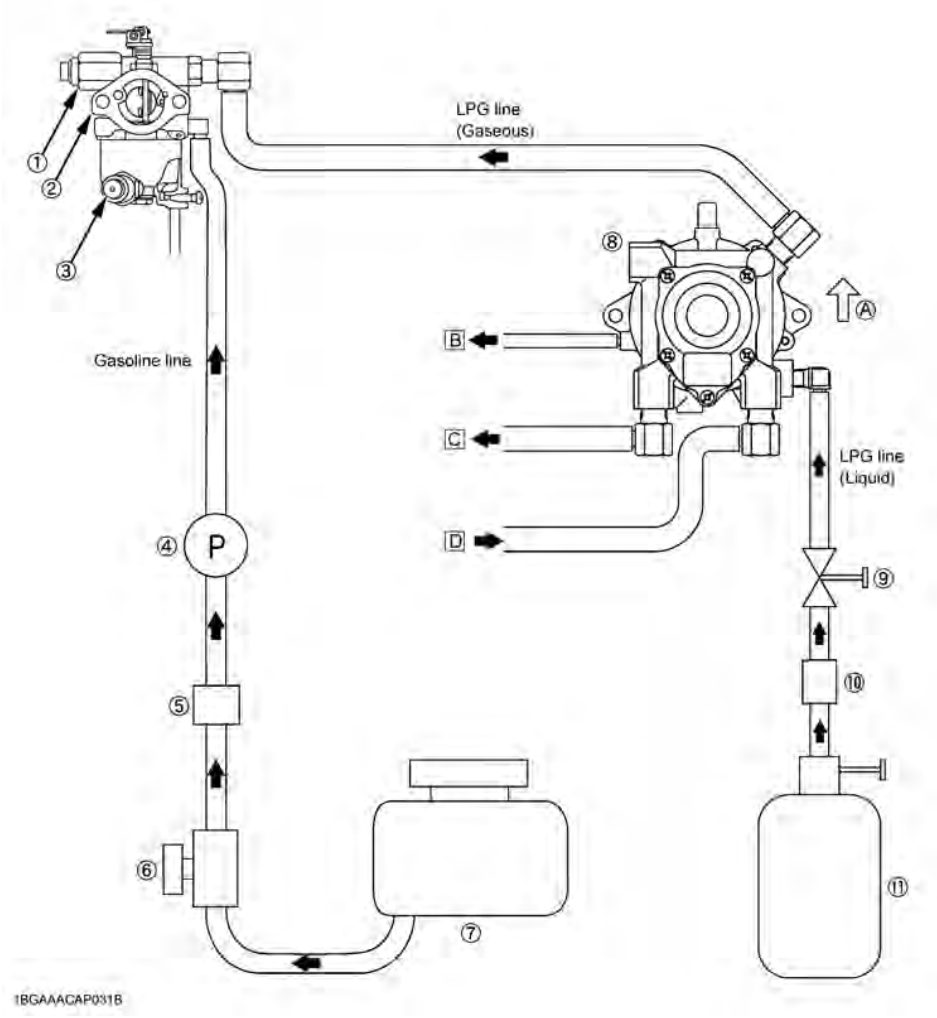

(1) LPG cut off solenoid
(2) Dual-Fuel carburetor
(3) Gasoline cut off solenoid
(4) Fuel pump
(5) Fuel filter
(6) Valve
(7) Gasoline tank
(8) LPG regulator
(9) Shut off solenoid valve
(10) Fuel filter
(11) LPG tank
(A) UPRIGHT
(B) To intake manifold
(C) Hot water OUT
(D) Hot water IN

ELECTRIC WIRING

WARNING

To avoid personal injury or death:

- **Shorting of electric cable or wiring may cause a fire.**
  - **Check to see if electric cables and wiring are swollen, hardened or cracked.**
  - **Keep dust and water away from all power connections.**
    Loose wiring terminal parts, make bad connections. Repair them before starting the engine.

Damaged wiring reduces the capacity of electrical parts. Change or repair damaged wiring immediately.

FAN BELT

■Adjusting fan belt tension

WARNING

To avoid personal injury or death:

- **Stop the engine and remove the key before checking the belt tension.**
- **Reinstall the detached safety shield after maintenance or checking.**

1. Stop the engine and remove the key.
2. Apply moderate thumb pressure to belt between the pulleys.
3. If tension is incorrect, loosen the alternator mounting bolts and, using a lever placed between the alternator and the engine block, pull the alternator out until the tension reaches the proper range.
4. Replace fan belt if it is damaged.

IMPORTANT :

- If belt is loosen or damaged and the fan is damaged, it could result in overheats or insufficient charging. Correct or replace belt.
- Use a sonic tension meter to measure tension. Always measure properly according to the operation manual of the device being used.
- Measure immediately after installing the belt without rotating the pulleys.
  Measure at location (B) in the figure with (L) as the distance between the pulleys.
- For the belt specifications, contact your KUBOTA dealer.
- If a tension meter cannot be used, adjust based on the deflection.
  The deflection must be as indicated by (A) in the figure, when pressing the middle of the belt between the pulleys.

Proper fan belt tension		
Adjustment	Replacement	(A)
200 to 300 N	344 to 441 N	7 to 9 mm (0.28 to 0.35 in.) (under load of 10 kgf (22.1 lbs))

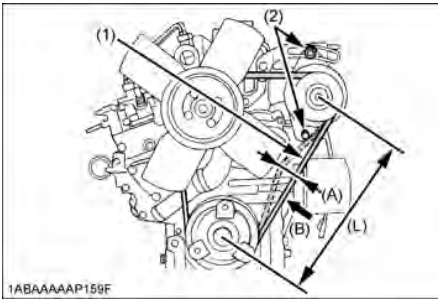

(1) Fan belt
(2) Bolt and nut

CARRIAGE AND STORAGE

CARRIAGE

WARNING

To avoid personal injury or death:

- **Fix the engine securely not to fall during operation.**
- **Do not stand near or under the engine while carrying it.**
- **The engine is heavy. In handling it, be very alert not to get your hands and body caught in.**

1. Use carrier such as a crane when moving the engine to avoid bodily injury. Support the engine securely to avoid injury or damage.
2. When lifting the engine, put the hook securely to metal fittings attached to the engine. Use strong hook and fittings enough to hang the engine.

STORAGE

WARNING

To avoid personal injury or death:

- **Do not clean the machine with engine running.**
- **To avoid the danger of exhaust fume poisoning, do not operate the engine in a closed building without proper ventilation.**
- **When storing the engine just after running, let the engine cool off.**

Before storing the engine for more than a few months, remove any dirt on the machine, and:

1. Close the liquid withdrawal valve of the LPG fuel tank and start the engine to empty the fuels in fuel pipes. **[DF972-E2]**
2. Empty the gasoline fuel tank.
3. Loosen the drain screw of the carburetor float chamber using a screw driver to let gasoline out of the carburetor.

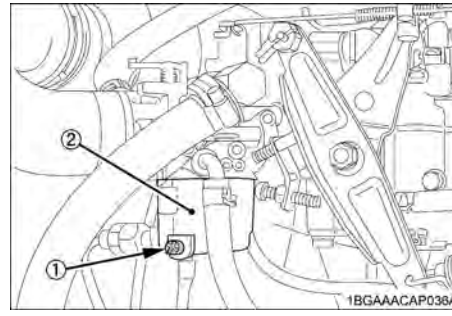

(1) Drain screw
(2) Carburetor

4. Drain the coolant in the radiator. Open the plug at the bottom of the radiator, and remove the pressure cap to drain coolant completely. Leave the plug open. Hang a note written "No coolant" on the pressure cap. Since water may freeze when the temperature drops below 0°C (32°F), it is very important that no water is left in the machine.

NOTE :

- When using anti-freeze, it is not necessary to take step "1" above.

5. Remove dirty engine oil, fill with new oil and run the engine for about 5 minutes to let the oil penetrate to all the parts.
6. Check all the bolts and nuts, and tighten if necessary.
7. Remove the battery from the engine, adjust the electrolyte level, and recharge it. Store the battery in a dry and dark place.
8. When the engine is not used for a long period of time, run it for about 5 minutes under no load every 2 to 3 months to keep it free from rust. If the engine is stored without any running, moisture in the air may condense into dew over the sliding parts of the engine, resulting in rust there.
9. If you forget to run the engine for longer than 5 to 6 months, apply enough engine oil to the valve guides and valve stem seals and make sure the valves work smoothly before starting the engine.
10. Store the engine in a flat place and remove the key from engine.
11. Do not store the engine in a place where has flammable materials such as dry grass or straw.
12. When covering the engine for storage, let engine and muffler cool off completely.
13. Operate the engine after checking and repairing damaged wirings or pipes, and clearing flammable materials carried by mouse.

TROUBLESHOOTING

The engine malfunctions can result from a large number of causes. The following describes symptoms that are encountered relatively more often than others, their major causes and remedies.

■ When it is difficult to start the engine

Cause	Countermeasures
Fuel doesn't flow.	* Check the fuel tank, fuel filter, fuel hoses and fuel pump. * As fuel will be filtered by the filter, if there should be water or other foreign matters on the filter, clean the filter.
Valve clearance is not as specified.	* Adjust valve clearance when the engine is cold.
Engine oil becomes thick in cold weather and engine cranks slow.	* Change grade of oil according to the weather (temperature).
Low compression	* Bad valve or excessive wear of rings, pistons and liners cause insufficient compression. Replace with new parts.
Battery is discharged and the engine will not crank.	* Charge battery. * In winter, always remove battery from machine, charge fully and keep indoors. Install in machine at time of use.
Clogged air cleaner	* Clean or replace.
Spark plug electrodes are wet with gasoline	* Dry electrode and restart.
Defective starter	* Repair or replace.
Defective main switch	* Repair or replace.
Defective vaporizer	* Replace.
Disconnection	* Check the wire harness.

■ When output is insufficient

Cause	Countermeasures
Compression is insufficient.	* Bad valve or excessive wear of rings, pistons and liners cause insufficient compression. Replace with new parts.
Fuel is insufficient.	* Check fuel system.
Overheating of moving parts	* Check lubricating oil system. * Check to see if lubricating oil filter is working properly. * Filter element deposited with impurities would cause poor lubrication. Change element. * Check to see if the clearance of bearing is within factory specs.
Valve clearance is not as specified.	* Adjust valve clearance when the engine is cold.
Air cleaner is dirty.	* Clean or replace.
Defective spark plug	* Clean or replace.
Defective ignition coil	* Replace.
Disconnection	* Check the wire harness.

■ When engine speed is insufficient

Cause	Countermeasures
Improper or defective spark plug	* Clean or replace.
Defective ignition coil	* Replace.
Defective throttle body	* Replace.
Breather tube has separated.	* Attach correctly.
Disconnection	* Check the wire harness.

■ When engine suddenly stops

Cause	Countermeasures
Lack of fuel	* Check the fuel tank and refill the fuel, if necessary. * Also check the fuel system for air or leaks.
Moving parts are overheated due to shortage of lubrication oil or improper lubrication.	* Check amount of engine oil with oil level gauge. * Check lubricating oil system. * Replace oil filter cartridge.
Clogged air cleaner	* Clean or replace.
Disconnection	* Check the wire harness.

■ When excessive black exhaust gas is observed

Cause	Countermeasures
Fuel system is bad.	* Check the fuel system.
Fuel is extremely poor quality.	* Replace fuel.

■ When white exhaust gas is observed

Cause	Countermeasures
Excessive engine oil	* Reduce to specified level.
Piston ring and liner worn or stuck	* Replace.
Defective valve stem seal	* Replace.

■ When lubricant oil consumption is excessive

Cause	Countermeasures
Oil leaking from oil seal, gasket, etc.	* Replace.
Defective valve stem seal	* Replace.
Piston ring and liner worn or stuck	* Replace.

■ When engine overheats

Cause	Countermeasures
Engine oil insufficient	* Check oil level. Replenish oil as required.
Fan belt broken or elongated	* Change belt or adjust belt tension.
Coolant insufficient	* Replenish coolant.
Excessive concentration of antifreeze	* Add water only or change to coolant with the specified mixing ratio.
Radiator net or radiator fin clogged with dust	* Clean net or fin carefully.
Inside of radiator or coolant flow route corroded	* Clean or replace radiator and parts.
Defective fan or radiator or radiator cap	* Replace defective parts.
Defective thermostat	* Check thermostat and replace if necessary.
Defective temperature sensor	* Check temperature with thermometer and replace if necessary.
Overload running	* Reduce load.
Head gasket defective or water leakage	* Replace parts.

NOTE :
- If the cause of trouble can not be found, consult your KUBOTA dealer.

SPECIFICATIONS

Model			WG972-E2	DF972-E2	
			Gasoline	Gasoline	LPG
Type			Vertical, Water-cooled 4 cycle		
No. of cylinders - bore x stroke		mm (in.)	3-ø74.5 x 73.6 (2.93 x 2.90)		
Total displacement		L (cu-in.)	0.962 (58.7)		
Brake horse power	SAE Gross intermittent	kW(HP) / min^{-1}(rpm)	24.2 (32.5) / 3600		23.1 (31.0) / 3600
	SAE net intermittent	kW(HP) / min^{-1}(rpm)	23.1 (31.0) / 3600		22.0 (29.5) / 3600
	SAE net continuous	kW(HP) / min^{-1}(rpm)	18.7 (25.0) / 3600		17.5 (23.5) / 3600
Max. torque	SAE net intermittent	N-m(ft-lbs) / min^{-1}(rpm)	68.6 (50.6) / 2400		64.6 (47.7) / 2400
Governor type			Centrifugal ball mechanical type		
Ignition system			Distributor-less solid stage type		
Fuel used			Unleaded gasoline		Commercial LPG
Lubricating oil capacity		L (US gals.)	3.4 (0.9)		
Starter			12 V x 1.0 kW		
Total dimensions (L x W x H)		mm (in.)	448 (17.6) x 402 (15.8) x 497 (19.6)		
Weight (Dry)		kg (lbs)	72 (159)		
Common tune up specification					
Adjustment of idle speed		min^{-1} (rpm)	1500 ± 100		
High idle setting		min^{-1} (rpm)	3850 to 3950		
Ignition timing		deg. BTDC	21° ± 2		
Spark plug type / Spark plug gap		mm (in.)	NGK BKR4E-11 0.6 to 0.7 (0.024 to 0.028)		
Intake / Exhaust valve clearance Check when engine is cold.		mm (in.)	0.165 ± 0.02 (0.0065 ± 0.00079)		

NOTE :
- Specifications are subject to change without notice.
- LPG regulator with vaporizer operates on a liquid withdrawal type system.

EXHIBIT 2

WSM

WORKSHOP MANUAL
GASOLINE,LPG, NATURAL GAS ENGINE

WG972-E2,DF972-E2, DG972-E2

Kubota

KiSC issued 06, 2009 A