Blackmer

Bulletin 500-004
Section: **500**
Effective: **August 2015**
Replaces: **NEW**

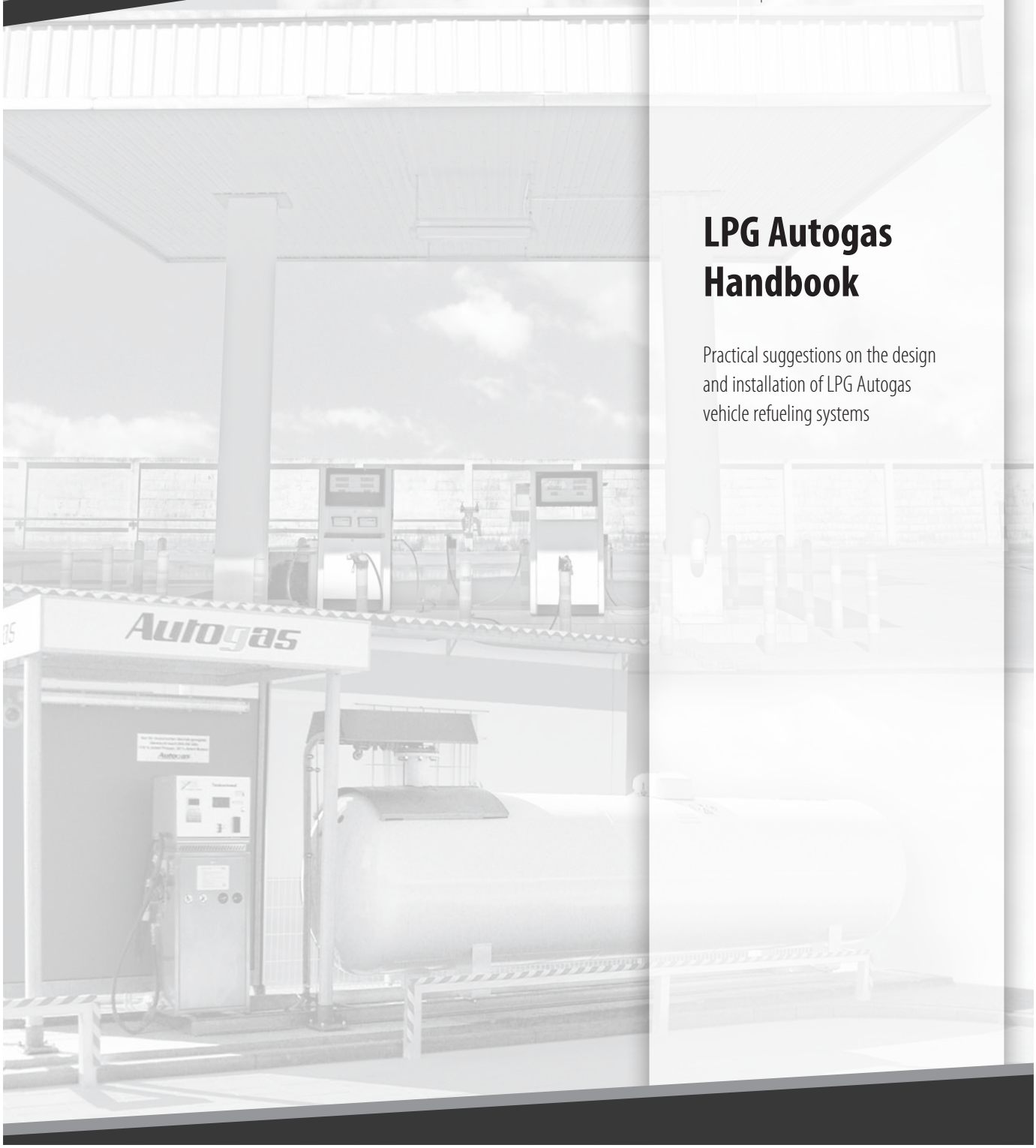

LPG Autogas Handbook

Practical suggestions on the design and installation of LPG Autogas vehicle refueling systems

Bulletin 504-004

Liquefied Autogas Handbook

This handbook is about Blackmer liquefied Autogas pumps, their installation and operation. It outlines practical suggestions and guidelines that can be used in the design, layout and troubleshooting of both new and older installations. It is not, nor is it intended to be, a treatise on the entire LPG industry. There are many excellent publications that cover in detail the various other specialized phases of this business.

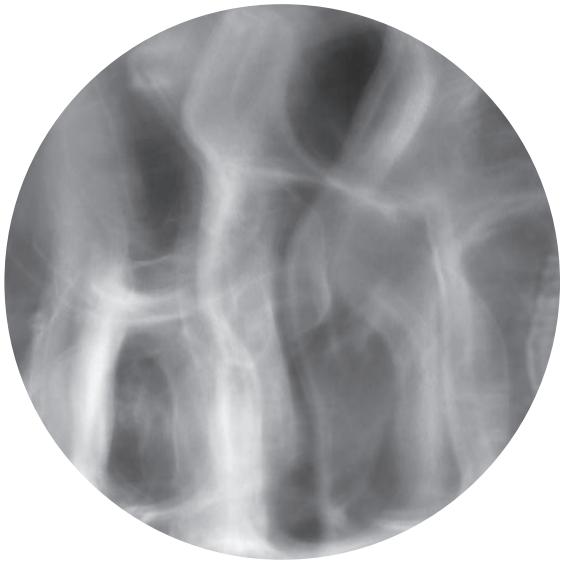

Before installing propane pumping equipment for Autogas stations, review the requirements of N.F.P.A. Pamphlet No. 58 "Standard for the Storage and Handling of Liquefied Petroleum Gases" and NFPA 30A "Code For Motor Fueling Dispensing Facilities And Repair Garages.

You can obtain a copy:
National Fire Protection Association
1 Batterymarch Park
Quincy, MA 02269-9101
Telephone: 1-800-344-3555
web: www.nfpa.org

This pamphlet is generally accepted by regulatory authorities and is the industry guide to safety in equipment and handling procedures. In addition, check state and local laws and ordinances on the subject.

blackmer.com

Information for all Blackmer products, both present and past models, is available at our website. Specification Sheets, Parts Lists, Instruction Manuals and more are all available worldwide 24 hours a day.

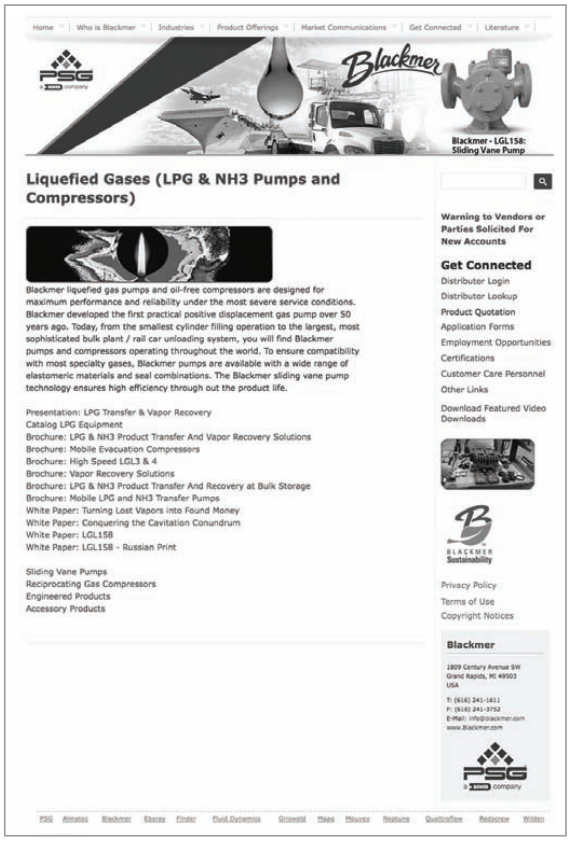

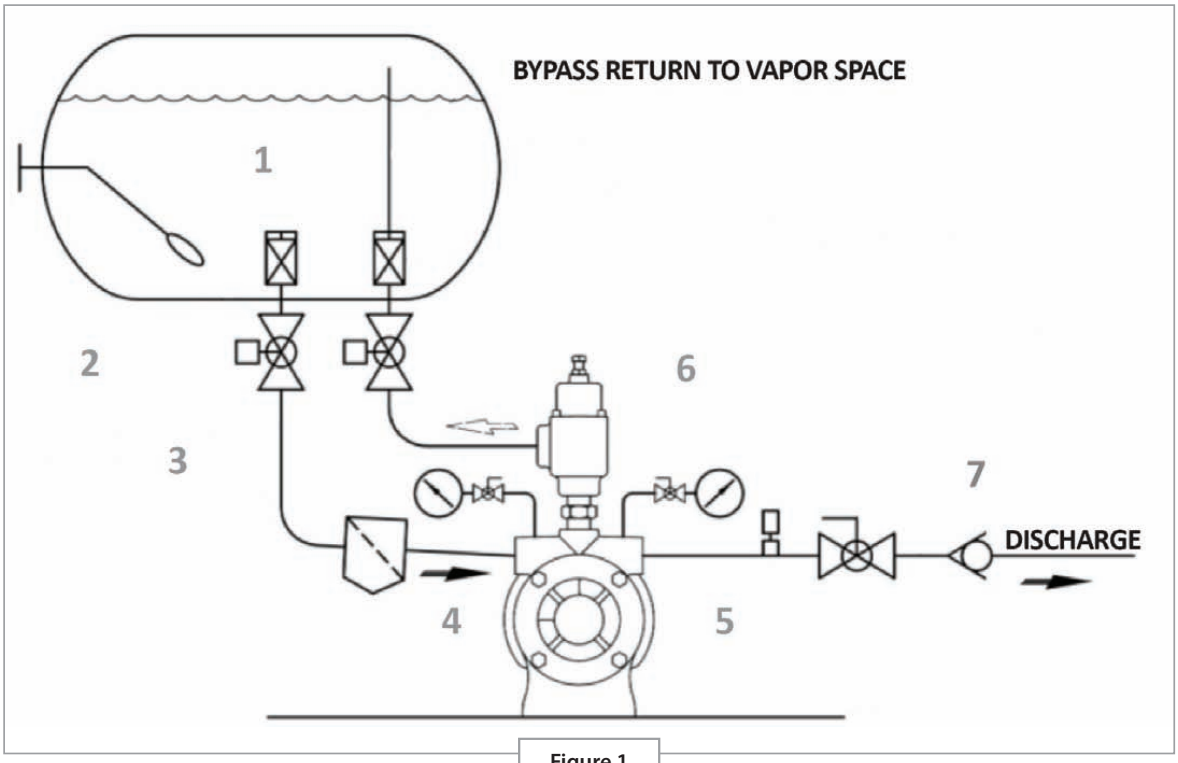

Figure 1

Table of Contents

About Blackmer 3
1. Fluid Properties and Characteristics 5
2. Tank Design and Selection 8
3. Tank to Pump Inlet Design 10
4. Pump Designs and Technologies 17
5. Motor Selection 19
6. Bypass Valve Piping System 20
7. Downstream/Discharge Components 22
Common Installation Questions 23
Troubleshooting 25
Appendix 26

About Blackmer®

In 1903, Robert Blackmer, inventor of the first Rotary Vane pump, successfully launched a new technology (sliding vane pumps) effectively setting valuable pumping standards for years to come for pump companies around the world. For more than a century, Blackmer has continued to strengthen its commitment of providing quality products to its valued customers.

Meeting customer's challenges through a combination of expertise, dedication and support, allows Blackmer to provide the most effective products and the information customers need to choose the right product for their applications. It is the people at Blackmer that make the company what it is today. With a diverse range of market segments and experts in the field, Blackmer takes great pride in its services and products available worldwide.

Blackmer's manufacturing facilities are fully equipped with the latest technology and trained technicians needed to provide products to meet the industry's highest global standards. Blackmer's research and design department works around the clock testing not only new products, but also changes and advancements made to existing products.

Experts in the field, Regional Managers, Product Managers and Product Specialists, are continuously providing one-on-one product training throughout the world. Blackmer believes strongly in its team, whose purpose is to service its customer's needs through years of experience and longevity in the workforce.

Blackmer has become a global company, supplying markets around the world with expert flow-technology applications. Blackmer is quick to respond to the industry's rapid advances, by constantly reengineering its products to include new innovations.

However, Blackmer is about more than the latest, cutting-edge technology. The employees at Blackmer work together as a team in order to meet customers' ever-evolving needs with keen knowledge and insight. Blackmer provides outstanding service that enhances its customers' business, from site training to expert engineering support. The customer is always the first priority at Blackmer.

Mission Statement

To be the Value Proposition Leader in strategically identified global applications.

- Blackmer will conduct business in compliance with the Dover Code of Conduct and Ethics
- Provide applications expertise, technical application and equipment selection technical assistance and customer care
- Responsiveness
- Product quality and product value

Products

Blackmer LG and LGL Sliding Vane Pumps

These ductile iron pumps, available in 1 in. to 4 in. sizes, are all UL listed for LPG, Butane and Anhydrous Ammonia Service. Models are available for motor fueling, cylinder filling, vaporizers, general transfer and truck loading/offloading.

Blackmer/Ebsray Regenerative Turbine Pumps

These ductile iron RC models come standard with C-face motor brackets that close couple to NEMA C-face motors and have 1" NPT inlet and outlet ports. Two pump sizes provide 15 and 25 gpm (58 and 94 lpm) flow rates and are UL listed for LPG Service. The EBSRAY regenerative turbine pumps offer a compact and low maintenance option for single and dual hose Autogas installations.

Blackmer and Ebsray Bypass Valves

All LPG pumps are to be fitted with a back-to-tank bypass valve. To serve that purpose, Blackmer and Ebsray bypass valves are ductile iron and available in 3/4 in. to 2 in. sizes.

1. Fluid Properties and General Characteristics of Liquefied Gas

LPG is an abbreviation for "liquefied petroleum gas" and encompasses several products in the hydrocarbon family; compounds composed of carbon and hydrogen of varying molecular structures. Propane and butane are the two best known of these hydrocarbons that are used as fuel in homes, businesses and industries. In the international markets, LPG predominantly refers to a propane-butane mixture. These mixes may vary in composition, from ones that are predominantly butane to ones in which propane is the principal constituent. In North American markets, LPG is typically referred to as Propane as this is the primary constituent.

LPG, whether butane or propane, is unique in that it can be transported and stored as a liquid, but when released it will vaporize and burn as a gas. LPG can also be easily changed from either liquid state or gas state. No other commercial fuel has these characteristics. Natural gas, for example, cannot be transported in a tank in any meaningful quantities unless it is either compressed to extremely high pressures or chilled to -259°F (-126°C), at which point it liquefies. Even when compressed, it contains only a fraction of the useful energy of the identical volume of liquid-state LPG.

When liquefied, LP gases are always at their boiling point at normal temperatures. The slightest drop in pressure or the least addition of heat will cause them to boil and give off vapor or gas. This characteristic becomes critical when considering the transfer of liquefied gases from one tank to another. Being a liquefied gas, LPG must be stored in an enclosed container under pressure. The fluid in a tank is in state of equilibrium, with the gas vapors on top of the liquid providing the tank pressure to keep the liquid from boiling.

Appendix A, "Properties of Liquefied Gases", is a chart outlining the physical properties of propane and butane. The specific gravities of the liquids are just over half that of water. This means a gallon of propane or butane weighs only half the weight of a gallon of water. Also, propane and butane have viscosity of about 0.1 centipoise, which make them approximately 10 times thinner than water. This property makes LPG a difficult fluid to pump since a low viscosity fluid is harder to seal and prevent pump slippage.

The single significant difference between propane and butane is their boiling points, the temperature at which each will vaporize. Butane boils at approximately +32°F (0°C), propane at -44°F (-42°C) at atmospheric pressure. Therefore, at 0°F (-18°C), butane will not vaporize at atmospheric pressure while propane will. Consequently, at any given temperature, the pressure for a propane vessel will be higher than a butane vessel. Refer to chart in the Appendix B titled, "Vapor Pressure of Liquefied Gases."

LPG is inherently a safe fuel. Two prime factors contribute to LPG safety; one is its narrow limits of flammability, the other is the fact that the container in which it is stored is extremely strong and airtight. If the confined gas cannot escape, it can't burn. LPG has narrower limits of flammability than most fuels. For propane, the respective limits are 2.4% and 9.6%. This means that when the concentration of LPG in air is less than about 2.4% or more than 9.6%, the mixture will not support combustion.

Properties of LPG

The following properties of LPG should be understood for the purpose of promoting safety in usage and for intelligent action in handling this fuel:

1. The gas or vapor is heavier than air.
2. The gas or vapor will diffuse into the atmosphere very slowly unless the wind velocity is high.
3. Open flames will ignite air-gas mixtures which are within the flammable limits.
4. Gas-air mixtures may be brought below the flammable limit by mixing with large volumes of nitrogen, carbon dioxide, steam or air.
5. Fine water sprays reduce the possibility of igniting gas-air mixtures.
6. The vapor pressure of this fuel is greater than gasoline. It is safely stored only in closed pressure vessels designed, constructed and maintained according to appropriate regulations and equipped with safety devices as required.
7. Liquid in open vessels will evaporate to form combustible mixtures with air, even if the ambient temperature is many degrees below the boiling point.
8. The rapid removal of vapor from the tank will lower the liquid temperature and reduce the tank pressure.
9. The liquids will expand in the storage tank when atmospheric temperature rises. Storage tanks must never be filled completely with liquid. Refer to NFPA 58 for storage tank filling density.
10. Liquid drawn from the storage tank will cause freeze burns on contact. This is due to the rapid absorption of heat by the liquid upon vaporization in the open.
11. Condensation will occur in gas (vapor) distribution lines when surrounding temperatures are below the boiling point of the liquid.
12. Liquefied petroleum gases are excellent solvents of petroleum products and rubber products. Special pipe joint compound and rubber substitutes are available for use in distribution.

Effect of Vaporization

Refer to Figure 2 for an illustration of the effects of vaporization on an underground and above ground tank applications. As the liquid level drops in the tank, the vapor above expands and its pressure drops. Immediately, the liquid in the tank begins to boil, creating vapor bubbles. Liquid entering the dip tube/inlet piping carries some of the bubbles with it. Each restriction in the pump inlet piping drops the pressure of the liquid-vapor mixture, causing the vapor bubbles to expand and causing more boiling and more vapor bubbles to form. In addition, a significant pressure reduction for lifting applications is due merely to the change in elevation from the tank fluid level to the pump inlet. All the vapor bubbles entering the pump are rapidly collapsed back into liquid when they move to the discharge side of the pump. LPG vapor occupies much more space when vaporized than in the liquid form. Therefore, a significant volume reduction occurs whenever a vapor bubble is collapsed on the discharge side of the pump. This explains why a pumping system never delivers as much actual liquid as the pump flow rating would indicate.

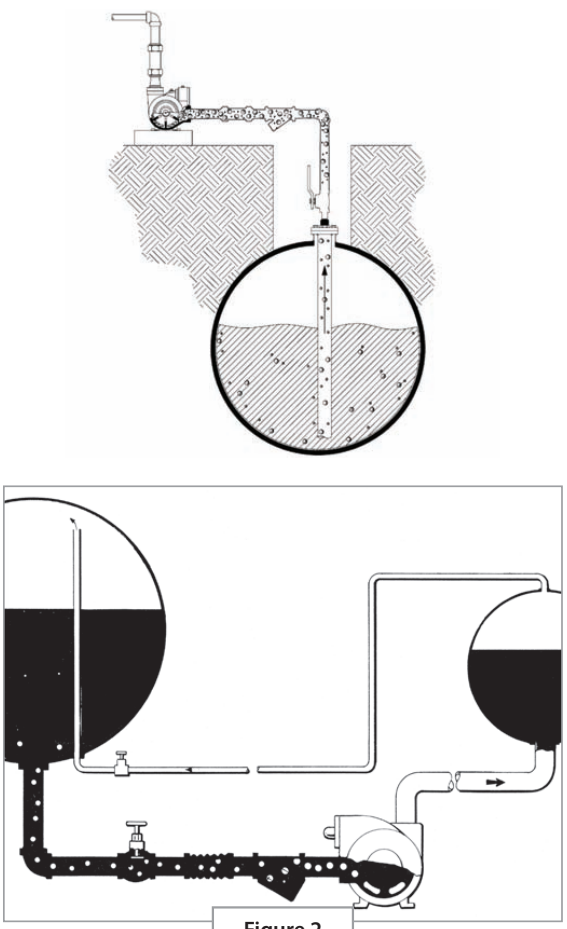

Figure 2

Net Positive Suction Head

Net Positive Suction Head Required (NPSHR) is the minimum inlet pressure required at the pump inlet to avoid excessive cavitation. The Net Positive Suction Head Available (NPSHA) must be greater than required NPSHR to prevent pressure at some regions in the pump suction area from dropping below the liquid's vapor pressure. If the inlet pressure is lower than the vapor pressure, vapor bubbles will form in the liquid. As the bubbles travel through the pumping chamber to the higher discharge pressure region, the bubbles implode and release high amounts of energy, commonly called cavitation. The collapse of the vapor bubbles causes pressure spikes, resulting in noise, vibration and damaged hardware.

In addition, vapor bubbles reduce a pump's capacity since the pumping chamber volume is being filled with a mixture of vapor and liquid. The vapor bubbles will occupy a volume, which under normal conditions, is filled by liquid. Although PD pumps are less susceptible to vapor lock than a centrifugal pump, under severe conditions, PD pumps will vapor lock as well.

NPSH becomes more of a concern in certain applications such as pumping from an underground tank, cold weather pumping and running a pump at motor speed.

All typical propane transfer applications operate with some degree of vapor in the suction line. As observed in LPG fluid transfer, the pump will deliver more flow when recirculating to the supply tank versus delivering to a cylinder or receiving tank.

This reduced flow rate is due to the increased amount of vapor in the suction line during the delivery operation. As the supply tank liquid level drops, the tank pressure drops and the liquid boils, creating vapor bubbles. The vapor bubbles travel along the inlet piping to the pump. As the fluid moves through the pumping chamber, the high-pressure discharge fluid collapses the vapor bubbles. The implosion of the vapor bubbles creates the noise that characterizes cavitation.

NPSH required is normally determined with room temperature water per the Hydraulic Institute's standards. However, a typical LPG installation operates with less NPSHA than when testing with water. Other pump manufacturers, both centrifugal and positive displacement (PD), have reported the same findings.

These general facts have been established from years of experience regarding PD pumps for LPG applications:

1. PD pumps can handle some entrained vapors without adverse effect to pump service life.
2. A flooded inlet condition NORMALLY provides sufficient head for a PD pump to operate. However, poor inlet piping can and will cause many pump problems.
3. Pumps handling LPG will operate with less NPSHA than would be required for water.
4. Even pumps with properly designed suction piping may have a negative NPSHA.
5. Use a larger size pump to compensate for the lower efficiency at cold temperatures.
6. Keep discharge pressures as low as possible by using vapor return lines.

Cold Weather Pumping

As the ambient temperature and product temperature drop below 40°F (4°C), a noticeable reduction in pump capacity is observed. An installation located in a cold weather region must consider this capacity reduction when selecting the proper pump size. As shown in Figure 3, pump efficiencies are significantly lower in a cold environment.

There are several guidelines that can minimize the effects of cold weather pumping:

1. Avoid fittings in the inlet such as tees, globe valves, plug valves, angle valves, check valves and standard port ball valves that collectively exceed 2 PSI inlet pressure drop.
2. Use as few fittings on the inlet piping as possible.
3. Use an inlet pipe one size larger than the pump inlet port.
4. Install the pump as far below the source/supply tank as possible.
5. Install the pump as close to the source/supply tank as possible and avoid long horizontal runs.
6. Avoid low spots in the inlet piping where vapor bubbles can accumulate.
7. Use a larger size pump to compensate for the lower efficiency at cold temperatures.
8. Keep discharge pressures as low as possible by using vapor return lines.
9. Slope or angle the inlet piping from the supply tank down toward the pump. This will allow entrained vapor bubbles to move back toward the supply tank.

Note: Pumping butane is more difficult than pumping propane, it is similar to pumping propane at a colder temperature. The same pump and piping set at a given temperature will perform worse on butane than on propane.

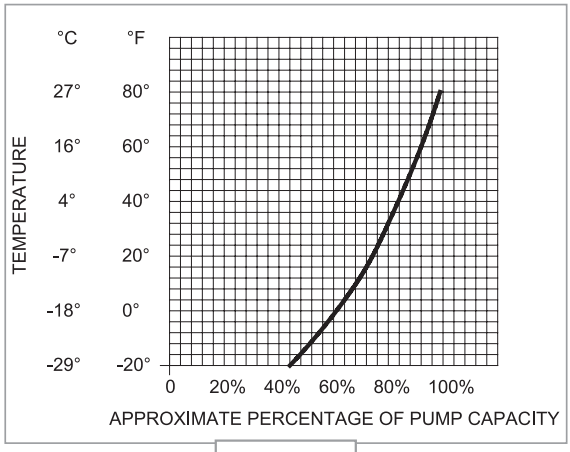

Figure 3

2. Tank Design and Selection

Above Ground Tanks

Many Autogas refueling sites in North America utilize above ground tanks, often 1,000 gallon (3,785 liter) capacity because they are readily available. However, experience has shown that larger tanks, 2,000 gallon (7,570 liter) capacity, provide better overall operation than smaller 1,000 gallon tanks. When considering the size tank to be used, users need to determine their annual usage and then size the tank accordingly. From a pumping perspective, larger tanks will provide better conditions than smaller.

It is also good practice to elevate the tanks so that the bottom of the tank is at least 4-6" above the pump inlet – higher would be better. (Refer to NFPA 58 prior to installation to confirm maximum allowable height.) Elevated tanks allow room for piping transition and still allow for level or downward sloping pipe from the tank toward the pump. It also allows better valve and component access for maintenance and emergency response.

Tank Size

The size of the supply tank has a significant effect on overall system performance. As soon as liquid is removed from a supply tank, the remaining liquid in the tank will begin to vaporize. As liquid is removed, the pressure in the tank drops slightly. To maintain equilibrium, the fluid will begin to vaporize or boil. If liquid is removed too rapidly, significant vaporization and boiling will occur. Liquid in the tank will actually cool, reducing the equilibrium temperature and increasing the vaporization rate.

This vaporization imposes a rather rigid limit on the maximum delivery rate that can be achieved with ANY size tank. The maximum withdrawal limit in standard, non Autogas LPG tanks is about 2½% of the tank capacity per minute for pumps mounted below the tank. However, for high-pressure Autogas systems that often utilize smaller tanks, a 2% withdrawal limit is more realistic and practical. Therefore, the supply tank should be at least 50 times larger than the nominal flow-per-minute rating of the pump.

For example, if a tank has a capacity of 2000 gallons (7,570 liters), the pump should be rated for a maximum of 40 GPM (150 LPM). Under-sizing a tank can be a costly mistake. It will cause inadequate delivery rates due to liquid vaporization and boiling, pump damage due to cavitation and potentially lost business if the system cannot deliver product. When sizing a tank, error on the side of caution to ensure a trouble-free system.

Many Autogas system integrators prefer to use 1,000 gallon (3,785 liter) tanks, following the limits mentioned about, the maximum withdrawal rate on a 1,000 gallon tank would be limited to 20 GPM (75 LPM). Over-speeding the pump or using a larger pump will have little or no effect once this barrier has been reached. If a larger pump is used or a higher flow rate is attempted, the liquid will vaporize in the inlet piping and cause pump cavitation and potentially vapor lock the pump. Often when multiple refueling hoses are used, flow rates higher than 20 GPM are required. If that is the case, then it is good practice to use larger supply tanks.

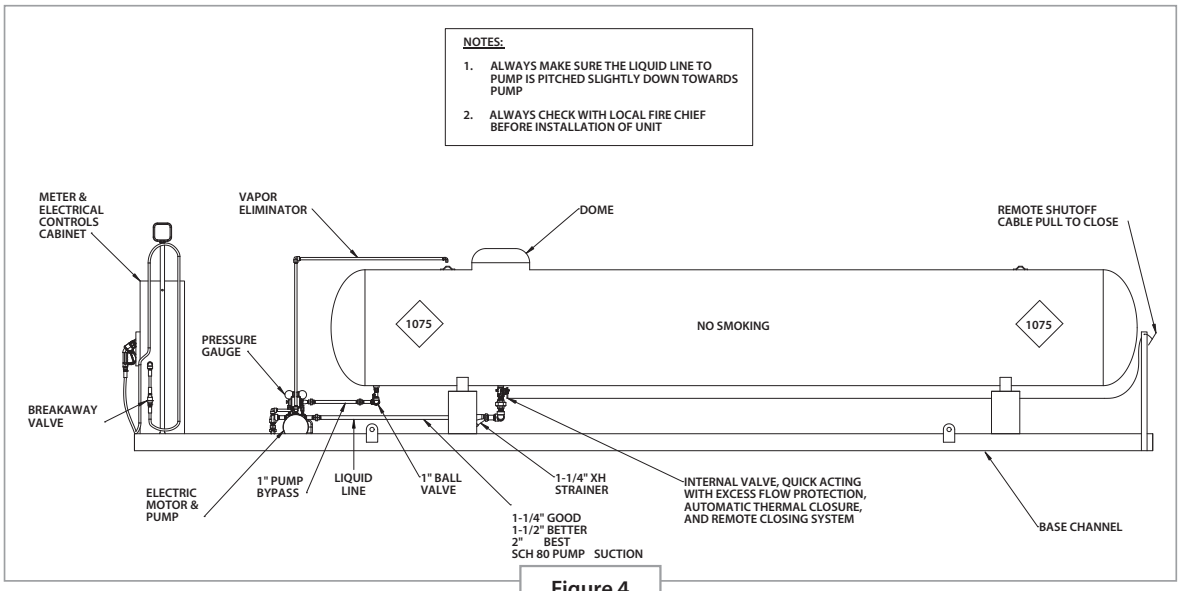

Figure 4

Underground Tanks

This section presents practical solutions to the problem of attempting to lift LPG from underground tanks with a pump. The drawings in this guide portray only those components pertinent to the topic being discussed.

All the information presented in previous sections on Fluid Properties and Effects of Vaporization and above ground tank design apply to pumping from Underground Tanks.

- Vaporization of fluid at the pump inlet will cause reduced flow.
- Temperature and propane/butane mixture ratios will also affect delivery rates.
- Reducing the temperature of the fluid or increasing the percentage of butane in the fluid will reduce the vapor pressure in the storage tank.
- Lower vapor pressure results in the formation of larger vapor bubbles since gas volume is inversely proportional to pressure.

Testing has shown that 1,000 gallon underground tanks loose NPSH at about 95-110 PSI tank pressure. Lower pressures often cause pumps to vapor lock, regardless of the technology used. In view of these operating issues, 1,000 gallon tanks are not practical for underground installations as they will only yield approximately 200-300 gallons of useable capacity. Hence, 1,000 gallon underground tanks are not recommended.

When pumping from an underground tank, the change in elevation from the fluid level in the tank to the inlet of the pump will cause significant vaporization of the fluid in the inlet piping. This happens because the pump reduces the pressure below the liquid vapor pressure which causes the fluid to vaporize in the inlet pipe. For this reason alone, it is impossible to prevent vaporization at the inlet of the pump for an underground tank installation. However, there are many things that can be done to minimize these effects. The following bullet points will help to optimize the performance of an underground tank application. Refer to figure 2 as a guide to a typical underground tank application.

- **Vapor Removal During Startup**
  - Sliding-vane positive-displacement pumps, such as Blackmer's LGL pumps, are capable of moving vapor as well as liquid. This enables the pump to "self-prime" and establish liquid flow. However, when a pump is operating without liquid, excessive heat and wear will result. (See the Bypass Valve Piping section regarding the Ebsray VRS - Vapor Removal System.)
- **Inlet Piping Length**
  - Keep the inlet piping as short as possible.
  - Install the pump directly over the tank and as close to the ground as possible. This will eliminate the overall volume of vapor that the pump must remove during startup.
- Minimize the Number of Fittings
  - Every fitting, valve, and piece of straight piping causes a pressure drop. Use a minimum number of fittings on the inlet side of the pump. Eliminate all possible elbows in the inlet piping by moving the pump so that they will not be necessary. Sizing the inlet piping one or two pipe sizes larger than the inlet of the pump will reduce the overall pressure loss of the inlet piping.
- **Strainers**
  - Suction strainers should not normally be used on underground tank installations as they create a significant pressure drop during priming and normal operation. Contaminates in a tank should settle to the bottom. In a properly designed system, the end of the dip tube should be placed two to three inches (five to eight centimeters) above the bottom of the tank. In applications with known high levels of contaminates, install a strainer that is one or two sizes larger than the pump inlet to minimize the pressure drop.
- **Install Vapor Excess Flow Valve**
  - The vapor excess flow valve provides a path to return the vapors to the tank during startup. When a liquid flow of approximately three GPM is established, the vapor excess flow valve will close. When piping the return line from the vapor excess flow valve to the tank, ensure that there are no low spots where liquid can collect. If liquid is present in the vapor return line, excessive pressure will be required to push vapors out of the pump. Pipe the vapor return line to the vapor space in the tank, NOT to the liquid space of the tank or to the inlet of the pump.
- **Install the pump directly over the tank**
  - Keep the pump as close to the ground as possible and use the minimum number of fittings.
  - Use inlet piping one or two sizes larger than the pump inlet connection and keep the inlet velocity below 3 ft/sec.

For additional information on proper installation of pumps on Underground Tanks, please refer to Blackmer's Underground Tank Application Guide, Bulletin 500-002.

3. Tank to Pump Inlet Design

Minimize Line Losses

Pipe and fitting size are critical to pump suction, thus a properly designed system will perform better. In general, lower pressure losses will require less power to drive a pump and result in reduced start up cavitation, vapor lock and unintended excess flow valve closures. Typically, pressure drop from tank to pump inlet should be less than 2 psi.

Installing piping or fittings that are too small will increase the system differential pressure, cause vaporization and inlet restrictions which will seriously degrade system performance. In general, tank liquid supply valves and pump supply piping and components should be equal to, or greater in size than the pump inlet size. Eliminate any unneeded fittings, particularly on the liquid supply line, as this is where most of the pressure losses and vaporization will occur. Use low restriction fittings and valves, which will minimize pressure losses and always ensure all strainer elements are clean. Minimize use of elbows, tees and branches on pump inlet piping. Use 45˚ elbows where possible. Use of plugged tees as elbows is not recommended unless absolutely necessary for additional or future connections. While minimizing the length of pump inlet piping is desirable, making it as "as close as possible" to the tank outlet can result in excessive restrictions if extra elbows and/or fittings are used.

Suction Line Piping

One of the most important considerations for a proper installation is the suction line piping. A properly designed suction line will minimize vapor formation by limiting the line restrictions and preventing vapor pocket formations. In light of the tendency of LPG liquid to vaporize, the design of the intake piping plays a critical role in the efficiency of every system.

Following are some good design practices for LPG suction line installations. Adhering to these guidelines will promote longer pump service life.

1. Inlet piping from the tank to the pump should be as short as possible, with the following conditions:

   A. The pipe where connected to the pump inlet, should be the full inlet diameter, straight pipe, with no fittings or components which could cause turbulence of vaporization.

   B. This final section of straight pipe should be a minimum of 10 times the pump inlet diameter (i.e., 2" inlet = 20" of straight pipe), and threaded or flanged directly to the pump inlet, with no additional fittings. **Figure 6**

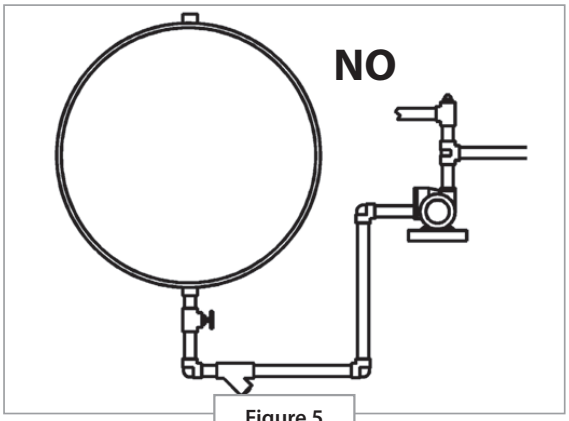

Figure 5

2. The pump should always be at a lower level than the tank's lowest liquid level. Install the pump to eliminate any low spots or loops in piping. **Figure 5**

3. Shield the pump and inlet piping from direct sunlight to reduce priming issues. Painting the suction lines white will help reduce the radiant heat absorption. **Note:** aluminum paint absorbs infrared heat at a higher rate than pastel colors or white.

4. Suction line pressure losses must be less than 2 psi (0.14 bar). To minimize pressure losses in the suction line, use low restriction type valves and fittings. Also, long sweep radius elbows are preferred. If possible, changes in pipe size should be made vertically, where the pipe first exits the tank. This type of installation allows vapor to flow up and the line size then remains constant to the pump. Where possible, limit elbows in the inlet stream, to no more than a total of 180˚ of bends (i.e., 2 x 90˚ elbows, or 1 x 90˚ and 2 x 45˚ elbows).

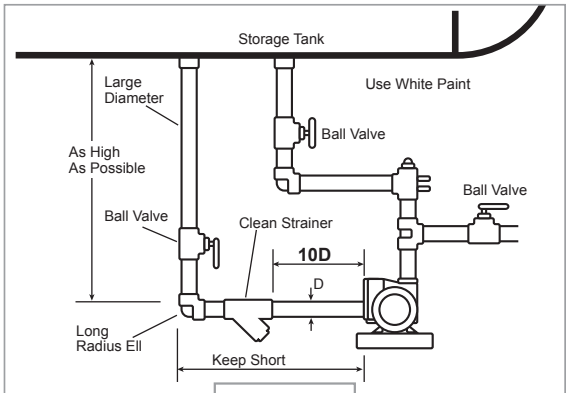

Figure 6

5. The nearest fitting or strainer should be a minimum of 10 pipe diameters from the pump inlet. Where possible, limit elbow connections to a maximum of 3 elbows. Use full port ¼ turn valves for component isolation. It is a good practice to install 3 full port ball valves, isolating the pump, bypass,

strainer and flex hose for maintenance, with a bleeder valve installed for section depressurization. These are the most likely components to be serviced, and can thus be easily accessed with minimal loss of product.

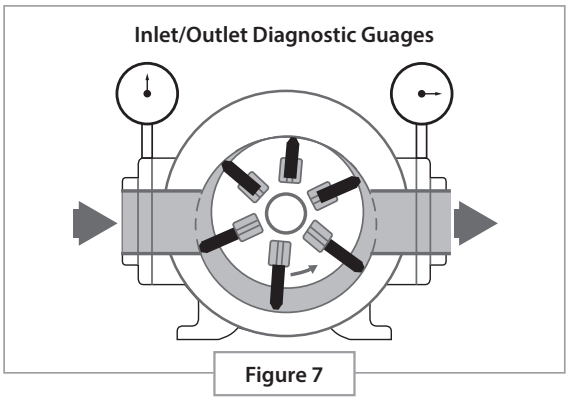

Figure 7

6. It is highly recommended that inlet and outlet gauges be installed for diagnostic use and for confirming differential pressure to adjust bypass pressure. Gauges may be installed directly on gauge ports on the pump. **Figure 7.** Good quality glycerin filled gauges, of at least 400 psi (27.5 bar) will yield the best results. Isolation valves may be used on the gauge stem.

7. Check and clean the inlet strainers regularly. First cleaning after installation, or opening the system for maintenance, should be within 1000 gallons of startup. Placing a small magnet in the strainer can help trap rust and ferrous material, and extend pump and meter life.

8. Use only eccentric reducers with the flat side up when changing pipe size horizontally. **Figure 8**. Concentric reducers may be used if reducing line size vertically, and as close as possible to the internal valve outlet. The use of bushings is not recommended. **Figure 9**.

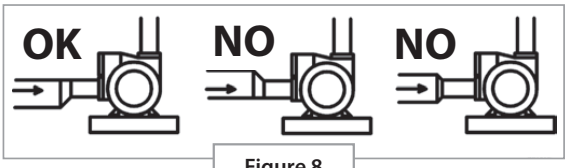

Figure 8

9. Do not supply a pump from a liquid opening in the tank which is a smaller diameter than the pump inlet. Pumps should always have a supply line equal to or greater in size, from the tank. Where utilizing a smaller tank opening to supply a larger inlet pump, **DO NOT** make the transition up in size at pump inlet, or within 10 pipe diameters in length. This can cause a pressure drop and vaporization as the liquid will expand where the line size increases, causing a pressure drop. This is especially problematic when the pump starts after sitting for a period of time. An increase in size from the tank internal valve, should be made as close as possible to the internal valve and vertically in orientation, if possible. **Figure 10**.

10. Long inlet lines should be avoided, even when they are so large that they have practically no friction loss. At night or in cold weather, the liquid will cool. Then, as the day warms or, as sunlight shines on the pipes, the cool liquid will be heated, causing some liquid to be vaporized. This vapor will decrease the pump's flow rate and increase the noise and vibration. To minimize this problem, inlet lines should be level or sloped upward toward the supply tank so vapors can flow back into the tank. **Figure 11**.

11. Avoid up-across and down pipe loops where vapors can accumulate. **Figure 5**.

12. When supplying two or more pumps from the same liquid opening of the tank, ensure that the same length of pipe with the same number of bends is supplied to each pump. The manifold needs to be adequately sized to provide sufficient flow to both pumps. This will minimize the possibility of the flow path "favoring" one pump over the other, which could result in one pump being starved of liquid when both pumps are running.

    Note: If both pumps are to run at the same time, the common piping must be sized to handle the capacity of both pumps. **Figure 12**.

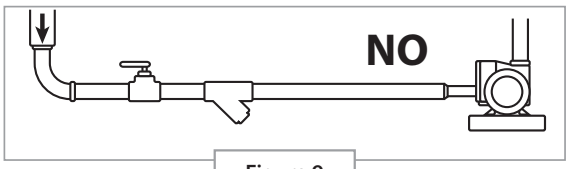

Figure 9

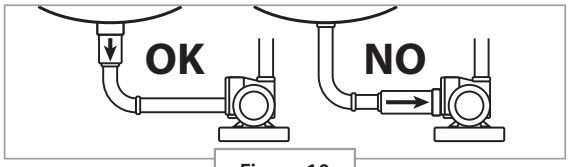

Figure 10

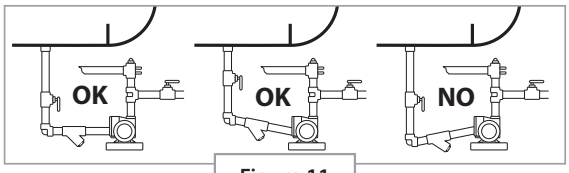

Figure 11

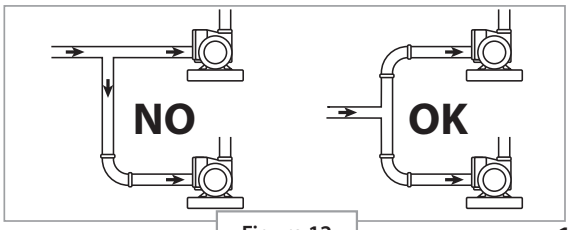

Figure 12

Following are some simple inlet piping installation guidelines:

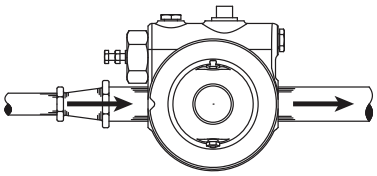

NO
Don't restrict the inlet line.

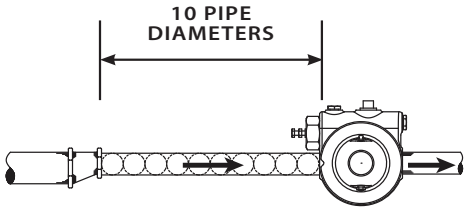

YES
Use inlet line same size or larger than pump inlet connection.

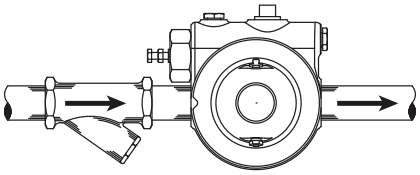

NO
Don't install restrictive fittings close to pump inlet.

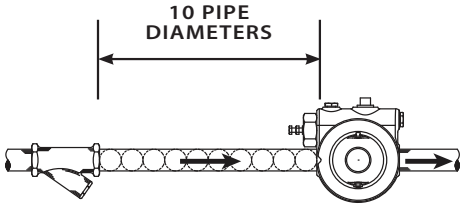

YES
When possible, install fittings at least 10 pipe diameters upstream of the pump inlet.

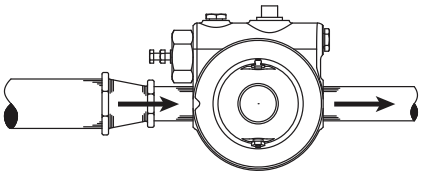

NO
Don't use concentric reducers in the pump suction.

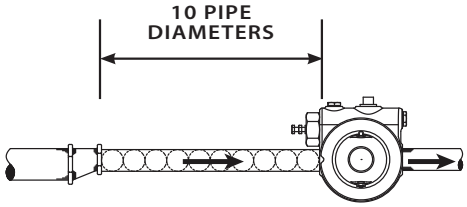

YES
Use eccentric reducers in the pump suction. Install the reducer with the flat side up.

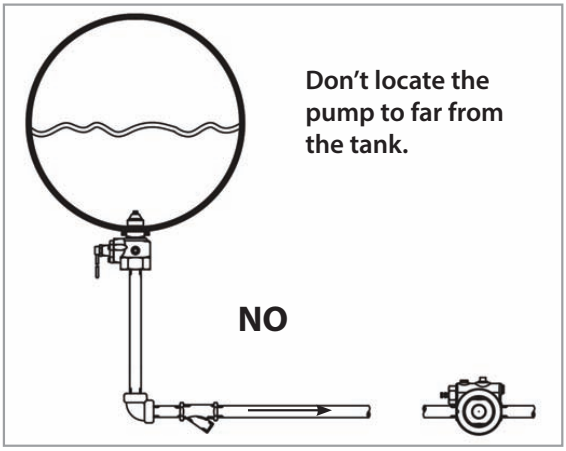
Don’t locate the pump to far from the tank.
NO

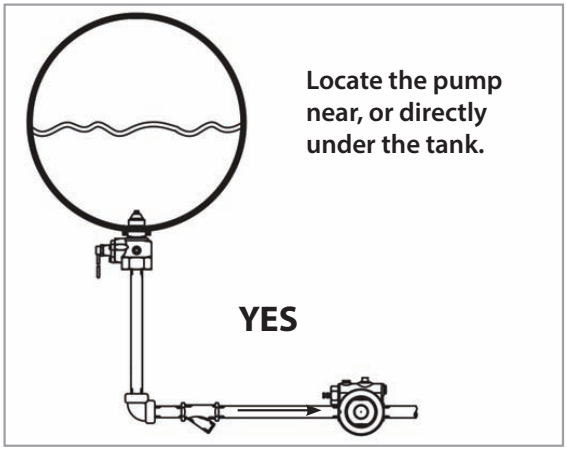
Locate the pump near, or directly under the tank.
YES

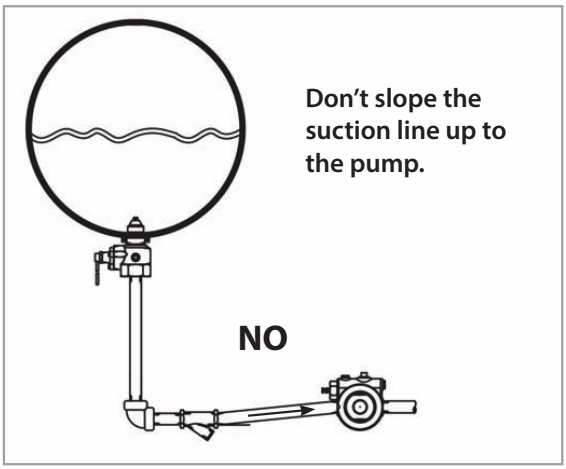
Don’t slope the suction line up to the pump.
NO

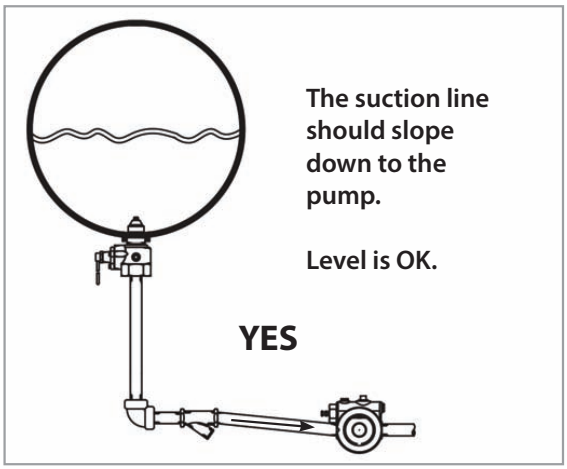
The suction line should slope down to the pump.
Level is OK.
YES

Pump Priming

Cavitation and Vapor Lock Issues

High differential pressure Autogas pumps tend to accelerate to maximum RPM quickly, which can drop inlet pressure and cause vaporization, leading to potential cavitation and vapor lock. This can be even more notable when equipment limitations require the use of an undersized liquid withdrawal valve (i.e., 1-1/4" internal valve supplying a 2" inlet pump). There are optional methods to assist and help prevent vapor lock issues.

One method to help quickly eliminate vapors is to use a bypass valve with a bleed hole. All Blackmer® bypass valves and Ebsray® RV18CBS (Constant Bleed System) contain this feature. It should be noted that a small amount of liquid will bleed through this hole during normal pumping operations.

If there are excessive vapors to evacuate or an underground tank is being used, the Ebsray RV18VRS (Vapor Removal System) bypass valve can be used. This bypass valve features a "ball check" to quickly allow vapor removal. **Figure 20**. The ball check acts like an excess flow valve allowing vapors to escape, but once the pump primes and is pumping liquid, the liquid pressure closes the ball completely. The bypass valve then acts like a standard relief valve with no constant bleed.

Another option to minimize or prevent vapor lock is with the installation of a "vapor purge manifold." This is essentially a low flow rate excess flow valve, installed in a manifold which will bypass the bypass valve, on startup. If vapors are present when the pump is turned on and the pump speed increases to normal operating speed, the discharge pressure of the pump will not be sufficient to open the bypass valve. Vapor will be routed through the excess flow valve, until the pump primes, vapor is eliminated, and liquid discharge is at the set differential pressure. Once full pressure liquid is applied to the excess flow valve and the bypass valve, the excess flow will check, and the bypass will function normally. **Figure 13**.

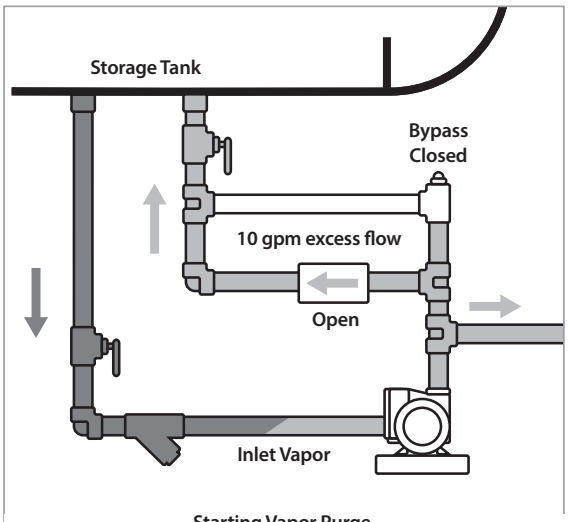

Starting Vapor Purge,
vapor bypassing through excess flow valve

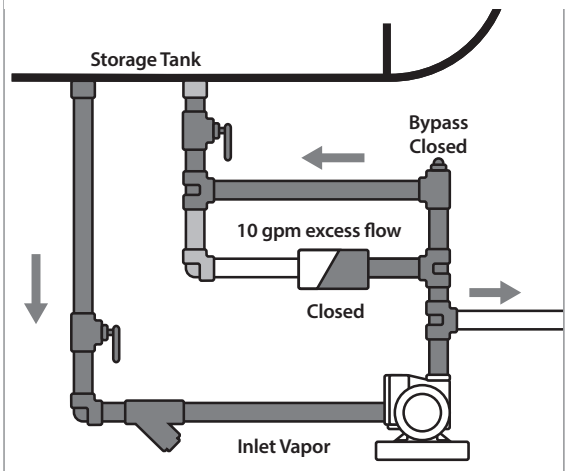

Pump Fully Primed, excess flow checked,
liquid DP flowing/controlled through bypass

Figure 13

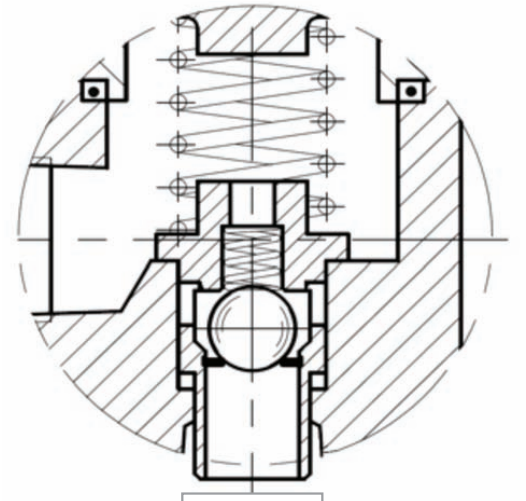

Figure 20

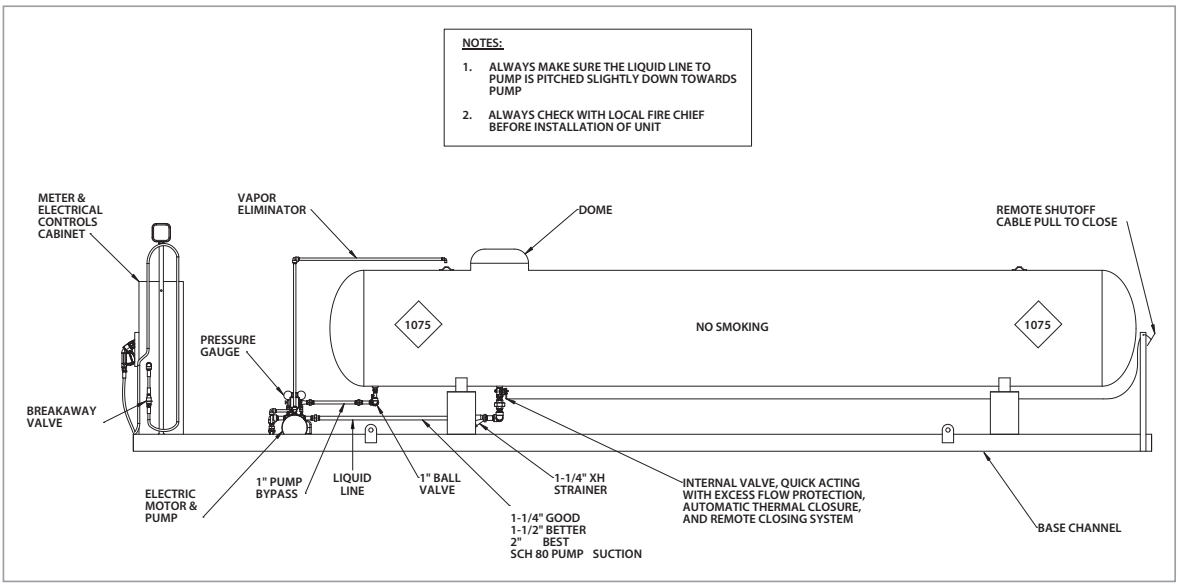

Calculating Inlet Piping to the Pump

Use the following to assist with calculating inlet piping restrictions:

Answer the following questions:

Tank Size:	
Diameter of Tank Opening:	
Internal Valve – Brand and Size:	
Piping Diameter:	
Total Length of Straight Inlet Piping:	
Number of 90°Elbows:	
Number of 45° Elbows:	
Number of T-Fittings Used as Elbows:	
Number of Union/Couplings:	
Number of Reducers:	
Number and Type of Control Valves:	
(Ball Valve, Gate Valve, full port?)	
Type of Strainer (Y or T Strainer):	
Size of Strainer:	
Length of Flex Pipe:	
Pump – Brand, Model and Size:	
Expected Flow Rate:	

Example #1 – 1.25" Piping

Tank Size:	**1,000 Gallon**
Diameter of Tank Opening:	**1.25 Inch**
Internal Valve – Brand and Size:	**1.25 Inch = 70'**
Piping Diameter:	**1.25 Inch**
Total Length of Straight Inlet Piping:	**12' total length**
Number of 90°Elbows:	**1 = 4.5' of pipe**
Number of 45° Elbows:	**0 (1 = 4' of pipe)**
Number of T-Fittings Used as Elbows:	**1 = 8' of pipe***
Number of Union/Couplings:	**2 = 1'**
Number of Reducers:	**1 = 38' of pipe**
Number and Type of Control Valves:	**1 Ball = 0.5'**
(Ball = 0.5', Globe = 35', Gate = 3')	
Type of Strainer (Y or T Strainer):	**Y same size = 25'**
(1 Y same size as pipe = 25', 1 Y Next size larger = 16')	
Size of Strainer:	**1.25"**
Length of Flex Pipe:	**1.5' = ~3'**
Pump – Brand, Model and Size:	**LGL156**
Expected Flow Rate:	**22 GPM**

Total equivalent of straight pipe is 162'. Pressure drop is 3.5 PSI/100' @ 22 GPM on 1.25" pipe. This equals 5.6 PSI. This pressure drop exceeds 2 PSI inlet pressure drop. 22 GPM also exceeds the 2% withdrawal rate.
This tank will not work properly and is NOT recommended.
** T-Fittings are NOT recommended.*

Example #2 – 1.5" Piping

Tank Size:	**2,000 Gallon**
Diameter of Tank Opening:	**1.5 Inch**
Internal Valve – Brand and Size:	**1.5 Inch = 70'**
Piping Diameter:	**1.5 Inch**
Total Length of Straight Inlet Piping:	**12' total length**
Number of 90°Elbows:	**1 = 5' of pipe**
Number of 45° Elbows:	**0 (1 = 4' of pipe)**
Number of T-Fittings Used as Elbows:	**1 = 9' of pipe***
Number of Union/Couplings:	**2 = 1'**
Number of Reducers:	**1 = 22' of pipe**
Number and Type of Control Valves:	**1 Ball = 0.5'**
(Ball = 0.5', Globe = 35', Gate = 3')	
Type of Strainer (Y or T Strainer):	**Y same size = 25'**
(1 Y same size as pipe = 25', 1 Y Next size larger = 16')	
Size of Strainer:	**1.5"**
Length of Flex Pipe:	**1.5' = ~3'**
Pump – Brand, Model and Size:	**LGL156**
Expected Flow Rate:	**22 GPM**

Total equivalent of straight pipe = 147.5'. Pressure drop is 1.1 PSI/100' @ 22 GPM on 1.5" pipe. This equals 1.62 PSI pressure drop. OK – under 2 PSI inlet pressure drop. 22 GPM does not exceed the 2% withdrawal rate. **This system should perform well.** From the above example, any pipe diameter larger than 1.5" will not exceed the 2 PSI inlet pressure drop.
** T-Fittings are NOT recommended.*

Example #3 – 2" Piping

Tank Size:	**1,000 Gallon**
Diameter of Tank Opening:	**1.25 Inch**
Internal Valve – Brand and Size:	**1.25 Inch = 70'**
Piping Diameter:	**1.25 & 2" Inch**
Total Length of Straight Inlet Piping:	**12' total length**
Number of 90°Elbows:	**1 - 2" = 6' of pipe**
Number of 45° Elbows:	**0 (1 - 2" = 2.5' of pipe)**
Number of T-Fittings Used as Elbows:	**1 - 2" =12' of pipe***
Number of Union/Couplings:	**2 - 2" = 1'**
Number of Reducers:	**1 = 22' of pipe**
Number and Type of Control Valves:	**1 - 2" Ball = 0.5'**
(Ball = 0.5', Globe = 35', Gate = 3')	
Type of Strainer (Y or T Strainer):	**Y same size = 25'**
(1 Y same size as pipe = 25', 1 Y Next size larger = 16')	
Size of Strainer:	**2"**
Length of Flex Pipe:	**1.5' = ~3'**
Pump – Brand, Model and Size:	**LGL156**
Expected Flow Rate:	**22 GPM**

Total equivalent of straight pipe = 154'. Pressure drop is 0.4 PSI/100' @ 22 GPM on 2" pipe. This equals 0.7 PSI pressure drop. OK – under 2 PSI inlet pressure drop. 22 GPM does exceed the 2% withdrawal rate.
This installation may work on warm days, but would be questionable in cold weather installations.
** T-Fittings are NOT recommended.*

4. Pump Designs and Technologies

Blackmer® LG and LGL Sliding Vane Pumps

These ductile iron pumps, available in 1 in. to 4 in. sizes, are all UL listed for LPG, Butane and Anhydrous Ammonia Service. Models are available for Autogas motor fueling, cylinder filling, vaporizers, and general transfer.

Pumping Principles & Technologies

There are two basic types of pumps: positive-displacement (such as Blackmer sliding vane pumps) and dynamic or momentum-change pumps (such as Ebsray regenerative turbine pumps). There are several billion of each type in use around the world today.

Positive-displacement (PD) pumps have a moving boundary which forces fluid along by volume changes. A cavity opens and fluid is admitted through an inlet. The cavity is then closed and fluid is moved through to an outlet. PD pumps may be classified into two basic groups: reciprocating and rotary. Both sliding vane and gear pumps are considered rotary pumps.

All PD pumps provide a nearly constant flow rate over a wide range of pressure rises, while the dynamic (centrifugal) pump gives uniform pressure rise over a range of flow rates. A PD pump is appropriate for high pressure rise and low flow rate and its greatest advantage is the capability to handle a limited amount of entrained vapors.

Blackmer Sliding Vane pumps are manufactured and designed specifically for LPG applications. A sliding vane pump consists of a slotted rotor attached to a rotating shaft. Vanes are fitted in the rotor slots and freely slide in and out during operation. An eccentric cam profile is machined into the liner, forming the pump chamber.

At the intake port, fluid is drawn into the pumping chamber, which is formed by rotor and liner surfaces. A volume of fluid, trapped between two vanes, is pushed along the pumping chamber. At the outlet port, the vanes slide back into the vane slot and the fluid is pushed out the discharge piping.

Blackmer LGL pumps utilize patented cavitation suppression liners to help reduce the effects of cavitation and entrained vapors in LPG systems.

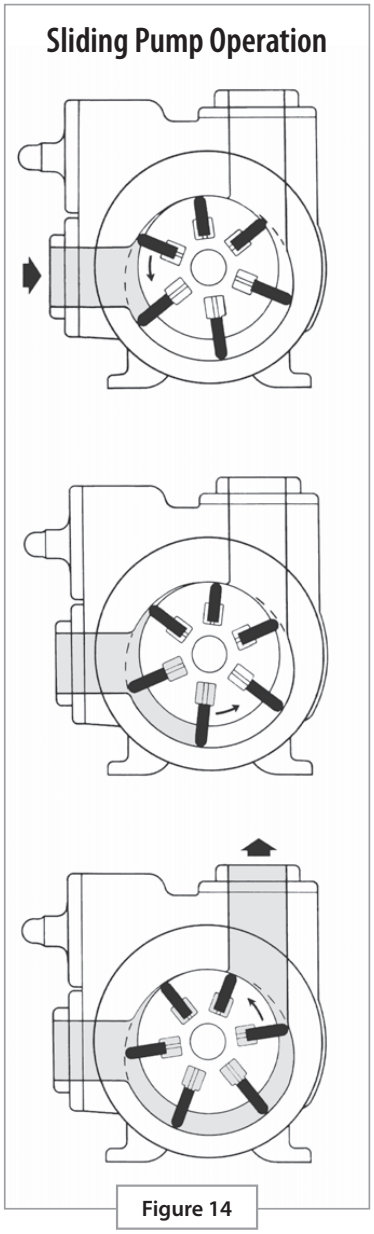

Figure 14

Blackmer®/Ebsray®

Regenerative Turbine Pumps

Blackmer / EBSRAY Regenerative Turbine pumps come in various sizes, currently offered with 1" inlet and outlet. RC20 pumps offer flow rates up to 15 GPM (58 lpm) and the RC25 offers flow rates up to 25 gpm (94 lpm). Both pumps can operate up to 175 PSI (12 bar) differential pressure. The EBSRAY regenerative turbine offers a compact and low maintenance option for single and dual hose installations.

The regenerative turbine pump design is very unique and works on a different principle than PD pumps. They are ideal for handling clean liquids at or near their boiling point e.g., LPG, CO2, hot water (boiler feed). It is a rotodynamic pump (as opposed to a PD pump) and as such sits alongside the centrifugal family of pumps. However, its performance characteristics (H/Q and power curve) more closely resemble that of a PD pump.

The Regenerative Turbine pumps suit requirements for high differential pressures from 70 – 220 PSI (5 – 15 bar), with flow rates from 5 – 53 GPM (20 – 200 lpm) and low viscosity liquids such as LPG (< 1.0 cSt).

The impeller is a rotating, non-contacting, free-wheeling disc which has many small buckets or cells (typically about 60) on its periphery. When liquid enters the suction port it is picked up by the impeller and instantly accelerated around in the narrow hydraulic channel (casing volute) surrounding the cells. Kinetic energy is imparted to the liquid being flung outwards by the centrifugal force from the liquid in the teeth cells, while circulating radially around the channel. See **Figure 15**.

The resultant spiraling or 'winding-up' of the liquid many times (at sonic speeds) within the one revolution incrementally builds energy/pressure. This 'winding-up' or incremental regeneration of the numerous small liquid cells creates the differential pressure capability of the pump - hence the name Regenerative Turbine.

The regenerative turbine has a unique ability to withstand cavitation and will operate without vibration & noise under extremely low NPSHa conditions. The pumps offer multi-stage performance from a single stage impeller. The pumps are a compact design with less rotating and wearing components.

The hydraulically balanced impeller floats axially on the shaft, effectively in a liquid sandwich between the cover and the body. This design ensures very long service life of hydraulic components and limits axial load and thrust on shaft and bearings.

Regenerative turbine pumps also offer excellent priming and vapor handling abilities on LPG Autogas installations. Autogas systems must be properly sized for the application, taking into consideration tank size, hose count and desired flow rate. Installing larger, oversized regenerative turbine pumps on small Autogas tanks can cause problems, especially when the gas level in the tank is low. Pumps can be operated cavitation-free at motor speeds up to 3800 rpm without compromising pump life while at the same time offering smooth pulsation-free discharge and 'soft' hydraulic characteristics.

General comments on pumping assemblies:

- Dispenser providers and users need to evaluate the filling requirements and select the appropriate pump to meet those requirements.
- Pump curves are available to show flow rate, differential pressure and horsepower requirements under various operating conditions to meet the system needs.
- Most vehicles require a minimum differential pressure of 125 psi to fill tanks.
- Pump inlet strainers should be installed to prevent any foreign debris from entering the pump and located a minimum of 10 pipe diameters from the pump inlet.
- Minimum recommended mesh size is 80 mesh.

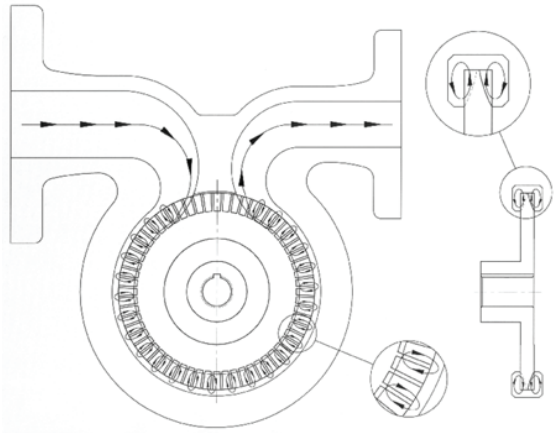

Figure 15

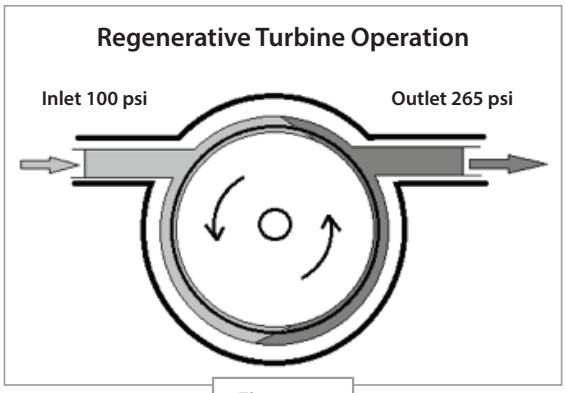

Figure 16

5. Motor Selection

This section is a guide to assist in motor selection and sizing of electric motors used to drive Autogas pumps. Only qualified personnel trained in the safe installation and operation of the equipment should install the unit. When connecting a unit to power please follow NEC (National Electric Code) and any other (country specific) local electrical codes that may apply during installation. Verify all electrical information prior to startup of unit. This section is not intended to be used as a reference or authority for design, construction, or application of electrical systems.

Motor Wire Sizing:

Table 1 lists motor sizes and the respective recommended wire size depending upon the distance between the source and the load. As the distance increases from the source to the load, the voltage drops, caused by the resistance and reactance of a particular size of the wire. The wire must be sized properly to allow for this voltage drop to remain within an acceptable range. This is especially important for single phase motor applications. The following guidelines are minimums.

Phased Power:

It is recommended to use three phase power where applicable. The three phase motor is a simpler design, more efficient by design, and also less costly than single phase motors. The three phase motor allows for a higher starting torque, smoother operation, and allows the use of a smaller wire size over greater distances. Single phase power can be converted to three phase power by using a phase converter, which is readily available and inexpensive.

Single phase motors often require the use of heaters and drains due to condensation build up in the motor. These issues often make three phase motors a better choice to provide long trouble free service.

Table 1: Recommended Motor Wiring *

Motor				Recommended Wire Size, AWG		
HP	Motor Phase	Voltage	Full Load Amperes	Length of Run in feet		
				0-100	To 200	To 300
3	1	120	42.5	4	2	1/0
		240	21.25	10	8	6
	3	240	12	12	12	10
		480	6	12	12	12
5	1	120	70	3	1/0	2/0
		240	35	8	6	4
	3	240	19	12	10	8
		480	9.5	12	12	12
7.5	3	240	27.5	10	8	6
		480	13.75	12	12	12

System Design:

Systems shall be designed according to NFPA standards and local codes. It is recommended that a Blackmer or Ebsray manufactured bypass valve be used in the system as they are designed to allow the optimum system performance and stability. Below is a list of informational bulletins that also guide installation of a Blackmer pump and bypass valve.

Application Bulletin 500-001: Liquefied Gas Handbook
Installation, Operation, and Maintenance 501-K00: LGL150 Series Pumps
Installation, Operation, and Maintenance 501-B00: LGL1.25 & LGL1.5 Series Pumps
Installation, Operation, and Maintenance 505-A01, A02, A03: Bypass Valves
Installation, Operation, and Maintenance 551-A00: RC20 & RC25 Series Pumps
Installation, Operation, and Maintenance 551-E00: RV18 Bypass Valves

6. Bypass Valve Piping System

All Autogas liquefied gas systems must be fitted with a separate bypass valve piped back to the vapor space of the supply tank. **(See Figures 6 & 13)**

If a bypass piping system is not present, fluid will recirculate within the pump. This recirculated liquid will rapidly heat up and vaporize. The pump may run completely dry, or begin to cavitate, greatly decreasing vane and seal life. A bypass line routed to the suction line will have the same effect and **MUST NOT** be used. A back-to-tank bypass line extends the recirculation loop allowing the recirculated liquid to cool. The back-to-tank bypass line may go either to the bottom of the tank or the top of the tank but should **ALWAYS** be routed to the tank vapor space. If the bypass line goes to the bottom of the tank, ensure that there is an internal stand pipe to the tank vapor space. Bypass return to the liquid space of a tank can cause undesirable back pressure on the bypass and pump.

Bypass and meter vapor return lines should **NOT** be connected together, as bypass liquid under pressure could flow back and adversely affect meter life and performance. Run each return line to a dedicated and unrestricted opening in the tank. When not dispensing and returning full flow to the supply tank, the bypass and return piping must be capable of returning the full flow rate of the pump. This will generally require a minimum ¾" or 1" bypass circuit to the tank vapor space. While "combination" valves can be used to accommodate both, they are not recommended.

The bypass valve return-to-tank line must **NOT** have any restrictions which could adversely affect, limit or block the unrestricted vapor clearing function during pump priming. The bypass piping return line must not have low spots that can collect liquid and increase return line pressure. The return piping must be level or go up to the vapor space of the supply tank. **Figure 17**. The bypass piping return line must be sized to be able to handle the full flow capacity of the pump when the system is in full bypass mode. It is good practice to use the same size piping as the bypass opening. i.e. use 1" piping when using a BV1 or RV18CBS2 bypass valve.

For pumps with an internal relief valve, (most PD and sliding vane pumps) the external bypass valve must be set at least 25 psi (1.7 bar) lower than the pump's internal relief valve setting. This will ensure the external bypass valve opens first. The pump's internal relief valve should open only as an emergency protection device to protect the pump. If used, the pump's internal relief valve routes discharge fluid back to the pump inlet, which will quickly cause internal wear on the pump.

Blackmer® and Ebsray® offer bypass valves for both Blackmer Sliding Vane and Regenerative Turbine pump models. The BV must be sized and selected to match the system. Do not use an existing bypass on a pump upgrade without confirming that it has the correct pressure range for the new valve application.

The Bypass valve **MUST** be mounted vertically. Horizontal mountings may affect the bypass operation and vapor removal which will result in poor differential pressure stability. **Figure 18**.

Bypass valves shall be sized and adjusted so the maximum pressure of the system does not exceed the lowest service pressure rating of any component used in the delivery system.

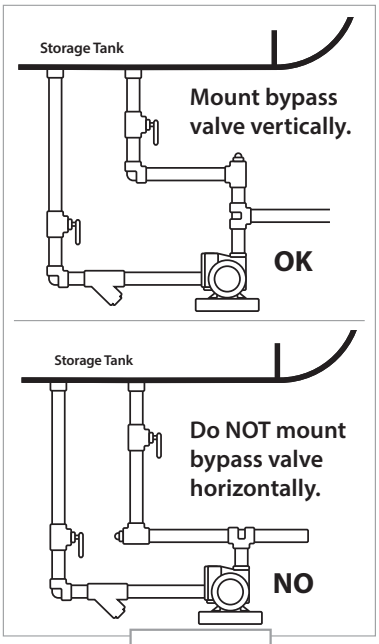

Figure 18

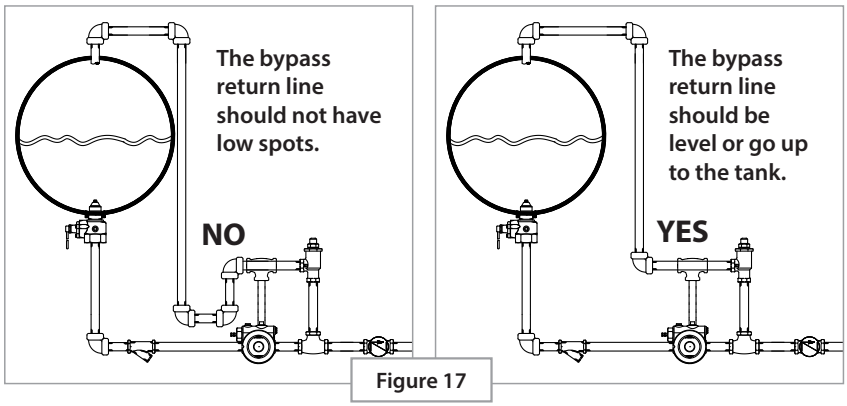

Figure 17

Blackmer®/Ebsray®

Bypass Valves

As mentioned above, all LPG pumps are to be fitted with a back-to-tank bypass valve returned to the supply tank vapor space. To serve that purpose, Blackmer and Ebsray offer a variety of bypass valves, all with ductile iron construction. Bypass Valves are intended to enable control and setting of pump and system differential pressures only. They are spring-actuated devices that by design cannot be positively shut-off.

Blackmer offers sizes various sizes – 0.75, 1, 1.25, 1.5 and 2 inch. All Blackmer and Ebsray Bypass Valves are listed by Underwriters' Laboratories for liquefied petroleum gas (LPG) service.

The Ebsray Models RV18 Bypass Valves have 1" NPT tapped ports and are offered with two configuration options.

1. **Constant Bleed System (CBS)** option **(Figure 19)** provides for controlled 'bleed-off' of vapor, enhancing self-priming and vapor clearing capabilities of the pump. **NOTE:** All Blackmer bypass valves use a similar hole to both equalize pressure and "bleed off" vapors.

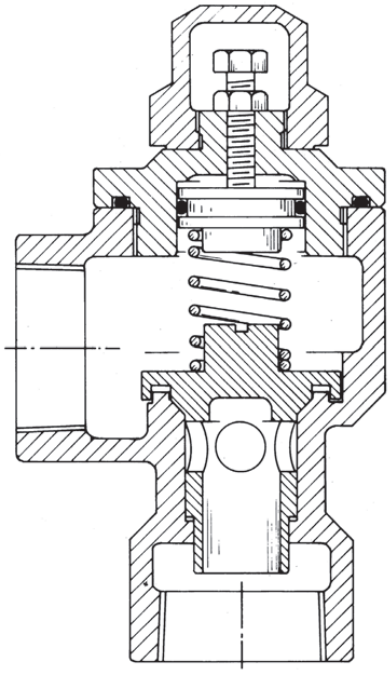

Figure 19

2. **Vapor Removal System (VRS)** option **(Figure 20)** provides rapid flow-through of vapor until liquid reaches the valve and then closes off the vapor orifice for maximum pump efficiency and flow rate. i.e. fulfills an excess-flow valve type of function. **NOTE:** once the orifice is closed, the valve operates like a standard bypass valve with no liquid bleeding past the orifice.

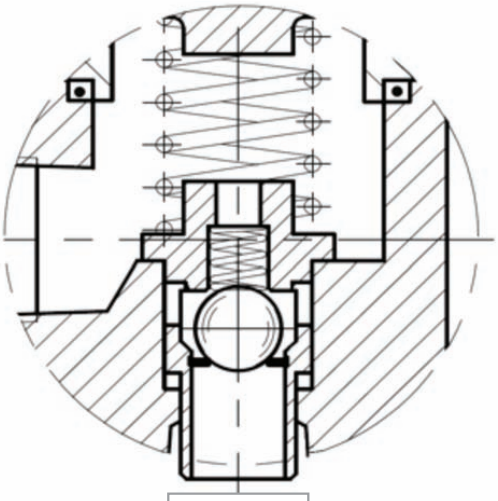

Figure 20

The Ebsray RV Model No. Code on the Nameplate identifies the valve type and spring fitted to the Bypass.

Example: RV18CBS2-023-<u>02</u>U01
02 is the Spring Code

RV18 Springs		
Spring Code	**Working Differential Pressure Range**	**Maximum Differential Pressure at the Rated Maximum Flow**
01	80 - 138 PSID (5.5 – 9.5 bar)	152 PSID at 53 US GPM (10.5 bar at 200 LPM)
02	87 – 196 PSID (6.0 – 13.5 bar)	210 PSID at 53 GPM (14.4 bar at 200 LPM)

Ebsray bypass valve are not preset at the factory. All bypass valves must be set and verified at the installation site under normal operating conditions. Consult Bypass Valve IOM's to properly set and adjust the BV pressure setting.

7. Downstream/ Discharge Components

Blackmer does not design, install or sell Autogas systems. Please follow dispenser manufacturer's instructions and guidelines for proper dispenser installation and use as well as all federal, state and local codes and regulations.

The following are common discharge components used on Autogas systems:

- Discharge piping, valves and fittings
- Bypass Valve and piping
- Dispenser cabinet
- Dispenser Meter and Display Head
- Electrical Requirements
- Hose and Nozzle Assembly
- In-line fuel filter
- Installation foundation

Discharge piping, valves and fittings. Typically, piping in dispenser cabinets are A53 Grade B or better, Schedule 80 or approved equivalent materials. Threaded fittings are of forged steel, brass or other materials approved for use with propane. Full port ball valves are best for propane service. Internal valves, excess flow valves and back check valves must be installed in appropriate locations and in accordance with federal, state and local codes and regulations. It is good practice for the pump inlet and outlet to have isolation full port ball valves.

Bypass Valve and Piping see Section 6 – Bypass Valve Piping System, **Page 18**, for comments on bypass valve installation, sizing and use.

Dispenser cabinets are constructed of nonflammable, noncombustible materials such as coated steel, stainless steel, aluminum or equivalent materials. They must meet all federal, state and local regulations applicable at the installation site. Typically, access panels are lockable to prevent tampering and are permanently base mounted.

Dispenser Meter and Display Head normally have a digital display that provides gross or net volumes. Meters must be sized to meet a minimum capacity and sufficient to meet the overall performance standards. Where required, temperature compensation is provided that meets all federal, state and local codes and regulations. Meters often are provided with a secondary temperature thermometer well for testing/proving (calibrating) the meter. There are two methods of temperature compensated dispensing:

- Electronic dispensing systems which use pulse transmitters
- Mechanical temperature compensation without pulse

Meter accuracy and operation are in accordance with federal, state and local codes and regulations for retail sales and/or custody transfer and they are inspected prior to operation to ensure compliance with each individual state Weights and Measure standards applicable to the installation site.

Dispenser displays indicate gallons or liters dispensed with either a mechanical or electronic register and may include alpha numeric keypads for ease of entering data.

Electrical Requirements see Section 5 – Motor Selection, **Page 17**, for comments on electrical requirements. Dispenser electrical components must meet all necessary federal, state and local codes and regulations for delivery of propane in a safe, reliable manner. Each dispenser manufacturer provides electrical wiring instructions for their cabinets. These directions must be followed. As mentioned in Section 5, distance must be considered when selecting electrical service wire size to meet necessary voltage and amperage requirements of electrical components.

Hose and Nozzle Assembly. Hose assemblies used in the USA are UL listed and marked with "LP-GAS 350 PSI WP, 1750 burst pressure". According to NFPA 58, maximum length is 18 feet (5.4 meters). The hose assembly requires a UL 567 compliant hose breakaway device.

The fueling nozzle is a gas pump style nozzle normally supplied with a 1 ¾" ACME quick-acting shutoff nozzle that is compatible with the dispensing device being used. There are several manufacturers that supply fueling nozzles and fittings.

In-line fuel filters are normally supplied that are capable of filtering particles measuring 5 microns. Filters should be placed after the pump to filter the stored fuel prior to entering the vehicle.

Installation foundations should be mounted on a concrete or masonry foundation unless it is part of a complete storage and dispensing unit supported on a common base to prevent uneven settling and stress on piping.

Common Installation Questions:

If a dispenser is mounted remotely from the tank, where should the pump be mounted - closer to the tank or the dispenser?

- The pump should always be mounted close to the supply tank. The pressure output of the pump can better accommodate the downstream back pressure from a remote dispenser than it can "pull" from a supply tank a long distance away. Proper pump selection, bypass valve, line sizing, and system layout can accommodate multiple hoses and dispensers, sometimes even exceeding 150 feet (43 meters). It is recommended to select a pump with 10-20% more flow rate capacity than the combined flow rate of all dispensers/hoses in the system. This will ensure sufficient volume in the discharge piping for each hose when in simultaneous use. For example:
  - **Example #1:** 1 dispenser, 1 hose, 50' (15 meters) from the pump, LPI school buses filling at 8-12 gpm (30-45 lpm) per hose. Use a pump with a minimum of 15 gpm (58 lpm) flow rate and 150 psi (10 bar) differential pressure ability.
  - **Example #2:** 1 dispenser, 2 hose, 100' (30 meters) from the pump, LPI school buses filling at 8-12 gpm (30-45 lpm) per hose. Use a pump with a minimum of 30 gpm (110 lpm) flow rate and 150 psi (10 bar) differential pressure ability.
  - **Example #3:** 2 dispenser, 2 hoses each, 50' (15 meters) from the pump, LPI school buses filling at 8-12 gpm (30-45 lpm) per hose. Use 2 pumps (each pump supplying 2 hoses) with a minimum of 30 gpm (110 lpm) flow rate and 150 psi (10 bar) differential pressure ability.

Should the pump discharge line size and vapor return size from the pump be changed if the dispenser is mounted a distance from the pump?

- **Yes.** Line sizing is important when the dispenser is mounted remotely from the tank and pump. Typically, the following should be considered:
  - **Dispenser 25'** (7.5 meters) or less from pump – Pipe size from pump to dispenser: ¾" minimum and ½" minimum vapor return line
  - **Dispenser 25-50'** (7.5 – 15 meters) from pump – Pipe size from pump to dispenser: 1" minimum and ¾" minimum vapor return line
  - **Dispenser 50-100'** (15 – 30 meters) from pump – Pipe size from pump to dispenser: 1.25" minimum and 1" minimum vapor return line
  - **Dispenser greater than 100'** (15 meters) from pump – Pipe size from pump to dispenser: 2" minimum and 1.5" minimum vapor return line

Will downstream components affect pump performance?

- Yes – but in different ways. Pressure drops over pipe distance just like suction piping. All fittings in the system (elbows, unions, valves, filters, etc.) effectively add additional length. Many Autogas vehicles now require a minimum of 125 psi (8.6 bar) differential pressure to reliably fill under all ambient conditions. So a system set for 135 psi (9.3 bar) at the bypass valve by the pump, may only deliver 110 psi (7.6 bar) at the dispenser 100 feet (30 meters) away with multiple couplings, unions, valves and fittings in between. To minimize friction loss over distance, the use of wide radius "sweep" elbows and welded pipe will yield better performance than the disturbance from threaded NPT connection and common elbows. As in suction piping, use **ONLY** full port ball valves.

What happens if the pump sits idle for long periods, especially when the dispenser is remotely mounted?

- It is very common for most of the gas to vaporize in both the discharge and suction piping when the pump shuts down for a period of time. This can cause problems on startup, as well as introduce vapor to the dispenser meter, making it work harder and/or vapor lock. To help resolve this problem, use internal valves on all tank openings and keep them closed when not in use. The excess flow mechanism in the valve will act as an internal pressure relief, and naturally may open to allow vapor to return, but it will slow the rate at which the fuel vaporizes. The use of the Blackmer and Ebsray bypass valves with the constant bleed feature will help speed pump priming. If there is an excessive amount of vapor to be removed, the Ebsray RV18VRS bypass valve will allow the vapor to be removed even faster. Removing the vapors in the pumping system quickly will drop the pressure to allow liquid from the tank to quickly supply the pump. If a VFD (Variable Frequency Drive or AC Drive) is used to power the pump, either used as a phase convertor, or as a motor controller, it can usually be programmed to make a slow ramped speed of the motor or "Soft start". This will slow the initial pump speed and how fast the motor/pump come up to normal operating speed. This will also help with displacing vapor and priming, especially in underground tank applications.

What can be done if a pump frequently vapor locks when using tank internal valves on the pump supply line and bypass valve return line – especially after sitting idle for some time?

- The use of internal valves in **ALL** system openings in the tank (pump supply, bypass return and vapor return from the dispenser meter) is recommend for extra safety, especially if the valves only open when the pump is turned on by the dispenser, and kept closed when not in use. However, when this is done, a time delay relay **MUST** be installed on the motor starter circuit so that the internal valves fully open allowing for vapor to return to the tank unrestricted, and a full supply of liquid to prime the pump. Typically, this is done by starting the pump 5-10 seconds after the internal valve is opened, depending on the distance from the tank to the pump and from the pump to the dispenser. Some dispenser manufacturers offer station control panels, which integrate the dispenser, internal valve and pump motor control, and have this time delay function built in.

What can be done if an application requires a 7.5 hp motor, but the site only has single phase power? Is there a solution for this?

- **Yes** – the use of a rotary phase converter (VFD) work very well to make reliable 3 phase power from typical 208/230 single phase power. VFD's are an inexpensive option if the unit will be mounted inside a building. However, note that it is important for motors over 3 hp, that the VFD drive be DOUBLE rated for horse power. i.e. for a 5 hp motor - use a 10hp VFD drive. For a 7.5 hp motor - use a 15 hp drive. VFD's should **NEVER** be mounted outside unless they are in an enclosure specifically rated for drives and inverters. These enclosures usually have ventilation and cooling fans and a different type of paint finish to reflect and insulate from heat. Consult an experienced VFD/Pump distributor or Installer, or a pump VFD control panel manufacturer. Failure to properly size and install a VFD, or a rotary converter, may result in premature drive or motor failure. Please note: the motor selected must be an "Inverter Duty" or "VFD rated" motor, or a shaft grounding brush system must be installed.

The customer wants to have redundant pumps, so that they have a backup, in case one fails. Are there any special considerations for this?

- Many fleets are used to redundancy, as a fleet simply cannot operate very long without refueling capability. So a second "back-up" pump is a good idea. However, several things should be considered.
  1. Both pumps should have identical plumbing, equal in all respects for both suction side and discharge side piping. It is critical that the suction piping does not "favor" one pump over the other.
  2. It is a good idea to have a bypass for each pump but they should be installed in such a way, that one can be isolated from the other, but can work with either pump.
  3. It is good practice to occasionally run both pumps to ensure that the secondary pump will run as expected when needed. This is commonly done with a timer or auto switching relay. However, if both pumps are operated for equal amounts of time, then one can reasonable expect that if one fails from normal wear, the secondary pump may fail shortly after from equal wear. Therefore, it is a good idea to limit the secondary back-up pump to operate only 25% of the time, just enough to ensure that it is in good working order when needed.

If 2 or more pumps are needed for a multiple dispenser application, can the same bypass valve be used? Or should each have a separate bypass? If both pumps are supplying the same line to the dispensers, should the pumps be isolated with back-checks on the discharge side?

- Using separate bypass valves is necessary, **IF** each pump is supplying a separate and not interconnected discharge pipe to different dispensers.

- If 2 or more pumps are feeding the same discharge pipe to the dispensers, then using multiple bypass valves can be difficult to properly set. The bypass valves, when set to the same differential pressure, can have hysteresis, or can have their pressures fighting each other. This can result in pulsations and poor differential pressure control. So it is a good idea to have a 5 psi (.34 bar) difference between the setting of each valve. Additionally, it can be beneficial to use the next size larger bypass valves. If a single bypass valve is used, then it must be rated for a minimum of the total flow capacity of all pumps it is supporting. However, if only one pump is operating and the valve is too large, then it may not adequately control pressures. So it is often best to have several hoses on a single supply manifold, and each pump supporting a separate supply manifold.

- If 2 or more pumps are supplying the same discharge pipe to a dispenser island, it is a good practice to install a full port back check on the discharge side of each pump, after the pipe running to the bypass valve. This will keep one pump from back flowing the other and also prevent the pumps fighting each other.

Can a pump with a flow rate greater than the meter it is supplying be used? i.e., a 24 gpm (90 lpm) Autogas pump with a meter rated for 18 gpm (68 lpm) flow rate?

- **Possibly.** Often a meter runs better with a pump which is rated for slightly **MORE** than the meter rating, than it will with a pump rated for less. The helps ensure steady pressure and flow through the metering chamber. A meter's rated flow rate is usually GREATER than the application it is filling. Therefore, while a dispenser is rated for 18 gpm (68 lpm), when filling cylinders or Autogas applications, it will rarely, if ever, flow more than 12-15 gpm (45-58 lpm) maximum. The container/cylinder being filled, and the limits of the OPD valve and system design, are what ultimately governs flow rate, not the pump or the meter. When calibrating the meter, the flow should be limited by the inlet valve on the prover to within the NCWM rating of the meter. The bypass valve used with the pump **MUST** be sized to accommodate both full flow (when nozzle is closed) and any excess flow, not required by the dispensing application.

Troubleshooting

Pump Troubleshooting

Excessive Vane Wear

The life of pump vanes can vary widely, depending on operating conditions. Unusually rapid vane wear is an indicator of poor system design, improper bypass valve adjustment, sticking bypass valve, pump over-speeding or severe operational abuse.

A set of vanes should pump 1 to 2 million gallons (3.8 to 7.6 million liters) or more on average service. Of course, duty cycle will affect vane life. A system operating 24/7 will subject the pump vanes to more wear than a single shift or intermittent operation.

The most frequent causes of vane wear are pump over speeding, overpressure and running dry. Another cause may be using too large of a pump or running too fast for the piping system. Remove the pump's internal relief valve and examine it. If its surface is shiny and worn, liquid has been recirculating through it, thereby causing excessive vane wear.

If the system lacks a strainer or has one that is too coarse, dirt will abrade the vanes with coarse markings and leave scratches and grooves around the liner.

Occasionally, an operator neglects to turn off the pump power and leaves the pump in operation and/or running for extended periods of time. The pump will recirculate back to tank and cause the vanes to wear prematurely. The other reason for rapid vane wear is pumping excessive vapors, usually the result of a restricted inlet caused by:

1. Inadequate pipe size.
2. Too many elbows, tees and other fittings.
3. Too long of a suction line.
4. A dirty strainer basket, too small of a strainer or too fine of a basket mesh.
5. On lever operated internal valves, sometimes the wire from the control knob in the meter compartment slips on the lever so that pulling the knob does not fully open the valve.
6. On pressure-actuated internal outlet valves, dirt may cause them to stick in a partially closed position.

For other vane pump troubleshooting tips and possible solutions, please refer to the pump Installation, Operation and Maintenance Instructions.

For Blackmer LGL150 Series pumps – Instructions 501-K00.

For Ebsray RC Series pumps – Instructions 551-A00.

These instruction manuals can be found under the "Literature" tab at blackmer.com.

Petitioner EX1100
Champion v. Generac IPR2025-01457
Page 25 of 32

Appendix

Appendix	Description	Page
Appendix A	Properties of Liquefied Gasses	27
Appendix B	Vapor Pressure of Liquefied Gases	28
Appendix C	Saturated Propane Vapor in a 10,000 gallon tank	28
Appendix D	Friction Loss in LPG Hose	29
Appendix E	Friction Loss in Pipe	29
Appendix F	Resistance of Valves & Fittings in Equivalent Feet of Pipe	30
Appendix G	Other Reference Materials from Blackmer® and Ebsray®	30

Appendix A

Properties of Liquefied Gases*

	PROPANE	BUTANE
Formula	C_3H_8	C_4H_{10}
Boiling Point, °F	-44	32
Specific Gravity of Gas (Air = 1.00)	1.50	2.01
Specific Gravity of Liquid (Water = 1.00)	0.504	0.582
Lbs. per Gallon of Liquid at 60°F	4.20	4.81
BTU per Gallon at 60°F	91,502	102,032
BTU per Lb.	21,548	21,221
BTU per Cu. Ft. of Vapor at 60°F	2,488	3,280
Cu. Ft. of Vapor / Gallon of Liquid at 60°F	36.38	31.26
Cu. Ft. of Vapor / Lb. of Liquid at 60°F	8.66	6.51
Latent Heat of Vaporization at Boiling Point BTU/Gallon	773	808
Ignition Temperature in Air, °F	920 – 1,120	900 – 1,000
Maximum Flame Temperature in Air, °F	3,595	3,615
Limits of Inflammability, Percentage of Gas in Air Mixture		
At Lower Limit - %	2.15	1.55
At Upper Limit - %	9.60	8.60
Octane Number (ISO-Octane = 100)	Over 100	92

*Commercial quality, Figures show in this chart represent average values.

	PROPANE	BUTANE
Formula	C_3H_8	C_4H_{10}
Boiling Point, °C	-42	0
Specific Gravity of Gas (Air = 1.00)	1.50	2.01
Specific Gravity of Liquid (Water = 1.00)	0.504	0.582
Kgs. per Cubic Meter of Liquid at 15.56°C	504	582
Kilojoule per cubic meter of Vapor at 15.56°C	92,430	121,280
Kilojoule per kilogram of Vapor	49,920	49,140
Kilojoule per liter at 15.56°C	25,140	28,100
Cubic meter of Vapor / Liter of Liquid at 15.56°C	0.271	0.235
Cubic Meter of Vapor / kilogram of Liquid at 15.56°C	0.539	0.410
Latent Heat of Vaporization at Boiling Point, Kilojoule/liter	216	226
Ignition Temperature in Air, °C	493 – 549	482 – 538
Maximum Flame Temperature in Air, °C	1,980	2,008
Limits of Inflammability, Percentage of Gas in Air Mixture		
At Lower Limit - %	2.15	1.55
At Upper Limit - %	9.60	8.60
Octane Number (ISO-Octane = 100)	Over 100	92

*Commercial quality, Figures show in this chart represent average values.

Appendix B and C

Appendix B

Vapor Pressure of Liquefied Gases

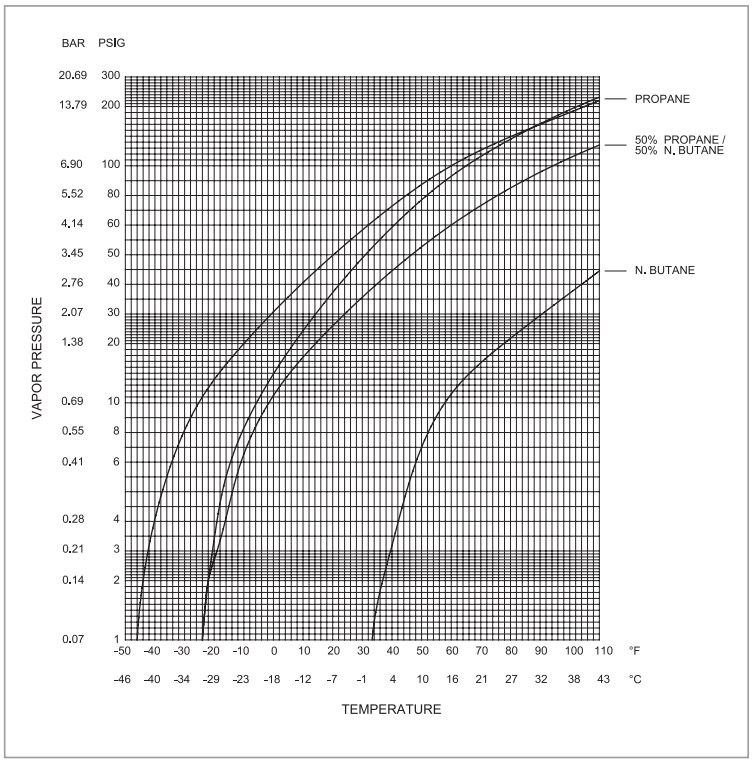

Appendix C

Saturated Propane Vapor in 10,000 gallon Tank

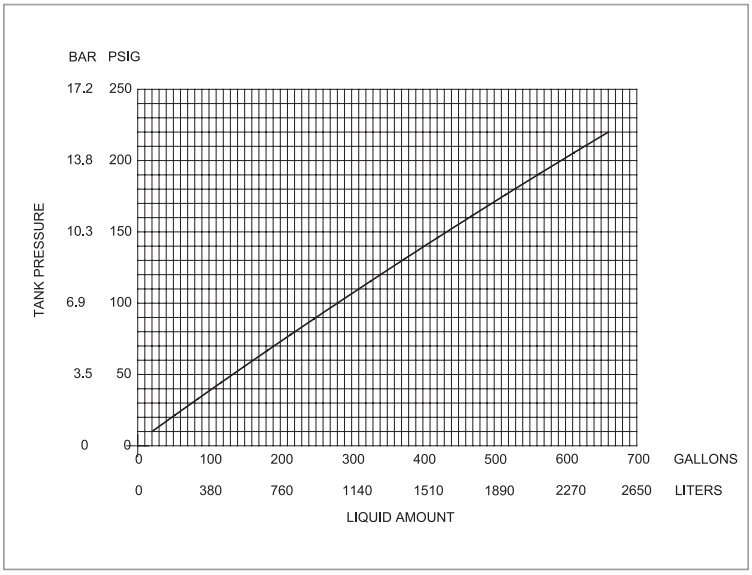

Appendix D and E

Appendix D

Friction Loss in LPG Hose
Hose Friction loss in psi for 100 ft. smooth bore rubber hose with inside diameters as shown, for propane. (These values will vary because of manufacturing tolerances on hose diameters.)

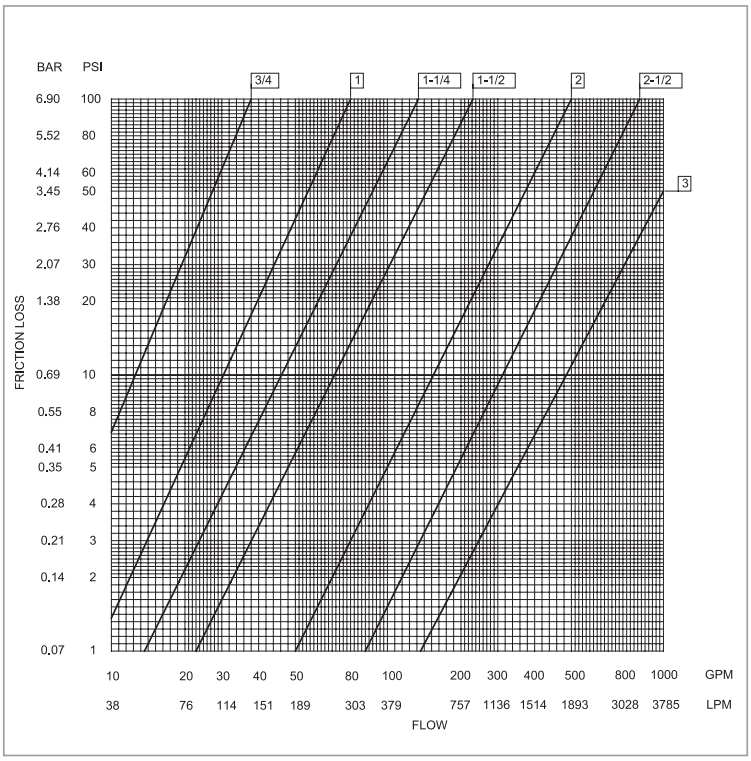

Appendix E

Friction Loss in Pipe
Pipe Friction loss in psi for 100 ft. new, Clean extra strong.
Schedule 80 pipe for propane.

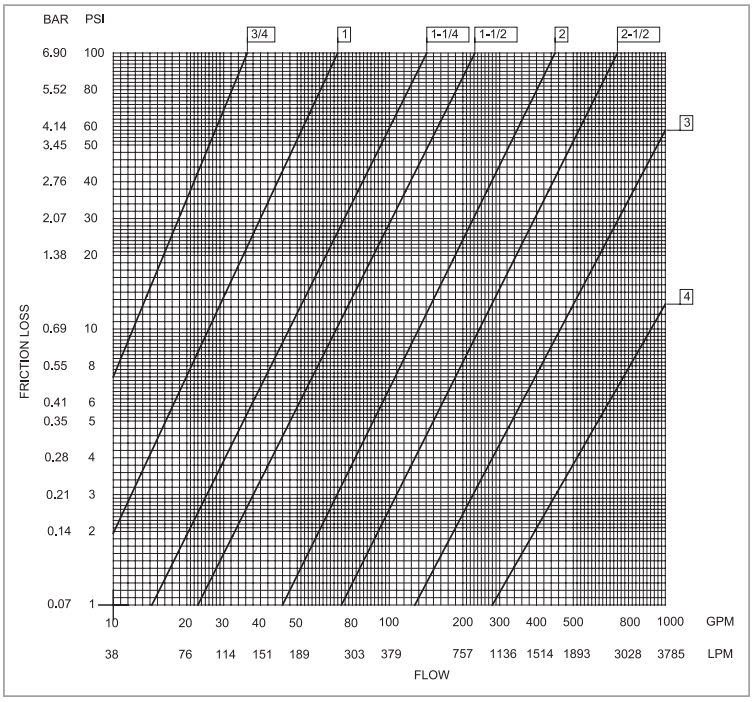

Appendix F and G

Appendix F

Resistance of Valves & Fittings in Equivalent Feet of Pipe

	PIPE SIZE						
	1	1.25	1.5	2	2.5	3	4
Elbow 90°	4	4.5	5	6	8	9	11
Elbow 45°	1	2	2	2.5	3	4	5
Tee thru side	6	8	9	12	14	17	22
Y strainer same size as pipe	25	25	25	42	42	42	60
Y strainer next size larger	16	16	16	16	14	20	
Globe valve	28	35	45	60	65	85	120
Angle valve	15	19	22	28	35	42	57
Ball valve	0.5	0.5	0.5	0.5	0.5	0.5	0.5
Quick-closing gate	3	3	3	3	3	3	3

Above values are approximate and will vary from one manufacturer to another

Appendix G

Other Reference Materials From Blackmer

500-001	Liquefied Gas Handbook
500-002	Application Guide – Pumping from Underground Tanks
CB254	LPG Equipment Training Manual

LGL Pump Maintenance, PowerPoint Presentation

Notes:

Where Innovation Flows

a DOVER company

PSG® reserves the right to modify the information and illustrations contained in this document without prior notice. This is a non-contractual document. 08-2015

Authorized PSG Partner:

PSG® Grand Rapids
1809 Century Avenue SW
Grand Rapids, MI 49503-1530 USA
T: +1 (616) 241-1611
F: +1 (616) 241-3752
blackmer.com

Copyright ©2015 PSG®, A Dover Company

500-004 08/15