US 20070137591A1

(19) United States

(12) Patent Application Publication

(10) Pub. No.: US 2007/0137591 A1

(43) Pub. Date: Jun. 21, 2007

Sugimoto et al.

(54) ENGINE OPERATED GENERATOR

(75) Inventors: **Yasuhiro Sugimoto**, Saitama (JP); **Hiroaki Kojima**, Saitama (JP); **Kazuhito Takemura**, Saitama (JP); **Katsuhiro Nakagawa**, Saitama (JP)

Correspondence Address:
CARRIER BLACKMAN AND ASSOCIATES
24101 NOVI ROAD
SUITE 100
NOVI, MI 48375

(73) Assignee: **Honda Motor Co., Ltd.**, Tokyo (JP)

(21) Appl. No.: **10/591,304**

(22) PCT Filed: **Sep. 20, 2005**

(86) PCT No.: **PCT/JP05/17294**

§ 371(c)(1),
(2), (4) Date: **Sep. 1, 2006**

(30) **Foreign Application Priority Data**

Sep. 29, 2004 (JP) 2004-285036

Publication Classification

(51) **Int. Cl.**
F01P 1/02 (2006.01)
F02B 43/00 (2006.01)

(52) **U.S. Cl.** **123/41.7**; 123/527

(57) **ABSTRACT**

An engine operated generator is provided with an engine, a generator driven by the engine, and a power control unit for controlling the power generated by the generator. A fuel gas stored in fuel bottles set in a case for the engine operated generator, is supplied to the engine though a fuel pressure regulator. The fuel bottles and the fuel pressure regulator are disposed adjacent to the power control unit to enable heat exchange with the power control unit provided with an inverter. Thus, heat is mutually utilized between the power control unit and at least one of the fuel bottles as fuel receptacles and the fuel pressure regulator.

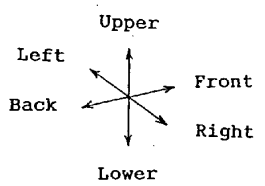

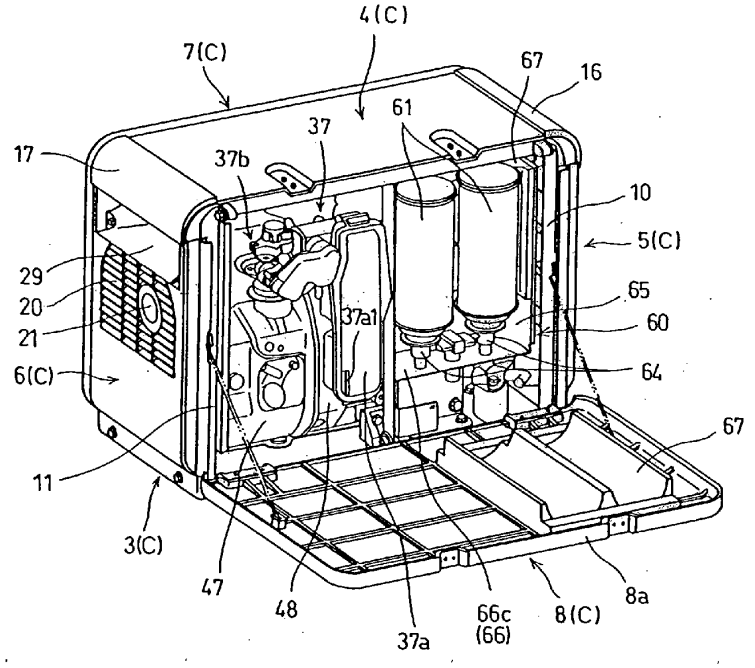

FIG. 1

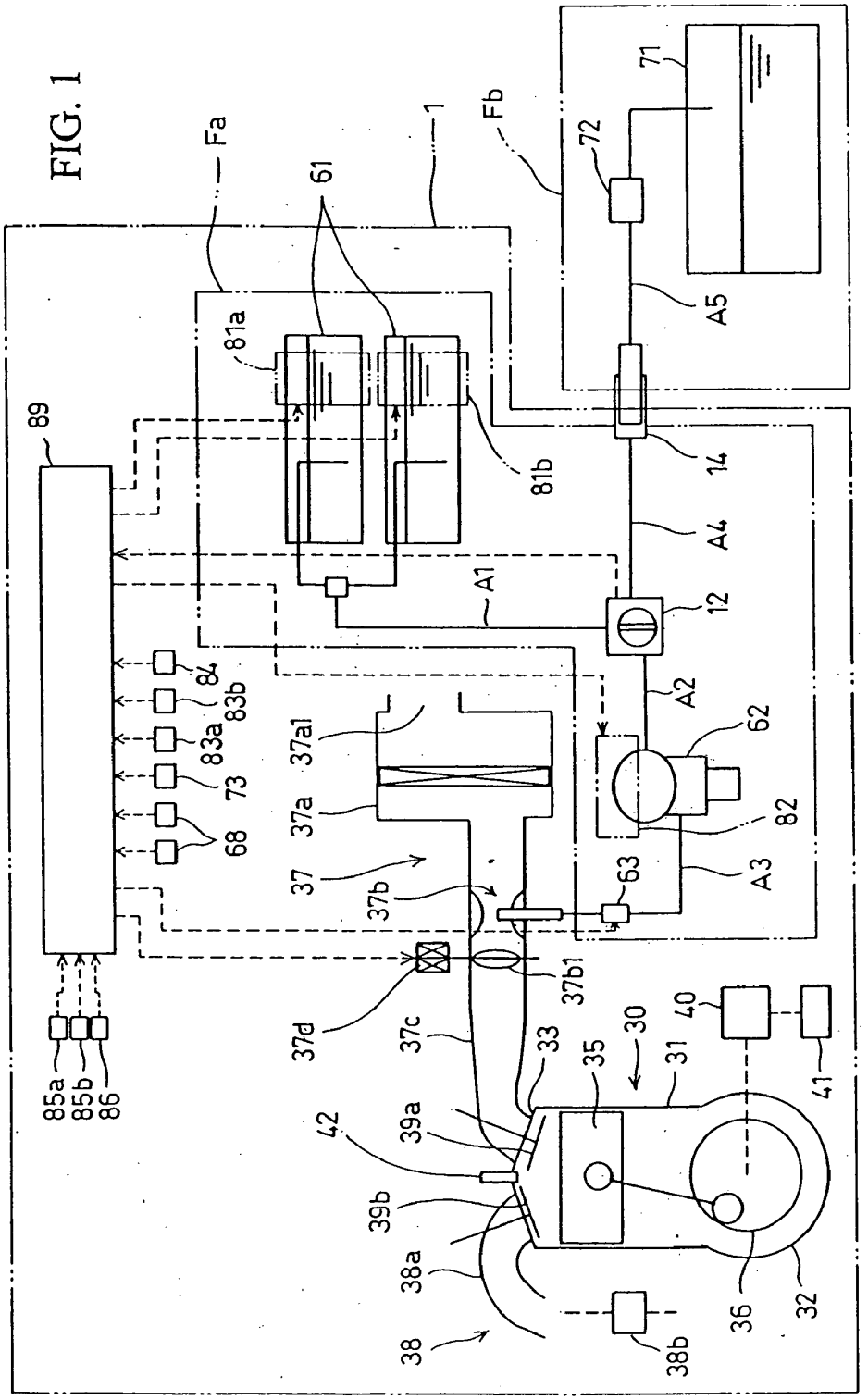
Fa
Fb
1
61
71
72
A5
81a
81b
14
A4
89
A1
12
A2
84
83b
83a
73
68
37a1
37a
62
82
37
37b
63
A3
37b1
37d
37c
33
35
30
31
40
41
85a
85b
86
42
39a
39b
38a
38
38b
36
32

FIG. 2

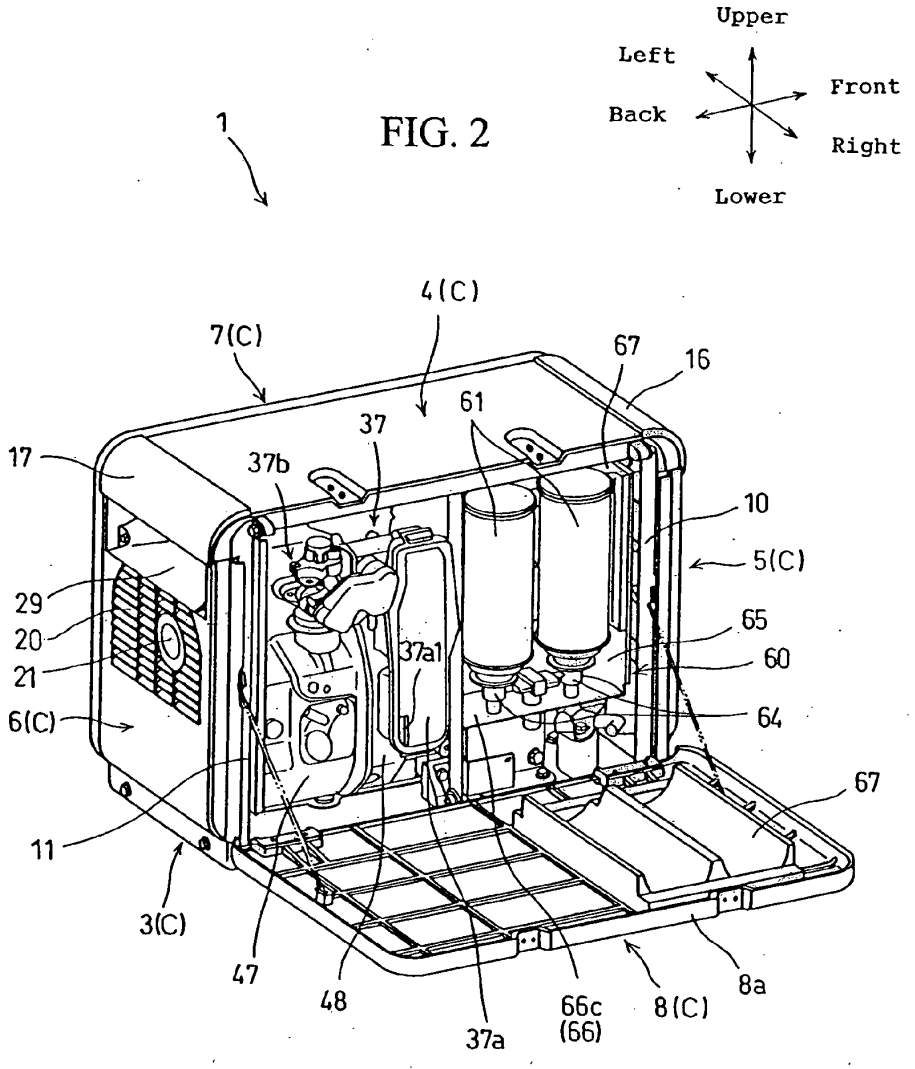
Upper
Left
Front
Back
Right
Lower
1
4(C)
7(C)
67
16
61
37
17
37b
10
5(C)
29
20
21
37a1
65
60
6(C)
64
67
11
3(C)
47
48
37a
66c
(66)
8(C)
8a

FIG. 3

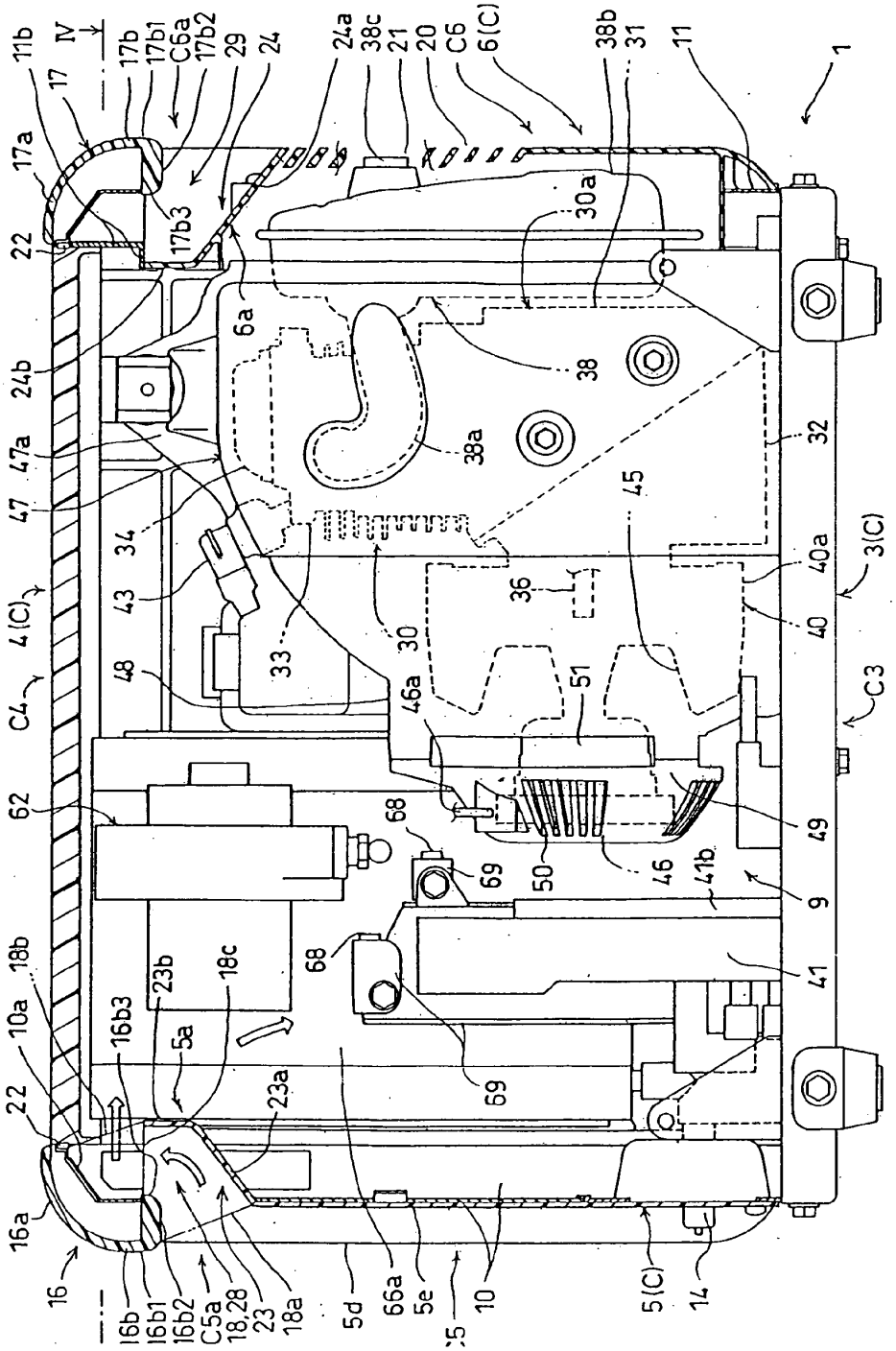
1
11
11b
17
17a
17b
17b1
17b2
17b3
C6a
29
24
24a
38c
21
20
C6
6(C)
38b
31
30a
22
24b
6a
38
38a
32
47a
47
34
43
4(C)
C4
48
33
30
36
45
40a
40
3(C)
C3
46a
51
62
68
69
50
46
41b
49
9
41
18b
10a
16b3
23b
18c
5a
23a
16a
16
16b
16b1
16b2
C5a
18,28
23
18a
5d
66a
5e
10
5(C)
14

FIG. 4

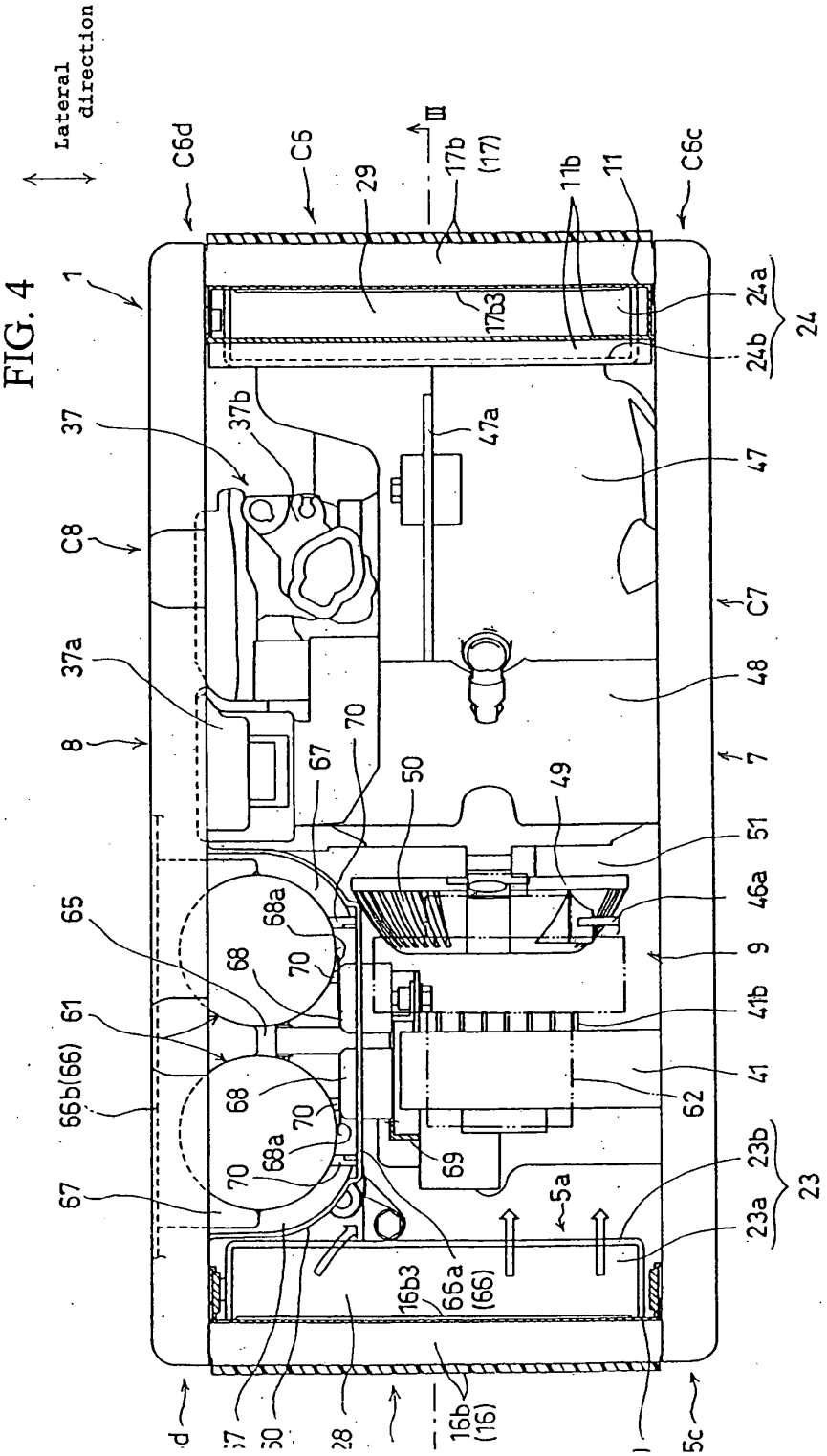
Lateral direction
C6d
C6
29
III
17b (17)
11b
11
C6c
1
17b3
24a
24b
24
37
37b
47a
47
C8
C7
37a
48
8
70
67
50
49
7
51
65
68a
46a
68
70
9
61
41b
66b(66)
68
41
62
70
68a
69
23b
67
70
5a
23a
23
16b3
66a (66)
d
37
30
28
16b (16)
1
5c

FIG. 5

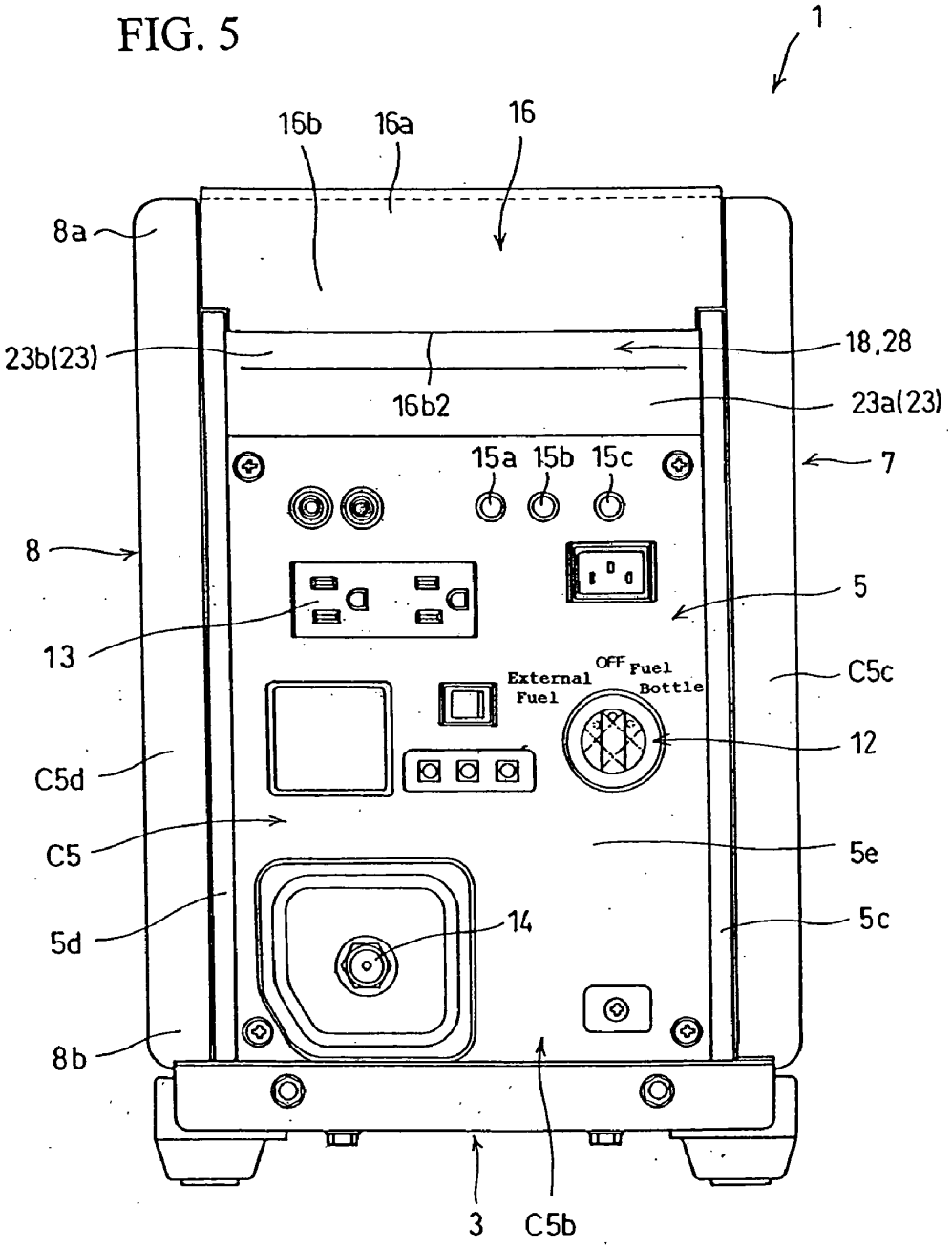
1
16b
16a
16
8a
23b(23)
18,28
16b2
23a(23)
15a
15b
15c
7
8
5
13
C5c
External Fuel
OFF
Fuel Bottle
12
C5d
C5
5e
5d
14
5c
8b
3
C5b

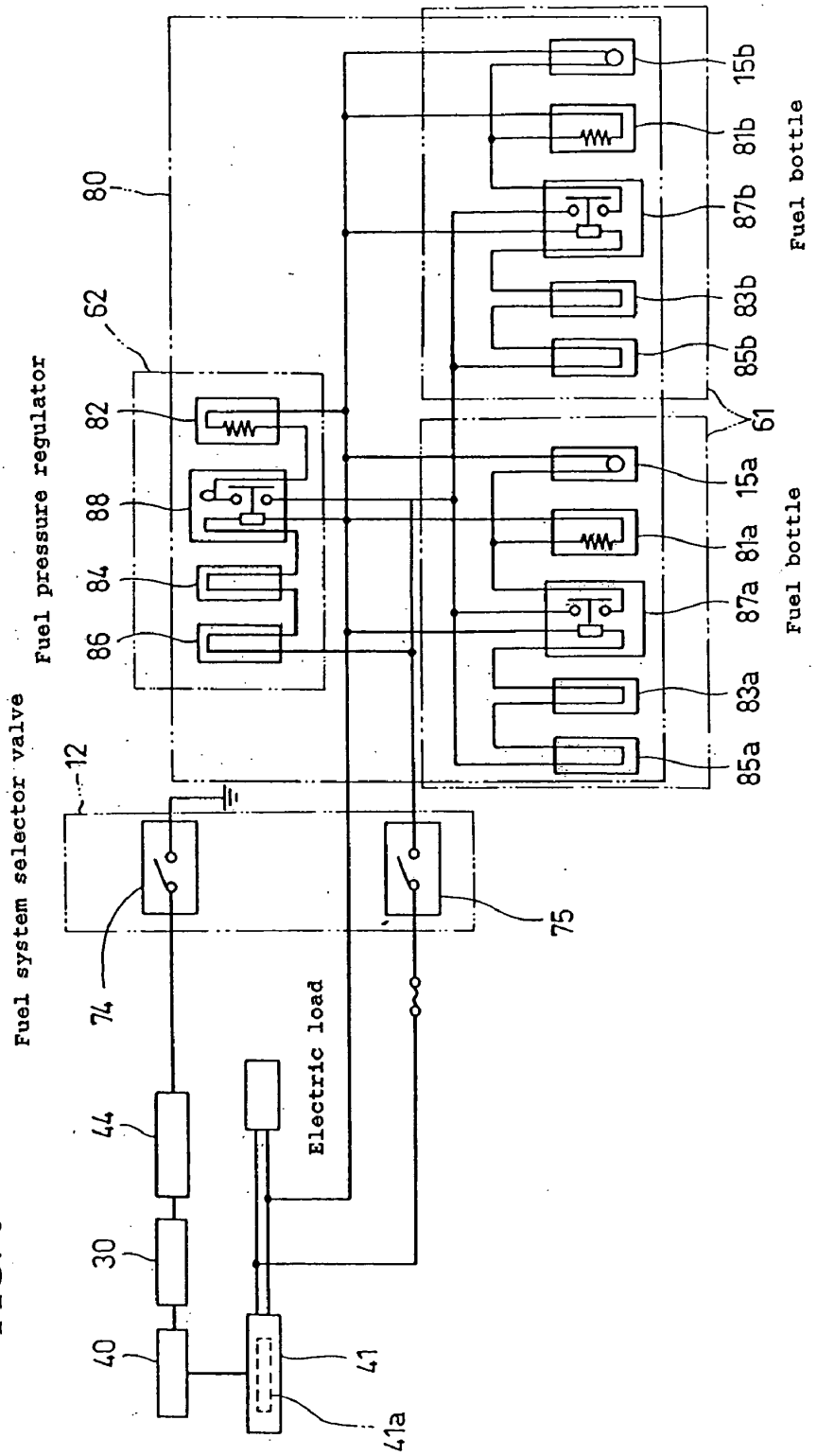
Fuel system selector valve
Fuel pressure regulator
Fuel bottle
Fuel bottle
Electric load
80
62
82
88
84
86
12
74
75
44
30
40
41
41a
61
15b
81b
87b
83b
85b
15a
81a
87a
83a
85a

FIG. 6

FIG. 7

	Fuel system selector valve		
	First position	Cutoff position	Second position
Fuel supply	Fuel bottle (Butane gas)	Cutoff	External fuel system (Propane gas)
Ignition system	Operative (Kill switch is open)	Inoperative (Kill switch is closed)	Operative (Kill switch is open)
Heating device	Operative (Heater switch is closed)	Inoperative (Heater switch is open)	Inoperative (Heater switch is open)

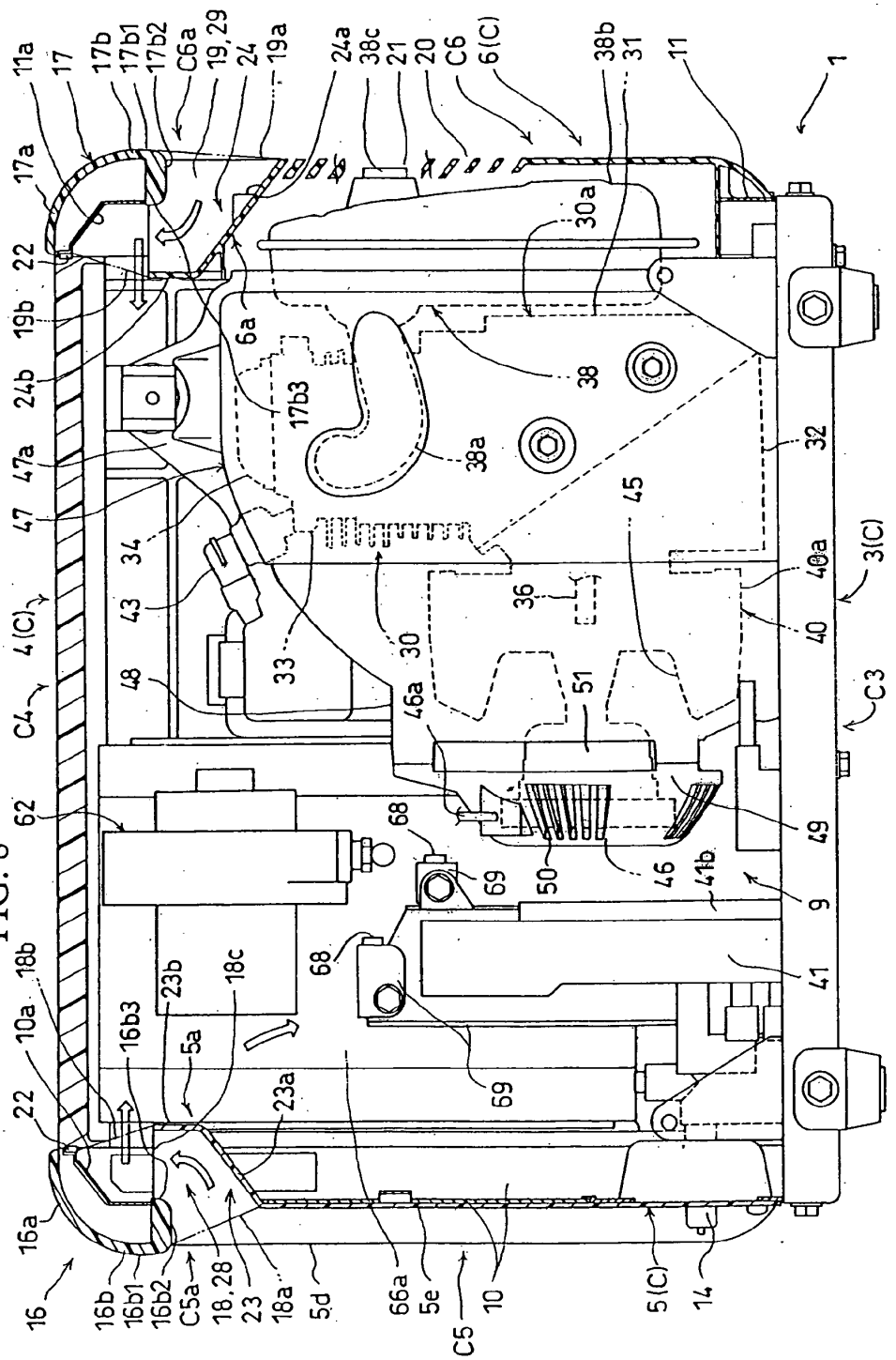
1
11
11a
17
17a
17b
17b1
17b2
C6a
19,29
24
19a
24a
38c
21
20
C6
6(C)
38b
31
30a
22
19b
24b
47a
47
4(C)
C4
62
6a
17b3
38
38a
32
45
34
43
48
33
30
36
46a
51
40a
40
3(C)
C3
49
68
69
50
46
41b
9
41
18b
10a
16b3
23b
18c
5a
23a
16a
16
16b
16b1
16b2
C5a
18,28
23
18a
5d
66a
5e
C5
10
5(C)
14

FIG. 8

FIG. 9

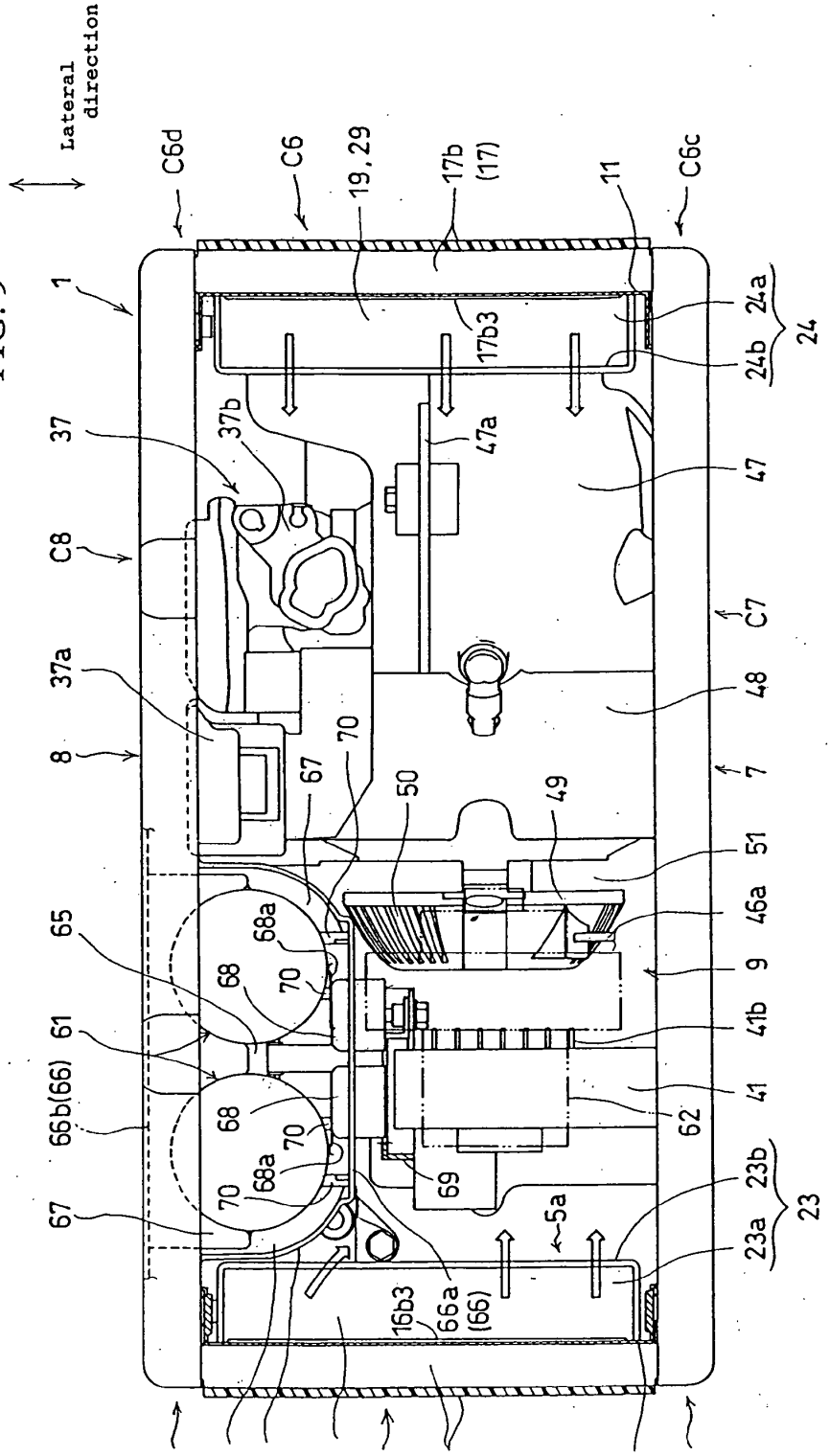
Lateral direction
C6d
C6
19, 29
17b (17)
11
C6c
1
24a
24b
24
17b3
37
37b
47a
47
C8
C7
37a
48
8
7
70
67
50
49
51
65
68a
46a
68
70
9
61
41b
66b(66)
68
41
62
70
68a
69
23b
23
67
70
5a
23a
16b3
66a (66)

FIG.10

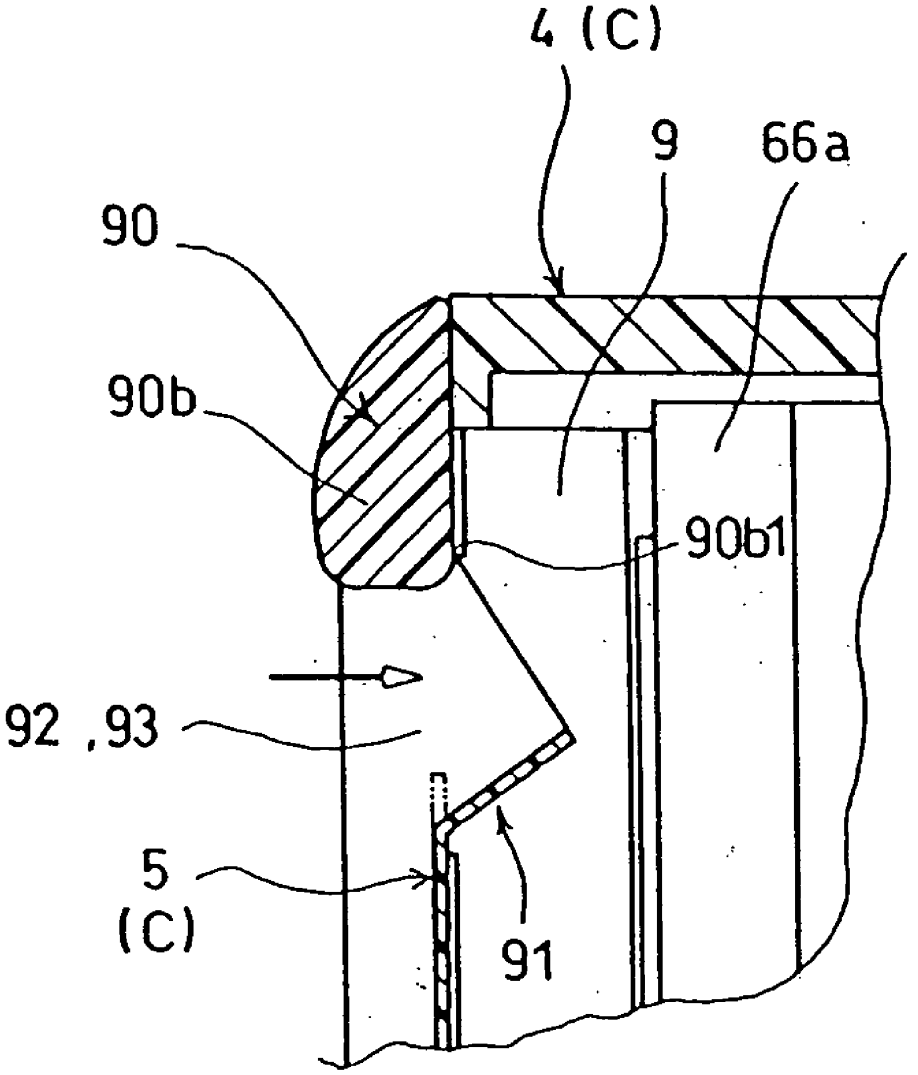

ENGINE OPERATED GENERATOR

TECHNICAL FIELD

[0001] The present invention relates to an engine operated generator having an engine to which is supplied a fuel gas stored in fuel receptacles in liquefied state, and an electric generator driven by the engine.

BACKGROUND ART

[0002] Engine operated generators are widely used as an electric source such as a temporary outdoor electric source and an emergency power supply. In case such engine operated generators are leisure or emergency equipment, a gas engine is often provided which uses fuel gas stored a small fuel receptacle, such as cassette fuel bottle.

[0003] The fuel gas is stored in the fuel receptacle in liquefied state and supplied to the gas engine in gasified state. When the operation of the gas engine is started and the fuel gas is supplied to the gas engine, the fuel gas stored in the fuel receptacle in liquefied state begins to be gasified under influence of reduction in the gas pressure to maintain the equilibrium between the liquid phase and the gas phase in the receptacle. For this reason, a large amount of latent heat of evaporation is needed, which reduces the temperature of the fuel receptacle. A fuel pressure regulator provided for regulating the pressure of the fuel gas is also caused to be reduced in temperature due to inflow of reduced-temperature fuel gas immediately after the gasification thereof and due to pressure reduction of the fuel gas itself.

[0004] If the temperature of the fuel receptacle is reduced excessively, gasification of the fuel gas becomes insufficient, so that the fuel gas pressure is reduced with a result that the fuel gas will not be supplied smoothly to the gas engine. As a measure to prevent this, it is known to heat the fuel receptacle by a heater in response to the temperature of the fuel gas receptacle and the gas pressure within the receptacle (For example, refer to Patent Documents 1 and 2).

[0005] On the other hand, a power control unit provided in the engine operated generator to control electric power generated by the electric generator, produces a large amount of heat due to its operation. A number of measures to cool the power control unit were known. Patent Document 3 discloses an engine operated generator having a sound proof case which encloses an engine, a generator and a control circuit unit (corresponding to the power control unit), wherein a box encasing the control circuit unit is provided with heat dissipating fins which are exposed to a cooling air inlet and are in contact with an end wall of the cooling air inlet.

[0006] Patent Document 1: JP 10-131810 A

[0007] Patent Document 2: JP 2671015 B

[0008] Patent Document 3: JP U 63-171632 A

DISCLOSURE OF THE INVENTION cl

Underlying Problem to be Solved by the Invention

[0009] The above-mentioned measure to heat the fuel receptacle by the heater has a problem in the manner of how the heater is provided and the manner to heat the receptacle, including how control of the heater is carried out without complication. Further, the cooling of the power control unit by cooling air involves a problem in that there are restriction to the arrangement of the power control unit and its associated parts and complication in the structure.

[0010] The present invention has been made in view of the foregoing circumstances and of the fact that the fuel receptacle storing the fuel gas in liquefied state undergoes temperature reduction while the power control unit undergoes temperature rise. The principal purpose of the present invention is to mutually utilize heat between the power control unit and at least one of the fuel receptacle and the fuel pressure regulator. Other objects of the present invention are to make it possible to effectively carry out the cooling of the power control unit by the fuel receptacle and the heating of the fuel receptacle by the power control unit, and to increase the freedom of arrangement of the fuel receptacle and the power control unit. Further objects of the present invention are to further increase the effect of cooling the power control unit by one of the fuel receptacle and the fuel pressure regulator and the effect of heating at least one of the fuel receptacle and the fuel pressure regulator by the power control unit, to increase the effect of cooling the power control unit, the generator and the engine, to cool an inverter of the power control unit that has a large switching loss and a large amount of generated heat, and to heat at least one of the fuel receptacle and the fuel pressure regulator utilizing the heat from the inverter.

MEANS TO SOLVE THE UNDERLYING PROBLEM

[0011] To attain the above objects, the present invention provides an engine operated generator comprising a fuel receptacle storing a fuel gas in liquefied state, an engine that receives the fuel gas from the fuel receptacle, a fuel pressure regulator for regulating pressure of the fuel gas supplied from the fuel receptacle to the engine, a generator driven by the engine, and a power control unit for controlling power generated by the generator, wherein at least one of the fuel receptacle and the fuel pressure regulator is arranged adjacent to the power control unit, for heat exchange with the power control unit.

[0012] According to the invention, at least one of the fuel receptacle and the fuel pressure regulator, which are reduced in temperature due to gasification of the fuel during the operation of the engine operated generator, is arranged adjacent to the power control unit in heat exchange relation with the power control unit. As a result, heat dissipation from the power control unit can be increased, in other words, cooling of the power control unit is promoted by at least one of the fuel receptacle and the fuel pressure regulator, whereby temperature rise of the power control unit is suppressed. On the other hand, at least one of the fuel receptacle and the fuel pressure regulator is heated by the power control unit, whereby temperature drop of the fuel receptacle and the fuel pressure regulator is suppressed.

[0013] The engine operated generator according to the present invention may be provided with a fuel storage chamber for storing the fuel receptacle, the fuel storage chamber having a side wall and heat transfer means made of a heat conducting material, the fuel receptacle and the side wall being thermally connected via the heat transfer means, the side wall being disposed adjacent to the power control unit to enable heat exchange with the power control unit.

[0014] According to this feature, heat transfer from the power control unit to the fuel receptacle and heat dissipation from the power control unit are carried out through the side wall to which heat from the fuel receptacle is transmitted. Therefore, restriction to the arrangement of the fuel receptacle and the power control unit is almost eliminated for realizing heat exchange between the fuel receptacle and the power control unit. The quantity of heat transferred between the fuel receptacle and the power control unit can be increased by increasing the area of the side wall and by disposing the side wall as close as possible to the power control unit. It will thus be apparent that mutual utilization of heat between the fuel receptacle and the power control unit can be realized.

[0015] Preferably, the heat transfer means comprises a plurality of columnar members provided between the fuel receptacle and the side wall of the fuel storage chamber to be in contact with the fuel receptacle and the side wall.

[0016] According to the present invention, at least one of the fuel receptacle and the fuel pressure regulator may be in direct thermal connection with the power control unit via heat transfer means made of a material of high heat conductivity.

[0017] According to this feature, mutual utilization of heat between the power control unit and at least one of the fuel receptacle and the fuel pressure regulator is increased since heat transfer is made via the heat transfer means.

[0018] The power control unit typically has an inverter.

[0019] The inverter has a large switching loss and generates a large amount of heat, so that it is heated. The heated inverter is thus cooled effectively by at least one of the fuel receptacle and the fuel pressure regulator, and is prevented from temperature rise, while at least one of the fuel receptacle and the fuel pressure regulator is heated effectively by the heated inverter, whereby temperature drop of them is suppressed.

[0020] Preferably, the engine operated generator comprises a case forming an internal space for accommodating the fuel receptacle, the engine and the generator; and a cooling air passage for conducting cooling air from the internal space through the fuel receptacle, the power control unit in this order, to the generator and the engine to cool the same.

[0021] According to this feature, cooling air introduced into the internal space of the case is cooled by the fuel receptacle to be reduced in temperature. The cooled cooling air then first cools the power control unit and then cools the generator and the engine. The power control unit is more cooled by the mutual utilization of heat between itself and at least one of the fuel receptacle and the fuel pressure regulator, than a case without the mutual utilization of heat. As a consequence, the temperature of the cooling air after cooling the power control unit is made lower than in the case without the mutual utilization of heat.

[0022] Preferably, the fuel pressure regulator and the power control unit are disposed on a side opposite the fuel storage chamber with respect to the side wall, and the power control unit is disposed below the fuel pressure regulator.

[0023] Further, the case may have a side wall having an upper edge along which a cooling air inlet passage is provided, and the fuel pressure regulator may be provided immediately downstream of the cooling air inlet passage.

EFFECT OF THE INVENTION

[0024] The present invention provides the following advantages. Since heat is utilized mutually between the power control unit and at least one of the fuel receptacle and the fuel pressure regulator, temperature rise of the power control unit is suppressed and therefore heat dissipating structure for the power control unit can be in small size. Furthermore, since temperature rise of at least one of the fuel receptacle and the fuel pressure regulator is suppressed, it is not required to provide a heating device for heating the fuel receptacle or the fuel pressure regulator. Even if a heating device is provided, the heating capacity of the heating device can be made small, which means that free choice of the heating device is assured. Thus, in case the heating device is an electric heater, the power consumption of the electric heater can be reduced.

[0025] According to the preferred embodiment of the invention, the following advantages are obtained in addition to the above-stated advantages. Since heat is mutually utilized through the side wall between the fuel receptacle and the power control unit, the degree of freedom of arrangement of the fuel receptacle and the power control unit is increased, and the degree of mutual utilization of heat between the fuel receptacle and the power control unit is made high, whereby the cooling of the power control unit by the fuel receptacle and the heating of the fuel receptacle by the power control unit can be realized with an increased effectiveness.

[0026] A further advantage below is obtainable by the embodiment of the invention. Since the degree of mutual utilization of heat between the power control unit and at least one of the fuel receptacle and the fuel pressure regulator is increased, one of the cooling effect on the power control unit by at least one of the fuel receptacle and the fuel pressure regulator and the heating effect on at least one of the fuel receptacle and the fuel pressure regulator by the power control unit is further improved.

[0027] A further advantage below is obtainable by the embodiment of the invention. The power control unit can be cooled effectively by the cooling air which has been cooled, so that the generator and the engine can also be cooled with increased effectiveness.

[0028] A further advantage below is obtainable by the embodiment of the invention. The inverter generating a large amount of heat is cooled effectively, while at least one of the fuel receptacle and the fuel pressure regulator is heated effectively.

BRIEF DESCRIPTION OF THE DRAWINGS

[0029] FIG. **1** is a diagrammatic view of an engine generator in a first embodiment of the present invention;

[0030] FIG. **2** is a perspective view of the engine generator shown in FIG. **1**;

[0031] FIG. **3** is a sectional side elevation of the engine generator shown in FIG. **2** taken from the left side of the engine generator with its left side cover removed, in which

a front cover, a back cover and a top cover are shown in a sectional view taken on the line III-II in FIG. **4**;

[**0032**] FIG. **4** is a plan view of the engine generator shown in FIG. **2**, in which the top cover is removed;

[**0033**] FIG. **5** is a front elevation of the engine generator shown in FIG. **2**;

[**0034**] FIG. **6** is a circuit diagram of electrical circuits for controlling a fuel valve and a heating device included in the engine generator shown in FIG. **2**;

[**0035**] FIG. **7** is a table of assistance in explaining the relation of the operating position of the fuel valve with a fuel supply system and an ignition system in the engine generator shown in FIG. **2**;

[**0036**] FIG. **8** is a sectional side elevation, similar to FIG. **3**, of an engine generator in a second embodiment of the present invention;

[**0037**] FIG. **9** is a plan view, similar to FIG. **4**, of the engine generator shown in FIG. **8**; and

[**0038**] FIG. **10** is a sectional view of a part of an engine generator in a third embodiment of the present invention.

DESCRIPTION OF THE REFERENCE NUMERALS

[**0039**] **1** . . . Engine generator, **3** . . . Bottom cover, **4** . . . Top cover, **5** . . . Front cover, **6** . . . Back cover, **7** . . . Left side cover, **8** . . . Right side cover, **9** . . . Internal space, **12** . . . Fuel system selector valve, **16**, **17**, **90** . . . Carrying handle, **18**, **19**, **92** . . . Inlet passage, **20** . . . Outlet, **23**, **24**, **91** . . . Depressed part, **28**, **29**, **93** . . . Hand spaces, **30** . . . Engine, **40** . . . Generator, **41** . . . Power control unit, **42** . . . Ignition plug, **44** . . . Ignition coil, **45** . . . Cooling fan, **46** . . . Recoil starter, **47** . . . Shroud, **48** . . . Fan cover, **49** . . . Starter cover, **50**,**51** . . . Inlet, **60** . . . Fuel storage structure, **61** . . . Fuel bottle, **62** . . . Fuel pressure regulator, **63** . . . Fuel cutoff valve, **65** . . . Fuel storage chamber, **66** . . . Side wall, **68** . . . Fuel bottle detector, **70** . . . Heat transfer member, **71** . . . External fuel bottle, **73** . . . Pressure sensor, **74** . . . Kill switch, **75** . . . Main switch, **80** . . . Heating device, **89** . . . ECU, C . . . Case, Fa . . . Fuel supply system.

DESCRIPTION OF THE PREFERRED EMBODIMENTS

[**0040**] Preferred embodiments of the present invention will be described with reference to FIGS. **1** to **10**.

[**0041**] FIGS. **1** to **7** show a first embodiment of the present invention. Referring to FIG. **1**, a portable engine generator **1** to which the present invention is applied can be connected to an external fuel system Fb.

[**0042**] Referring to FIGS. **2** and **3**, the engine generator **1** includes a box-shaped case C in the form of a rectangular body, a pair of carrying handles **16** and **17** combined with the case C, a combustion engine **30**, such as a gas engine, a fuel supply system Fa for supplying a fuel gas to the engine **30**, an electric generator **40**, namely, a working machine, to be driven for operation by the engine **30**, a power control unit **41** for controlling power generated by the generator **40**, and an electronic control unit (ECU) **89** for controlling the engine **30** and the fuel supply system Fa. The engine **30**, the fuel supply system Fa, the generator **40**, the power control unit **41** and the ECU **89** are housed in the case C having an internal space **9**. The case C is a soundproof structure capable of suppressing the leakage of noise generated by the engine **30** during operation to the outside the case C.

[**0043**] An expression "grip the carrying handles **16** and **17**" used in this specification signifies both gripping the carrying handles **16** and **17** and putting hands on the carrying handles **16** and **17**.

[**0044**] Referring to FIGS. **2** to **5**, the case C has a bottom cover **3**, a top cover **4**, a front cover **5**, a back cover **6**, a left side cover **7** and a right side cover **8**. The bottom cover **3** and the top cover are vertically opposed to each other. The front cover **5** and the back cover **6** are longitudinal opposed to each other with respect to a first direction. The left side cover **7** and the right side cover **8** are laterally opposed to each other with respect to a second direction. The covers **3** to **8** are made of a synthetic resin.

[**0045**] In this embodiment, the first direction is a longitudinal direction and the second direction is a lateral direction. Opposite sides with respect to the first direction are front and back sides. Opposite sides with respect to the second direction are right and left sides.

[**0046**] The bottom, the top, the front, the back, the left and the right surfaces of the case C are the respective outer surfaces of a bottom part C**3** namely, the bottom cover **3**, a top part C**4**, namely, the top cover **4**, a front part C**5**, namely, the front cover **5**, a back part C**6**, namely, the back cover **6**, a left part C**7**, namely, the left side cover **7**, and a right part C**8**, namely, the right side cover **8**, respectively.

[**0047**] The front cover **5** and the back cover **6** are fastened to reinforcing panels **10** and **11** made of a metal and disposed on the inner sides of the front cover **5** and the back cover **6**, respectively. The reinforcing panels **10** and **11** are connected to the bottom cover **3**. The left side cover **7** is connected to the reinforcing panels **10** and **11**. The right side cover **8** can be opened. A lower end part **8***b* of the right cover **8** is pivotally connected to the bottom cover **3** so that the right cover **8** can be turned. An upper end part **8***a* of the right cover **8** can be fastened to the top cover **4** by fastening means, not shown. As shown in FIG. **3**, the reinforcing panels **10** and **11** are provided with openings, and respective inward depressed parts **23** and **24** extend into the interior of the case C through the openings of the reinforcing panels **10** and **11**, respectively. Terms "inward" and "outward" are used to specify directions into and out of the case C, respectively.

[**0048**] Referring to FIGS. **3** and **5**, arranged on an operating panel **5***e* formed on the front cover **5** are an output receptacle **13**, a pipe connector **14** to which a fuel pipe connected to an external fuel bottle **71** shown in FIG. **1** is connected, and pilot lamps **15***a*, **15***b* and **15***c*.

[**0049**] Referring to FIGS. **2** to **5**, an upper end part **5***a* of the front cover **5** and the first carrying handle **16** define a cooling air passage **18**. Fresh air, namely, cooling air, flows through the cooling air passage **18** into the internal space **9** of the case C while the engine **30** is in operation. The back cover **6** opposed to the front cover **5** with respect to the engine **30** and the power control unit **41** is provided with a cooling air outlet **20** and an exhaust opening **21**. The cooling air used for cooling the engine **30** and the power control unit **41** is discharged to the outside of the case C through the

cooling air outlet **20**. Exhaust gas discharged from the engine **30** is discharged to the outside through the exhaust opening **21**.

[**0050**] The first carrying handle **16** and the second carrying handle **17** to be gripped by the user to lift up and carry the engine generator **1** are combined with the respective upper end parts of the front part C**5** and the back part C**6** of the case C, respectively. The first carrying handle **16** is disposed in front of the top cover **4** at substantially the same level as the top cover **4**. The second carrying handle **17** is disposed behind the top cover **4** at substantially the same level as the top cover. The first carrying handle **16** serves also as a first corner member on top of the front cover **5**. The second carrying handle **17** serves also as a second corner member on top of the back cover **6**. The first and second corner members respectively forming the upper front corner and the upper back corner of the case C are the first carrying handle **16** and the second carrying handle **17**, respectively.

[**0051**] The first carrying handle **16** and the second carrying handle **17**, which are made of a synthetic resin, are joined to the top cover **4**. Sealing members **22** (FIG. **3**) are held between the first carrying handle **16** and the top cover **4** and between the second carrying handle **17** and the top cover **4**, respectively. The first carrying handle **16** and the second carrying handle **17** have top parts **16***a* and **17***a* and vertical parts **16***b* and **17***b*, respectively. The top parts **16***a* and **17***a* are the front and back end members of the top part C**4** of the case C. The vertical parts **16***b* and **17***b* face the front cover **5** and the back cover **6**, respectively. Hands are extended along lower parts **16***b***1** and **17***b***1**, lower end parts **16***b***2** and **17***b***2** and inner parts **16***b***3** and **17***b***3** of the vertical parts **16***b* and **17***b*, respectively, to lift up the engine generator **1**. The lower end parts **16***b***2** and **17***b***2** correspond to upper end parts **5***a* and **6***a* of the front cover **5** and the back cover **6**, respectively, with respect to vertical and lateral directions. In this embodiment, the lower end part **16***b***2** and **17***b***2** correspond to inward depressed parts **23** and **24**, respectively, with respect to vertical and lateral directions.

[**0052**] The opposite side ends of the first carrying handle **16** extending to the opposite side ends C**5***c* and C**5***d* of the front part C**5** of the case C are joined to the front cover **5** by welding or the like. The opposite side ends of the second carrying handle **17** extending to the opposite side ends C**6***c* and C**6***d* of the back part C**6** of the case C are joined to the back cover **6** by welding or the like. The opposite side ends C**5***c* and C**5***d* of the front part C**5** of the case C and the opposite side ends C**6***c* and C**6***d* of the back part C**6** of the case C are parts of the left side cover **7** and the right side cover **8** or parts corresponding to the left part C**7** and the right part C**8** of the case C with respect to lateral directions, respectively. As shown in FIG. **4**, the respective widths, namely, dimensions with respect to the lateral direction, of the first carrying handle **16** and the second carrying handle **17** are approximately equal to the respective widths of the front cover **5** and the back cover **6**, respectively, and is approximately equal to the lateral distance between the left side cover **7** and the right side cover **8**.

[**0053**] The first carrying handle **16** and the inward depressed part **23** formed by bending the upper end part **5***a* of the front cover **5** define the cooling air passage **18**. The inward depressed part **23** is on the side of the enclosed space **9** with respect to the first carrying handle **16**. The inward depressed part **23** has an inclined part **23***a* inclined obliquely upward toward the enclosed space **9**, and a vertical inner part **23***b* substantially vertically rising from the inner end of the inclined part **23***a*. The width of the depressed part **23** is substantially equal to and slightly shorter than that of the first carrying handle **16**.

[**0054**] The lower end part **16***b***2** and the inclined part **23***a* define an inlet **18***a* of the cooling air passage **18**. The top part **16***a* of the first carrying handle **16** and the upper end of the inner part **23***b* define an outlet **18***b* of the cooling air passage **18**. The inlet **18***a* and the outlet **18***b* are indicated by two-dot chain lines in FIG. **3**. The inlet **18***a* opens under the first carrying handle **16**. The cooling air passage **18** extends in a range substantially corresponding to a range between the opposite ends C**5***c* and C**5***d* of the front part C**5** of the case C. The width of the cooling air passage **18** is substantially equal to the width of the front cover **5** and the lateral distance between the left side cover **7** and the right side cover **8**. The cooling air that has flowed longitudinally through the inlet **18***a* into the case C flows upward along the inside surface **16***b***3** of the vertical part **16***b* and the vertical inner part **23***b*. The top part **16***a* deflects the flow of the cooling air so that the cooling air flows longitudinally into the enclosed space **9**. The cooling air flows through the outlet **18***b* into the enclosed space **9** in the case C. The first carrying handle **16** and the inward depressed part **23** define the labyrinthine cooling air passage **18**.

[**0055**] The first carrying handle **16** projects slightly from a right side part **5***c* and a left side part **5***d* protruding forward from the operating panel **5***e* of the front cover **5**. A lower end part C**5***b* of the front part C**5** of the case C is on the side of the enclosed space **9** with respect to the side parts **5***c* and **5***d*.

[**0056**] In this embodiment, a part of the reinforcing panel **10** lying in the cooling air passage **18** serves as a guide part **10***a* for making the cooling air flow smoothly into the enclosed space **9** in the case C.

[**0057**] The cooling air passage **18** serves also as a first hand space **28** into which hand is inserted to grip the first carrying handle **16** when the user carries the engine generator **1**. The cooling air passage **18** extends below the first carrying handle **16**. An inner part **18***c* of the cooling air passage **18** defined mainly by the vertical inner part **23***a* merges into the enclosed space **9** in the case C. Thus a part of the hand space **28** extends below the top part C**4** of the case C in the enclosed space **9** in the case C.

[**0058**] The second carrying handle **17** and the inward depressed part **24** formed by bending the upper end part **6***a* of the back cover **6** define a second hand space **29**. Hands are inserted into the first hand space **28** and the second hand space **29** to grip the first carrying handle **16** and the second carrying handle **17** when the user carries the engine generator **1**. The inward depressed part **24** is on the side of the internal space **9** with respect to the second carrying handle **17**. The inward depressed part **24** has an inclined part **24***a* inclined obliquely upward toward the interior **9**, and a vertical inner part **24***b* substantially vertically rising from the inner end of the inclined part **24***a*. The opposite side ends of the inward depressed part **24** correspond substantially to the opposite side ends of the second carrying handle **17**, respectively. The width of the depressed part **24** is substantially equal to and slightly shorter than that of the first carrying handle **16**.

[0059] A part of the reinforcing panel **11** extending to the top cover **4** serves as a closing part **11***b*. The closing part **11***b* closes substantially completely the inner end of the second hand space **29**. Thus, fresh air is practically unable to flow through the second hand space **29** into the enclosed space **9** in the case C.

[0060] The first carrying handle **16** and the second carrying handle **17** are disposed on the case C symmetrically with respect to a plane of symmetry perpendicular to the longitudinal direction. The inward depressed parts **23** and **24**, and the first hand space **28** and the second hand space **29** are substantially symmetrical, respectively, with respect to the plane of symmetry.

[0061] Referring to FIGS. **1** and **3**, the engine **30** is a single-cylinder four-stroke cycle OHC air-cooled engine. The engine **30** has an engine body **30***a*. The engine body **30***a* includes a cylinder **31**, a crankcase **32** joined to the lower end of the cylinder **31**, a cylinder head **33** formed integrally with the cylinder **31** and a head cover **34** joined to the upper end of the cylinder head **33**. A piston **35** is fitted in the cylinder **31** so as to reciprocate in the cylinder **31**. The cylinder head **32** and the piston define a combustion chamber. The engine body **30***a* is fastened to the bottom cover **3**. A crankshaft **36** disposed with its axis longitudinally extended is supported for rotation by the cylinder **31** and the crankcase **32**. The piston **35** drives the crankshaft **36** for rotation.

[0062] Referring to FIGS. **2** and **4**, an air intake system **37** connected to the engine **30** includes a carburetor **37***b* and an intake pipe **37***c* connected to the cylinder head **33** to carry intake air into the combustion chamber. Part of the cooling air flowed through the cooling air passage **18** into the enclosed space **9** flows through an inlet **37***a***1** into an air cleaner **37***a*. The carburetor **37***b*, namely, an air-fuel mixture producing device, mixes air from the air cleaner **37***a* and the fuel gas supplied by the fuel supply system Fa or the external fuel system Fb to make an air-fuel mixture. A throttle valve **37***b***1** included in the carburetor **37***b* is driven by a stepping motor **37***d*. The stepping motor **37***d* is controlled by the ECU **89** including a microcomputer to control the output of the engine **30** so that the crankshaft **36** rotates at a predetermined rotational speed.

[0063] An exhaust system **38** connected to the engine **30** includes an exhaust pipe **38***a* connected to the cylinder head **33** to carry an exhaust gas discharged from the combustion chamber, and a muffler **38***b* connected to the exhaust pipe **38***a*.

[0064] An intake valve **39***a* is operated by a valve mechanism mounted on the cylinder head **33**. The air-fuel mixture that has flowed through the intake valve **39***a* into the combustion chamber is ignited by an ignition plug **47** held by a holder **43** as shown in FIG. **3**. Combustion pressure produced by the combustion of the air-fuel mixture in the combustion chamber drives the piston **35** to rotate the crankshaft **36**. The combustion gas produced by the combustion of the air-fuel mixture is discharged from the combustion chamber through an exhaust valve **39***b* operated by the valve mechanism. The exhaust gas flows through the exhaust pipe **38***a*, the muffler **38***b* and a tail pipe **38***c*. The exhaust gas is discharged into the atmosphere from the tail pipe **38***c* opening into an exhaust opening **21** formed in the back cover **6**. The muffler **38***b* deadens the exhaust noise.

[0065] Referring to FIGS. **1** and **3**, the generator **40** rotatively driven by the engine **30** has a rotor **40***a*, and a stator provided with coils, disposed diametrically inside the rotor **40***a* and fastened to the crankcase **32**. The rotor **40***a* is provided with magnets and is fixedly mounted on the crankshaft **36**, namely, the output shaft of the engine **30**. A capacitor is charged with the power generated by the generator **40**. An ignition system including the ignition plug **42** is provided with an ignition coil **44** (FIG. **6**) provided with a primary winding connected to the capacitor. The ignition coil **44** raises an input voltage up to a high voltage and applies a high-voltage pulse to the ignition plug **42** in response to an ignition signal provided at a specific crankshaft position.

[0066] A cooling fan **45** rotatively driven by the crankshaft **36** is combined with the rotor **40***a* and rotates together with the rotor **40***a* to take cooling air, namely, fresh air, through the cooling air passage **18** into the case C while the engine **30** is in operation. The engine **30** is started by operating a recoil starter **46**. The recoil starter **46** is connected to the cooling fan **45** and is provided with a rope **46***a*. A knob connected to the rope **46***a* is pulled to rotate the crankshaft **36**.

[0067] Referring to FIGS. **2** to **4**, the engine body **30***a* and the exhaust pipe **38***a* are covered with a shroud **47** for improved noise suppressing effect and for the improvement of the cooling effect of the cooling air. The shroud **47** defines a cooling air guide passage around the engine body **30***a* and the exhaust pipe **38***a*. The shroud **47** is made of a synthetic resin and is fixed to the engine body **30***a*. A bracket **47***a* formed integrally with the shroud **47** is fastened to the top cover **4**. A fan cover **48** made of a synthetic resin and connected to the front end of the shroud **47** covers the cooling fan **45**. A starter cover **49** connected to the front end of the fan cover **48** covers the recoil starter **48**. The cooling fan **45** takes air into a space covered with the shroud **47** from the enclosed space **9** through an inlet **50** formed in the starter cover **49** and an inlet **51** defined by the starter cover **49** and the fan cover **48** to send

[0068] A power control unit **41** for controlling the power generated by the generator **40** is disposed on the front side of the cooling fan **45** and the recoil starter **46**. The power control unit **41** includes an inverter **41***a* (FIG. **6**) for controlling voltage and frequency, and a heat-radiating fins **41***b*, namely, heatsink, for dissipating heat generated by electric devices including the inverter **41***a*.

[0069] The power control unit **41**, the recoil starter **46**, the cooling fan **45**, the generator **40**, the engine body **30***a* and the muffler **38***b* are arranged in that order in a straight arrangement on the axis of the crankshaft **36** in the flowing direction of the cooling air from the cooling air passage **18** toward the cooling air outlet **20** in the internal space **9** in the case C.

[0070] Referring to FIG. **1**, a fuel system F for supplying the fuel gas to the engine **30** has the fuel supply system Fa, namely, an internal fuel system, and the external fuel system Fb disposed outside the case C. The fuel supply system Fa is included in the engine generator **1** and is disposed on the case C or in the enclosed space **9** of the case C.

[0071] Referring to FIGS. **1** to **4**, the fuel supply system Fa is provided with one or a plurality of fuel bottles **61**, namely,

first fuel sources, internal fuel sources or first fuel containers. The fuel bottle **61** or the fuel bottles **61** are contained in a fuel storage structure **60**. In this embodiment, the fuel supply system Fa is provided with the two fuel bottles **61**. The fuel supply system Fa includes a fuel pressure regulator **62**, a heating device **80**, a fuel system selector valve **12**, namely, a fuel selecting means, fuel pipes, a connector **14**, and a fuel cutoff valve **63**. The fuel pressure regulator **62** reduces the pressure of the fuel gas supplied from the two fuel bottles **61** and the external fuel bottle **71** and regulates the pressure of the fuel gas so that the fuel gas may be supplied to the carburetor **18***b* at fuel supply rate varying in proportion to load on the engine **30**. The heating device **80** heats the fuel bottles **61** and the fuel pressure regulator **62**. The fuel system selector valve **12** is placed on the operating panel **5***e* and is operated to select a fuel supply line. The fuel pipes interconnect the fuel bottles **61**, the fuel pressure regulator **62** and the carburetor **18***b*. The fuel cutoff valve **63** stops the flow of the fuel gas from the fuel system F to the engine **30**.

[**0072**] The fuel bottles **61** contain the fuel gas having comparatively high boiling point, such as liquefied butane gas. The fuel bottles **61** are detachably held in the fuel storage structure **60** with the fuel supply devices thereof connected to connectors **64** (FIG. **2**) attached to the fuel storage structure **60**.

[**0073**] The external fuel system Fb includes the external fuel bottle **71**, namely, a second fuel source or an external fuel source, a pipe A**5** and a pressure reducing device **72**. The external fuel bottle **71** is disposed outside the engine generator **1**. The pipe A**5** connects the external fuel bottle **71** to the connector **14**. The external fuel bottle **71** has a storage capacity greater than that of the fuel bottles **61**; that is, the quantity of the fuel gas contained in the external fuel bottle **71** is greater than that of the fuel gas contained in the fuel bottles **61**. The external fuel bottle **71** contains a second fuel gas having a boiling point lower than that of the first fuel gas. The second fuel gas is, for example, liquefied propane gas. The external fuel bottle **71** is, for example, a propane gas cylinder for home use.

[**0074**] The fuel storage structure **60** has a case **66** defining a fuel storage chamber **65** for holding the fuel bottles **61**. The case **66** has a first side wall **66***a* made of a metal having a high thermal conductivity, such as aluminum, a second side wall **66***b*, which is a part of the right cover **8**, and a bottom wall **66***d*. The upper end of the storage chamber **66** opens into the internal space **9**. The fuel bottles **61** and the fuel storage structure **60** overlap the power control unit **41**, the fuel pressure regulator **62** and the inlets **50** and **51** with respect to the longitudinal direction. The fuel bottles **61** and the fuel storage structure **60** are disposed near the right cover **8**. The first side wall **66***a* separates the fuel bottles **61** from the power control unit **41** and the fuel pressure regulator **62**. The first side wall **66***a* is disposed such that an upper part thereof lies below the outlet **18***b* of the cooling air passage **18** with respect to the flowing direction of the cooling air and lies under the exit **18***b*. The upper end of the first side wall **66***a* lies substantially at the upper end of the internal space **9**. The fuel bottles **61**, the first side wall **66***a*, the fuel pressure regulator **62** and the power control unit **41** coincide with the outlet **18***b* with respect to the lateral direction.

[**0075**] A vibration proof holder **67** made of an elastic material is attached to the first side wall **66***a* and the second side wall **66***b* in contact with the fuel bottles **61**. The holder **67** serves as a vibration isolator for preventing the fuel bottles **61** from being vibrated by vibrations generated by the operating engine **30**.

[**0076**] The fuel storage structure **60** is provided with fuel bottle detectors **68** to detect the fuel bottles **61** held in the fuel storage structure **60**. The fuel bottle detectors **68** are attached to a support member **69** disposed outside the fuel storage chamber **65**. The fuel bottle detectors **68** penetrate the first side wall **66***a* and protrude into the fuel storage chamber **65**. Each of the fuel bottle detectors **68** is, for example, a microswitch provided with an actuator **68***a*. The actuators **68** are pushed by the fuel bottles **61** when the fuel bottles **61** are placed correctly in the fuel storage chamber **65** and thereby the fuel bottles **61** correctly placed in the fuel storage chamber **65** are detected.

[**0077**] The fuel bottles **61** are disposed near the power control unit **41** so that the fuel bottles **61** and the power control unit **41** are able to exchange heat. More specifically, the fuel bottles **61** are thermally connected to the first side wall **66***a* by heat transfer members **70** made of a metal having a high heat conductivity, such as aluminum. The heat transfer members **70** are columnar members each having one end in contact with the fuel bottle **61** and the other end in contact with the first side wall **66***a*. The first side wall **66***a* is disposed close to the power control unit **41** so that the cooling air flowing through the internal space **9** is able to transfer heat efficiently from the power control unit **41** to the first side wall **66***a*. Thus heat generated by the power control unit **41** is transferred to the fuel bottles **61** through the first side wall **66***a* to which the fuel bottles **61** are thermally connected by the heat transfer members **70**.

[**0078**] The fuel bottle **61** supplies the first fuel gas in liquid phase to the fuel pressure regulator **62**. The external fuel bottle **71** supplies the second fuel gas in gas phase to the fuel gas pressure regulator **62**. The fuel gas pressure regulator **62** is disposed directly above the inlets **50** and **51** so as to overlap the fuel bottles **61**, the first side wall **66***a* of the fuel storage structure **60**, the power control unit **41** and the inlets **50** and **51** with respect to the longitudinal direction. The fuel pressure regulator **62** is disposed near the power control unit **41** to enable the cooling air flowing through the internal space **9** to transfer heat from the power control unit **41** to the fuel pressure regulator **62**. In FIG. **4**, the fuel pressure regulator **62** is indicated by two-dot chain lines. The fuel pressure regulator **62** functions as a vaporizer for vaporizing the first fuel gas supplied thereto in liquid phase.

[**0079**] Referring to FIG. **1**, in the fuel supply system Fa, a first fuel system for supplying the first fuel gas from the fuel bottles **61** to the engine **30** is constituted by the fuel bottles **61**, a pipe A**1** connecting the fuel bottles **61** to the fuel system selector valve **12**, a pipe A**2** connecting the fuel system selector valve **12** to the fuel pressure regulator **62**, the fuel pressure regulator **62**, a pipe connecting the fuel pressure regulator **62** to the carburetor **18***b*, and the fuel cut-off valve **63** placed in the pipe A**3**. A second fuel system for supplying the second fuel gas from the external fuel bottle **71** to the engine **30** is constituted by a pipe A**4** connecting the connector **14** to the fuel cutoff valve **12**, the pipe A**2** connecting the fuel system selector valve **12** to the fuel pressure regulator **62**, the fuel pressure regulator, the pipe A**3** connecting the fuel pressure regulator **62** to the carburetor **18***b*, and the fuel cutoff valve **63**.

[0080] The pipes A1 to A4 extended in the case C form fuel lines. The fuel pressure regulator **62**, the pipe A3 and the fuel cutoff valve **63** form a common fuel system for the first and the second fuel system.

[0081] The fuel cutoff valve **63**, namely, a fuel cutoff means, is, for example, a normally-open solenoid valve which closes when energized. The ECU **89** controls the fuel cutoff valve **63** on the basis of the pressure of the first fuel gas. More specifically, the fuel pressure regulator **62** is provided with a pressure sensor **73** for measuring the pressure of the first fuel gas flowing from the fuel bottle **61** to the fuel pressure regulator **62**. When the pressure of the first fuel gas measured by the pressure sensor **73** is higher than an upper limit pressure P**1**, the ECU **89** closes the fuel cutoff valve **63** to disconnect the common fuel system from the fuel bottle **61**. The upper limit pressure P**1** is determined beforehand to ensure the safe operation of the engine generator **1** by avoiding the operation of the engine **30** while the pressure of the first fuel gas in the fuel bottles **61** is excessively high due to the excessive heating of the fuel bottles **61**.

[0082] The fuel system selector valve **12** connects either the first fuel system that supplies the first fuel gas to the engine **30** or the second fuel system that supplies the second gas to the engine **30** selectively to the fuel pressure regulator **62**. The fuel system selector valve **12** can be set in a first position, where the knob of the fuel system selector valve **12** is at a first position marked with "Internal fuel" and indicated by chain lines in FIG. **5**, to connect the first fuel system to the engine **30** to supply the first fuel gas to the engine **30**, in a second position, where the knob of the fuel system selector valve **12** is at a second position marked with "External fuel" and indicated by two-dot chain lines in FIG. **5**, to connect the second fuel system to the engine **30** to supply the second fuel gas to the engine **30**, and in a cutoff position, where the knob of the fuel system selector valve **12** is at a cutoff position, where the knob of the fuel system selector valve **12** is at a neutral position marked with "Off" and indicated by continuous lines in FIG. **5**, to stop supplying fuel gas to the engine **30** by disconnecting both the first and the second fuel system from the engine **30**. The fuel system selector valve **12** is changed from the first to the second position and from the second to the first position via the neutral position.

[0083] Referring to FIG. **6**, the fuel system selector valve **12** functions, in addition to functioning as means for supplying the first or the second fuel gas selectively to the engine **30**, as switches for starting and stopping the engine **30** and controlling the ignition system and the heating device **80**. A kill switch **74** for controlling the operation of the ignition system is opened and closed and a main switch **75** for controlling the operation of the heating device **80** is opened and closed according to the operating position of the fuel system selector valve **12**.

[0084] The heating device **80** includes electric heaters **81***a* and **81***b*, namely, heating means, placed in combination with the fuel bottles **61** in the fuel storage structure **60**, an electric heater **82**, namely, a heating means, combined with the fuel pressure regulator **62**, temperature sensors **83***a*, **83***b* and **84** for measuring the respective temperatures of the fuel bottles **61** and the fuel pressure regulator **62**, temperature sensors **85***a*, **85***b* and **86** for measuring the respective temperatures of the electric heaters **81***a*, **81***b* and **82**, relays **87***a*, **87***b* and **88** for opening and closing heater circuits for supplying power to the electric heaters **81***a*, **881***b* and **82** in response to control signals given thereto by the ECU **89**, and pilot lamps **15***a* and **15***b* (FIG. **5**) for indicating impartment of energy to the electric heaters **81***a* and **81***b*.

[0085] The electric heaters **81***a*, **81***b* and **82** heat the two fuel bottles **61** and the fuel pressure regulator **62**, respectively, to promote the vaporization of the first fuel gas in a liquid phase. Heating the two fuel bottles **61** and the fuel pressure regulator **62** by the heaters **81***a*, **81***b* and **82** prevents the excessive drop of the respective temperatures of the fuel bottles **61** and the fuel pressure regulator **62** due to the vaporization of the first fuel gas and the resultant excessive drop of the pressure of the first fuel gas. Thus, the first fuel gas can be stably supplied to the engine **30**.

[0086] Referring to FIG. **7** as well, when the fuel system selector valve **12** is set in the first (the second position), the first fuel gas (the second fuel gas) can be supplied to the engine **30** and the kill switch **84** is opened. Consequently, the ignition system is operative and hence the engine **30** is able to operate. When the fuel system selector valve **12** is set in the cutoff position, supply of the first fuel gas or the second fuel gas to the engine **30** is stopped and, consequently, the engine **30** stops. Thus, the fuel system selector valve **12** serves as an engine switch that is opened when the fuel system selector valve **12** is set in the cutoff position.

[0087] The main switch **75** is closed only when the fuel system selector valve **12** is set in the first position to make the heating device **80** operative. Consequently, the electric heaters **81***a*, **81***b* and **82** heat the fuel bottles **61** and the fuel pressure regulator **62**, respectively. The heating operations of the electric heaters **81***a*, **81***b* and **82** are controlled on the basis of the respective temperatures of the fuel bottles **61** and the fuel pressure regulator **62**, respectively. When the fuel system selector valve **12** is set in the second position or the cutoff position, the first fuel gas is not supplied to the engine **30**, the main switch **75** opens, the heating device **80** becomes inoperative and the fuel bottles **61** and the fuel pressure regulator **62** are not heated.

[0088] The Operation and Effect of the Engine Generator **1** will be Described.

[0089] The fuel system selector valve **12** is changed from the cutoff position to the first position to supply the first fuel gas to the engine **30** and the recoil starter **46** is operated to start the engine **30**. The engine **30** continues running. The power control unit **41** controls the power generated by the generator **40** driven by the engine **30**. The power thus generated is supplied to an electric device connected to the output receptacle **13**. The cooling fan **45** driven by the engine **30** sucks air in the enclosed space **9** through the inlets **50** and **51**. Then, fresh air, namely, cooling air, is caused to flow through the cooling air passage **18** into the internal space **9** by the suction of the cooling fan **45**.

[0090] The cooling air flows through the cooling air passage **18** and the top part of the internal space **9** into the internal space **9**. Part of the cooling air flows downward to cool the heat-radiating fins **41***b* of the power control unit **41** after transferring heat to the first side wall **66***a* and the fuel pressure regulator **62**, transfers heat to the fuel pressure regulator **62** and is sucked through the inlets **50** and **51** into

the space inside the shroud **47** by the cooling fan **45**. The cooling air flowing inside the shroud **47** cools the engine body **30***a*, the exhaust pipe **38***a* and the muffler **38**. Then, the cooling air flows to the outside through the cooling air outlet **20**.

[**0091**] When the first fuel gas is consumed by the engine **30** and only a very small quantity of the first fuel gas is left in the fuel bottles **61**, the first fuel gas needs to be cutoff and the second fuel gas needs to be supplied. Then, the fuel system selector valve **12** is set in the cutoff position to stop the engine **30**. At the same time, the kill switch **74** is closed and the engine **30** can be immediately stopped. Subsequently, the fuel system selector valve **12** is set in the second position to supply the second fuel gas to the engine **30** and the recoil starter **46** is operated to start the engine **30**.

[**0092**] The inward depressed part **23** is formed in the front cover **5** of the engine generator **1** on the side of the internal space **9** with respect to the first carrying handle **16**, the first carrying handle **16** and the inward depressed part **23** define the cooling air passage **18**, the first hand space **28** is formed in the cooling air passage **18**, the inward depressed part **24** is formed in the back cover **6** of the engine generator **1** on the side of the internal space **9** with respect to the second carrying handle **17**, and the second carrying handle **17** and the inward depressed part **24** define the second hand space **29**.

[**0093**] The cooling air passage **18** serves also as the first hand space **28** and is formed in the front cover **5** of the case C defining the internal space **9**, the inward depressed parts **23** and **24** are components defining the first hand space **28** and the second hand space **29** an protrude into the internal space **9** of the case C, and the hand spaces **28** and **29** do not extend outside the case C of the engine generator **1**. Therefore, protrusion of the first carrying handle **16** and the second carrying handle **17** respectively from the front cover **5** and the back cover **6** of the case C is prevented or limited to a small extent and the first carrying handle **16** and the second carrying handle **17** do not occupy a large space. Consequently, the engine generator **1** has a small size and needs a small space for storage. Since the first carrying handle **16** and the second carrying handle **17** are not prominent, the first carrying handle **16** and the second carrying handle **17** scarcely spoil the aesthetic appearance of the engine generator **1** and the engine generator **1** has a good appearance. Since the cooling air passage **18** contains the first hand space **28**, the cooling air passage **18** and the first hand space **28** do not need to be formed separately, which reduces restrictions on the design of the appearance of the case C. The first hand space **28** and the second hand space **29** defined by the front cover **5** and the back cover **6**, respectively, facilitate carrying the engine generator **1**.

[**0094**] The first carrying handle **16** is cooled by the cooling air flowing through the cooling air passage **18** while the engine **30** is in operation. Therefore, the first carrying handle **16** and the second carrying handle **17** are not excessively heated and can be gripped to carry the engine generator **1** while the engine generator **1** is in operation.

[**0095**] The first carrying handle **16** and the second carrying handle **17** have the vertical parts **16***b* and **17***b* having the lower parts **16***b***1** and **17***b***1**, lower end parts **16***b***2** and **17***b***2** and inner parts **16***b***3** and **17***b***3**, respectively. Therefore, the first carrying handle **16** and the second carrying handle **17** can be easily gripped by putting hands respectively to the vertical parts **16***b* and **17***b*, which facilitates carrying the engine generator **1**.

[**0096**] The labyrinthine cooling air passage **18** can be easily formed by the first carrying handle **16** having the vertical part **16***b*, and the inward depressed part **23** without requiring any complex structure. Since the internal space **9** communicates with the outside space by means of the labyrinthine cooling air passage **18**, outward propagation of noise generated by the operating engine generator **1** through the cooling air passage **18** can be effectively suppressed. Consequently, the leakage of the noise generated by the operating engine generator **1** from the case C through the cooling air passage **18** can be suppressed without increasing the cost of the engine generator **1**.

[**0097**] The first carrying handle **16** is disposed in the front part C**5** of the case C, the inlet **18***a* of the cooling air passage **18** is formed below the first carrying handle **16**, and the first carrying handle **16** and the cooling air passage **18** extend laterally over the entire width of the front part C**5** of the case C. Therefore, hands can be put on an optional part, suitable for carrying the engine generator **1**, of the first carrying handle **16** extending in a wide lateral range to grip the first carrying handle **16**, which facilitates carrying the engine generator **1**. The inlet of the cooling air passage **18** can be formed in a large area without spoiling the aesthetic appearance of the engine generator **1**, the cooling air flowing through the laterally wide cooling air passage into the case suppresses the stagnation of air in the case and, consequently, the engine **30**, the generator **40** and the power control unit **41** can be efficiently cooled.

[**0098**] Since the cooling air passage **18** is formed in an upper part of the front cover **5**, hot air heated by the engine **30**, the generator **40** and the power control unit **41** in the state of hot soak immediately after the stop of the engine **30** and rising upward by convection can easily flow to the outside through the cooling air passage **18**. Thus the natural ventilation of the internal space **9** in the case C is promoted and the cooling of the engine **30**, the generator **40** and the power control unit **41** immediately after the stop of the engine **30** is promoted.

[**0099**] The first carrying handle **16** projects slightly from the right side part **5***c* and the left side part **5***d* protruding forward from the operating panel **5***e* of the front cover **5**. The lower part C**5***b* of the front part C**5** of the case C is on the side of the internal space **9** with respect to the side parts **5***c* and **5***d*. Even if the engine generator **1** is installed with the front cover **5** in contact with an external structure, such as a wall, a space between the side parts **5***c* and **5***d* opens downward and the vertical part **16***b* of the first carrying handle **16** protrudes forward beyond the side parts **5***c* and **5***d*. Consequently, fresh air, namely, cooling air, can be sufficiently taken through the space between the side parts **5***c* and **5***d* of the case and the external structure into the cooling air passage **18**.

[**0100**] The fuel bottles **61** and the fuel pressure regulator **62** are disposed close to the power control unit **41** so that heat can be transferred from the power control unit **41** to the fuel bottles **61** and the fuel pressure regulator **62**. Therefore, the cooling air is able to transfer heat generated by the power control unit **41** to the fuel bottles **61** and the fuel pressure regulator **62**, which are cooled at low temperatures during

the operation of the engine generator **1** by the endothermic vaporization of the fuel gas. Therefore, heat generated by the power control unit **41** can be efficiently dissipated. In other words, the fuel bottles **61** and the fuel pressure regulator **62** promote cooling of the power control unit **41**. Consequently, the rise of the temperature of the power control unit **41** can be suppressed, the fuel bottles **61** and the fuel pressure regulator **62** can be heated by the heat generated by the power control unit **41** and, consequently, the drop of the temperatures of the fuel bottles **61** and the fuel pressure regulator **62** can be suppressed. Thus the rise of the temperature of the power control unit **41** can be suppressed and hence the heat-radiating fins **41***b* of the power control unit **41** may be small. Since the drop of the temperatures of the fuel bottles **61** and the fuel pressure regulator **62** can be suppressed, the thermal output of the heating device **80** can be reduced and the power consumption of the electric heaters **81***a*, **81***b* and **82**, namely, heat sources, can be reduced.

[**0101**] The fuel bottles **61** is thermally connected to the first side wall **66***a* defining the fuel storage chamber **65** by the heat transfer member **70**, and the power control unit **41** is disposed near the first side wall **66***a* so that heat can be easily transferred from the power control unit **41** to the first side wall **66***a*. Consequently, heating the fuel bottles **61** by heat from the power control unit **41** and dissipating heat generated by the power control unit **41** are achieved by heat transfer through the first side wall **66***a* to the fuel bottles **61**. Therefore, there are only a few restrictions on the arrangement of the fuel bottles **61** and the power control unit **41** to enable heat exchange between the fuel bottles **61** and the power control unit **41**. The rate of heat transfer from the power control unit **41** to the fuel bottles **61** can be increased by properly designing the shape and disposition of the first side wall **66***a*, such as increasing the size of the first side wall **66***a* and disposing the first side wall **66***a* closer to the power control unit **41**. Thus the utilization of heat by the fuel bottles **61** and the power control unit **41** can be increased. Consequently, the first side wall **66***a* enables the effective use of heat generated by the power control unit **41** by the fuel bottles **61** and the efficient dissipation of the heat generated by the power control unit **41**, the degree of freedom of arranging the fuel bottles **61** and the power control unit **41** increases, the utilization of heat by the fuel bottles **61** and the dissipation of heat generated by the power control unit **41** can be enhanced, the power control unit **41** can be efficiently cooled by the fuel bottles **61** and the fuel bottles can be efficiently heated by the power control unit **41**.

[**0102**] At least part of the cooling air that has flowed through the cooling air passage **18** into the internal space **9** flows past the first side wall **66***a* contiguous with the fuel bottles **61**, the fuel pressure regulator **62**, the power control unit **41**, the generator **40** and the engine **30** in that order. Consequently, the cooling air that has flowed into the internal space **9** is cooled by the fuel bottles **61** and the fuel pressure regulator **62** and the temperature of the cooling air drops to a lower temperature. Thus the generator **40** and the engine **30** can be effectively cooled by the cooling air thus cooled by the fuel bottles **61** and the fuel pressure regulator **62**. Consequently, the thus cooled cooling air exercises a high cooling effect on the generator **40** and the engine **30**.

[**0103**] The inverter **41***a* causing a large switching loss and generating a large amount of heat is heated at high temperatures. The fuel bottle **61** and the fuel pressure regulator **62** cool the hot inverter **41***a* effectively to suppress the rise of the temperature of the inverter **41***a*. On the other hand, the hot inverter **41** heats the fuel bottles **61** and the fuel pressure regulator **62** effectively to suppress the drop of the temperatures of the fuel bottles **61** and the fuel pressure regulator **62**. Consequently, the inverter **41***a* that generates heat at high rate is effectively cooled and the fuel bottles **61** and the fuel pressure regulator **62** are heated effectively by the inverter **41***a*.

[**0104**] The fuel pressure regulator **62** is disposed directly above the power control unit **41** so as to correspond longitudinally and laterally to the cooling air passage **18**. The fuel pressure regulator **62** deflects the cooling air that has flowed through the cooling air passage **18** into the internal space **9** toward the power control unit **41**. Thus the power control unit **41** can be efficiently cooled by the cooling air flowing in the internal space **9** immediately after passing the cooling air passage **18**.

[**0105**] Since the inlets **50** and **51** are positioned so as to overlap the first side wall **66***a* and the fuel pressure regulator **62** with respect to a longitudinal direction, the cooling air cooled by the first side wall **66***a* and the fuel pressure regulator **62** flows through the inlets **50** and **51**. Consequently, the engine body **30***a* and the muffler **18***b* are cooled efficiently.

[**0106**] An engine generator **1** in a second embodiment of the present invention will be described with reference to FIGS. **8** and **9**, in which parts like or corresponding to those of the engine generator **1** in the first embodiment are denoted by the same reference characters and the description thereof will be omitted for simplicity. The engine generator **1** in the second embodiment differs from the engine generator **1** in the first embodiment in that the engine generator **1** in the second embodiment is has a second carrying handle **17** defining a cooling air passage.

[**0107**] The second carrying handle **17** and an inward depressed part **24** define a second cooling air passage **19**. A lower end part **17***b***2** of a vertical part **17***b* of the second carrying handle **17** and an inclined part **24***a* define an inlet **19***a* of the cooling air passage **19**. The inlet **19***a* opens backward. A top part **17***a* of the second carrying handle **17** and the upper end of an inner part **24***b* define an outlet **19***b* of the cooling air passage **19**. The inlet **19***a* opens under the second carrying handle **17**. The cooling air passage **19** extends in a range substantially corresponding to a range between the opposite ends C**6***c* and C**6***d* of the back part C**6** of a case C. The width of the cooling air passage **19** is equal to that of a first cooling air passage **18** and is substantially equal to the width of a back cover **6**.

[**0108**] Cooling air that has flowed through the inlet **19***a* into the case C flows longitudinally into the internal space **9**, flows upward along the inside surface **17***b***3** of the vertical part **17***b* and the vertical inner part **24***b*. The top part **17***a* deflects the flow of the cooling air so that the cooling air flows longitudinally into the internal space **9**. The cooling air flows through the outlet **19***b* into the internal space **9** in the case C. The second carrying handle **17** and the inward depressed part **24** define the labyrinthine cooling air passage **19**.

[**0109**] A part of a reinforcing panel **11** lying in the cooling air passage **19** serves as a guide part **11***a* for making the cooling air flow smoothly into the internal space **9** in the case C.

[0110] The cooling air passage **19** serves also as a second hand space **29** into which hand is inserted to grip the second carrying handle **17** when the user carries the engine generator **1**. The cooling air passage **19** extends below the second carrying handle **17**. An inner part **19***c* of the cooling air passage **19** defined mainly by the vertical inner part **24***a* merges into the internal space **9** in the case C. Thus a part of the second hand space **29** extends below a top part C**4** of the case C in the internal space **9** in the case C.

[0111] The engine generator **1** in the second embodiment has the following functions and effects in addition to functions and effects similar to those of the engine generator **1** in the first embodiment.

[0112] The first carrying handle **16** and the second carrying handle **17** are combined with a front cover **5** and the back cover **6** of the case C on the opposite sides of a generator **40** and an engine **30**, respectively. The first carrying handle **16** and an inward depressed part **23** formed in the front cover **5** define the cooling air passage **18**. The second carrying handle **17** and an inward depressed part **24** formed in the back cover **6** define the cooling air passage **19**. The cooling air flows through the cooling air passages **18** and **19** formed on the opposite sides of the engine **30** and the generator **40**, respectively, into the internal space **9**. Thus the temperature of the cooling air immediately after the cooling air has flowed through the two cooling air passages **18** and **19** into the internal space **9** is comparatively low as compared with that of the cooling air that flowed through the single cooling air passage into the internal space **9**. Consequently, the engine **30** and the generator **40** are cooled efficiently by the cooling air having a comparatively low temperature. When the cooling air passages **18** and **19** are thus formed, hot air heated by the engine **30** and the generator **40** in the state of hot soak immediately after the stop of the engine **30** and rising upward by convection can easily flow to the outside through the cooling air passages **18** and **19** formed respectively in upper parts C**5***a* and C**6***a* of a front part C**5** and a back part C**6** of the case C. Thus the two cooling air passages **18** and **19** facilitate the flow of the cooling air outside the case C, and the natural ventilation of the internal space **9** in the case C is promoted. Consequently, the cooling air that has flowed through the two cooling air passages **18** and **19** into the internal space **9** improves the effect of cooling the engine **30**, the generator **40** and a fuel pressure regulator **41** and that of cooling the engine **20**, the generator **40** and the fuel pressure regulator **41** immediately after the stop of the engine **30**.

[0113] The cooling air passages **18** and **19** are formed opposite to each other with respect to a direction in which the power control unit **41**, the generator **40** an engine body **30***a* and a muffler **38***b* are arranged linearly. The cooling air that has flowed through cooling air passage **18** near the power control unit **41** cools the power control unit **41**, the generator **40**, the engine body **30***a* and the muffler **38***b* in that order. Most part of the cooling air that has flowed through the cooling air passage **19** near the engine **30** flows around a shroud **47**, is sucked through inlets **50** and **51** by a cooling fan **45** into a space surrounded by the shroud **47** and cools the generator **40**, the engine body **30***a* and the muffler **38***b* in that order. Consequently, the generator **40** and the engine **30** are cooled by the cooling air that has been scarcely heated by the power control unit **41**. Thus the effect of cooling the generator **40**, the engine body **30***a* and the muffler **38***b* can be improved.

[0114] Modifications in the Foregoing Embodiments will be Described.

[0115] A first hand space **93** may be formed instead of the first hand space **28**. The first hand space **93** does not extend only in the cooling air passage **18**. As shown in FIG. **10**, the first hand space **98** extends in part of the internal space **9** and a first cooling air passage **92**. More specifically, a first carrying handle **90** defines the first cooling air passage **92** together with an inward inclined part **91** of a front cover **5** and defines the internal space **9** together with the front cover **5** and other covers including a cover **4**. An inner part **90***b***1** of a vertical part **90***b* on which hand is put to grip the first carrying handle **90** is one of the members defining the internal space **9**. A second hand space defined by a second carrying handle and a back cover may be closed similarly to that of the first embodiment. The second hand space may be formed, similarly to the first hand space **93**, in part of the enclosed space **9** and a second cooling air passage defined by the second carrying handle and an inclined part of the back cover. As indicated by two-dot chain lines in FIG. **10**, the front cover **5** and the back cover do not need to be provided with inward depressed parts for defining the first and the second cooling air passage.

[0116] When inward depressed parts are not formed in the front cover **5** and the back cover, the cooling air passage **92** serves also as the first hand space **93**. The first hand space **93** is formed in the front cover **5** defining the enclosed space **9** and a part of the internal space **9** serves as a part of the first hand space **93**. Since the hand spaces are not formed outside the case C, protrusion of the first carrying handle **90** from the front cover **5** of the case C is prevented or limited to a small extent. Consequently, the engine generator **1** has a small size and needs a small space for storage and restrictions on the design of the appearance of the case C can be reduced. Thus the advantages of this modification are similar to those of the first embodiment.

[0117] Although the case C of each of the foregoing embodiments has the six covers, the case C may be made up of any suitable number of covers other than six covers.

[0118] The first carrying handle **16** the cooling air passages **19** and **92** may be formed in an upper part, a lower part or a vertically middle part of the front part C**5** of the case C or in the top part C**4** of the case C instead of in the upper end part of the front part C**5** of the case C, and the second carrying handle **17** and the cooling air passages **19** may be formed in an upper part, a lower part or a vertically middle part of the back part C**6** of the case C or in the top part C**4** of the case C instead of in the upper end part of the back part C**6** of the case C. Each of the cooling air passages **18**, **19** and **92** may be divided into a plurality of laterally arranged sections, provided that the first hand spaces **28** and **93** and the second hand space **29** are formed.

[0119] Although the first and the second carrying handle of the foregoing embodiments are formed entirely of carrying handle forming members, each of the first and the second carrying handle may be formed of a carrying handle forming member and part of the member of the case C, such as the front cover **5**, the back cover **6** or the top cover **4** formed

integrally with the carrying handle forming member, may be formed of a member joined to the member of the case. The first and the second carrying hand may be formed in a shape such that hands can be put thereon.

[**0120**] At least the fuel bottles **61**, the case **66** or the fuel pressure regulator **62** may be thermally connected through a heat-conducting member made of a material having a high heat conductivity or may be connected directly to the heat-radiating fins **41***b* of the power control unit **41**. Thus heat can be transferred from the power control unit **41** to at least the fuel bottles **61** or the fuel pressure regulator **62** by thermal conduction through the heat-conducting member. Consequently, heat generated by the power control unit **41** can be efficiently used by at least the fuel bottles **61** or the fuel pressure regulator **62**. Since heat generated by the power control unit **41** can be efficiently transferred at least the fuel bottles **61** or the fuel pressure regulator **62**, The effect of at least the fuel bottles **61** or the fuel pressure regulator **62** on cooling the power control unit **41** and the effect of the power control unit **41** on heating at least the fuel bottles **61** or the fuel pressure regulator **62** can be improved.

[**0121**] Either the fuel bottles **61** or the fuel pressure regulator **62** may be disposed relative to the power control unit **41** so that heat can be exchanged between the power control unit **41**, and the fuel bottles **61** or the fuel pressure regulator **62**.

[**0122**] The fuel bottles **61** does not necessarily placed in the fuel storage structure **60** and the case separating the fuel bottles **61** from the power control unit **41** may be omitted.

[**0123**] The first fuel gas may be supplied in gas phase to the fuel pressure regulator **62**. The second fuel gas may be a gas other than propane gas, such as a town gas. The second fuel source may be a gas supply pipe for carrying the second fuel gas.

[**0124**] The heat source of the heating device **80** may be any suitable heating means other than the electric heater, such as a heating means using the heat of the exhaust gas discharged from the engine, namely, waste heat. Since the fuel bottles **61** and the fuel pressure regulator **62** are heated by the heat generated by the power control unit **41** to suppress the drop of the temperatures of the fuel bottles **61** and the fuel pressure regulator **62**, the heat source may be that of a comparatively low temperature and the heat source can be chosen from a large variety of heat sources. The heating device for heating the fuel bottles **61** or the fuel pressure regulator **62** can be omitted.

1. An engine operated generator comprising a fuel receptacle storing a fuel gas in liquefied state, an engine that receives the fuel gas from the fuel receptacle, a fuel pressure regulator for regulating pressure of the fuel gas supplied from the fuel receptacle to the engine, a generator driven by the engine, and a power control unit for controlling power generated by the generator,

wherein at least one of the fuel receptacle and the fuel pressure regulator is arranged adjacent to the power control unit, for heat exchange with the power control unit.

2. The engine operated generator as claimed in claim 1, comprising a fuel storage chamber for storing the fuel receptacle, the fuel storage chamber having a side wall and a heat transfer device made of a heat conducting material, the fuel receptacle and the side wall being thermally connected via the heat transfer device, said side wall being disposed adjacent to the power control unit to enable heat exchange with the power control unit.

3. The engine operated generator as claimed in claim 2, wherein said heat transfer device comprises a plurality of columnar members provided between the fuel receptacle and the side wall of the fuel storage chamber in contact with the fuel receptacle and the side wall.

4. The engine operated generator as claimed in claim 1, wherein at least one of the fuel receptacle and the fuel pressure regulator is in direct thermal connection with the power control unit via a heat transfer device made of a material of high heat conductivity.

5. The engine operated generator as claimed in claim 1, wherein the power control unit has an inverter.

6. The engine operated generator as claimed in claim 1, comprising a case forming an internal space for accommodating the fuel receptacle, the engine and the generator; and a cooling air passage for conducting cooling air from said internal space sequentially past the fuel receptacle, the power control unit in this order, to the generator and the engine to cool the same.

7. The engine operated generator as claimed in claim 12, wherein the fuel pressure regulator and the power control unit are disposed on a side opposite the fuel storage chamber with respect to said side wall, and the power control unit is disposed below the fuel pressure regulator.

8. The engine operated generator as claimed in claim 7, wherein said case has a side wall having an upper edge along which a cooling air inlet passage is provided, and the fuel pressure regulator is provided immediately downstream of the cooling air inlet passage.

9. The engine operated generator as claimed in claim 2, wherein the power control unit has an inverter.

10. The engine operated generator as claimed in claim 3, wherein the power control unit has an inverter.

11. The engine operated generator as claimed in claim 4, wherein the power control unit has an inverter.

12. The engine operated generator as claimed in claim 2, comprising a case forming an internal space for accommodating the fuel receptacle, the engine and the generator; and a cooling air passage for conducting cooling air from said internal space sequentially past the fuel receptacle, the power control unit in this order, to the generator and the engine to cool the same.

13. The engine operated generator as claimed in claim 3, comprising a case forming an internal space for accommodating the fuel receptacle, the engine and the generator; and a cooling air passage for conducting cooling air from said internal space sequentially past the fuel receptacle, the power control unit in this order, to the generator and the engine to cool the same.

14. The engine operated generator as claimed in claim 4, comprising a case forming an internal space for accommodating the fuel receptacle, the engine and the generator; and a cooling air passage for conducting cooling air from said internal space sequentially past the fuel receptacle, the power control unit in this order, to the generator and the engine to cool the same.

15. The engine operated generator as claimed in claim 13, wherein the fuel pressure regulator and the power control unit are disposed on a side opposite the fuel storage chamber

with respect to said side wall, and the power control unit is disposed below the fuel pressure regulator.

16. The engine operated generator as claimed in claim 14, wherein the fuel pressure regulator and the power control unit are disposed on a side opposite the fuel storage chamber with respect to said side wall, and the power control unit is disposed below the fuel pressure regulator.

17. The engine operated generator as claimed in claim 15, wherein said case has a side wall having an upper edge along which a cooling air inlet passage is provided, and the fuel pressure regulator is provided immediately downstream of the cooling air inlet passage.

18. The engine operated generator as claimed in claim 16, wherein said case has a side wall having an upper edge along which a cooling air inlet passage is provided, and the fuel pressure regulator is provided immediately downstream of the cooling air inlet passage.

* * * * *