(12) INTERNATIONAL APPLICATION PUBLISHED UNDER THE PATENT COOPERATION TREATY (PCT)

(19) World Intellectual Property Organization
International Bureau

(43) International Publication Date
7 January 2016 (07.01.2016)

WIPO | PCT

(10) International Publication Number
WO 2016/001925 A1

(51) International Patent Classification:
A61M 11/04 (2006.01) *A24F 47/00* (2006.01)
A61M 15/00 (2006.01)

(21) International Application Number:
PCT/IL2015/050677

(22) International Filing Date:
30 June 2015 (30.06.2015)

(25) Filing Language: English

(26) Publication Language: English

(30) Priority Data:

62/019,225	30 June 2014 (30.06.2014)	US
62/035,588	11 August 2014 (11.08.2014)	US
62/085,772	1 December 2014 (01.12.2014)	US
62/086,208	2 December 2014 (02.12.2014)	US
62/164,710	21 May 2015 (21.05.2015)	US

(71) Applicant: **SYQE MEDICAL LTD.** [IL/IL]; 14 HaTchiya Street, 6816914 Tel-Aviv (IL).

(72) Inventors: **DAVIDSON, Perry**; 18 Brant Street, 6515916 Tel-Aviv (IL). **SCHORR, Aaron**; 22 Barkan Street, Apt. 36, 5821037 Holon (IL). **SCHWARTZ, Benny**; Sde Eliezer 334, 1220500 Sde Eliezer (IL). **LIFSHITZ, Roee**; Moshav Beit Hillel, 1225500 Doar-Na Galil Elyon (IL).

(74) Agents: **EHRLICH, Gal** et al.; G.E. EHRLICH (1995) LTD., 11 Menachem Begin Road, 5268104 Ramat Gan (IL).

(81) Designated States *(unless otherwise indicated, for every kind of national protection available)*: AE, AG, AL, AM, AO, AT, AU, AZ, BA, BB, BG, BH, BN, BR, BW, BY, BZ, CA, CH, CL, CN, CO, CR, CU, CZ, DE, DK, DM, DO, DZ, EC, EE, EG, ES, FI, GB, GD, GE, GH, GM, GT, HN, HR, HU, ID, IL, IN, IR, IS, JP, KE, KG, KN, KP, KR, KZ, LA, LC, LK, LR, LS, LU, LY, MA, MD, ME, MG, MK, MN, MW, MX, MY, MZ, NA, NG, NI, NO, NZ, OM, PA, PE, PG, PH, PL, PT, QA, RO, RS, RU, RW, SA, SC, SD, SE, SG, SK, SL, SM, ST, SV, SY, TH, TJ, TM, TN, TR, TT, TZ, UA, UG, US, UZ, VC, VN, ZA, ZM, ZW.

(84) Designated States *(unless otherwise indicated, for every kind of regional protection available)*: ARIPO (BW, GH, GM, KE, LR, LS, MW, MZ, NA, RW, SD, SL, ST, SZ, TZ, UG, ZM, ZW), Eurasian (AM, AZ, BY, KG, KZ, RU,

[Continued on next page]

(54) Title: DRUG DOSE CARTRIDGE FOR AN INHALER DEVICE

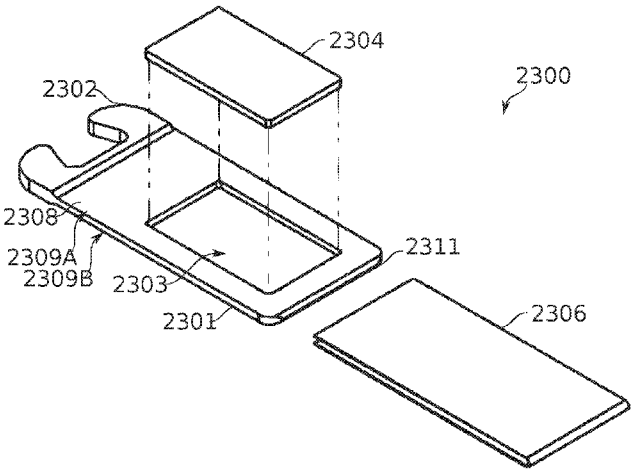

FIG. 5A

(57) Abstract: Devices and methods are described for preparing, managing, and/or administering metered doses of substances for vaporized administration. In some embodiments, dose cartridges comprising at least one botanical substance include a heating element integrated into the cartridge in close contact with the botanical substance. In some embodiments, cartridge-mounted doses are stored in a magazine, optionally in carousel form, before use. Transport of a cartridge from a magazine to an electrically operated vaporizing chamber which activates the heating element is provided by a mechanical pickup means.

WO 2016/001925 A1

TJ, TM), European (AL, AT, BE, BG, CH, CY, CZ, DE, DK, EE, ES, FI, FR, GB, GR, HR, HU, IE, IS, IT, LT, LU, LV, MC, MK, MT, NL, NO, PL, PT, RO, RS, SE, SI, SK, SM, TR), OAPI (BF, BJ, CF, CG, CI, CM, GA, GN, GQ, GW, KM, ML, MR, NE, SN, TD, TG).

Declarations under Rule 4.17:

— *of inventorship (Rule 4.17(iv))*

Published:

— *with international search report (Art. 21(3))*

— *before the expiration of the time limit for amending the claims and to be republished in the event of receipt of amendments (Rule 48.2(h))*

DRUG DOSE CARTRIDGE FOR AN INHALER DEVICE

RELATED APPLICATIONS

This application claims the benefit of priority under 35 USC §119(e) of U.S. Provisional Patent Application No. 62/019,225 filed June 30, 2014; U.S. Provisional Patent Application No. 62/035,588 filed August 11, 2014; U.S. Provisional Patent Application No. 62/085,772 filed December 1, 2014; U.S. Provisional Patent Application No. 62/086,208 filed December 2, 2014; and U.S. Provisional Patent Application No. 62/164,710 filed May 21, 2015. This application claims the benefit of priority under 35 USC §119(a) of co-filed application with Attorney Docket No. 62783 entitled METHOD AND DEVICE FOR VAPORIZATION AND INHALATION OF ISOLATED SUBSTANCES and filed June 30, 2015; co-filed application with Attorney Docket No. 62784 entitled FLOW REGULATING INHALER DEVICE and filed June 30, 2015; and co-filed applications with Attorney Docket Nos. 62791, 63210, and 63211 entitled METHODS, DEVICES AND SYSTEMS FOR PULMONARY DELIVERY OF ACTIVE AGENTS filed June 30, 2015; the contents of which are incorporated herein by reference in their entirety.

FIELD AND BACKGROUND OF THE INVENTION

The present disclosure, in some embodiments thereof, relates to pulmonary delivery of a substance using a personal inhaler device and, more particularly, but not exclusively, to dosage manufacture and handling for administration.

U.S. Patent Number 5,655,520 teaches: "A nebulizer is improved by placing a flexible valve in the ambient air inlet tube. Inhalation suction and Venturi effect shut down the flexible valve in proportion to the strength of the inhalation. Thus, the same output flow rate is obtained even with variable strength inhalations. Medications can be properly administered by controlled inhalation flow rates. In an alternate embodiment a metered dose inhaler (MDI) is outfitted with a similar flexible valve. Once again the patient is forced to inhale at a constant flow rate, thus causing the medication to seep deeply into the lungs. In both embodiments the flexible valve is preferably shaped in a duck billed fashion with air flow flowing toward the narrow end of the duck bill."

SUMMARY OF THE INVENTION

According to an aspect of some embodiments, there is provided a dose cartridge for an inhaler device, the dose cartridge comprising: a flat pallet of airflow-permeable material including a heat-vaporizing drug substance, the pallet having two opposing faces and being positioned in the dose cartridge so as to expose the two faces to airflow; a supporting member coupled to the pallet to support the pallet from at least one side of the pallet joining the two faces; and an electrically resistive heating element extending at least partially across at least one of the two opposing faces from an attachment with the supporting member.

According to some embodiments, the supporting member frames at least a portion of at least three sides of the pallet.

According to some embodiments, the supporting member extends between the two faces of the pallet along an edge of the pallet.

According to some embodiments, the resistive heating element is in thermal contact with and extends across at least two opposite surfaces of the pallet.

According to some embodiments, the resistive heating element comprises a U-shape with two ends around a hollow in which the pallet is positioned.

According to some embodiments, an electrical current flows across the two opposite surfaces when a voltage is applied between the two ends.

According to some embodiments, the resistive heating element comprises at least two resistive heating elements, wherein each resistive heating element is in thermal contact with and extends across at least a portion of the pallet.

According to some embodiments, the at least two resistive heating elements extend across opposite surfaces of the pallet.

According to some embodiments, the resistive heating element has a portion encased and extending within at least a portion of the pallet.

According to some embodiments, the resistive heating element extends across a surface of the pallet, and comprises a plurality of protrusions into the pallet.

According to some embodiments, at least a portion of the resistive heating element extending across the pallet is permeable to the passage of air.

According to some embodiments, a portion of the resistive heating element extending across the pallet comprises a barrier which prevents a granulate portion of the pallet from leaving the inhaler dose cartridge.

According to some embodiments, the resistive heating unit comprises a woven mesh.

According to some embodiments, the resistive heating unit comprises at least one ribbon of etched metal foil.

According to some embodiments, the at least one ribbon of etched metal foil is backed by a polymer backing comprising a plurality of perforations making it permeable to the passage of air.

According to some embodiments, the at least one ribbon of etched metal foil comprises a narrowed region having elevated resistance, which melts to break electrical continuity along the at least one ribbon during dissipation of electrical power applied after release the heat-vaporizing drug substance.

According to some embodiments, the at least one ribbon of etched metal foil is attached to a fuse element configured to break electrical continuity along the at least one ribbon during dissipation of electrical power applied after release the heat-vaporizing drug substance.

According to some embodiments, at least a portion of the resistive heating element is embedded in the pallet.

According to some embodiments, the air-permeable support member is sufficiently closed to prevent a granulate portion of the pallet from leaving the inhaler dose cartridge.

According to some embodiments, the air-permeable support member separates the pallet and the heating element.

According to some embodiments, the material comprises cannabis.

According to some embodiments, the material comprises at least one botanical substance selected from the group consisting of *Cannabis sativa*, *Cannabis indica*, *Cannabis ruderalis*, *Acacia* spp., *Amanita muscaria*, Yage, *Atropa belladonna*, *Areca catechu*, *Brugmansia* spp., *Brunfelsia latifolia*, *Desmanthus illinoensis*, *Banisteriopsis caapi*, *Trichocereus* spp., *Theobroma cacao*, *Capsicum* spp., *Cestrum* spp., *Erythroxylum coca*, *Solenostemon scutellarioides*, *Arundo donax*, *Coffea arabica*,

Datura spp., *Desfontainia* spp., *Diplopterys cabrerana*, *Ephedra sinica*, *Claviceps purpurea*, *Paullinia cupana*, *Argyreia nervosa*, *Hyoscyamus niger*, *Tabernanthe iboga*, *Lagochilus inebriens*, *Justicia pectoralis*, *Sceletium tortuosum*, *Piper methysticum*, *Catha edulis*, *Mitragyna speciosa*, *Leonotis leonurus*, *Nymphaea* spp., *Nelumbo* spp., *Sophora secundiflora*, *Mucuna pruriens*, *Mandragora officinarum*, *Mimosa tenuiflora*, *Ipomoea violacea*, *Psilocybe* spp., *Panaeolus* spp., *Myristica fragrans*, *Turbina corymbosa*, *Passiflora incarnata*, *Lophophora williamsii*, *Phalaris* spp., *Duboisia hopwoodii*, *Papaver somniferum*, *Psychotria viridis*, spp., *Salvia divinorum*, *Combretum quadrangulare*, *Trichocereus pachanoi*, *Heimia salicifolia*, *Stipa robusta*, *Solandra* spp., *Hypericum perforatum*, *Peganum harmala*, *Tabernaemontana* spp., *Camellia sinensis*, *Nicotiana tabacum*, *Nicotiana rustica*, *Virola theidora*, *Voacanga africana*, *Lactuca virosa*, *Artemisia absinthium*, *Ilex paraguariensis*, *Anadenanthera* spp., *Corynanthe yohimbe*, *Calea zacatechichi*, *Coffea* spp. (*Rubiaceae*), *Sapindaceae* spp., *Camellia* spp., *Malvaceae* spp., *Aquifoliaceae* spp., *Hoodia* spp. *Chamomilla recutita*, *Passiflora incarnate*, *Camellia sinensis*, *Mentha piperita*, *Mentha spicata*, *Rubus idaeus*, *Eucalyptus globulus*, *Lavandula officinalis*, *Thymus vulgaris*, *Melissa officinalis*, Tobacco, Aloe Vera, Angelica, Anise, Ayahuasca (*Banisteriopsis caapi*), Barberry, Black Horehound, Blue Lotus, Burdock, Camomille/Chamomile, Caraway, Cat's Claw, Clove, Comfrey, Corn Silk, Couch Grass, Damiana, Damiana, Dandelion, Ephedra, Eucalyptus, Evening Primrose, Fennel, Feverfew, Fringe Tree, Garlic, Ginger, Ginkgo, Ginseng, Goldenrod, Goldenseal, Gotu Kola, Green Tea, Guarana, Hawthorn, Hops, Horsetail, Hyssop, Kola Nut, Kratom, Lavender, Lemon Balm, Licorice, Lion's Tail (Wild Dagga), Maca Root, Marshmallow, Meadowsweet, Milk Thistle, Motherwort, Passion Flower, Passionflower, Peppermint, Prickly Poppy, Purslane, Raspberry Leaf, Red Poppy, Sage, Saw Palmetto, Sida Cordifolia, Sinicuichi (Mayan Sun Opener), Spearmint, Sweet Flag, Syrian Rue (*Peganum harmala*), Thyme, Turmeric, Valerian, Wild Yam, Wormwood, Yarrow, Yerba Mate, and Yohimbe.

According to some embodiments, the electrically resistive heating element comprises an electrode contact-receiving region on either side of a region extending across the pallet.

According to some embodiments, the inhaler dose cartridge comprises a plurality of heating element regions, each region being separately configured to receive electric current.

According to some embodiments, the plurality of heating elements is associated with a corresponding plurality of pallets.

According to some embodiments, the resistive heating element comprises an attachment element, shaped for attachment to the transport arm of a dose puller.

According to some embodiments, at least a portion of the dose cartridge is configured to allow a flow through the pallet at a rate of at least 0.5 liters of gas per minute under a pulling vacuum of at least 1 kPa.

According to some embodiments, the supporting member is surrounded by the pallet where it extends between the two faces of the pallet.

According to some embodiments, the supporting member comprises a hollow region open on at least one of the two faces.

According to some embodiments, the resistive heating element is a metal resistive heating element.

According to an aspect of some embodiments, there is provided a method of manufacturing an inhaler dose cartridge for pulmonary delivery of a heat-vaporizing drug substance, comprising: preparing a pallet of material comprising the heat-vaporizing drug substance; attaching the pallet to a supporting member extending between the two faces of the pallet; and attaching an electrically resistive heating element to the pallet.

According to some embodiments, the preparing the pallet comprises: placing a granulated botanical substance within a dose chamber on a planar surface; and leveling the botanical substance within the dose chamber.

According to some embodiments, preparing the pallet comprises: placing a granulated botanical substance within a dose chamber on a planar surface; vibrating the planar surface until the granulated botanical substance is leveled; and pressing the leveled botanical substance, reducing the volume thereof by at least 50% to form a pallet.

According to some embodiments, preparing the pallet comprises cutting a tape section from a botanical substance formed into a tape.

According to some embodiments, preparing the pallet comprises loading an air permeable granulated botanical material with a gel, fluid or powder comprising the heat-vaporizing drug substance.

According to some embodiments, the material comprises cannabis.

According to some embodiments, the material comprises at least one botanical substance selected from the group consisting of *Cannabis sativa*, *Cannabis indica*, *Cannabis ruderalis*, *Acacia* spp., *Amanita muscaria*, Yage, *Atropa belladonna*, *Areca catechu*, *Brugmansia* spp., *Brunfelsia latifolia*, *Desmanthus illinoensis*, *Banisteriopsis caapi*, *Trichocereus* spp., *Theobroma cacao*, *Capsicum* spp., *Cestrum* spp., *Erythroxylum coca*, *Solenostemon scutellarioides*, *Arundo donax*, *Coffea arabica*, *Datura* spp., *Desfontainia* spp., *Diplopterys cabrerana*, *Ephedra sinica*, *Claviceps purpurea*, *Paullinia cupana*, *Argyreia nervosa*, *Hyoscyamus niger*, *Tabernanthe iboga*, *Lagochilus inebriens*, *Justicia pectoralis*, *Sceletium tortuosum*, *Piper methysticum*, *Catha edulis*, *Mitragyna speciosa*, *Leonotis leonurus*, *Nymphaea* spp., *Nelumbo* spp., *Sophora secundiflora*, *Mucuna pruriens*, *Mandragora officinarum*, *Mimosa tenuiflora*, *Ipomoea violacea*, *Psilocybe* spp., *Panaeolus* spp., *Myristica fragrans*, *Turbina corymbosa*, *Passiflora incarnata*, *Lophophora williamsii*, *Phalaris* spp., *Duboisia hopwoodii*, *Papaver somniferum*, *Psychotria viridis*, spp., *Salvia divinorum*, *Combretum quadrangulare*, *Trichocereus pachanoi*, *Heimia salicifolia*, *Stipa robusta*, *Solandra* spp., *Hypericum perforatum*, *Peganum harmala*, *Tabernaemontana* spp., *Camellia sinensis*, *Nicotiana tabacum*, *Nicotiana rustica*, *Virola theidora*, *Voacanga africana*, *Lactuca virosa*, *Artemisia absinthium*, *Ilex paraguariensis*, *Anadenanthera* spp., *Corynanthe yohimbe*, *Calea zacatechichi*, *Coffea* spp. (*Rubiaceae*), *Sapindaceae* spp., *Camellia* spp., *Malvaceae* spp., *Aquifoliaceae* spp., *Hoodia* spp. *Chamomilla recutita*, *Passiflora incarnate*, *Camellia sinensis*, *Mentha piperita*, *Mentha spicata*, *Rubus idaeus*, *Eucalyptus globulus*, *Lavandula officinalis*, *Thymus vulgaris*, *Melissa officinalis*, Tobacco, Aloe Vera, Angelica, Anise, Ayahuasca (*Banisteriopsis caapi*), Barberry, Black Horehound, Blue Lotus, Burdock, Camomille/Chamomile, Caraway, Cat's Claw, Clove, Comfrey, Corn Silk, Couch Grass, Damiana, Damiana, Dandelion, Ephedra, Eucalyptus, Evening Primrose, Fennel, Feverfew, Fringe Tree, Garlic, Ginger, Ginkgo, Ginseng, Goldenrod, Goldenseal, Gotu Kola, Green Tea, Guarana, Hawthorn, Hops, Horsetail, Hyssop, Kola Nut, Kratom, Lavender, Lemon Balm, Licorice, Lion's

Tail (Wild Dagga), Maca Root, Marshmallow, Meadowsweet, Milk Thistle, Motherwort, Passion Flower, Passionflower, Peppermint, Prickly Poppy, Purslane, Raspberry Leaf, Red Poppy, Sage, Saw Palmetto, Sida Cordifolia, Sinicuichi (Mayan Sun Opener), Spearmint, Sweet Flag, Syrian Rue (*Peganum harmala*), Thyme, Turmeric, Valerian, Wild Yam, Wormwood, Yarrow, Yerba Mate, and Yohimbe.

According to some embodiments, the granulated botanical substance comprises botanical substance having maintained its microstructure intact.

According to some embodiments, the preparing a pallet comprises freezing a botanical substance, and grinding the frozen botanical substance to granulate it, wherein the grinding is substantially without breaking the microstructure of the botanical substance.

According to some embodiments, the unbroken microstructure comprises at least 90% of vacuoles containing the drug substance remaining unbroken after granulation.

According to some embodiments, preparing the pallet comprises loading an air permeable material with a gel, fluid or powder comprising the heat-vaporizing drug substance.

According to some embodiments, the attaching the pallet to a supporting member is performed during formation of the pallet.

According to an aspect of some embodiments, there is provided an inhaler dose cartridge for pulmonary delivery of a heat-vaporizing drug substance to a user comprising: an airflow-permeable pallet of a material comprising the heat-vaporizing drug, wherein the pallet is oriented within the dose cartridge such that it is subjected to airflow through the pallet between two face surfaces of thereof; a supporting member extending between the two faces of the pallet; and an airflow permeable retaining element extending across at least one of the two face surfaces and connected to the supporting member.

According to some embodiments, the material of the pallet comprises friable material.

According to some embodiments, the friable material comprises botanical substance having intact microstructure of the natural botanical substance.

According to some embodiments, the inhaler dose cartridge comprises an electrically resistive heating element in thermal communication with the pallet.

According to some embodiments, the electrically resistive heating element extends across at least one of the two face surfaces.

According to some embodiments, the airflow permeable retaining element comprises the electrically resistive heating element.

According to some embodiments, the inhaler dose cartridge comprises a frame element which at least partially surrounds the pallet on one or more sides adjacent to the retaining element.

According to some embodiments, the frame element comprises an aperture into which the pallet of material is fittingly pressed.

According to some embodiments, the frame element comprises a polymer resistant to heat at the temperature at which the heat-vaporizing drug substance vaporizes.

According to some embodiments, the frame element is attached to the resistive heating element by at least partial melting of the polymer frame, such that material of the polymer frame flows into one or more apertures in the resistive heating element.

According to some embodiments, the electrically resistive heating element is at least partially embedded in a portion of the frame element.

According to some embodiments, the electrically resistive heating element is at least partially embedded in the pallet.

According to some embodiments, the frame element comprises a transport arm interlock region, shaped for attachment to the transport arm of a dose puller.

According to an aspect of some embodiments, there is provided a clamping chamber for an inhaler dose cartridge for pulmonary delivery of a heat-vaporizing drug substance to a user comprising: a cartridge transport configured to move the inhaler dose cartridge from a storage position into a use position; a holder for holding a dose cartridge such that a heat-vaporizing drug substance is in sealed alignment with an air conduit of the clamping chamber; and electrodes positioned to be in electrical contact with at least two electrical contact receiving regions of an electrically resistive heating element of an inhaler dose cartridge in the clamping chamber.

According to some embodiments, the cartridge transport comprises a dose pulling arm, shaped to interlock with a receiving region of the dose cartridge such that

movement of the dose pulling arm moves a dose cartridge into or out of the use position.

According to some embodiments, the sealed alignment defines a pathway through a pallet of material within a lumen along which air passing through the pallet continues to an exit aperture leading to the pulmonary organs of the user.

According to some embodiments, the holder comprises the cartridge transport configured to move the inhaler dose cartridge.

According to some embodiments, the clamping chamber comprises: a plurality of the cartridge transports each configured to move a corresponding inhaler dose cartridge; a plurality of holders corresponding to the plurality of cartridge transports; and corresponding electrodes for each of the cartridge transports.

According to some embodiments, the plurality of holders is positioned sequentially along the air conduit such that airflow through one of the held dose cartridges passes through the other.

According to some embodiments, the plurality of holders is positioned such that each holder receives a separate airflow.

According to some embodiments, the air conduit comprises a plurality of lumens corresponding to the plurality of holders, and each of the holders is positioned in a separate one of the plurality of lumens.

According to some embodiments, each of the holders is positioned in a shared lumen of the air conduit.

According to some embodiments, at least one of the holders is operable to position a blocker which at least partially blocks airflow through the position where a dose cartridge is held.

According to some embodiments, the cartridge transport is configured to move any a plurality of inhaler dose cartridges to one of the plurality of holders.

According to an aspect of some embodiments, there is provided an inhaler device comprising the clamping chamber above.

According to an aspect of some embodiments, there is provided an inhaler device comprising two or more of the clamping chambers above.

According to some embodiments, the inhaler device comprises a dose cartridge dispenser comprising a plurality of dose cartridges within a closed container.

According to some embodiments, the plurality of dose cartridges comprise dose cartridges differing in at least one from among the group consisting of drug substance amount, drug substance concentration, and drug substance composition.

According to some embodiments, the inhaler device comprises a controller configured to select a dose cartridge from the plurality of dose cartridges in accordance with a dosing regimen.

According to some embodiments, the controller is configured to adjust the dosing regimen according to a progress of the regimen.

According to an aspect of some embodiments, there is provided a dose cartridge dispenser comprising a plurality of dose cartridges within a closed container, and including an interlock which, after dispensing of a first dose cartridge from the container, prevents dispensing of a second dose cartridge from the container until the first dose cartridge is returned to the dispenser.

According to some embodiments, the dose cartridge is dispensed to a substance vaporizing unit, and the operation of the interlock comprises inserting the substance vaporizing unit into the dose cartridge dispenser.

According to an aspect of some embodiments, there is provided a vaporizer device, comprising: a compartment sized to fittingly receive a dose cartridge from a dose cartridge container while the vaporizer device is fitted to the dose cartridge container, and a power unit operable, while the vaporizer device is removed from the dose cartridge container, to deliver current to a heating element of the fittingly received dose cartridge, for volatilization of a volatilizing substance contained by the dose cartridge.

According to some embodiments, the vaporizer device includes the dose cartridge container, the dose cartridge container containing a plurality of the dose cartridges.

Unless otherwise defined, all technical and/or scientific terms used herein have the same meaning as commonly understood by one of ordinary skill in the art to which the invention pertains. Although methods and materials similar or equivalent to those described herein can be used in the practice or testing of embodiments of the invention, exemplary methods and/or materials are described below. In case of conflict, the patent

specification, including definitions, will control. In addition, the materials, methods, and examples are illustrative only and are not intended to be necessarily limiting.

As will be appreciated by one skilled in the art, aspects of the present invention may be embodied as a system, method or computer program product. Accordingly, aspects of the present invention may take the form of an entirely hardware embodiment, an entirely software embodiment (including firmware, resident software, micro-code, etc.) or an embodiment combining software and hardware aspects that may all generally be referred to herein as a "circuit," "module" or "system." Furthermore, some embodiments of the present invention may take the form of a computer program product embodied in one or more computer readable medium(s) having computer readable program code embodied thereon. Implementation of the method and/or system of some embodiments of the invention can involve performing and/or completing selected tasks manually, automatically, or a combination thereof. Moreover, according to actual instrumentation and equipment of some embodiments of the method and/or system of the invention, several selected tasks could be implemented by hardware, by software or by firmware and/or by a combination thereof, *e.g.*, using an operating system.

For example, hardware for performing selected tasks according to some embodiments of the invention could be implemented as a chip or a circuit. As software, selected tasks according to some embodiments of the invention could be implemented as a plurality of software instructions being executed by a computer using any suitable operating system. In an exemplary embodiment of the invention, one or more tasks according to some exemplary embodiments of method and/or system as described herein are performed by a data processor, such as a computing platform for executing a plurality of instructions. Optionally, the data processor includes a volatile memory for storing instructions and/or data and/or a non-volatile storage, for example, a magnetic hard-disk and/or removable media, for storing instructions and/or data. Optionally, a network connection is provided as well. A display and/or a user input device such as a keyboard or mouse are optionally provided as well.

Any combination of one or more computer readable medium(s) may be utilized for some embodiments of the invention. The computer readable medium may be a computer readable signal medium or a computer readable storage medium. A computer readable storage medium may be, for example, but not limited to, an electronic,

magnetic, optical, electromagnetic, infrared, or semiconductor system, apparatus, or device, or any suitable combination of the foregoing. More specific examples (a non-exhaustive list) of the computer readable storage medium would include the following: an electrical connection having one or more wires, a portable computer diskette, a hard disk, a random access memory (RAM), a read-only memory (ROM), an erasable programmable read-only memory (EPROM or Flash memory), an optical fiber, a portable compact disc read-only memory (CD-ROM), an optical storage device, a magnetic storage device, or any suitable combination of the foregoing. In the context of this document, a computer readable storage medium may be any tangible medium that can contain, or store a program for use by or in connection with an instruction execution system, apparatus, or device.

A computer readable signal medium may include a propagated data signal with computer readable program code embodied therein, for example, in baseband or as part of a carrier wave. Such a propagated signal may take any of a variety of forms, including, but not limited to, electro-magnetic, optical, or any suitable combination thereof. A computer readable signal medium may be any computer readable medium that is not a computer readable storage medium and that can communicate, propagate, or transport a program for use by or in connection with an instruction execution system, apparatus, or device.

Program code embodied on a computer readable medium and/or data used thereby may be transmitted using any appropriate medium, including but not limited to wireless, wireline, optical fiber cable, RF, etc., or any suitable combination of the foregoing.

Computer program code for carrying out operations for some embodiments of the present invention may be written in any combination of one or more programming languages, including an object oriented programming language such as Java, Smalltalk, C++ or the like and conventional procedural programming languages, such as the “C” programming language or similar programming languages. The program code may execute entirely on the user's computer, partly on the user's computer, as a stand-alone software package, partly on the user's computer and partly on a remote computer or entirely on the remote computer or server. In the latter scenario, the remote computer may be connected to the user's computer through any type of network, including a local

area network (LAN) or a wide area network (WAN), or the connection may be made to an external computer (for example, through the Internet using an Internet Service Provider).

Some embodiments of the present invention may be described below with reference to flowchart illustrations and/or block diagrams of methods, apparatus (systems) and computer program products according to embodiments of the invention. It will be understood that each block of the flowchart illustrations and/or block diagrams, and combinations of blocks in the flowchart illustrations and/or block diagrams, can be implemented by computer program instructions. These computer program instructions may be provided to a processor of a general purpose computer, special purpose computer, or other programmable data processing apparatus to produce a machine, such that the instructions, which execute via the processor of the computer or other programmable data processing apparatus, create means for implementing the functions/acts specified in the flowchart and/or block diagram block or blocks.

These computer program instructions may also be stored in a computer readable medium that can direct a computer, other programmable data processing apparatus, or other devices to function in a particular manner, such that the instructions stored in the computer readable medium produce an article of manufacture including instructions which implement the function/act specified in the flowchart and/or block diagram block or blocks.

The computer program instructions may also be loaded onto a computer, other programmable data processing apparatus, or other devices to cause a series of operational steps to be performed on the computer, other programmable apparatus or other devices to produce a computer implemented process such that the instructions which execute on the computer or other programmable apparatus provide processes for implementing the functions/acts specified in the flowchart and/or block diagram block or blocks.

BRIEF DESCRIPTION OF THE SEVERAL VIEWS OF THE DRAWINGS

Some embodiments of the invention are herein described, by way of example only, with reference to the accompanying drawings. With specific reference now to the drawings in detail, it is stressed that the particulars shown are by way of example, and

for purposes of illustrative discussion of embodiments of the invention. In this regard, the description taken with the drawings makes apparent to those skilled in the art how embodiments of the invention may be practiced.

In the drawings:

FIG. 1 is a schematic flowchart of a method of preparing a granulated botanical substance for use in dose packaging with an inhaler device, according to some embodiments;

FIG. 2 is a schematic flowchart of a method of packaging a botanical substance to a dose cartridge for use with an inhaler device, according to some embodiments;

FIG. 3 is a schematic view of a botanical substance grinding apparatus, according to some embodiments;

FIG. 4 is a schematic view of the grinding plate of a botanical substance grinding head, according to some embodiments;

FIGs. 5A–5B are schematic views of a dose cartridge, disassembled and assembled, according to some embodiments;

FIGs. 5C–5M schematically illustrate alternative constructions of dose cartridges, according to some embodiments;

FIGs. 6A–6E schematically illustrate a carousel-type dose delivery system for use with an inhaler device, according to some embodiments;

FIGs. 7A–7B schematically illustrate a clamping chamber for heating and delivery of vaporized substance from a dose cartridge, according to some embodiments;

FIG. 7C schematically illustrates a cross section of a dose cartridge within a clamping chamber clamping a cartridge, according to some embodiments;

FIGs. 8A–8B schematically illustrate a dose delivery device for loading from a dose magazine (*e.g.* a carousel), and separable from the magazine for delivery of the dose itself, according to some embodiments; and

FIG. 9 schematically illustrates an interlock-protected dose dispensing device, together with a removable dose administration assembly, according to some embodiments;

FIG. 10 schematically illustrates a carousel arranged for potentially simultaneous administration of substances from a plurality of dose cartridges held within two separate carousel magazines, according to some embodiments;

FIGs. 11A–11C schematically illustrate a linear-type dose cartridge magazine for use with an inhaler device, according to some embodiments;

FIG. 12 schematically illustrates a carousel arranged in an inhaler for simultaneous administration of substances from a plurality of dose cartridge clamping chambers in a corresponding plurality of extraction airflow conduits, according to some embodiments;

FIGs. 13A–13B schematically illustrate a linear-type dose cartridge magazine and dual-dose cartridge transport in two sequential positions, according to some embodiments; and

FIGs. 13C–13D schematically illustrate the dual-dose cartridge transport of *Figures 13A–13B* in two sequential positions, according to some embodiments.

DESCRIPTION OF SPECIFIC EMBODIMENTS OF THE INVENTION

The present disclosure, in some embodiments thereof, relates to pulmonary delivery of a substance using a personal inhaler device and, more particularly, but not exclusively, to dosage manufacture and handling for administration.

Overview

An aspect of some embodiments relates to processing and packaging of a heat-vaporizing drug substance to a cartridge providing an integrated heating element.

In some embodiments, the heat-vaporizing drug substance comprises a compound having at least one medicinal and/or somatic and/or psychoactive effect. Optionally the compound includes THC and/or nicotine. In some embodiments, the heat-vaporizing drug substance vaporizes at a temperature requiring a substantial exogenous heat input to reach a temperature above ambient temperature. For example, the substance vaporizes at a temperature within the range from 80°C-250°C, or within another range having the same, higher, lower, intermediate and/or intermediate bounds. In some embodiments, the substance vaporizes at a temperature above 80°C, 100°C, 150°C, 200°C, 230°C, or another higher, lower, or intermediate temperature. In some embodiments, the time to reach a volatilizing temperature is, for example, about in a range between about 100 msec-5 sec, 100-750 msec, 150-300 msec, or another range having the same, larger, smaller, and/or intermediate bounds. In particular, the time is,

for example, 250 msec, 500 msec, 1000 msec, or another greater, smaller, or intermediate value.

In some embodiments, the heat-vaporizing drug substance is a volatilizing substance distributed throughout a pallet comprising a carrier material. Optionally, the carrier material comprises at least one botanical substance, such as cannabis, tobacco, and/or other plant matter. Additionally or alternatively, the carrier material comprises a porous and air-permeable absorptive matrix; for example, a foam, sponge, felt, and/or another fiber matrix, which absorbs the heat-vaporizing drug substance to fix it into place. In some embodiments, the absorptive matrix is substantially non-friable, providing sufficient strength, for example, to allow direct attachment of other drug cartridge components, such as a heating element, to or within the absorptive matrix without a requirement for additional mechanical support to preserve the integrity of the absorptive matrix surfaces and/or structure. In some embodiments, the pallet is friable; for example, comprising granules, fibers, or another fine structure compressed to form the pallet.

In some embodiments, the heating element is an electrically resistive heating element. Optionally the electrically resistive heating element consists of or comprises a metal, for example nichrome, FeCrAl, cupronickel, titanium, and/or stainless steel. Optionally, the heating element is packaged in thermal contact with the heat-vaporizing drug substance. Thermal contact comprises, for example, being in direct contact, or in contact across a heat-transmitting layer allowing a high rate of thermal transfer (for example, comprised of a high heat conductance material such as copper, aluminum, brass or steel; and/or having a thin-walled construction of less than about 10 μm, 20 μm, 25 μm, 50 μm, or another greater, lesser or intermediate thickness). In some embodiments, thermal contact comprises sufficiently close apposition of pallet and heating element that the pallet subtends substantially the whole thermal radiating angle of the portion of the heating element overlying it; for example, more than 90%, 95%, 99%, or another greater, lesser or intermediate value. In some embodiments, the peak current applied to the electrode is in the range of about 1–10 Amperes; for example, about 1 Amperes, 2 Amperes, 4 Amperes, 6 Amperes, or another higher, lower, or intermediate current.

In some embodiments, the thermal contact comprises the heating element extending across and in contact with one or more surfaces of the pallet, for example, one side, or two opposite, largest surface-area sides of the pallet. In some embodiments, the thermal contact comprises the heating element being at least partially embedded within the pallet.

In some embodiments, the heating element is permeable to the passage of air. In some embodiments, the pallet is permeable to the passage of air. Permeability is under conditions, for example, of the passage of air at ambient temperature through a heated assembly of pallet and heating element under a suction pressure such as a suction pressure generated by inhaling, and/or a positive pressure generated from a side away from the inhaling side of the cartridge. In some embodiments, the applied pressure is in the range of 5–20 mmHg, 10–25 mmHg, 5–30 mmHg, 25–40 mmHg, 30–50 mmHg, or another range having the same, higher, lower, and/or intermediate bounds. According to some embodiments, the pallet has an air-permeable structure that allows a flow of at least 0.5 liters of gas per minute or even at least 1 liter of gas per minute under a pulling vacuum of at least 1–5 kPa (-1-(-5)kPa). In some embodiments, the pallet has this permeability in its packaged form. In some embodiments, this permeability is reached during heating of the pallet, for example, due to volatilization, drying, melting, and/or burning of the pallet constituents.

In some embodiments, the heating element comprises a bend of about 180°, such that the element is formed into a clip- and/or U-shape that encloses the pallet on at least two sides. Optionally, the heating element on the cartridge is positioned so that there is no self-contact between the two sides of the U-shape. Optionally, application of current to the heating element by a dose heating assembly is to or near the two ends (comprising contact-receiving regions) of the U-shape, such that heating may occur on two sides of the pallet at once. In some embodiments, application of current to the heating element is by connection to a contact-receiving region on either side of the pallet on one or both sides of the cartridge. The heating element is optionally divided into two or more parts, each receiving current independently. Alternatively, the heating element is provided as a single piece (optionally, a piece which entirely encloses the pallet); electrodes being applicable to contact-receiving regions of the element such that a voltage potential is generated over the extent of the heating element in thermal contact with the pallet.

An aspect of some embodiments relates to the providing of a support member along with the pallet and heating element.

In some embodiments, the support member comprises a frame, or a portion of a frame. Optionally, the frame comprises an aperture for receiving material of the pallet (a "dose chamber"). In some embodiments, the surface area over the width and length of the dose chamber is in the range of about 20–100 mm^2; for example, about 25 mm^2, 50 mm^2, 66 mm^2, 80 mm^2, 100 mm^2, or another greater, smaller, or intermediate surface area. In some embodiments, the aperture region is open on one side. Optionally, the open side of the aperture region is closed by the application of a U-shaped heating element.

In some embodiments, the frame aperture dimensions are, for example, about 6x10 mm, the frame defining a volume of, for example, about 0.5 mm or about 1 mm thick. In some embodiments, the ratio of a thickness of the pallet to a long or short side of the flat face of a pallet is about, for example, 1:5, 1:10, 1:12, 1:20, or another larger, smaller, or intermediate ratio. Optionally, the aperture area is in the range of about 20–100 mm^2; for example 20 mm^2, 40 mm^2, 50 mm^2, 60 mm^2, 80 mm^2, or another greater, lesser, or intermediate face area. The aperture is optionally shaped substantially as a square (for example, about 8x8 mm); optionally the aperture is oblong (for example, rectangular) with a side ratio of, for example, 1:2, 1:3, 1:4, 1:10, or another larger, smaller, or intermediate ration of side lengths. Optionally, the aperture is, for example, about 30x2 mm in dimension.

In some embodiments, the support member comprises a connection between structures which extend across one or both of the flattened faces of the pallet. For example, the support member is positioned at least partially around or alongside the pallet, and one or more other structures extends from an attachment to the support member across a flattened face of the pallet. Optionally, the support member extends at least partially within the body of the pallet itself. Optionally, the support member is attached on at least one side to an electrically resistive heating element, and/or a barrier permeable to airflow but configured to retain fragments of the pallet. In some embodiments, a support member provides a potential advantage for the containment of an optionally fragile pallet, by linking further supporting and/or enclosing structures to one another so that a space for containing the material of the pallet is defined without

depending on the mechanical integrity of the pallet itself to hold together. In some embodiments, the support member extends along 1, 2, 3, or 4 sides of the pallet. Optionally, extending along four sides comprises an enclosing frame, while extent along fewer sides comprises a partially open frame which is optionally closed by another element of the chamber. Optionally, a support member extending along one side comprises an anchor through which elements of the cartridge are coupled to one another. In some embodiments, the support member avoids blocking exposure of the pallet to airflow by covering less than 20% of any of the flattened faces of the pallet. In some embodiments, the blocked exposure is less than 30%, less than 10%, less than 5%, or another greater, smaller, or intermediate amount.

In some embodiments, the support member and/or aperture performs one or more of the following functions:

- positions the pallet at a reproducible position relative to the overall dimensions of the cartridge;
- provides mechanical stability to the pallet (for example, support at one or more edges, rigidity to resist bending, and/or anchoring);
- provides attachment elements (*e.g.* latching/anchoring elements and/or surfaces) enabling the transport of the cartridge by mechanical elements shaped to interact with the cartridge;
- provides insulation between two parallel sides of the heating element to prevent self-contact; and/or
- provides surface region and/or bulk volume region for adherence/anchoring/embedding of the heating element with the cartridge.

In some embodiments, general functions of the frame and/or aperture include shaping of the dose structure during manufacture, and/or assistance in manipulation of the dose for administration.

In some embodiments, the material forming the pallet is friable. In some embodiments, for example, the pallet is formed from small adhering particles such a granulated botanical substance. While this is a potential advantage, for example, for increased porosity and/or to maintain microstructure of the original botanical substance (thus potentially helping to preserve drug substances from deterioration), the resulting structure is potentially fragile. In some embodiments, the maintained microstructure

includes one or more of: cell walls, vacuole membranes, plastid membranes, trichome hairs and/or heads, or another plant microstructure, and in particular, a plant microstructure which encapsulates one or more drug substances. In some embodiments, at least 50% of a target microstructure (microstructure encapsulating a drug substance) is preserved during granulation. In some embodiments, the proportion of preserved target microstructure is at least 60%, 70%, 80%, 90%, 95%, 99%, or another larger, smaller, or intermediate proportion. In some embodiments, the pallet material is supported on one or both faces by a porous support structure, for example a mesh, perforated membrane, or another structure. The support structure is optionally porous enough to permit the passage of air, while still preventing the loss of particles from the friable pallet. In some embodiments, the pallet face support structure comprises a heating element. In some embodiments, the pallet face support structure comprises a polymer membrane, a fabric (for example, a woven mesh), or another flat, air-permeable support structure which covers the friable face of the pallet. In some embodiments, the pallet face support structure is positioned between the pallet and the heating element. Optionally, the heating element is positioned between the pallet and the pallet face support structure.

In some embodiments, the frame comprises a polymer or ceramic which is substantially heat resistant (for example, non-burning, non-melting, dimensionally stable) at the temperature of volatilization. In some embodiments, the polymer comprises, for example, a liquid crystal polymer (LCP), polyether ether ketone (PEEK), Ultem, Teflon, Torlon, Amodel, Ryton, Forton, Xydear, Radel, Udel, polypropylene, Propylux, polysulfone, polyether sulfone, acrylic, ABS, nylon, PLA, polybenzimadazole, polycarbonate, polyetherimide, polyethylene, polyphenylene oxide, polyphenylene sulfide, polystyrene, polyvinyl chloride, one or more other thermoplastics, and/or another polymer material.

In some embodiments, a latching/anchoring element comprises an attachment element (*e.g.* transport arm interlock region), shaped for attachment to the transport arm of a dose puller or other dose transport mechanism.

In some embodiments, the granulated portion of the pallet is closed within the assembled cartridge by the heating element extending across the aperture to form a barrier against the pallet granules falling from the cartridge. In some embodiments, the

heating element extends across the aperture without itself closing the aperture (for example, a ribbon heating element is provided having gaps between windings of the ribbon). In some embodiments another element is provided which acts as a containment barrier (or wall). Optionally, the containment barrier is positioned over the heating element and pallet together, and/or between the heating element and the pallet.

An aspect of some embodiments relates to a method of manufacturing a drug dose load in the form of a pallet for assembly with an inhaler dose cartridge.

In some embodiments, a measured amount of a powdered or granulated material containing a drug substance (comprising, for example, a granulated botanical substance), is placed in a dose chamber. In some embodiments, the measured amount is in the range, for example, of about 10–100 mg. In some embodiments, the dose chamber is sized such that the extent of the dose pallet, upon formation, is limited by bounds of the dose chamber, for example, bounds of pallet width and length.

In some embodiments, the measured amount of granulated substance is leveled by vibration of the dose chamber. Optionally, the vibrating is with an amplitude in the range of about 0.1–1.2 mm; for example 0.5 mm. The frequency of vibration is, for example, in the range of about 20–300 Hz (such as 30 Hz, 45 Hz, 60 Hz, 75 Hz, or another higher, lower, or intermediate frequency). Duration of shaking is, for example, chosen from within the range of 100–1100 msec (such as about 300 msec, 400 msec, 500 msec, 800 msec, or another longer, shorter, or intermediate time). Optionally, the chamber is secured before vibration, to prevent granulate from escaping the chamber from underneath.

In some embodiments, leveling the measured amount of granulate substance comprises using a rigid member (for example a blade) to wipe across a top surface of the dose cartridge. Optionally, the granulate substance is pulled into the dose chamber by applying vacuum before using the rigid member (for example a blade) to level it in position.

In some embodiments, the pallet is formed from the leveled granulate by compression by a pressing element. Compression is to a thickness which is, for example, in the range of 10–50% of the pre-compression thickness of the distributed granulate mass. Compression is, for example, to about 15%, 20%, 30%, 40%, or another larger, smaller, or intermediate value of the uncompressed thickness of the distributed

granulate mass. In some embodiments, the granulate is compressed to a pallet of thickness within a range of between about 200–1500 μm, or thickness within another range having the same, larger, smaller and/or intermediate bounds.

Additionally or alternatively, pallet formation comprises placing a dose cartridge frame above a leveled granulate layer and using vacuum to pull up granulate material that is positioned immediately below the dose.

In some embodiments two or more leveling and/or pallet formation options are utilized for a single dose cartridge.

An aspect of some embodiments relates to positioning of a cartridge carrying a heat-vaporizing drug substance with integrated heating element within a clamping chamber which activates the heating element while confining the volatile components of the vaporizing drug substance to a substance delivery channel.

In some embodiments, the positioning is effected by movement of the cartridge along a track (for example, by a cartridge transport mechanism). In some embodiments, the chamber comprises at least one structure which encloses the cartridge on either side to seal it within a defined lumen, and/or makes electrical contact with a heating element of the cartridge. Optionally, electrical contact is on either side of the cartridge. Optionally, electrical contact is made on sides of the cartridge at points defined by the positioning of the cartridge relative to electrodes of an inhaler device. Optionally, contact pads extend from the heating element for the making of electrical contact therewith. Optionally the electrodes and dose cartridge are positioned such that the electrodes and the contacts on the cartridge are outside the sealed lumen while all vaporized material is confined to the inside of the lumen.

An aspect of some embodiments relates to a cartridge container for use with a substance vaporizer which is alternately:

- attached to the cartridge container for receipt of a dose cartridge into the substance vaporizer; and
- detached from the cartridge container (magazine) for dose administration.

In some embodiments, the detachable drug substance vaporizer is used as part of an interlock mechanism for control of the dispensing of dose cartridges. For example, in some embodiments, the drug substance vaporizer is used as part of the activation of an

interlock which prevents extraction of a new dose cartridge until a previously extracted cartridge is returned to a dispensing container.

Herein, the term "dose cartridge" refers to an assembly intended for a limited number of uses (usually one use, or uses confined within a brief session of inhalations), and comprising a material (for example, a botanical substance) carrying at least one drug substance, and optionally including additional elements for the transport, mechanical stabilization, and/or volatilization or vaporization (by heating, for example) of the drug substance. In some embodiments, a dose cartridge comprises drug substance material for deliver over no more than, for example, 1, 2, 3, or 4 inhalations. Material (optionally, a botanical substance) comprising a drug substance (and/or having a drug substance added thereto) and arranged within a dose cartridge is referred to herein as a "drug dose", "drug dose load" or "pallet"; "pallet" is used in particular to indicate a drug dose is arranged within or as the dose cartridge in flattened form, so as to be suitable for allowing air to be drawn through it for extraction of the drug substance. A pallet comprises, for example, a flattened expanse of porous material thin enough to permit airflow through and between the two largest faces. Herein, the term "drug substance" denotes one or more heat-vaporizing drug substances contained in and/or associated with a pallet for inhalation therefrom by a user.

Before explaining at least one embodiment of the invention in detail, it is to be understood that the invention is not necessarily limited in its application to the details of construction and the arrangement of the components and/or methods set forth in the following description and/or illustrated in the drawings. The invention is capable of other embodiments or of being practiced or carried out in various ways.

Dose Cartridge with Integrated Heating Element

Reference is now made to *Figures 5A–5B*, which are schematic views of a dose cartridge **2300**, disassembled (*Figure 5A*) and assembled (*Figure 5B*), according to some embodiments. Reference is also made to *Figures 5C–5M*, which schematically illustrate alternative constructions of dose cartridges **2350**, **2360**, **2370**, **2380**, **2390**, and **2395**, according to some embodiments. *Figures 5C*, *5E*, *5G*, *5J*, and *5L* show disassembled dose cartridges. *Figures 5D*, *5F*, *5H*, *5K*, and *5M* show assembled dose cartridges.

In some embodiments, drug doses comprising a drug substance are assembled upon and/or within a dose cartridge **2300**. Optionally, the cartridge **2300** comprises:

- a drug dose load **2304**, optionally formed (for example, by flattening) for rapid vaporization;
- mechanical support for the drug dose load **2304** (for example, support by enclosure within a housing **2301,** which is optionally frame shaped);
- an attachment element for facilitating transport of the cartridge **2300** (for example, latch mandibles **2302**); and/or
- means for vaporizing the drug dose load **2304** (for example, an electrically resistive heating element **2306**, optionally a mesh).

Different embodiment examples of the above-listed elements are described herein, as well as examples of embodiments of assembled dose cartridges which lack at least one of these elements. It is to be understood that the different element embodiments are optionally combined in embodiments of assembled dose cartridges in other combinations as well (for example, any heating element design provided with any frame design).

Optionally, the dose cartridge is disposable. Potential advantages of a disposable cartridge include: containment of drug dose and/or drug substance residue for disposal; close integration of dosage support and transport for reliable dosage transport within a vaporizer device; and/or reduced need to maintain and/or monitor portions of the vaporizer device (such as a vaporizing heating element) which are subject to conditions that could degrade performance over time.

Optionally, the dose cartridge is for use in a single inhalation. Potential advantages of a single-use cartridge include improving the precision and/or reliability in controlling the amount of drug substance vaporized under inhaler settings, as some relating to contamination and use damage are reduced.

In some embodiments, dose cartridge **2300** comprises a housing **2301** having a drug dose receiving chamber **2303**. Optionally, the housing **2301** comprises a flattened and elongated strip; while the chamber **2303** comprises an aperture framed or partially frame by the strip. During preparation of the dose cartridge **2300** for dosing, a drug dose load **2304** is inserted into receiving chamber **2303**. Optionally, the drug dose is formed - before or during insertion - such that it conforms to the flattened shape of the substance

receiving chamber **2303**. It is a potential advantage for the drug dose to be held in a flattened format (a "pallet", herein), since a greater surface area and/or a more uniform thickness potentially allow faster and/or more evenly distributed heating and/or airflow during dosage vaporization and delivery.

In some embodiments, the drug dose load or pallet dimensions are, for example, about 6x10 mm across the exposed surface area, and about 1 mm thick. Optionally, the thickness of the drug dose load is in the range of about 0.2–1.0 mm, or a greater, lesser, or intermediate thickness. Optionally, the face area of the drug dose load is in the range of about 20–100 mm^2; for example 20 mm^2, 40 mm^2, 50 mm^2, 60 mm^2, 80 mm^2, or another greater, lesser, or intermediate face area. The substance load is optionally formed into a square or substantially square pallet (for example, about 8x8x1 mm); optionally the pallet is oblong with a side ratio of, for example, 1:2, 1:3, 1:4, 1:10, or another larger, smaller, or intermediate ration of side lengths. Optionally, the pallet is, for example, about 30x2x1 mm in dimension. Corresponding dosing load by weight is about 15 mg in some embodiments. In some embodiments, the dosing load is selected from within a range of about 10–100 mg, or another range having the same, larger, smaller, and/or intermediate bounds.

It is a potential advantage to at least partially surround the drug dose load **2304** with a framing housing **2301** for greater mechanical stability. For example, botanical substances used to form a drug dose potentially comprise friable material, such that a drug dose load **2304** is liable to shed particles, particularly if bent and/or agitated. Enclosure within a cartridge frame allow the drug dose load **2304** to be moved within the system without applying stresses directly to the drug dose load **2304** itself and/or optionally renders it less sensitive to agitation. In some embodiments, the overall length and width of the cartridge is about 20x10 mm, or another larger, smaller, or intermediate size. During manufacture, a framing housing is a potential advantage for formation of a pallet of the correct size for fitted occlusion of a conduit through which air flows to pick up volatiles released during heating of the pallet.

It is to be understood that completely surrounding the pallet is not required, in some embodiments, to achieve sufficient mechanical stability. For example, in some embodiments (*Figures 5E–5F*), a drug dose load **2304** is placed in an open-sided chamber **2363** defined by a "U" shaped frame portion **2361**. Potentially, this allows

packing the material of drug dose load **2304** into the cartridge **2360** from the open side of frame portion **2361**. Potentially, the "U" shaped frame simplifies and/or speeds molding and/or release of the frame itself during manufacture. In some embodiments, the open side is closed off, for example, by a structure such as resistive heating element **2306**, a permeable overlay **2375** (optionally a retaining mesh; *Figure 5G*), or another structure.

In some embodiments, other support of a pallet is provided. A completely frameless example is shown, for example, in cartridge **2390A** of *Figure 5L*, where the whole extent of frame **2391A** (optionally including even latch mandible **2392**) is provided by the pallet material. In some embodiments, pallet material is sufficiently stable when prepared that no or relatively little additional mechanical support is required for use (for example, the pallet is compressed so that it remains intact during transport between a magazine and a clamping chamber). Optionally, at least a portion of the pallet material is mixed with a binder to add stability. Optionally, the pallet is a one piece pallet having sufficient stability, and which serves to hold a gel, fluid or powder comprising the heat-vaporizing drug substance.

In some embodiments, a one-piece pallet/frame is formed, optionally with a plurality of pallet materials, for example, a frame material for the region of frame **2391A** (which may or may not comprise active substance), and a material containing drug substance for release in pallet region **2394A**. Additionally or alternatively, the conditions of formation (for example, degree of compression packing) are different between the framing portion of the pallet, and the drug substance releasing portion of the pallet. In some embodiments, the drug substance releasing material covers, for example, about 60 mm^2 near the center of the pallet **2393**. A drug substance releasing material is a drug substance-containing material, which releases that material, for example, in response to heating by a heating element **2306** located within and/or alongside it. In some embodiments, a heating element **2306** also provides mechanical support. Optionally, the pallet/frame assembly **2393** in turn provides electrical insulation between parts of the heating element **2306**. Attachment between heating element **2306** and pallet **2393** is, for example, by using any method known in the art that would remain stable during use, including, for example, one or more of welding, glue, cold press, hot press and/or pins.

In some embodiments (for example, cartridge **2395** of *Figure 5M*), a pallet **2399** is provided with perforations **2398** which increase its permeability to flow. This is of particular potential benefit for frameless or nearly frameless cartridge embodiments. Pallet **2399** of dose cartridge **2395**, for example, is bounded only by latch mandible **2396** (which is optionally formed as an integral part of the pallet) and (transparently drawn) "U" shaped heating element **2306**. Potentially, packing pallet material with sufficient density to achieve mechanical self-stability reduces the airflow permeability of the resulting pallet, thus interfering with drug volatilization. Perforations **2398** are provided, for example, by introducing gaps with the tooling (a mold, for example) used in packing the bioactive material, by perforating the pallet after formation, or by another method.

In some embodiments, (cartridge **2390** of *Figures 5J–5K*), the mandibles **2391** are provided as a separate part (for example, manufactured of polymer or metal), attached to a pallet **2394** of material (for example, one or more botanical substances) comprising the drug substance to be released. In some embodiments, a heating element **2306** or another wrapping structure provides additional mechanical support. Optionally, attachment of pallet **2394** to mandibles **2391** comprises use of an adhesive. Optionally, attachment comprises mechanical interconnection; for example, one of the mandibles **2391** and pallet **2394** is formed with a tab, and the other with a slot, and/or the mandibles **2391** are provided with protrusions (for example, a comb of spikes) around which the pallet **2394** is formed.

In some embodiments (*e.g.* the cross section of dose cartridge **2380** shown in *Figure 5I*), a heating element **2386** which wraps a pallet **2304** is welded at a join **2381** where two sides of the heating element come together. Potentially, this provides an advantage for providing additional mechanical stability to a pallet **2304** (and particularly, for one of the frameless or partially frameless embodiments). Since the weld **2381** changes the electrically conductive topology of the heating element **2386**, electrodes **2331** are optionally placed at in electrical contact with the heating element **2386** on its opposite ends (optionally, but not necessarily, in contact with the weld region **2381** itself).

In some embodiments, vaporization of a portion (for example, a volatile portion) of the drug dose comprises heating by an electrically resistive heating element (mesh, or

other form of resistive heating element) **2306**. The resistive heating element optionally comprises a material which displays substantial electrically resistive heating; for example, nichrome (typical resistivity of about 1–1.5 μΩ·m), FeCrAl (typical resistivity of about 1.45 μΩ·m), stainless steel (typical resistivity of about 10–100 μΩ·m), tungsten (typical resistivity of about 52.8 nΩ·m), and/or cupronickel (typical resistivity of about 19–50 μΩ·m). According to the choice of metal, parameters such as heating element length and width, metal thickness, aperture size and/or aperture pattern are adjusted to comprise a total resistance across the resistive heating element which is, for example, in the range from about 0.05–1 Ω, 0.5–2 Ω, 0.1–3 Ω, 2–4 Ω, or within another range having the same, higher, lower, and/or intermediate bounds.

Optionally, during assembly, the resistive heating element **2306** is attached to the housing **2301**, in a position overlying the drug dose load **2304** on one or more sides. For example, the resistive heating element **2306** extends from a dorsal surface **2309A** to fold around housing end **2311**, and extend back along ventral surface **2309B**. Optionally, resistive heating element **2306** extends around chamber **2303** such that a drug dose load **2304** contained within chamber **2303** is enclosed by the heating element **2306**. In some embodiments, the resistive heating element **2306** comprises a plurality of separate panels, for example, panels **2356** and **2356A** of *Figures 5C–5D*, one on each side of the cartridge **2350**. Optionally, the panels are electrically connected, one to the other. Alternatively, each receives separate electrical connections. A potential advantage of two-sided enclosure of the drug dose load **2304** (used in some embodiments) is increased speed and/or uniformity of volatilization upon application of a current to the heating element **2306**. In some embodiments, only one panel **2356** of the enclosure is an electrically resistive element, and the other panel **2356A** is optionally a mesh or other air-permeable structure (for example, a porous structure) which provides mechanical support.

In some embodiments, electrically resistive heating elements **2356**, **2356A** are operated simultaneously. In some embodiments, the resistive heating elements are operated separately. This is a potential advantage, for example, to allow separate control and/or release of two different substances, and/or of a single substance in two sequential dosing sequences. For example, a first heating element (panel, for example) is operated with sufficient energy to vaporize drug substance directly underneath it, but for a

sufficiently short time or in such a heating pattern that the heat does not reach all the way through the pallet. At some offset in time (optionally overlapping or entirely separate from the first heating), a second heating element is operated. Potentially, this is an advantage when two substances having different volatilization properties as a function of time or temperature are to be released (for example, from two different pallet materials). Optionally, the two heating profiles are adjusted to result in simultaneous vaporization. Additionally or alternatively, vaporization of two substances is deliberately offset in time. For example, material comprising a flavoring or masking agent is placed in the pallet near a heating element where it is vaporized first, and a second material vaporized shortly thereafter (or the reverse). This is a potential advantage, for example, to mask potentially unpleasant tastes, to signal a user as to a status of vaporization in process, and/or to otherwise modify the sensory experience of inhalation. Optionally, each electrode heats across a whole side of the pallet. Alternatively, each heating element is formed so that vaporization heating occurs only across a portion of the pallet, optionally in a different portion for each electrode. In some embodiments, one heating element is used to "prewarm" a substance to a threshold below active substance release, and a second heating element is activated to achieve release itself. Potentially, prewarming followed by release heating shortens a period of substance release and/or increases a concentration upon release. Potentially, this helps to increase the amount of substance reaching the lungs, and/or to target release to a narrower selected respiratory depth.

In some embodiments, at least one heating element **2306** is embedded wholly or partially within a drug dose load (pallet) **2304** (also shown, for example, in *Figures 5G–5H*). Optionally, a heating element **2306** is embedded partially or wholly within the frame of a housing **2301**. For example, the housing **2301** is originally molded with the heating element in place, and/or the heating element **2306** is pressed into place under high temperature at another stage of manufacturing. Optionally a plurality of heating elements **2306** are embedded wholly or partially within a drug dose load (pallet) **2304**, with electrical contacts optionally arranged to allow separate or simultaneous operation.

In some embodiments, resistive heating element **2306** and/or permeable overlay **2375** comprises a ratio of open (aperture) to closed (mesh or other material) surface area of between about 1:1 (50%) and 1:3 (33%). In some embodiments, the ratio is in the

range of about 10%-20%, about 20%-40%, about 30%-50%, about 40%-70%, about 60%-80%, about 70%-90%, or another range of ratios having the same, larger, smaller, and/or intermediate bounds. In some embodiments, the apertures of the mesh are in the range of about 25 μm, 32 μm, 50 μm, 75 μm, 100 μm, 200 μm, 300–750 μm, 700–1200 μm, or another larger, smaller, or intermediate range. Optionally, at least two apertures have different size and/or shape.

Figures 5G–5H show another embodiment of a cartridge **2370** comprising an embedded heating element **2376** in a frame **2371**. In some embodiments, heating element **2376** comprises a heating section **2378** arranged between a plurality of electrode pads **2377**. In the assembled dose cartridge, heating section **2378** extends across or within chamber **2303** and across or through a pallet **2304**. For example, pallet **2304** is optionally formed by pressing loose material into place around the heating element **2376**, embedding it. Optionally, frame **2371** comprises one or more recesses **2377A**, which receive electrode pads **2377**. In some embodiments, additional mechanical support for the pallet is provided by a permeable overlay **2375**, extending over at least one side of the cartridge frame **2371**. Overlay **2375** optionally comprises a polymer mesh or other structure allowing gas flow.

In some embodiments, the heating section **2378** of heating element **2376** is formed as a wire which crosses chamber **2303** one or more times in connecting to electrode pads **2377**. In some embodiments, heating section **2378** comprises a mesh, ribbon, or other shape. In some embodiments, heating section **2378** is divided into a plurality of separate parts (branches, layers, or other divisions). In some embodiments, the heating section **2378** extends nearby (for example, within 1 mm, within 2 mm, or within another larger or smaller distance) substantially all parts of the pallet containing the drug substance to be released. This is a potential advantage for obtaining more rapid and/or uniform substance release upon heating.

It is to be understood that although electrode contacts **2377** are electrically separated from one another except as joined by the heating section **2378**, they need not be placed physically distant from one another, depending, for example, on the course(s) run by the heating section **2378** itself. Optionally, the electrode contacts are placed on the same or on different sides of chamber **2303**, for example.

In some embodiments, resistive heating element **2306** comprises an etched resistive foil (for example a foil etched into a continuous ribbon or other shape, and backed by a polymer such as polyimide and/or silicone rubber). Optionally a backed resistive foil is perforated through the backing to allow airflow during volatilization of the drug dose. In some embodiments, a fuse is added to the resistive foil, for example as an added component, and/or as a region of ribbon manufactured deliberately thin, so as to provide a method of destroying the heating element after use (by sending an appropriately high current through the heating element for a sufficient period of time).

In some embodiments, resistive heating element **2306** is secured to the cartridge housing **2301** by pressing the heating element onto the housing (for example, at housing region **2308**) using a temperature high enough for the housing to melt and/or soften such that the heating element becomes embedded in the material of the housing. This is particularly appropriate, for example, for use with a housing comprising a thermoplastic. Alternatively (for example, if the housing comprises a thermoset polymer), cold press joining is used. Additionally or alternatively, the heating element is secured by ultrasonic welding, crimping, gluing, or another method of joining.

In some embodiments, the housing comprises an inert, thermally resistant material. In some embodiments, the housing material used comprises, for example, a liquid crystal polymer (LCP), polyether ether ketone (PEEK), Ultem, Teflon, Torlon, Amodel, Ryton, Forton, Xydear, Radel, Udel, polypropylene, Propylux, polysulfone, polyether sulfone, acrylic, ABS, nylon, PLA, polybenzimadazole, polycarbonate, polyetherimide, polyethylene, polyphenylene oxide, polyphenylene sulfide, polystyrene, polyvinyl chloride, another thermoplastic, and/or another polymer material. In some embodiments, the housing comprises a non-conductive and/or semiconductive material. In some embodiment, the housing comprises a conductive material (for example, aluminum), optionally insulated electrically from the resistive heating element, for example by an insulating layer such as an anodized coating.

A potential advantage of LCP and/or PEEK is good resistance to temperature higher than a temperature needed to vaporize a substance held in the cartridge. In some embodiments, bonding of heating element and housing occurs at a temperature of about 280°C (or another temperature high enough to melt and/or soften LCP or PEEK). LCP

and PEEK provide the potential advantage of good thermal stability at lower temperatures, for example, at a vaporization temperature of about 230°C.

In some embodiments, a conductive or semi-conductive housing material is used, optionally provided with a non-conductive separator. For example, the housing material comprises anodized aluminum.

A potential advantage of providing a heating element such as an electrically resistive heating element **2306** for each individual dose cartridge is to provide uniformity of performance between uses. Potentially, a portion of the heated compounds with which a heating element comes into contact remain stuck to the heating element after cool down. This buildup has the potential to affect vaporization performance. Remote heating (by radiation and/or indirect conductance, for example) potentially produces a system having relatively high thermal inertia (needing greater heating power) compared to direct conductive heating by a contact electrode; the problem of contact electrode contamination is removed by designing it for single use. A lowered requirement for heating potentially increases safety and/or device longevity. Potentially, a lowered requirement for heating also lowers demands on power delivery, allowing embodiments with increased portability, greater charge life, and/or lowered expense (for example, for systems having battery-powered heating elements).

In some embodiments, a cartridge **2300** comprises a locking member for use in cartridge transport. The locking member comprises, for example, a latch mandible **2302**. The locking allows engagement by one or more matching members of a vaporizer device transport mechanism, for securing and/or movement of the cartridge. Cartridge movement and/or securing against unwanted movement may occur during the cartridge life cycle, for example: when the cartridge is placed into a queue of cartridges comprising a plurality of cartridges arranged for use, when the cartridge is advanced in the queue, when a cartridge is selected for use, when a cartridge is moved into position for use, when a cartridge is actually used, and/or when a cartridge is discarded, or, alternatively, moved to a “used” position in the cartridge queue.

In some embodiments, a dose cartridge **2300** comprises a button cartridge, wherein the drug dose is substantially encapsulated by a porous, flattened capsule which optionally comprises the material of the heating element surrounding or nearly surrounding the drug dose. The porous capsule is, for example, round, square,

rectangular, oval, or another shape. Optionally, transport of a button cartridge comprises, for example, pressing, pulling, and/or clamping the surfaces of the capsule, and/or operation of magnets (where the button cartridge comprises magnetically susceptible material). In some embodiments, at least one portion of a dose cartridge **2300** (a button cartridge, or any other dose cartridge) is sufficiently thick alongside one or more edges of the drug dose pallet itself to avoid or reduce wastage and/or uneven drug substance release from the volume of the pallet. For example, a side support member of the dose cartridge is large enough to allow a stable hold, while substantially the entire drug dose pallet is heated to release drug substance which can freely diffuse into a stream of airflow.

In some embodiments, a dose cartridge **2300** comprises a central support member surrounded by drug dose substance, which bridges between two faces of the drug dose to interconnect a plurality of air-porous pallet face supports. For example, a dose cartridge comprises a spindle or reel frame shape, with the substance of the drug dose pallet packed around the core of the spindle. Optionally, transport and/or holding of the dose cartridge comprises manipulation of the core of the spindle, which is optionally hollow, and the hollow is optionally open on at least one face of the dose cartridge.

Granulation of Botanical Substance

Reference is now made to *Figure 1*, which is a schematic flowchart of a method of preparing a granulated botanical substance for use in dose packaging with an inhaler device, according to some embodiments. Reference is also now made to *Figure 3*, which is a schematic view of a botanical substance grinding apparatus **2200**, according to some embodiments. Reference is also made to *Figure 4*, which is a schematic view of the grinding plate **2220** of a botanical substance grinding head **2204**, according to some embodiments.

In some embodiments, formation of a drug dose load **2304** comprises processing through a granulated intermediate form **2214** of an organic substance (for example, a botanical substance **2212**). Granulation optionally allows control of drug dose load **2304** shape, structure, and/or density. A potential advantage of granulation is to increase the grain surface area exposed to gas (for example, heated gas) passing through a permeable

drug dose load **2304**. Potentially, granulation allows increased homogenization of the drug dose load, for increased reproducibility of dosage amount.

At block **2002**, in some embodiments, the flowchart begins, and a botanical substance for use in formulating a dosage is received. In some embodiments, the botanical substance comprises cannabis, optionally cannabis flowers in particular. In some embodiments, a botanical substance received for use in formulating dosage comprises any whole or portion of a plant, including for example one or more of: *Cannabis sativa*, *Cannabis indica*, *Cannabis ruderalis*, *Acacia* spp., *Amanita muscaria*, Yage, *Atropa belladonna*, *Areca catechu*, *Brugmansia* spp., *Brunfelsia latifolia*, *Desmanthus illinoensis*, *Banisteriopsis caapi*, *Trichocereus* spp., *Theobroma cacao*, *Capsicum* spp., *Cestrum* spp., *Erythroxylum coca*, *Solenostemon scutellarioides*, *Arundo donax*, *Coffea arabica*, *Datura* spp., *Desfontainia* spp., *Diplopterys cabrerana*, *Ephedra sinica*, *Claviceps purpurea*, *Paullinia cupana*, *Argyreia nervosa*, *Hyoscyamus niger*, *Tabernanthe iboga*, *Lagochilus inebriens*, *Justicia pectoralis*, *Sceletium tortuosum*, *Piper methysticum*, *Catha edulis*, *Mitragyna speciosa*, *Leonotis leonurus*, *Nymphaea* spp., *Nelumbo* spp., *Sophora secundiflora*, *Mucuna pruriens*, *Mandragora officinarum*, *Mimosa tenuiflora*, *Ipomoea violacea*, *Psilocybe* spp., *Panaeolus* spp., *Myristica fragrans*, *Turbina corymbosa*, *Passiflora incarnata*, *Lophophora williamsii*, *Phalaris* spp., *Duboisia hopwoodii*, *Papaver somniferum*, *Psychotria viridis*, spp., *Salvia divinorum*, *Combretum quadrangulare*, *Trichocereus pachanoi*, *Heimia salicifolia*, *Stipa robusta*, *Solandra* spp., *Hypericum perforatum*, *Peganum harmala*, *Tabernaemontana* spp., *Camellia sinensis*, *Nicotiana tabacum*, *Nicotiana rustica*, *Virola theidora*, *Voacanga africana*, *Lactuca virosa*, *Artemisia absinthium*, *Ilex paraguariensis*, *Anadenanthera* spp., *Corynanthe yohimbe*, *Calea zacatechichi*, *Coffea* spp. (*Rubiaceae*), *Sapindaceae* spp., *Camellia* spp., *Malvaceae* spp., *Aquifoliaceae* spp., *Hoodia* spp. *Chamomilla recutita*, *Passiflora incarnate*, *Camellia sinensis*, *Mentha piperita*, *Mentha spicata*, *Rubus idaeus*, *Eucalyptus globulus*, *Lavandula officinalis*, *Thymus vulgaris*, *Melissa officinalis*, Tobacco, Aloe Vera, Angelica, Anise, Ayahuasca (*Banisteriopsis caapi*), Barberry, Black Horehound, Blue Lotus, Burdock, Camomille/Chamomile, Caraway, Cat's Claw, Clove, Comfrey, Corn Silk, Couch Grass, Damiana, Damiana, Dandelion, Ephedra, Eucalyptus, Evening Primrose, Fennel, Feverfew, Fringe Tree, Garlic, Ginger, Ginkgo, Ginseng, Goldenrod, Goldenseal, Gotu

Kola, Green Tea, Guarana, Hawthorn, Hops, Horsetail, Hyssop, Kola Nut, Kratom, Lavender, Lemon Balm, Licorice, Lion's Tail (Wild Dagga), Maca Root, Marshmallow, Meadowsweet, Milk Thistle, Motherwort, Passion Flower, Passionflower, Peppermint, Prickly Poppy, Purslane, Raspberry Leaf, Red Poppy, Sage, Saw Palmetto, Sida Cordifolia, Sinicuichi (Mayan Sun Opener), Spearmint, Sweet Flag, Syrian Rue (*Peganum harmala*), Thyme, Turmeric, Valerian, Wild Yam, Wormwood, Yarrow, Yerba Mate, and/or Yohimbe. The dosing botanical substance optionally includes any combination of plant material from this list, and/or other plant material.

Grinding of the botanical substance is described with respect to the use of a grinder **2200**, for purposes of illustration. It is to be understood that in some embodiments, another grinders capable of producing particles of sufficiently small size and uniformity for forming into a drug dose load are used. Optionally, the grinder is capable of producing the particles without significantly damaging the macroscopic plant structure of the botanical substance, for example without bursting and/or breaking the trichomes of a cannabis plant.

At block **2004**, in some embodiments, the botanical substance **2212** is placed in a sieving chamber. The sieving chamber comprises a mesh or other perforated surface **2206**, the perforations being, for example, about 500 μm in pore size. Optionally, the pore size is, for example, about 250–400 μm, 350–600 μm, 500–700 μm, 650–900 μm, 800–1000 μm, or another range of pore sizes having the same, larger, smaller, and/or intermediate bounds.

At blocks **2006**, and **2008** in some embodiments, the sieve is placed in a grinder body **2202**, optionally together with a moisture absorption substance **2208**. Moisture absorption substance **2208** helps to keep control the moisture content of the granules **2214**, for example, to obtain a consistent range of granulated material characteristics including self-adhesion, and relative weight-percent dose concentration. Potentially, the moisture absorption substance **2208** helps to prevent free-frost formation during the cryogenic stages of the grinding process.

At block **2010**, in some embodiments, the grinder **2200** is cooled. Optionally, the cooling is using a cryogenic fluid **2210** to a temperature in the range, for example, of -50°C to -180°. Optionally, the cryogenic fluid **2210** is liquid nitrogen, or another cryogenic fluid appropriate to the target temperature range.

At block **2012**, in some embodiments, a grinding head **2204** is lowered to the level of the botanical substance while spinning, and gradually lowered further as particles are further ground. An example of a grinding head grinding plate **2220** is shown in *Figure 4*, comprising rigid protrusions **2216** (which act to break up the frozen botanical substance when they press against it). Optionally, fine brushes **2218** act to spread particles of ground material over the plate, such that particles which have been ground to a sufficient degree of fineness fall through the sieving pores into a receiving chamber **2213**.

At blocks **2014** and **2016**, in some embodiments, the grinder is brought back to ambient temperature, unsealed, and the sieved granulate removed from the receiving chamber **2213**. The granulate is homogenized, for example, by use of a V-mixer, circular mixer, or other homogenizing process.

Packaging of a Botanical Substance to a Dose Cartridge

Reference is now made to *Figure 2*, which is a schematic flowchart of a method of packaging a botanical substance to a dose cartridge for use with an inhaler device, according to some embodiments.

In some embodiments, material for forming a drug dose (for example, granulated material, as described in relation to *Figure 1*) is incorporated into a dose cartridge **2300** by a process of pressing a metered amount of the material into a receiving chamber **2303** in the cartridge. Optionally, the pressing is to a degree which provides a chosen degree of thinness (thinner packages potentially heat more quickly and/or evenly), and/or a chosen degree of density (a package should not be too dense to allow the passage of airflow during vaporization).

At block **2102**, in some embodiments, a first branch of the flowchart begins for the cartridge packages of botanical granulate. In some embodiments, the humidity and temperature of the packaging area are controlled, for example, to a temperature of 20°C and a humidity of 30%. It should be understood that other environmental conditions are used in some embodiments (for example, the temperature can potentially be within about ±5°C of 20°C; the humidity can be within about ±10% of 30%). The variables of temperature and humidity, as selected, may be set to consistent levels in order to maintain consistent dosing. Also, conditions selected should be such that the botanical granulate neither becomes too dry to pack well, nor too wet to distribute evenly.

A measured amount of botanical granulate is placed in an open receiving chamber **2303** of a dose cartridge housing **2301**. Optionally, one side of receiving chamber **2303** is closed by an electrically resistive heating element **2306** which is optionally a mesh, or another heating element which is perforated to permit the passage of air through the granulate, while retaining the granulate in place. Alternatively, the receiving chamber **2303** is placed against a firm flat surface from which the granulate is easily removed (for example, a relatively low friction polymer surface such as PTFE). Optionally, receiving chamber **2303** comprises a thin, heat-conductive bottom wall which is perforated to permit the passage of air through the granulate, while retaining the granulate in place.

Optionally, receiving chamber **2303** comprises a reticular formation (a net, mesh, or other structure), which serves as an anchor for material during pressing (for example, at block **2106**). In some embodiments, a reticular formation or a permeable retaining element which is optionally not itself a heating element is provided on the exterior of the dose cartridge, serving to provide mechanical support for a pallet in the receiving chamber **2303**, while also permitting the passage of air.

The amount of measured granulate is optionally chosen according to the potency, concentration, and/or volatility of the vaporizing fraction. When cannabis granulate is used, for example, the measured amount is optionally 15 mg, or another value in the range of 10–20 mg. Choice of amount optionally depends, for example, on plant variety, growing conditions, and/or assay results of a botanical substance available for packaging. In some embodiments, the measured amount is within the range, for example, of 1–20 mg, 10–40 mg, 25–75 mg, 50–100 mg, or within another range of amounts having the same, intermediate, larger, or smaller bounds. In some embodiments, for example, if the required dosage is too small to fill the substance receiving chamber, a filler substance is optionally added; for example, a portion of an inert (lacking volatile drug activity) botanical substance. Optionally, the filler is uniformly mixed with the required dosage.

At block **2104**, in some embodiments, the granulate is distributed within the receiving chamber **2303**. In some embodiments, distribution comprises leveling the housing **2301** (placing it horizontally flat), and shaking the housing with the granulate inside vertically (for example, by vibrating the cartridge **2300** and/or the surface that the

cartridge housing **2301** rests on), until a leveled plain of granulated substance is formed within the chamber **2303**. In some embodiments, the vibrating is with an amplitude in the range of about 0.1–1.2 mm; for example 0.5 mm. The frequency of vibration is, for example, in the range of about 20–300 Hz (such as 30 Hz, 45 Hz, 60 Hz, 75 Hz, or another higher, lower, or intermediate frequency). Duration of shaking is, for example, chosen from within the range of 100–1100 msec (such as about 300 msec, 400 msec, 500 msec, 800 msec, or another longer, shorter, or intermediate time). Optionally, the chamber is secured before vibration, to prevent granulate from escaping the chamber from underneath.

At block **2106**, in some embodiments, granulate is compressed by the use of a press. Optionally, the press lowers vertically down upon the distributed granulate, forming it into a small pallet **2304** of compressed granules. Compression is to a thickness which is, for example, in the range of 10–50% of the pre-compression thickness of the distributed granulate mass. Compression is, for example, to about 15%, 20%, 30%, 40%, or another larger, smaller, or intermediate value of the uncompressed thickness of the distributed granulate mass. In some embodiments, the granulate is compressed to a pallet of thickness within a range of between about 200–1500 μm, or thickness within another range having the same, larger, smaller and/or intermediate bounds.

At block **2108**, in some embodiments, the press is removed. In some embodiments, the press is removed by sliding horizontally across the surface of the cartridge housing **2301**. Potentially, this allows granulate residue which may stick to the press tool to be scraped off at the edge of the receiving chamber **2303**. Optionally, granulate which has been compressed into the chamber is fixed thereby, and remains in place during additional handling to finish the cartridge preparation.

Other methods of filling the drug dose receiving chamber are also contemplated as separate embodiments as will be apparent below.

For example, at block **2114**, in some embodiments, an alternative branch of the flowchart begins. As an alternative to the formation by granulate pressing of drug dose load **2304** for a cartridge **2304**, a portion of a botanical substance tape is trimmed to the size of a substance receiving chamber **2303** of a dose cartridge housing **2300**. In some embodiments, the botanical substance tape is formed, for example as described in

International Patent Application Publication No. 2012/085919. At block **2116**, in some embodiments, the trimmed tape portion is inserted to the substance receiving chamber **2303**.

Also for example, at block **2118**, in some embodiments, another alternative branch of the flowchart begins. Optionally, a material containing a drug substance from which a drug dose is formed is available as fluid and/or gelatinous extract, fine suspension, and/or solution. The drug dose receiving chamber then optionally comprises an air-permeable portion (for example, foam, sponge, felt or other fiber matrix, and/or another porous structure) which absorbs the drug substance containing material to fix it into place.

At block **2110**, in some embodiments, any one of the three branches continues. Resistive heating element **2306** (a mesh, for example, or another heating element such as an etched foil) is attached to the cartridge housing **2301**, for example by pressing against the housing and heating until the two parts are fused by softening and/or melting of the housing material. Attachment is optionally on one or both sides of the substance receiving chamber **2303**. In some embodiments, a heating element in a "U" shape wraps around the cartridge housing **2301** to enclose the chamber **2303** on two sides, for example, within the hollow of the "U".

Dose Cartridge Carousel and Vaporizing Device

Reference is now made to *Figures 6A–6E*, which schematically illustrate a carousel-type dose delivery system **2340** for use with an inhaler device, according to some embodiments.

In some embodiments, the dose delivery system **2340** comprises a carousel **2322** holding a plurality of dose cartridges **2300** encased by an enclosure **2324**, and an inhaler device **2321** comprising a dose puller **2314** and a clamping chamber **2320**. Carousel enclosure **2324** and the inhaler device **2321** are attached to one another; the carousel **2322** revolves to present cartridges to the inhaler device **2321** in the order of their positions within the carousel, or in another order, as selected by operation of the carousel **2322**. Optionally, the carousel enclosure **2324** (and its contents) are exchangeable for a new enclosure assembly, for example when dosages are exhausted, and/or to change the dosing composition. The number of dosage cartridges carried by an enclosure is, for example, about 100. Optionally, the number of cartridges is another

number within the range of 10–200 (for example, 10, 40, 80, 120, 180, or 200), or another larger or smaller number. In some embodiments, carousel diameter is, for example, within the range of about 7–10 cm, or another larger or smaller diameter, according, for example, to the number and size of cartridges to be accommodated. Optionally, carousel **2322** comprises identical doses or a plurality of different doses (for example, different amounts, concentrations, and/or substance compositions). It is to be understood that a carousel is not the only form of cartridge storage device (magazine) which is usable with dose cartridges. For example, the dose cartridges can be stored within a linear-type magazine storage system (for example, as described in relation to *Figures 11A–11C*). A potential advantage of a carousel over a linear-type magazine is rotationally selectable access during loading and/or unloading to dosing positions; for example, to effect a dosing regimen (namely, to provide the user with a defined sequence of inhalations from dose cartridges each having a different substance and/or a different amount of a substance and/or different substance ratios) and/or to adjust a dosing regimen after the magazine was already loaded with dose cartridges. In some embodiments, a carousel-type magazine reduces a longest dimension relative to a linear-type magazine, for a similar count of cartridges contained.

In an example of an operation cycle, dose puller **2314** is actuated to extend from the inhaler device into the carousel enclosure **2324**, where it attaches to a dose cartridge **2300**, for example, by means of latch mandibles **2302**. In some embodiments, the dose puller **2314** "snaps" into place within the latch mandibles **2302**. In some embodiments, the dose puller **2314** comprises two parts which move laterally past opposite sides of, and then close together within the space defined by the mandibles **2302** (potentially applying a lower force to the mandibles **2302** and/or cartridge **2300** than a snap-inserting method). A further action draws the actuator back into the inhaler device, and the attached cartridge **2300** along with it. The drug dose load **2304** of the cartridge **2300** is drawn thereby into communication with an air intake **2312**. It is to be understood that a dose puller potentially operates in a mode other than transport by an actuated arm: for example as a dose "pusher" (comprising, for example a spring loaded member in the carousel volume itself), and/or a magnet (in a pulling mode) or magnets (in a pushing or pulling mode).

In some embodiments, clamping members **2310A** and **2310B** close on the cartridge, bringing electrodes into place for heating the drug dose for vaporization of the volatile substances within it.

Reference is now made to *Figures 11A–11C*, which schematically illustrate a linear-type dose cartridge magazine **1100** for use with an inhaler device, according to some embodiments. *Figure 11A* shows an external view, the view of *Figure 11B* shows magazine housing **1110** as partially transparent, and *Figure 11B* shows the magazine **1100** in cross-section.

In some embodiments, a linear-type dose cartridge magazine **1100** comprises a housing **1110** having at least one cartridge access slot **1105**, through which a dose cartridge **2300** is dispensed; for example, by gripping latch mandibles **2302** from a position at, protruding, or within access slot **1105**. Optionally, the dose cartridges **2300** within the housing are transported by a spring, piston, screw, or other mechanism in one or both directions within the housing **1110**. In some embodiments, cartridge transport is driven in whole or part by actions of withdrawing and/or replacing a cartridge. For example, in some embodiments, a cartridge **2300** is withdrawn from a first slot **1105**, causing the next unused cartridge to be advanced into position for selection. In some embodiments, a cartridge **2300** is returned to a second slot (optionally, the same slot **1105**, with an additional mechanism to control advancing), pushing a stack of used cartridges **2300** (*e.g.* a spring-loaded stack) deeper into a used-cartridge receptacle storage area. This provides a potential advantage for simplicity, security, and/or cost. In some embodiments, cartridges are optionally transported within housing **1110** under motorized control (for example, pushed by one or more plates in contact with a motorized lead screw). A potential advantage of motorized control is to allow non-sequential and/or non-predetermined access to dose cartridges - for example, to allow selection of a dose cartridge according to a pre-defined regimen, and/or a dynamically defined dose cartridge regimen.

Reference is now made to *Figures 7A–7B*, which schematically illustrate a clamping chamber **2320** for heating and delivery of vaporized substance from a dose cartridge **2300**, according to some embodiments. Reference is also made to *Figure 7C*, which schematically illustrates a cross section of clamping chamber **2320** clamping a cartridge **2300**, according to some embodiments.

In some embodiments, cartridge **2300** is transported into the clamping chamber **2320**, for example by movement of dose puller **2314** while engaged with latch mandible **2302**.

In some embodiments, clamping chamber **2320** comprises two clamping members **2310A**, **2310B**, which engage cartridge **2300** during dose vaporization. In some embodiments, each clamp **2310A**, **2310B** carries a corresponding electrode **2330A**, **2330B**, which is positioned to come into pressing contact with a resistive heating element **2306** or other heating element which the cartridge **2300** carries. Electrodes **2330A**, **2330B** are in turn in electrical contact with a power supply for supplying electrical current. Heating is delivered, in some embodiments, by switching current through the electrodes **2330A**, **2330B**, via the heating element **2306**. Optionally, the electrodes **2330A**, **2330B** are positioned to contact the resistive heating element **2306** such that current follows pathways through the resistive heating element **2306** which extend over substantially all of at least one side (two sides, in the illustrated example) of the drug dose load, such that heat may be evenly distributed over and conducted to the surface of load **2304**.

In some embodiments, air **2315A** flow passes through intake **2312**, through the heated drug dose load **2304**, during which passage the air **2315A** becomes drug substance laden air **2315B**, and out of the output aperture **2312B**. Optionally, the output aperture **2312B** is in fluid communication with a tube which is routed for delivery of the vaporized substances to a user. Optionally, the clamping members **2310A**, **2310B** comprise portions of the intake **2312** and output **2312B**. Potentially, this allows the clamp members **2310A**, **2310B** to alternately open for receiving a cartridge **2300**, and close to seal an airway passage around the cartridge **2300**, so that vaporized substance is kept confined to a defined passageway. In some embodiments, the clamp members **2310A**, **2310B** comprise air seals **2313**, which close around the cartridge **2300** so as to substantially prevent substance vaporization and/or airflow transfer except along the pathway which conducts air to the user. Optionally, air seals **2313** comprise an elastically deformable material such as a polymer rubber. In some embodiments, electrodes **2330A**, **2330B** are also protected from the airflow by air seals **2313**, optionally including any vaporizing portions of the pallet **2304**. A potential advantage of

closing the electrodes away from vaporized material is to reduces and/or prevent the electrodes from becoming contaminated due to repeated use.

In some embodiments, the electrodes **2330A**, **2330B** are block shaped (for example, as shown in *Figures 7A–7B*), providing a substantially planar contact surface with the heating element. In some embodiments, another electrode contact surface shape is used. In particular, a blade-like contact surface (long and thin, for example, with the thinner dimension being less than 0.5 mm, 0.3 mm, 0.1 mm, or another greater, smaller, or intermediate size), or a curved contact surface (for example, having an at least partially circular, elliptical, or other curved cross-section) is provided. Optionally, using such a shape reduces contact surface area, and concentrates clamping force, resulting in increased clamping pressure. This in turn potentially increases reproducibility of electrical contact and/or reduces electrical resistance (and energy losses) at the region of electrical contact with the cartridge. For example, the inventors have found that, in some embodiments, an electrode/heating element contact force of about 500 N, used with a curved contact surface electrode design (and/or, for example, a pressure of about 70 N/mm^2), reduces electrical contact resistance to substantially zero (for example, less than 1% of total circuit resistance). In some embodiments, power loss due to resistance across the electrical contact is less than, for example, about 1%. In particular, a curved (for example, cylindrical) electrode contact surface provides a potential advantage for reproducible contact by combining a low contact surface with robust mechanical support behind the surface.

After dose delivery, ejection of the cartridge comprises disengagement of dose puller **2314** from latch mandible **2302**; for example, by displacing one of the two parts while restraining the other from following, and/or by deforming one of the two parts. For example, puller **2314** is further retracted, while cartridge **2300** is prevented from following by a restriction in the size of the slot through which it moves. In some embodiments, disengagement is followed by ejection: for example, the cartridge falls out of its slot, is pushed by a returning action of the dose puller **2314**, and/or is otherwise transported out of the device altogether. In some embodiments, the cartridge is returned to carousel **2322** as a used dose (into the same, or another available slot different from the one it was retrieved from). Optionally, this is performed shortly or immediately at the end of use. Alternatively, the cartridge is ejected in the framework of

a next use of the device, in which case the carousel also advances to present the next cartridge to be used.

In some embodiments, access to doses loaded in the carousel is sequentially in the order of their positions within the carousel. In some embodiments, dosage order is pre-determined but variable; for example, dosages of different amounts for administration throughout a period of time are arranged in that order when the carousel is loaded. In some embodiments, carousel movement (advancing) is substantially according to a sequence of actions which are mechanically coupled to the dose pulling and/or dose returning actions. In some embodiments, carousel movement (or dose cartridge selection for another magazine type, such as a linear-type magazine) is under the control of a controller, for example, a microprocessor-controlled stepper motor or other advancing mechanism. Optionally, the controller tracks which dosage is in which cartridge slot, and/or its status. Optionally, the controller automatically and/or upon command selects an appropriate cartridge, and advances it into use position by as many steps as needed to make it available for pulling. Optionally, this selection allows out-of-order access to cartridges in the carousel (or other magazine configuration). Optionally the carousel or other magazine advances as a result of a user actuating the device. In some embodiments, there is more than one use position (for example, there are two or more clamping chambers) and the controller is configured to select a combination of cartridges from the magazine from any specified location within the magazine. In some embodiments, a controller selects a dose according to a progress of a dosing regimen. For example, if a first drug dose is determined to have been only partially administered (for example, due to a detected problem during inhalation), the controller optionally selects a second partial dose, for additional administration. Additionally or alternatively, the strength of a drug dose is selected by a controller based on a time elapsed since a previous dose was administered. This potentially allows repeated dosing by a user, while maintaining control which potentially prevents overdosing.

In some embodiments, a controller is configured to present dose cartridges **2300** from a magazine or other cartridge holder for a plurality of inhalations to be taken sequentially as part of a single dosing, for example in a single session, or a plurality of sessions separate by brief intervals. Optionally, the device advises the user before the use on the number of inhalations to be performed and the user simply takes the number

of inhalations with the device as instructed, while the device automatically selects the cartridges in accordance with a certain regimen. In some embodiments, the user is prompted (for example, by an audible or visible stimulus) as long as there are additional doses remaining in the current inhalation series. Optionally, the controller replaces dose cartridges automatically as they are used. Alternatively, the user is prompted to perform an action for dose cartridge replacement (for example, moving the mouthpiece or pressing a button). Optionally, the device is configured to enforce a minimum interval between inhalations. This is a potential advantage to reduce the likelihood that a user will perform one or more of the later inhalations improperly. For example, a minimal time period of about 2-5 minutes is optionally imposed by the device between each inhalation and/or dose exchange. Additionally or alternatively, a rapid sequence of inhalations (*e.g.* separated by no more than a few seconds) is performed as fast as is convenient to the user (*i.e.* without an imposed minimal interval). This provides the potential advantage of being less time consuming in total. Optionally, one or more minimal interval periods are imposed when a sequence of inhalations is long enough to warrant a mandatory rest of the user and prevent shortness of breath.

Detachable Vaporizing Device

Reference is now made to *Figures 8A–8B*, which schematically illustrate a dosage delivery device for loading from a carousel, and separable from the carousel for delivery of the dose itself, according to some embodiments.

In some embodiments, functions performed by clamping chamber assembly **2320** are performed by separable parts, such that a clamping/heating/administration subassembly is separable from portions of a dose storage pulling and transport subassembly, at least for dose administration to a user. In some embodiments, the clamping/heating/administration assembly **2400** comprises a substantially cylindrical body (for example, cigarette, cigarillo, cigar, and/or pen shaped), which inserts into a receptacle of the dose pulling and transport assembly. The assembly **2400** comprises a slider mechanism **2410** or other structure which is engaged by the transport assembly, and/or is activated by manual or other external operation.

Optionally, slider mechanism **2410** slides out of the intake end **2440** of the assembly **2400** to engage a cartridge **2300** with engaging part **2415**, as described, for example, in relation to dose puller **2314**. Optionally, the cartridge **2300** (formed, for

example, with a long and narrow drug dose load **2404**) is pulled into the clamping/heating assembly. The clamping/heating assembly optionally comprises electrodes **2430** which are loaded with spring members **2407**, or another means, for pressing against resistive heating element **2306** to provide electrical contact thereto. Optionally, power for heating is supplied by a battery **2413** connected to electrodes **2430** via wires **2414**. Optionally, the battery **2413** is rechargeable, for example, the battery **2413** recharges from a supply provided by the main body assembled together with the carousel. Optionally, heating begins upon operation of a control (such as a button), and/or is subject to one or more automatic activation, modulation, and/or interlock controls, such as heating upon sensing of a change in pressure, and/or air shunt opening to control speed and/or amount of dose delivery. During dose delivery, air is drawn through the body **2420** (for example, orally), by applying suction to end **2450**. Air drawn into intake end **2440** is forced by baffles/conduits **2401**, **2408** to pass through the heated drug dose load **2404**, carrying vaporized drug substance to end **2450**.

A potential advantage of the separable design is to reduce the effort required by a user to manage the dosing device at the time of dose administration. Another potential advantage is to separate the functions of dosage selection, management, and control from the dosing itself. There is a potential positive psychological effect due the separation of the dosing act, which approximates that of a normal e-cigarette, from the more clinical aspects of dosage control.

In some embodiments, a removable cartridge comprises a plurality of separately heatable regions; for example, material is loaded into different apertures, and/or an aperture which is crossed by a plurality of separately addressable heating elements. Optionally, the different loads comprise different substances. For example, a cannabis load is optionally followed by one or more tobacco loads, and/or by loads of cannabis that have a different, or even no, THC content.

In some embodiments, analog and/or digital circuit logic is used to control which heating element region receives current. For example, each heating element is optionally deliberately “burned” (by fuse breaking, for example) after use. A suitably arranged sensing circuit detects a first unused dosing region, and selects it for the next activation. A potential advantage of this is to allow a dosage to be spread over multiple inhalations. Another potential advantage is to allow a dosage for one purpose (for

example, a medicinal purpose) to be combined with dosages for another purpose (for example, an alternative medicinal purpose, or to allow additional inhalations for the purpose of enjoyment). Another potential advantage is to allow the use of multiple dose types (for example, different flavors) for the sake of giving variety to the user's experience.

Reference is now made to *Figure 9*, which schematically illustrates an interlock-protected dose dispensing device **2500**, together with a removable dose administration assembly **2400**, according to some embodiments.

In some embodiments, dispensing device **2500** comprises a plurality of receiving apertures **2501**, **2502** for the administration assembly **2400**. In some embodiments, aperture **2501** is an aperture from which an unused dose cartridge **2300C**, **2300A** is retrieved into administration assembly **2400**. In some embodiments, after a dose cartridge **2300A** is extracted from the dispensing device **2500**, the next dose cartridge **2300C** does not advance into position until the conditions enforced by an interlock device are met. In some embodiments, operation of the interlock device comprises inserting administration assembly **2500** into aperture **2502**. Optionally, insertion triggers (for example, by mechanical and/or controller-actuated operation) the movement of the carousel such that a dose cartridge **2300C** is moved into position. In some embodiments, insertion (optionally insertion and removal) of the administration assembly **2400** extracts cartridge **2300A**, which now occupies the former position of used cartridge **2300B**. Potentially, this interlock mechanism helps to ensure that only one dose at a time is removed from the dispensing device **2500**. In some embodiment, advancing of the carousel does not occur unless a cartridge **2300A** is sensed within the administration assembly **2400** upon insertion into aperture **2502**. In some embodiments, cartridge **2300A** is inserted into administration assembly **2400** such that it cannot be removed without destruction of the cartridge **2300A** and/or the administration assembly **2400**.

Plurality of Potentially Simultaneous Doses

Reference is now made to *Figure 10*, which schematically illustrates a carousel arranged for potentially simultaneous administration of substances from a plurality of dose cartridges held within two separate carousel magazines, according to some embodiments.

In some embodiments, a dispensing device **1000** comprises a plurality of magazines, shown here as carousel magazines **1010**, **1020**; each operating, for example, as described in relation to the carousel of *Figures 6A–6E*. In some embodiments, the magazines **1010**, **1020** are stacked, and the cartridge holding chambers **1012**, **1022** are arranged to share a common conduit, or two at least partially parallel conduits for extraction airflow. Magazines **1010**, **1020** are optionally housed in a common housing **1002** (shown transparent to reveal interior details), or provided with separate housings.

In some embodiments, operation of the device comprises removal of a first dose cartridge **2300C** from the first magazine **1010**, and a second dose cartridge **2300D** from the second magazine **1020**. The dose cartridges are positioned one adjacent the other in a shared clamping chamber **1001** (optionally, two separately actuatable clamping chambers are provided). Unladen air **1005** flows via the dose cartridges **2300C**, **2300D**; laden air **1007** exits them bearing at least one drug substance. The applied heating profile (comprising time, temperature, heating rate and/or onset, for example) is optionally identical in the two dose cartridges. Optionally, the applied heating profiles are controlled separately, thus optionally releasing the drug substance(s) at different times, and/or releasing different drug substance compositions and/or amounts).

Optionally, airflow is estimated and controlled for both dose cartridges **2300C**, **2300D** in unison. Optionally, only one dose cartridge comprises a drug substance, and a second, inert cartridge occupies the other dose cartridge position. An inert cartridge is, for example, a cartridge that does not comprise a substance (*e.g.*, comprises an inert pallet). Optionally an inert cartridge has similar airflow properties to those of a dose cartridge it is used with. As an alternative option, the inert cartridge entirely blocks airflow. Optionally, a used cartridge is used as an inert cartridge.

In some embodiments, the inert cartridge is included in a normal position of the magazine. Optionally, the inert cartridge is stored in the device at another accessible location. Optionally the empty position is blocked, for example by a protrusion from a wall.

In some embodiments, an inert cartridge (for example, a blocker cartridge or partition) is present in the dose cartridge magazine positions by default (for example, placed during manufacture of the magazine, before drug loading). When moving a dose cartridge into position during drug loading, the inert cartridge is optionally removed and

replaced by the dose cartridge as part of loading. Where no dose cartridge is loaded, the partition optionally remains. Once a used dose cartridge is discarded, the inert cartridge optionally returns to position, for example by a spring mechanism.

Reference is now made to *Figure 12*, which schematically illustrates a carousel **1210** arranged in an inhaler **1200** for simultaneous administration of substances from a plurality of dose cartridge clamping chambers **1220**, **1230** in a corresponding plurality of extraction airflow conduits **1222**, **1232**, according to some embodiments.

In some embodiments, a plurality of separate extraction airflow conduits **1222**, **1232** are provided, each comprising a dose cartridge clamping chamber **1220**, **1230**. Optionally, dose cartridges **2300C**, **2300D** are drawn from a single carousel magazine **1210** or other cartridge magazine. Alternatively, a plurality of magazines is provided. Cartridge drawing is optionally simultaneous, sequential and/or separately operated altogether, and optionally while the cartridge magazine(s) remain in a single position, or with movement of the magazine **1210** (*e.g.* rotation) between draws.

In some embodiments, flow through the extraction conduits **1222**, **1232** is at least partially regulated by providing a draw conduit **1215** in flow communication with the extraction conduits **1222**, **1232**. The total flow of air **1209** through the device due to inhalation from a mouthpiece **1202** is optionally divided among all conduits (for example by the sizing and/or size adjustment of conduit diameters and/or valves), such that the portion of airflow through each extraction conduit **1222**, **1232** is adjusted to be within a targeted extraction airflow profile. Remaining airflow is optionally directed through the draw conduit **1215**. Optionally, the extraction conduits are operated separately (for example, only one is operated, or both are operated in sequence).

Optionally, sensors **1240** providing data (*e.g.* airflow and/or temperature data indicative of airflow and/or temperature at the dose cartridges during operation) for control are optionally positioned near or via one or more of the dose cartridges **2300C**, **2300D**. Control optionally comprises adjustment of airflow (for example, by adjustment of a valve or aperture position) such that both dose cartridges **2300C**, **2300D** simultaneously experience airflow **1205**, **1207** within a given range. Alternatively, adjustment is such that a part of the airflow sequence is controlled with respect to a first dose cartridge position **1220**, while another part is controlled according to second

position **1230**. Optionally, in some sessions, only one of clamping chambers **1220**, **1230** is used.

In some embodiments, a plurality of draw conduits **1215** is provided, for example, one in separate association with each of the extraction conduits **1222**, **1232**. Optionally, the air flowing in each of the extraction conduits **1222**, **1232** is combined only at the mouthpiece. A potential advantage of this is to allow separate control of airflow through each dose cartridge.

In some embodiments, a third type of conduit (not shown, but described as a "general conduit" in, for example, a co-filed application designated "Flow Regulating Inhaler Device", referenced hereinabove) comprises a valved conduit with a low airflow resistance when valved open. Optionally, a conduit of this third type is opened for admission of ambient air during inhalation, for example to provide an advancing (or "chase") airflow behind airflow laden with a drug substance. This is a potential advantage for moving drug substance laden air past a respiratory dead space, and/or into a deeper portion of the lungs for absorption.

Reference is now made to *Figures 13A–13B*, which schematically illustrate a linear-type cartridge magazine **1302** and dual-dose cartridge transport **1300** in two sequential positions, according to some embodiments. Reference is also made to *Figures 13C–13D*, which schematically illustrate the dual-dose cartridge transport **1300** of *Figures 13A–13B* in two sequential positions, according to some embodiments.

In each of *Figures 13A* and *13C*, two pullers **2314** are shown engaged with two dose cartridges **2300C**, **2300D**, preparatory to pulling the dose cartridges **2300C**, **2300D** into position for substance vaporization. In each of *Figures 13B* and *13D*, the cartridges **2300C**, **2300D** are shown in position for vaporization.

In some embodiments, an inhaler device includes a clamping chamber **1300** configured to clamp two or more dose cartridges **2300C**, **2300D** along an airflow conduit through which air flows to extract one or more drug substances from the dose cartridges **2300C**, **2300D**. Arrows **1305**, **1307** respectively and schematically represent airflow unladen with drug substance into the dose cartridges, and airflow laden with drug flow out of the dose cartridges.

In some embodiments, clamping chamber **1300** comprises two dose pullers **2314** and associated dose cartridge transport mechanisms. The dose pullers **2314** are

positioned to pull a dose cartridge into the cartridge transport where they are positioned in sequence along an airflow conduit. Optionally, a clamping mechanism (not shown for clarity) is also provided; the functions of the clamping mechanism include, for example, electrode positioning and sealing of the airflow conduit.

In some embodiments, loading and/or heating of the dose cartridges is separately actuatable. Optionally, one or both dose cartridges **2300C**, **2300D** are positioned in the clamping chamber for use. Optionally, both are positioned, but only one is heated, the two are heated at different times, and/or the cartridges **2300C**, **2300D** are subjected to different heating profiles (comprising time, temperature, heating rate and/or onset, for example).

Optionally, a plurality of dose cartridges **2300C**, **2300D** comprise a single dose for a given inhalation. Optionally, airflow is estimated and controlled for the plurality of dose cartridges **2300C**, **2300D** in unison, essentially as described with respect to single dose cartridge clamping chamber embodiments herein.

It is noted that the temperature of air reaching a second dose cartridge along the path is potentially higher than ambient temperature due to passage through a first heated dose cartridge. Optionally, this is taken into account when setting a heating profile for the dose cartridges. In some embodiments the dose cartridges are heated in sequence with downstream doses heating before upstream ones.

Optionally, dose pullers **2314** are actuated together for dose cartridge transport. Alternatively, each puller **2314** is actuated separately to pull a specific dose cartridge from a specific location in the magazine. For example, a first dose cartridge **2300C** is taken by a first puller **2314** and then the dose cartridges are shifted in the magazine such that another dose cartridge **2300D** is available at a position accessible by the second puller **2314**. Optionally, the first dose cartridge **2300C** is taken when the user presses a button, positions the mouthpiece for use, or otherwise actuates the inhaler for dose cartridge transport. Optionally, the second dose cartridge **2300D** is taken automatically by the controller, or also taken up in response to the same or a second actuation by the user.

As used herein with reference to quantity or value, the term "about" means "within ±10% of".

The terms "comprises", "comprising", "includes", "including", "having" and their conjugates mean: "including but not limited to".

The term "consisting of" means: "including and limited to".

The term "consisting essentially of" means that the composition, method or structure may include additional ingredients, steps and/or parts, but only if the additional ingredients, steps and/or parts do not materially alter the basic and novel characteristics of the claimed composition, method or structure.

As used herein, the singular form "a", "an" and "the" include plural references unless the context clearly dictates otherwise. For example, the term "a compound" or "at least one compound" may include a plurality of compounds, including mixtures thereof.

The words "example" and "exemplary" are used herein to mean "serving as an example, instance or illustration". Any embodiment described as an "example" or "exemplary" is not necessarily to be construed as preferred or advantageous over other embodiments and/or to exclude the incorporation of features from other embodiments.

The word "optionally" is used herein to mean "is provided in some embodiments and not provided in other embodiments". Any particular embodiment of the invention may include a plurality of "optional" features except insofar as such features conflict.

As used herein the term "method" refers to manners, means, techniques and procedures for accomplishing a given task including, but not limited to, those manners, means, techniques and procedures either known to, or readily developed from known manners, means, techniques and procedures by practitioners of the chemical, pharmacological, biological, biochemical and medical arts.

As used herein, the term "treating" includes abrogating, substantially inhibiting, slowing or reversing the progression of a condition, substantially ameliorating clinical or aesthetical symptoms of a condition or substantially preventing the appearance of clinical or aesthetical symptoms of a condition.

Throughout this application, embodiments of this invention may be presented with reference to a range format. It should be understood that the description in range format is merely for convenience and brevity and should not be construed as an

inflexible limitation on the scope of the invention. Accordingly, the description of a range should be considered to have specifically disclosed all the possible subranges as well as individual numerical values within that range. For example, description of a range such as "from 1 to 6" should be considered to have specifically disclosed subranges such as "from 1 to 3", "from 1 to 4", "from 1 to 5", "from 2 to 4", "from 2 to 6", "from 3 to 6", *etc.*; as well as individual numbers within that range, for example, 1, 2, 3, 4, 5, and 6. This applies regardless of the breadth of the range.

Whenever a numerical range is indicated herein (for example "10-15", "10 to 15", or any pair of numbers linked by these another such range indication), it is meant to include any number (fractional or integral) within the indicated range limits, including the range limits, unless the context clearly dictates otherwise. The phrases "range/ranging/ranges between" a first indicate number and a second indicate number and "range/ranging/ranges from" a first indicate number "to", "up to", "until" or "through" (or another such range-indicating term) a second indicate number are used herein interchangeably and are meant to include the first and second indicated numbers and all the fractional and integral numbers therebetween.

Although the invention has been described in conjunction with specific embodiments thereof, it is evident that many alternatives, modifications and variations will be apparent to those skilled in the art. Accordingly, it is intended to embrace all such alternatives, modifications and variations that fall within the spirit and broad scope of the appended claims.

All publications, patents and patent applications mentioned in this specification are herein incorporated in their entirety by reference into the specification, to the same extent as if each individual publication, patent or patent application was specifically and individually indicated to be incorporated herein by reference. In addition, citation or identification of any reference in this application shall not be construed as an admission that such reference is available as prior art to the present invention. To the extent that section headings are used, they should not be construed as necessarily limiting.

It is appreciated that certain features of the invention, which are, for clarity, described in the context of separate embodiments, may also be provided in combination in a single embodiment. Conversely, various features of the invention, which are, for brevity, described in the context of a single embodiment, may also be provided

separately or in any suitable subcombination or as suitable in any other described embodiment of the invention. Certain features described in the context of various embodiments are not to be considered essential features of those embodiments, unless the embodiment is inoperative without those elements.

WHAT IS CLAIMED IS:

1. A dose cartridge for an inhaler device, the dose cartridge comprising:

a flat pallet of airflow-permeable material including a heat-vaporizing drug substance, the pallet having two opposing faces and being positioned in the dose cartridge so as to expose the two faces to airflow;

a supporting member coupled to the pallet to support the pallet from at least one side of the pallet joining the two faces; and

an electrically resistive heating element extending at least partially across at least one of the two opposing faces from an attachment with the supporting member.

2. The dose cartridge of claim 1, wherein the supporting member frames at least a portion of at least three sides of the pallet.

3. The inhaler dose cartridge of any one of the preceding claims, wherein the resistive heating element is in thermal contact with and extends across at least two opposite surfaces of the pallet.

4. The inhaler dose cartridge of claim 3, wherein the resistive heating element comprises a U-shape with two ends around a hollow in which the pallet is positioned.

5. The inhaler dose cartridge of claim 4, wherein an electrical current flows across the two opposite surfaces when a voltage is applied between said two ends.

6. The inhaler dose cartridge of any one of claims 1-2, wherein the resistive heating element comprises at least two resistive heating elements, wherein each resistive heating element is in thermal contact with and extends across at least a portion of the pallet.

7. The inhaler dose cartridge of claim 6, wherein the at least two resistive heating elements extend across opposite surfaces of the pallet.

8. The inhaler dose cartridge of any one of claims 1-2, wherein the resistive heating element has a portion encased and extending within at least a portion of the pallet.

9. The inhaler dose cartridge of any one of the preceding claims, wherein the resistive heating element extends across a surface of the pallet, and comprises a plurality of protrusions into the pallet.

10. The inhaler dose cartridge of any one of the preceding claims, wherein at least a portion of the resistive heating element extending across the pallet is permeable to the passage of air.

11. The inhaler dose cartridge of any one of the preceding claims, wherein a portion of the resistive heating element extending across the pallet comprises a barrier which prevents a granulate portion of the pallet from leaving the inhaler dose cartridge.

12. The inhaler dose cartridge of any one of claims 1-11, wherein the resistive heating unit comprises a woven mesh.

13. The inhaler dose cartridge of any one of claims 1-11, wherein the resistive heating unit comprises at least one ribbon of etched metal foil.

14. The inhaler dose cartridge of claim 13, wherein the at least one ribbon of etched metal foil is backed by a polymer backing comprising a plurality of perforations making it permeable to the passage of air.

15. The inhaler dose cartridge of claim 13, wherein the at least one ribbon of etched metal foil comprises a narrowed region having elevated resistance, which melts to break electrical continuity along the at least one ribbon during dissipation of electrical power applied after release the heat-vaporizing drug substance.

16. The inhaler dose cartridge of claim 13, wherein the at least one ribbon of etched metal foil is attached to a fuse element configured to break electrical continuity along the at least one ribbon during dissipation of electrical power applied after release the heat-vaporizing drug substance.

17. The inhaler dose cartridge of any one of claims 1-16, wherein at least a portion of the resistive heating element is embedded in the pallet.

18. The inhaler dose cartridge of any one of claims 1-17, comprising an air-permeable support member attached along at least one of the two faces of the pallet, wherein the air-permeable support member is sufficiently closed to prevent a granulate portion of the pallet from leaving the inhaler dose cartridge.

19. The inhaler dose cartridge of claim 18, wherein the air-permeable support member separates the pallet and the heating element.

20. The inhaler dose cartridge of any one of the preceding claims, wherein said material comprises cannabis.

21. The inhaler dose cartridge of any one of the preceding claims, wherein said material comprises at least one botanical substance selected from the group consisting of *Cannabis sativa*, *Cannabis indica*, *Cannabis ruderalis*, *Acacia* spp.., *Amanita muscaria*, Yage, *Atropa belladonna*, *Areca catechu*, *Brugmansia* spp.., *Brunfelsia latifolia*, *Desmanthus illinoensis*, *Banisteriopsis caapi*, *Trichocereus* spp., *Theobroma cacao*, *Capsicum* spp., *Cestrum* spp., *Erythroxylum coca*, *Solenostemon scutellarioides*, *Arundo donax*, *Coffea arabica*, *Datura* spp., *Desfontainia* spp., *Diplopterys cabrerana*, *Ephedra sinica*, *Claviceps purpurea*, *Paullinia cupana*, *Argyreia nervosa*, *Hyoscyamus niger*, *Tabernanthe iboga*, *Lagochilus inebriens*, *Justicia pectoralis*, *Sceletium tortuosum*, *Piper methysticum*, *Catha edulis*, *Mitragyna speciosa*, *Leonotis leonurus*, *Nymphaea* spp., *Nelumbo* spp., *Sophora secundiflora*, *Mucuna pruriens*, *Mandragora officinarum*, *Mimosa tenuiflora*, *Ipomoea violacea*, *Psilocybe* spp., *Panaeolus* spp., *Myristica fragrans*, *Turbina corymbosa*, *Passiflora incarnata*,

Lophophora williamsii, *Phalaris* spp., *Duboisia hopwoodii*, *Papaver somniferum*, *Psychotria viridis*, spp., *Salvia divinorum*, *Combretum quadrangulare*, *Trichocereus pachanoi*, *Heimia salicifolia*, *Stipa robusta*, *Solandra* spp., *Hypericum perforatum*, *Tabernaemontana* spp., *Camellia sinensis*, *Nicotiana tabacum*, *Nicotiana rustica*, *Virola theidora*, *Voacanga africana*, *Lactuca virosa*, *Artemisia absinthium*, *Ilex paraguariensis*, *Anadenanthera* spp., *Corynanthe yohimbe*, *Calea zacatechichi*, *Coffea* spp. (*Rubiaceae*), *Sapindaceae* spp., *Camellia* spp., *Malvaceae* spp., *Aquifoliaceae* spp., *Hoodia* spp. *Chamomilla recutita*, *Passiflora incarnate*, *Camellia sinensis*, *Mentha piperita*, *Mentha spicata*, *Rubus idaeus*, *Eucalyptus globulus*, *Lavandula officinalis*, *Thymus vulgaris*, *Melissa officinalis*, Tobacco, Aloe Vera, Angelica, Anise, Ayahuasca (*Banisteriopsis caapi*), Barberry, Black Horehound, Blue Lotus, Burdock, Camomille/Chamomile, Caraway, Cat's Claw, Clove, Comfrey, Corn Silk, Couch Grass, Damiana, Damiana, Dandelion, Ephedra, Eucalyptus, Evening Primrose, Fennel, Feverfew, Fringe Tree, Garlic, Ginger, Ginkgo, Ginseng, Goldenrod, Goldenseal, Gotu Kola, Green Tea, Guarana, Hawthorn, Hops, Horsetail, Hyssop, Kola Nut, Kratom, Lavender, Lemon Balm, Licorice, Lion's Tail (Wild Dagga), Maca Root, Marshmallow, Meadowsweet, Milk Thistle, Motherwort, Passion Flower, Passionflower, Peppermint, Prickly Poppy, Purslane, Raspberry Leaf, Red Poppy, Sage, Saw Palmetto, Sida Cordifolia, Sinicuichi (Mayan Sun Opener), Spearmint, Sweet Flag, Syrian Rue (*Peganum harmala*), Thyme, Turmeric, Valerian, Wild Yam, Wormwood, Yarrow, Yerba Mate, and Yohimbe.

22. The inhaler dose cartridge of any one of the preceding claims, wherein the electrically resistive heating element comprises an electrode contact-receiving region on either side of a region extending across the pallet.

23. The inhaler dose cartridge of any one of the preceding claims, comprising a plurality of heating element regions, each region being separately configured to receive electric current.

24. The inhaler dose cartridge of claim 23, wherein the plurality of heating elements is associated with a corresponding plurality of pallets.

25. The inhaler dose cartridge of any one of the preceding claims, wherein the resistive heating element comprises an attachment element, shaped for attachment to the transport arm of a dose puller.

26. The inhaler dose cartridge of any one of the preceding claims, wherein at least a portion of said dose cartridge is configured to allow a flow through said pallet at a rate of at least 0,5 liters of gas per minute under a pulling vacuum of at least 1 kPa.

27. The inhaler dose cartridge of claim 1, wherein the supporting member is surrounded by the pallet where it extends between the two faces of the pallet.

28. The inhaler dose cartridge of claim 27, wherein the supporting member comprises a hollow region open on at least one of the two faces.

29. The inhaler dose cartridge of any one of the preceding claims, wherein the resistive heating element is a metal resistive heating element.

30. A method of manufacturing an inhaler dose cartridge for pulmonary delivery of a heat-vaporizing drug substance, comprising:

preparing a pallet of material comprising said heat-vaporizing drug substance;

attaching the pallet to a supporting member extending between the two faces of the pallet; and

attaching an electrically resistive heating element to the pallet.

31. The method of claim 30, wherein said preparing said pallet comprises:

placing a granulated botanical substance within a dose chamber on a planar surface; and

leveling the botanical substance within the dose chamber.

32. The method of claim 30, wherein preparing said pallet comprises:

placing a granulated botanical substance within a dose chamber on a planar surface;

vibrating said planar surface until the granulated botanical substance is leveled; and

pressing the leveled botanical substance, reducing the volume thereof by at least 50% to form a pallet.

33. The method of claim 30, wherein preparing said pallet comprises cutting a tape section from a botanical substance formed into a tape.

34. The method of claim 30, wherein preparing said pallet comprises loading an air permeable granulated botanical material with a gel, fluid or powder comprising said heat-vaporizing drug substance.

35. The method of any one of claims 30-34, wherein said material comprises cannabis.

36. The method of any one of claims 30-35, wherein said material comprises at least one botanical substance selected from the group consisting of *Cannabis sativa*, *Cannabis indica*, *Cannabis ruderalis*, *Acacia* spp., *Amanita muscaria*, Yage, *Atropa belladonna*, *Areca catechu*, *Brugmansia* spp., *Brunfelsia latifolia*, *Desmanthus illinoensis*, *Banisteriopsis caapi*, *Trichocereus* spp., *Theobroma cacao*, *Capsicum* spp., *Cestrum* spp., *Erythroxylum coca*, *Solenostemon scutellarioides*, *Arundo donax*, *Coffea arabica*, *Datura* spp., *Desfontainia* spp., *Diplopterys cabrerana*, *Ephedra sinica*, *Claviceps purpurea*, *Paullinia cupana*, *Argyreia nervosa*, *Hyoscyamus niger*, *Tabernanthe iboga*, *Lagochilus inebriens*, *Justicia pectoralis*, *Sceletium tortuosum*, *Piper methysticum*, *Catha edulis*, *Mitragyna speciosa*, *Leonotis leonurus*, *Nymphaea* spp., *Nelumbo* spp., *Sophora secundiflora*, *Mucuna pruriens*, *Mandragora officinarum*, *Mimosa tenuiflora*, *Ipomoea violacea*, *Psilocybe* spp., *Panaeolus* spp., *Myristica fragrans*, *Turbina corymbosa*, *Passiflora incarnata*, *Lophophora williamsii*, *Phalaris* spp., *Duboisia hopwoodii*, *Papaver somniferum*, *Psychotria viridis*, spp., *Salvia divinorum*, *Combretum quadrangulare*, *Trichocereus pachanoi*, *Heimia salicifolia*, *Stipa*

robusta, *Solandra* spp., *Hypericum perforatum*, *Peganum harmala*, *Tabernaemontana* spp., *Camellia sinensis*, *Nicotiana tabacum*, *Nicotiana rustica*, *Virola theidora*, *Voacanga africana*, *Lactuca virosa*, *Artemisia absinthium*, *Ilex paraguariensis*, *Anadenanthera* spp., *Corynanthe yohimbe*, *Calea zacatechichi*, *Coffea* spp. (*Rubiaceae*), *Sapindaceae* spp., *Camellia* spp., *Malvaceae* spp., *Aquifoliaceae* spp., *Hoodia* spp. *Chamomilla recutita*, *Passiflora incarnate*, *Camellia sinensis*, *Mentha piperita*, *Mentha spicata*, *Rubus idaeus*, *Eucalyptus globulus*, *Lavandula officinalis*, *Thymus vulgaris*, *Melissa officinalis*, Tobacco, Aloe Vera, Angelica, Anise, Ayahuasca (*Banisteriopsis caapi*), Barberry, Black Horehound, Blue Lotus, Burdock, Camomille/Chamomile, Caraway, Cat's Claw, Clove, Comfrey, Corn Silk, Couch Grass, Damiana, Damiana, Dandelion, Ephedra, Eucalyptus, Evening Primrose, Fennel, Feverfew, Fringe Tree, Garlic, Ginger, Ginkgo, Ginseng, Goldenrod, Goldenseal, Gotu Kola, Green Tea, Guarana, Hawthorn, Hops, Horsetail, Hyssop, Kola Nut, Kratom, Lavender, Lemon Balm, Licorice, Lion's Tail (Wild Dagga), Maca Root, Marshmallow, Meadowsweet, Milk Thistle, Motherwort, Passion Flower, Passionflower, Peppermint, Prickly Poppy, Purslane, Raspberry Leaf, Red Poppy, Sage, Saw Palmetto, Sida Cordifolia, Sinicuichi (Mayan Sun Opener), Spearmint, Sweet Flag, Syrian Rue (*Peganum harmala*), Thyme, Turmeric, Valerian, Wild Yam, Wormwood, Yarrow, Yerba Mate, and Yohimbe.

37. The method of any one of claims 31-32, wherein said granulated botanical substance comprises botanical substance having maintained its microstructure intact.

38. The method of any one of claims 30-37, wherein said preparing a pallet comprises freezing a botanical substance, and grinding the frozen botanical substance to granulate it, wherein the grinding is substantially without breaking the microstructure of the botanical substance.

39. The method of claim 38, wherein the unbroken microstructure comprises at least 90% of vacuoles containing the drug substance remaining unbroken after granulation.

40. The method of claim 30, wherein preparing said pallet comprises loading an air permeable material with a gel, fluid or powder comprising said heat-vaporizing drug substance.

41. The method of any one of claims 30-40, wherein said attaching the pallet to a supporting member is performed during formation of the pallet.

42. An inhaler dose cartridge for pulmonary delivery of a heat-vaporizing drug substance to a user comprising:

an airflow-permeable pallet of a material comprising said heat-vaporizing drug, wherein the pallet is oriented within the dose cartridge such that it is subjected to airflow through the pallet between two face surfaces of thereof;

a supporting member extending between the two faces of the pallet; and

an airflow permeable retaining element extending across at least one of the two face surfaces and connected to the supporting member.

43. A clamping chamber for an inhaler dose cartridge for pulmonary delivery of a heat-vaporizing drug substance to a user comprising:

a cartridge transport configured to move the inhaler dose cartridge from a storage position into a use position;

a holder for holding a dose cartridge such that a heat-vaporizing drug substance is in sealed alignment with an air conduit of said clamping chamber; and

electrodes positioned to be in electrical contact with at least two electrical contact receiving regions of an electrically resistive heating element of an inhaler dose cartridge in the clamping chamber.

44. The clamping chamber of claim 43, comprising:

a plurality of the cartridge transports each configured to move a corresponding inhaler dose cartridge;

a plurality of holders corresponding to the plurality of cartridge transports; and

corresponding electrodes for each of the cartridge transports.

45. An inhaler device comprising the clamping chamber of any one of claims 43-44.

46. A dose cartridge dispenser comprising a plurality of dose cartridges within a closed container, and including an interlock which, after dispensing of a first dose cartridge from the container, prevents dispensing of a second dose cartridge from the container until the first dose cartridge is returned to the dispenser.

47. The dose cartridge dispenser of claim 46, wherein the dose cartridge is dispensed to a substance vaporizing unit, and the operation of the interlock comprises inserting the substance vaporizing unit into the dose cartridge dispenser.

48. A vaporizer device, comprising:

a compartment sized to fittingly receive a dose cartridge from a dose cartridge container while the vaporizer device is fitted to the dose cartridge container, and

a power unit operable, while the vaporizer device is removed from the dose cartridge container, to deliver current to a heating element of the fittingly received dose cartridge, for volatilization of a volatilizing substance contained by the dose cartridge.

49. The vaporizer device of claim 48, including the dose cartridge container, the dose cartridge container containing a plurality of said dose cartridges.

50. The dose cartridge of claim 1, wherein the supporting member reduces less than 20% of the exposure of either of the two faces to airflow.

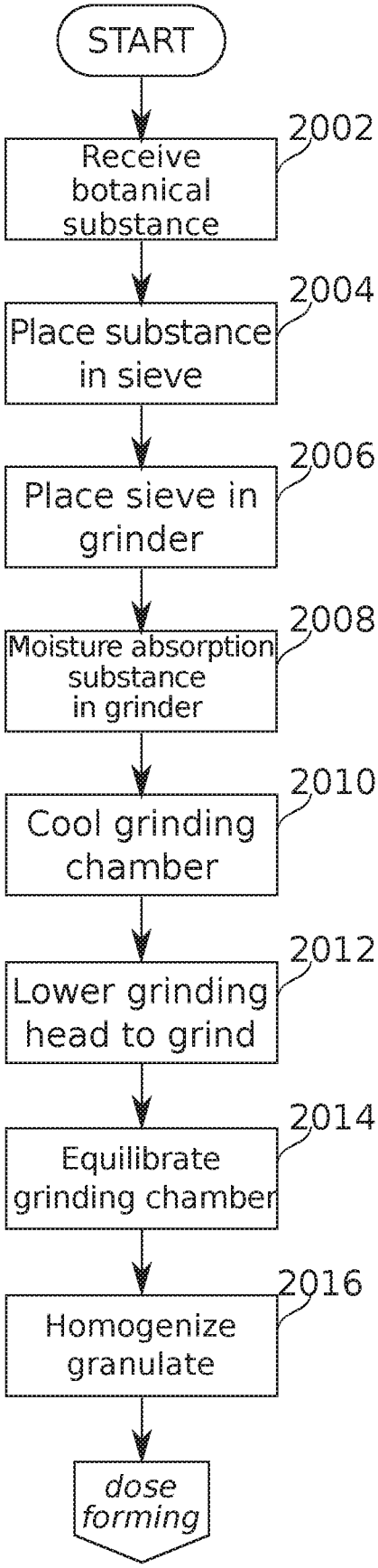
START
Receive botanical substance
2002
Place substance in sieve
2004
Place sieve in grinder
2006
Moisture absorption substance in grinder
2008
Cool grinding chamber
2010
Lower grinding head to grind
2012
Equilibrate grinding chamber
2014
Homogenize granulate
2016
dose forming

FIG. 1

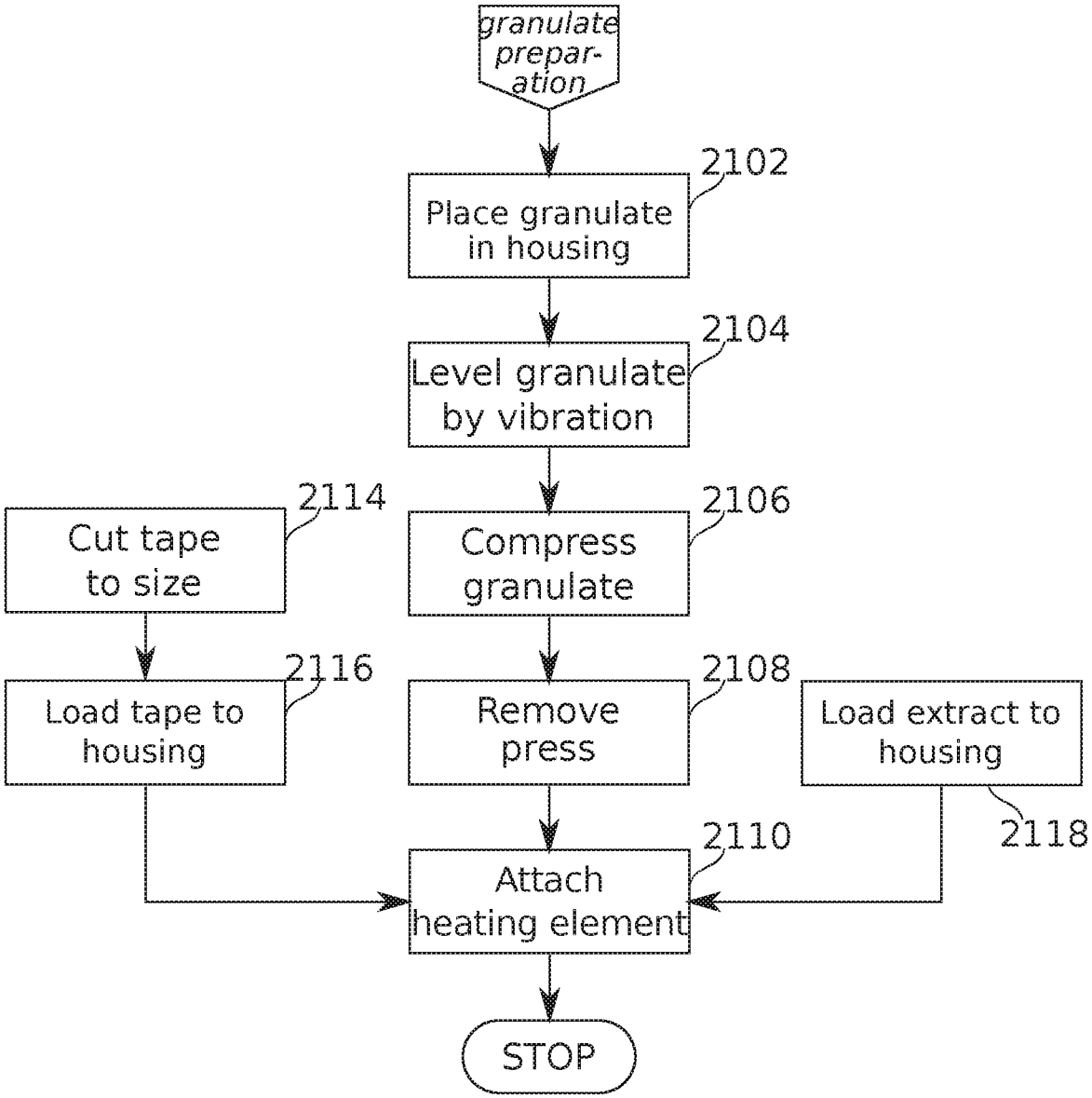
granulate prepar-ation
2102
Place granulate in housing
2104
Level granulate by vibration
2114
Cut tape to size
2106
Compress granulate
2116
Load tape to housing
2108
Remove press
Load extract to housing
2118
2110
Attach heating element
STOP

FIG. 2

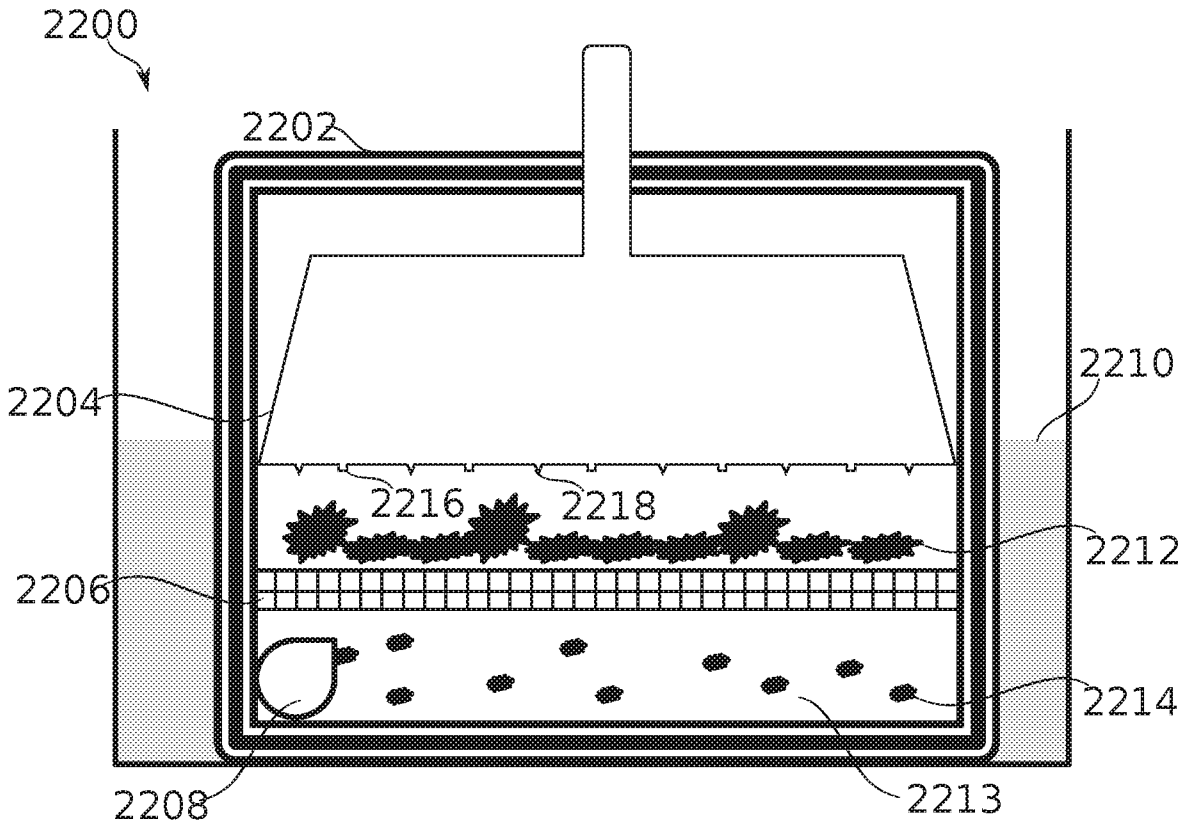
2200
2202
2204
2210
2216
2218
2212
2206
2214
2208
2213

FIG. 3

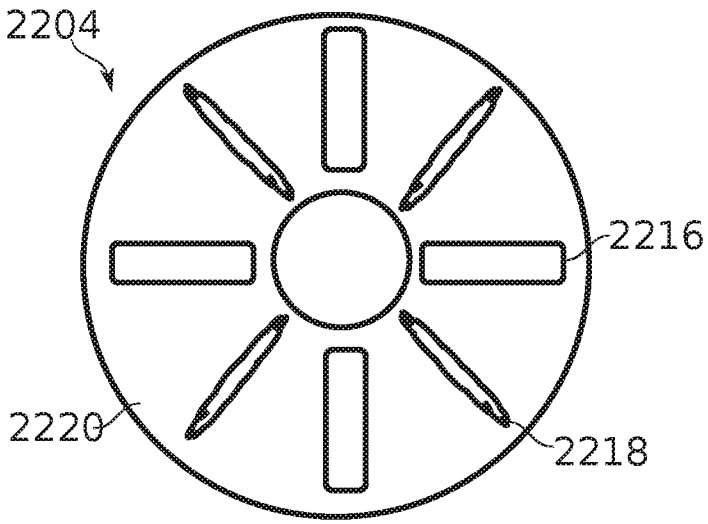
2204
2216
2220
2218

FIG. 4

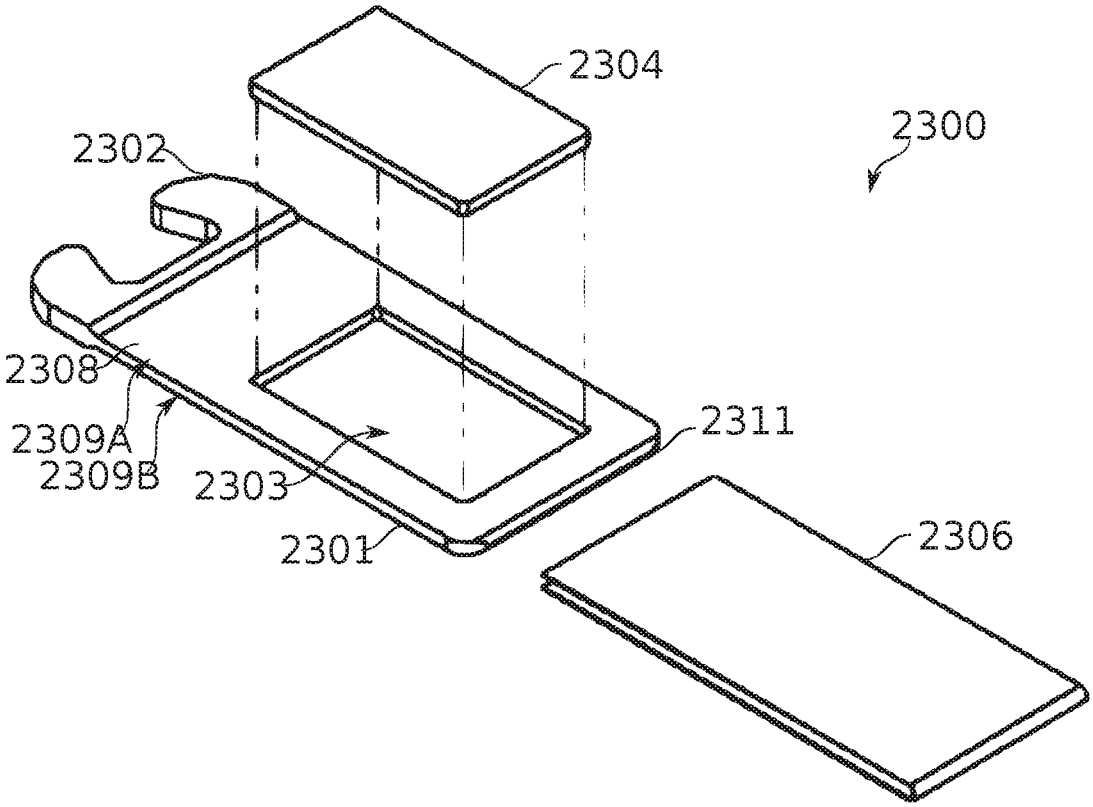
2304
2300
2302
2308
2309A
2309B
2303
2311
2301
2306

FIG. 5A

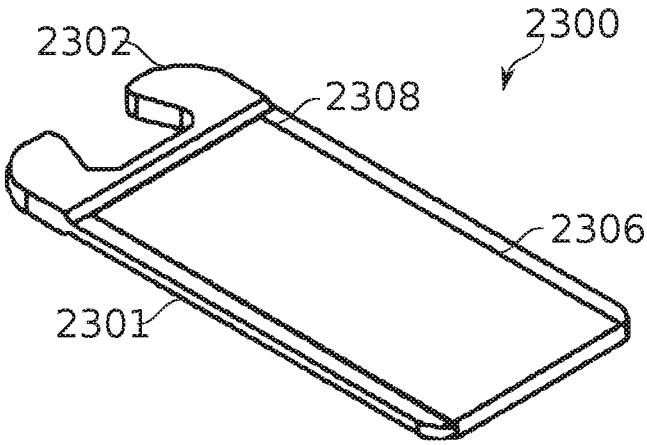
2300
2302
2308
2306
2301

FIG. 5B

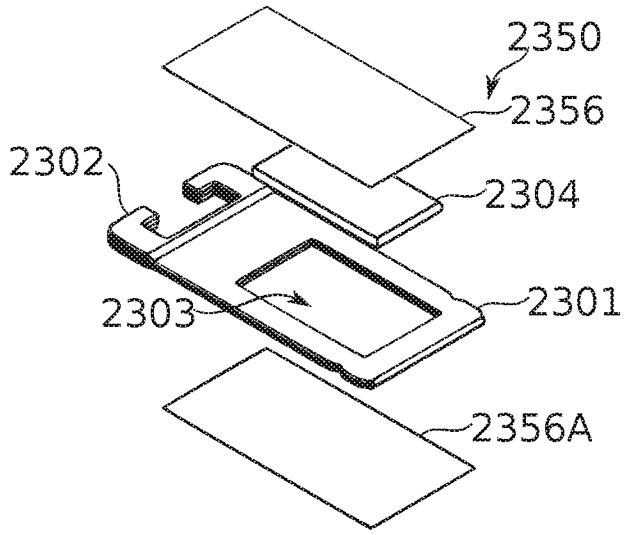

FIG. 5C

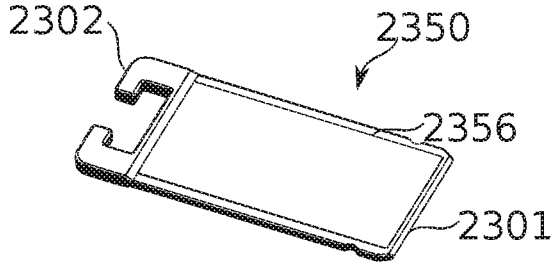

FIG. 5D

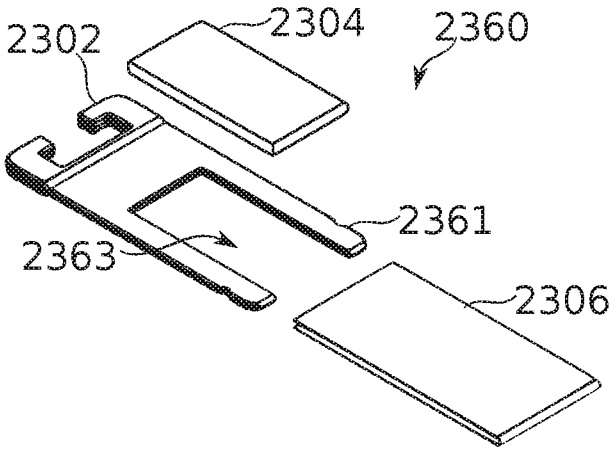

FIG. 5E

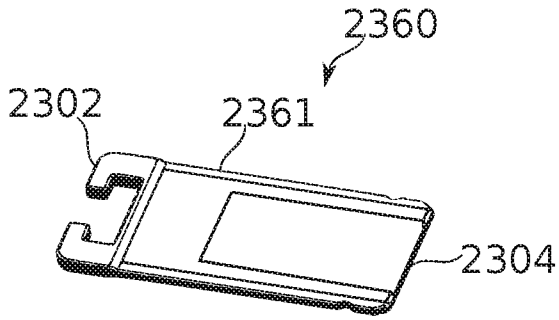

FIG. 5F

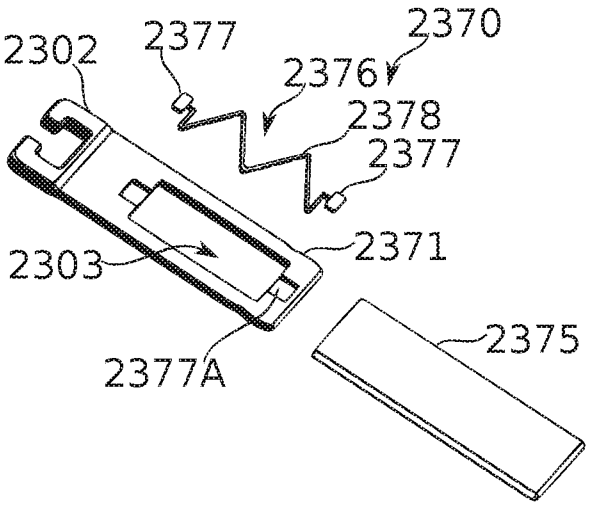

FIG. 5G

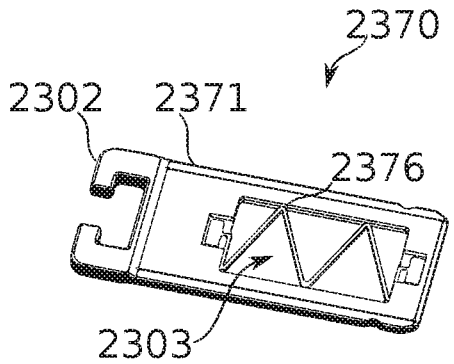

FIG. 5H

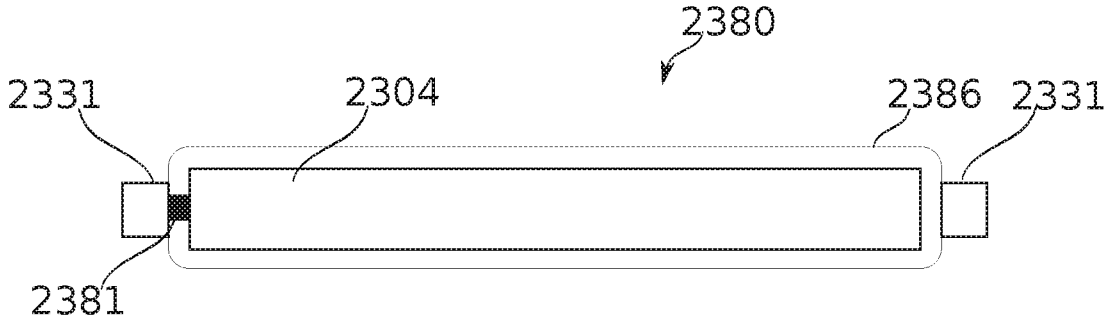

FIG. 5I

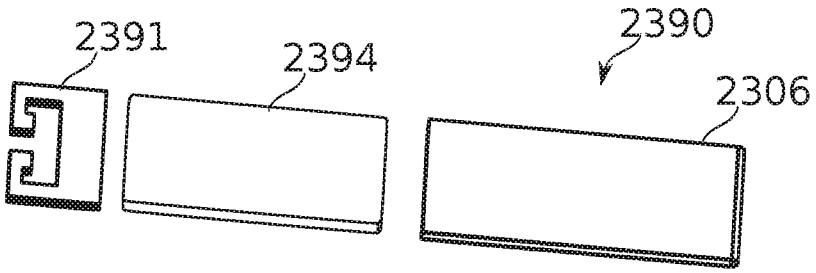

FIG. 5J

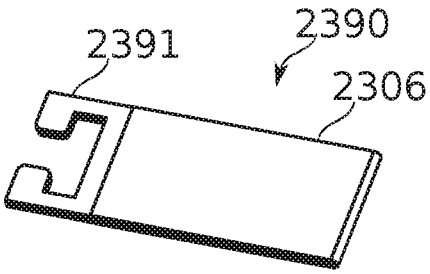

FIG. 5K

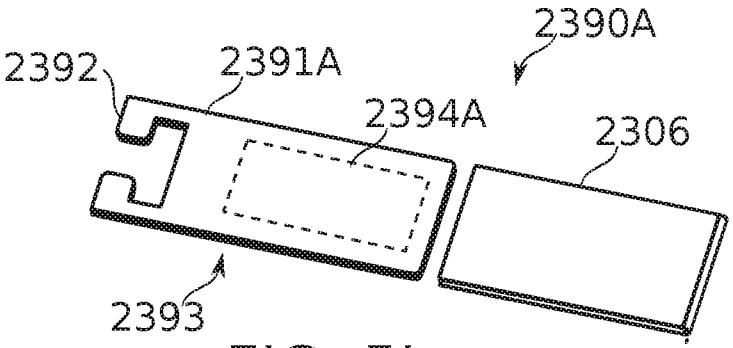

FIG. 5L

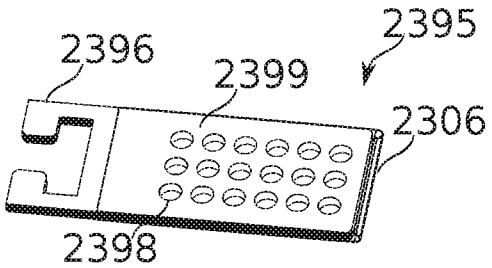

FIG. 5M

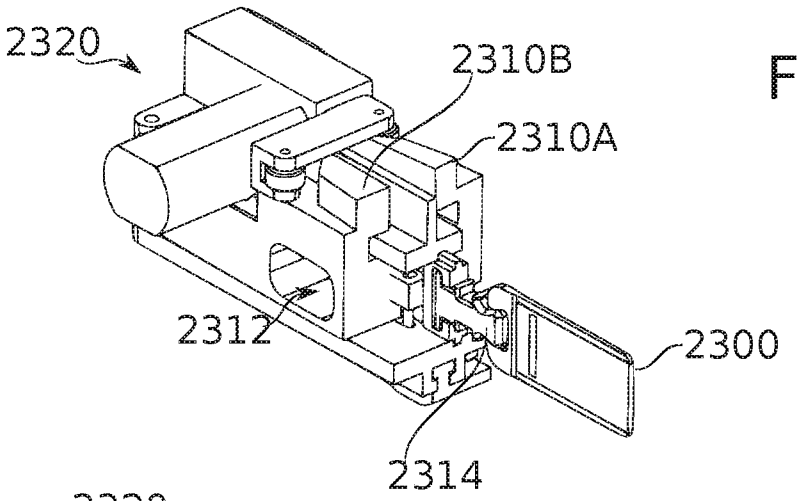

FIG. 6A

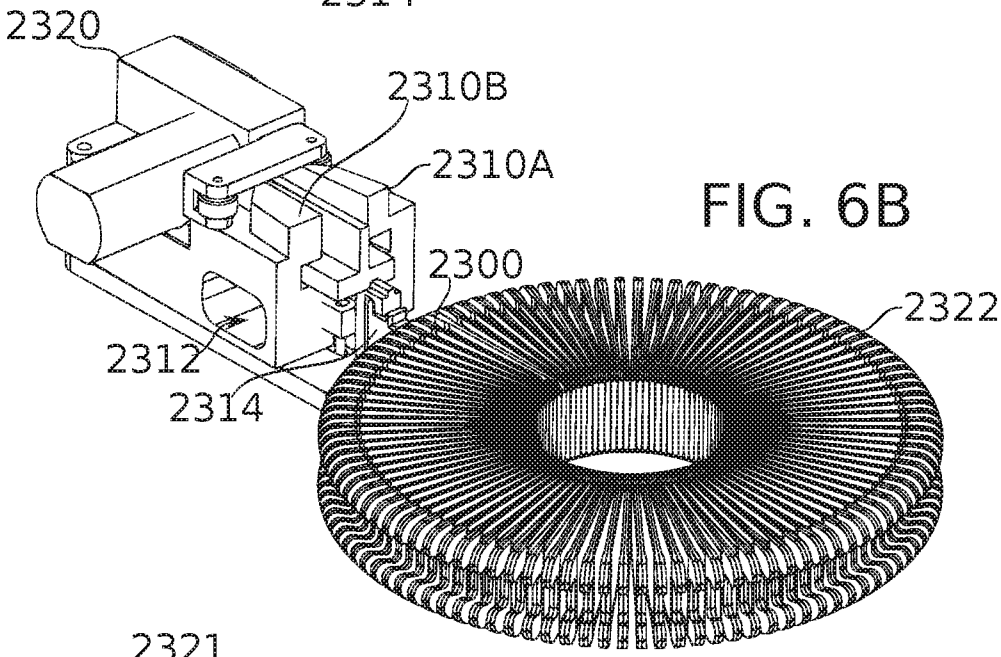

FIG. 6B

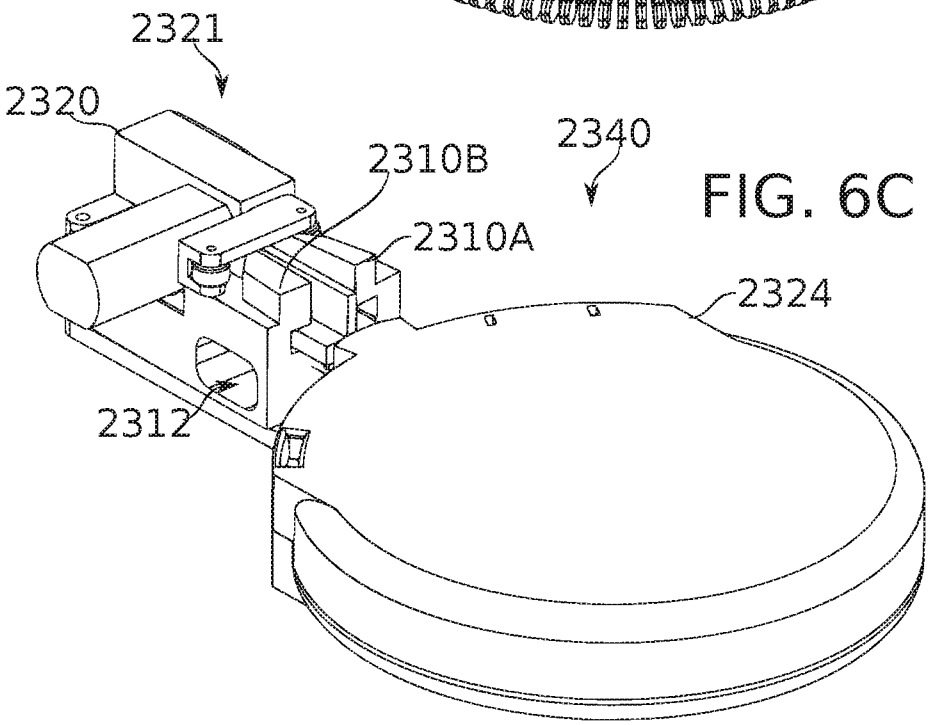

FIG. 6C

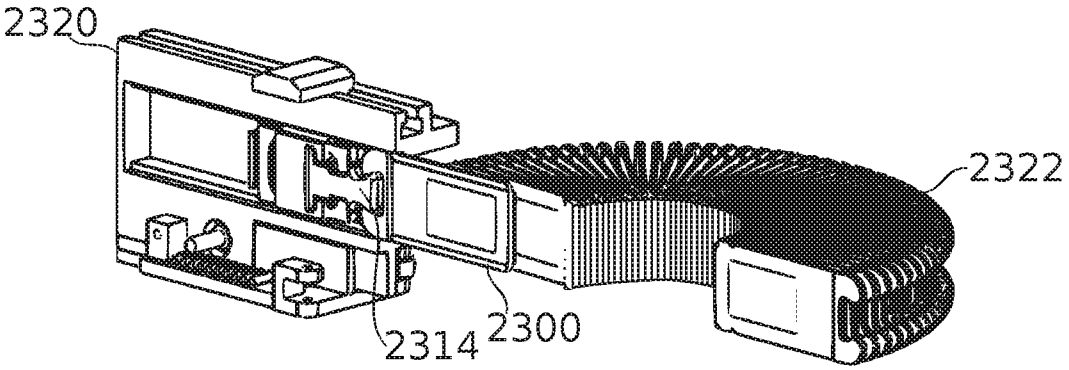

FIG. 6D

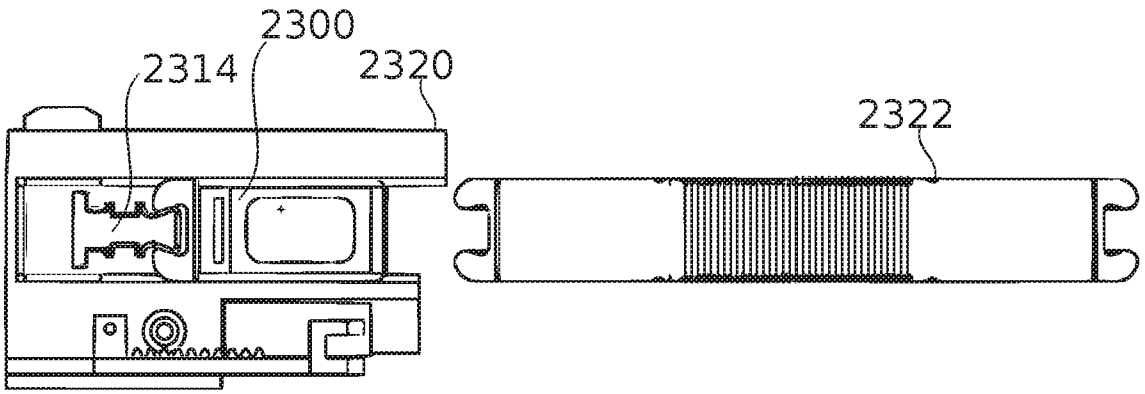

FIG. 6E

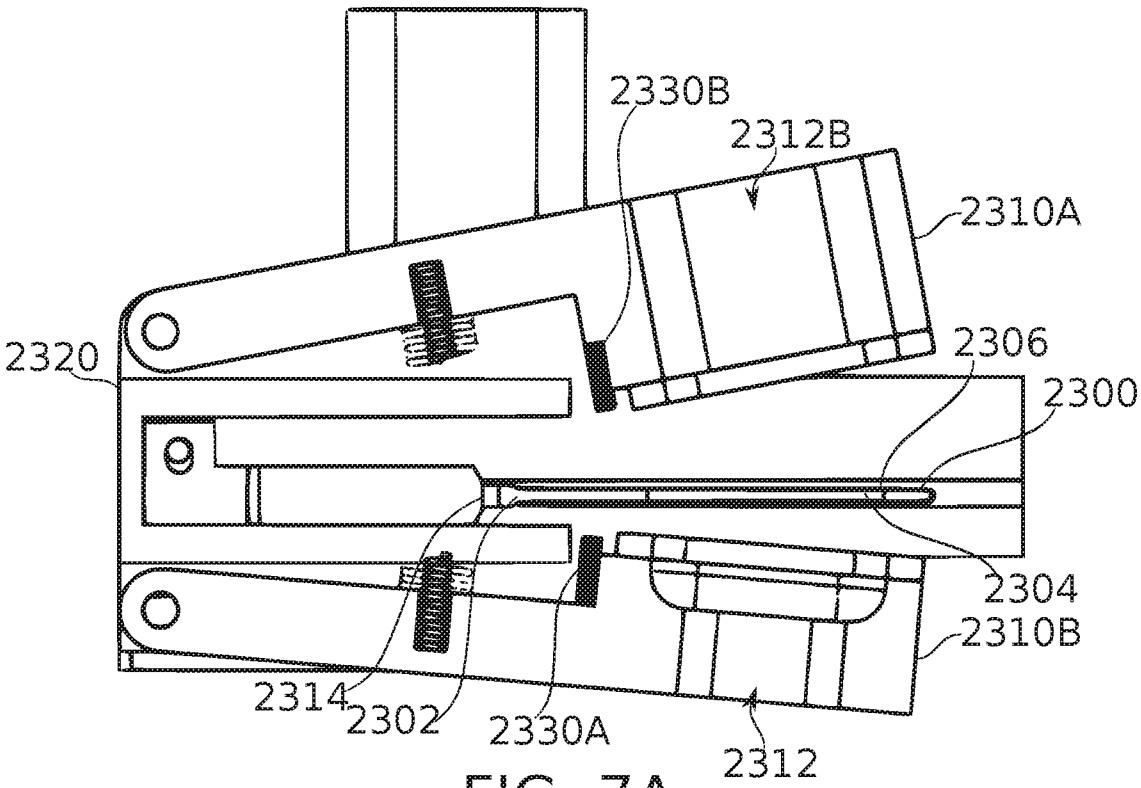
2330B
2312B
2310A
2320
2306
2300
2304
2310B
2314
2302
2330A
2312

FIG. 7A

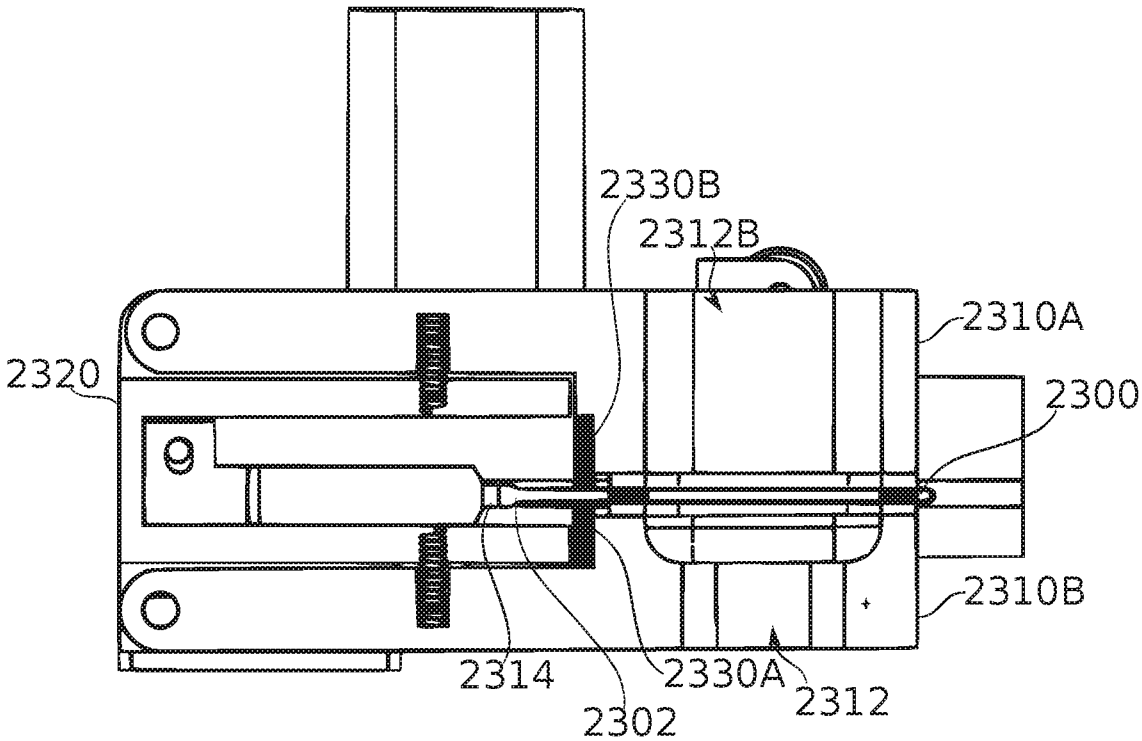
2330B
2312B
2310A
2320
2300
2310B
2314
2330A
2312
2302

FIG. 7B

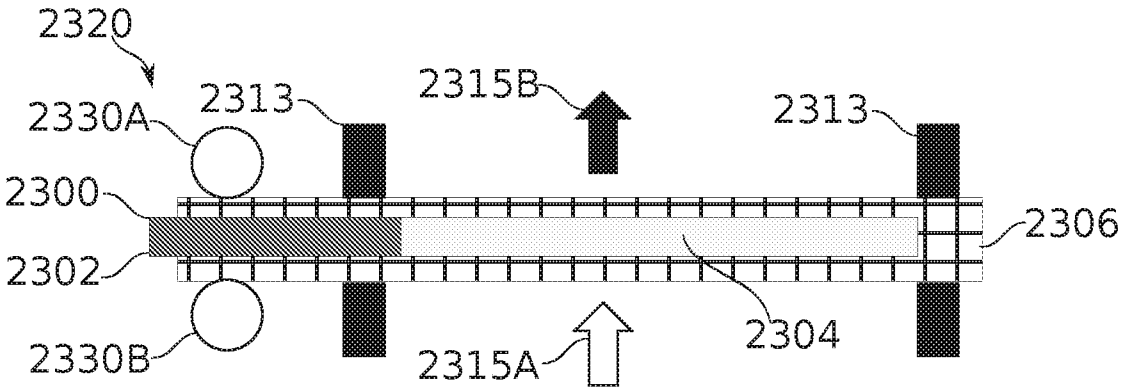

FIG. 7C

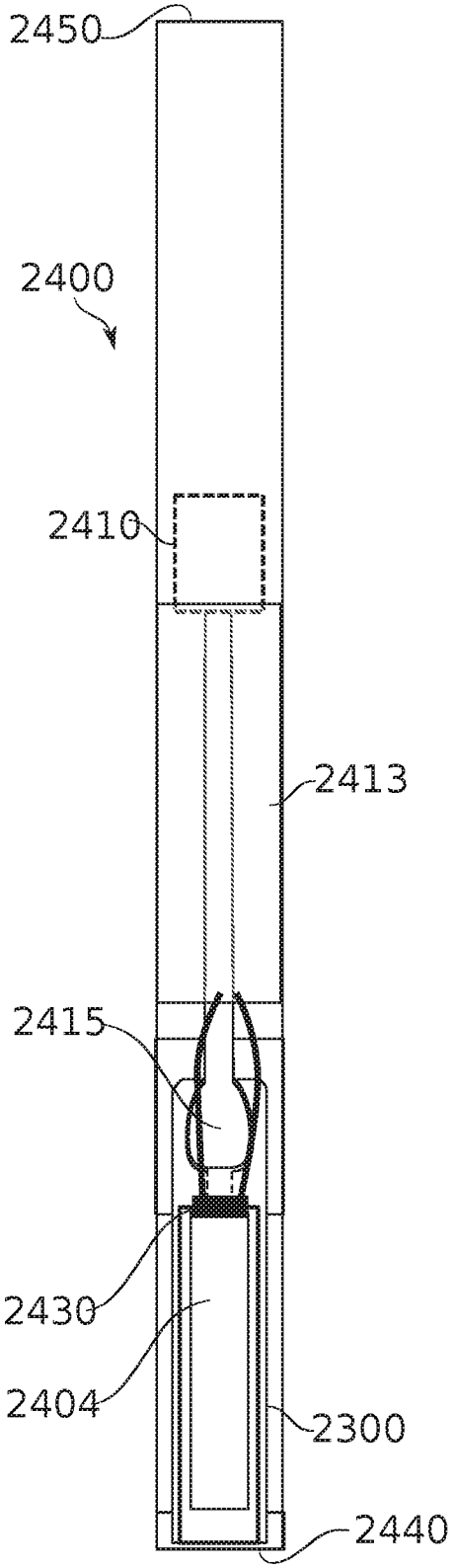
2450
2400
2410
2413
2415
2430
2404
2300
2440

FIG. 8A

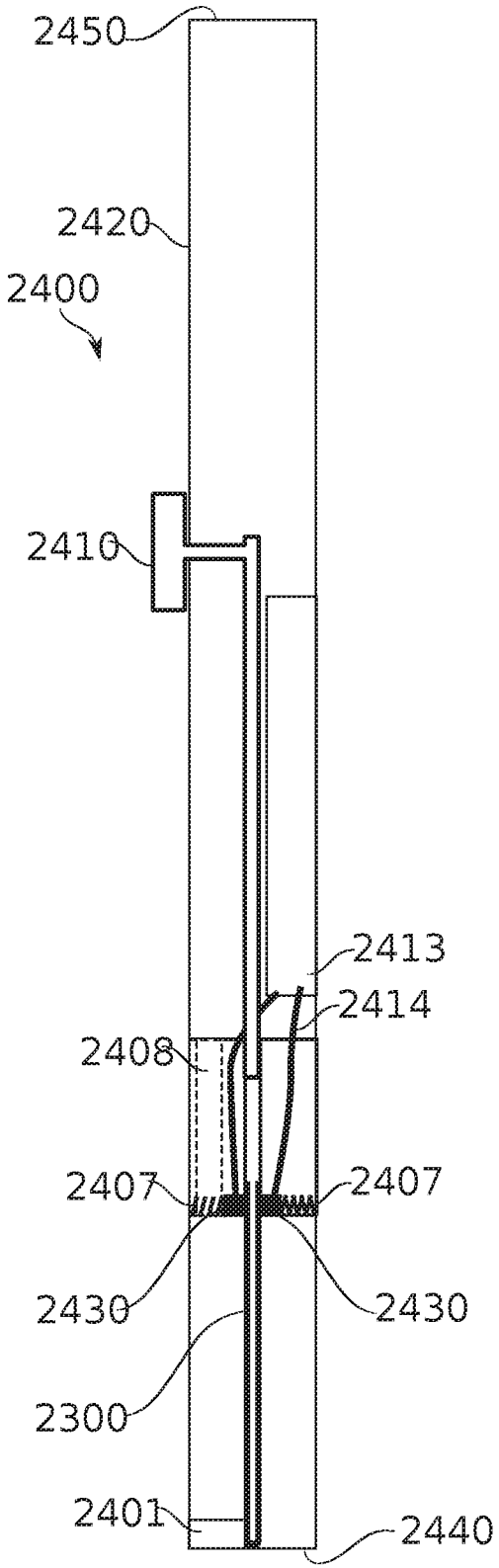
2450
2420
2400
2410
2413
2414
2408
2407
2407
2430
2430
2300
2401
2440

FIG. 8B

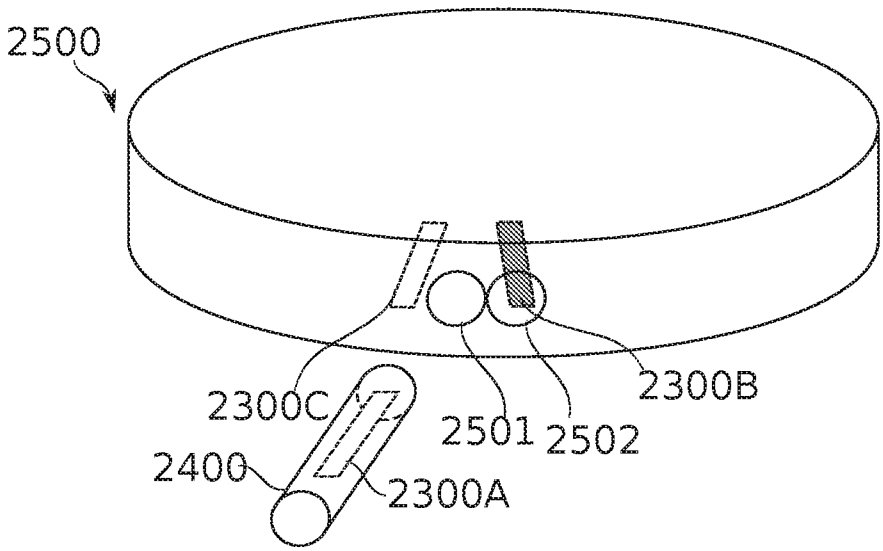

FIG. 9

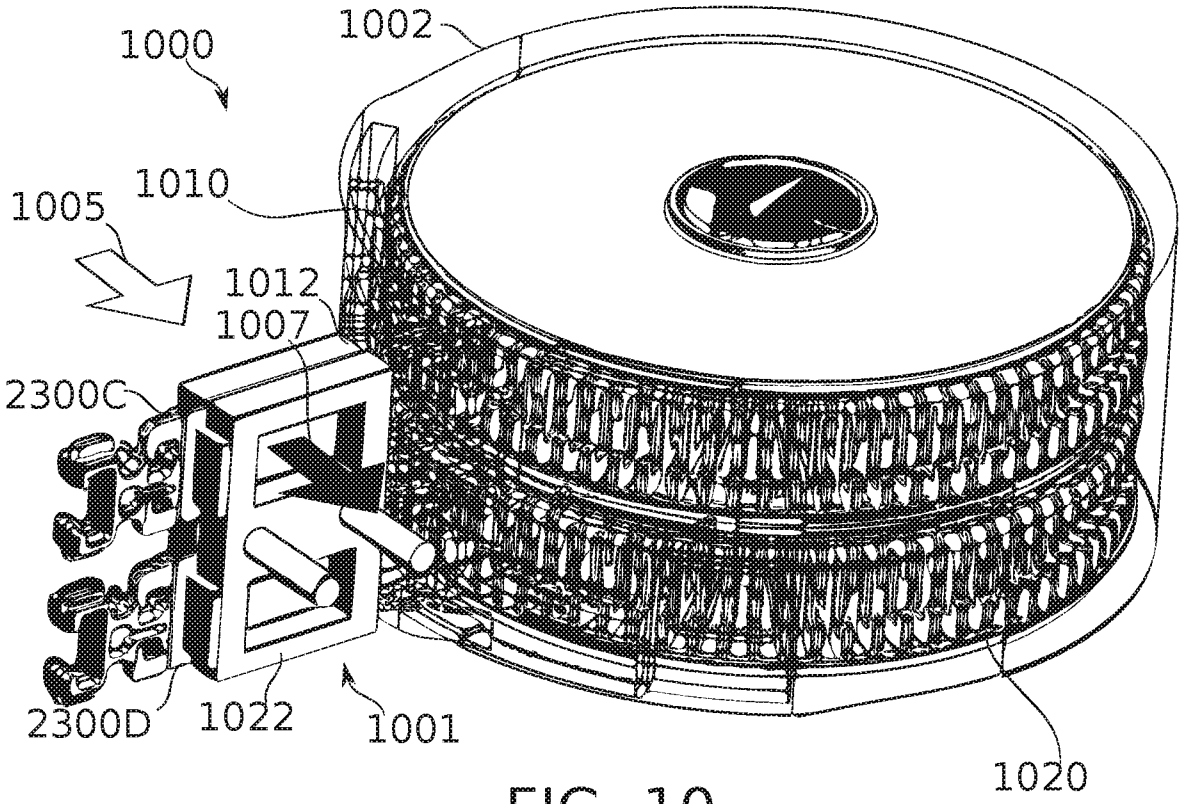

FIG. 10

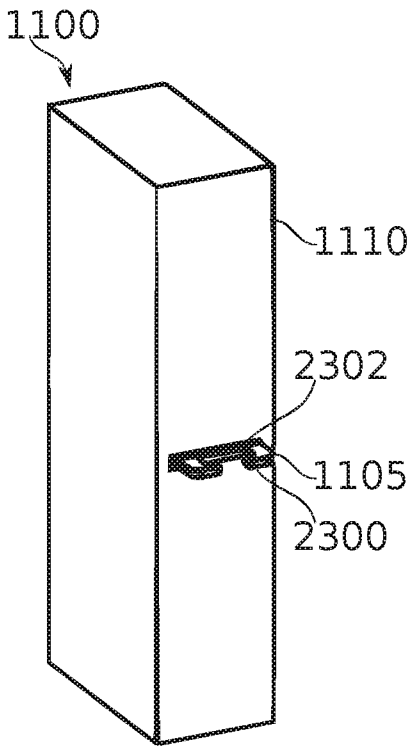

FIG. 11A

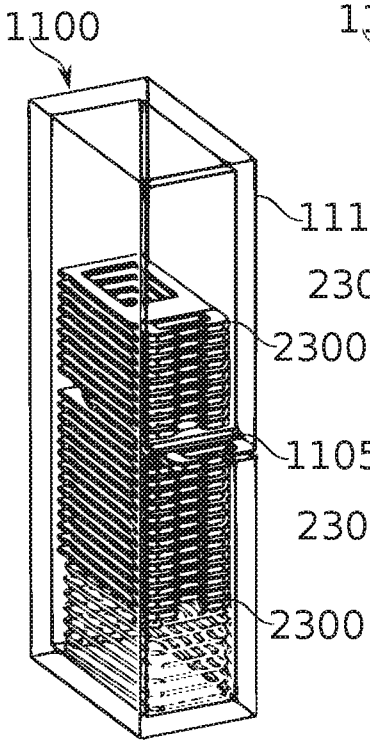

FIG. 11B

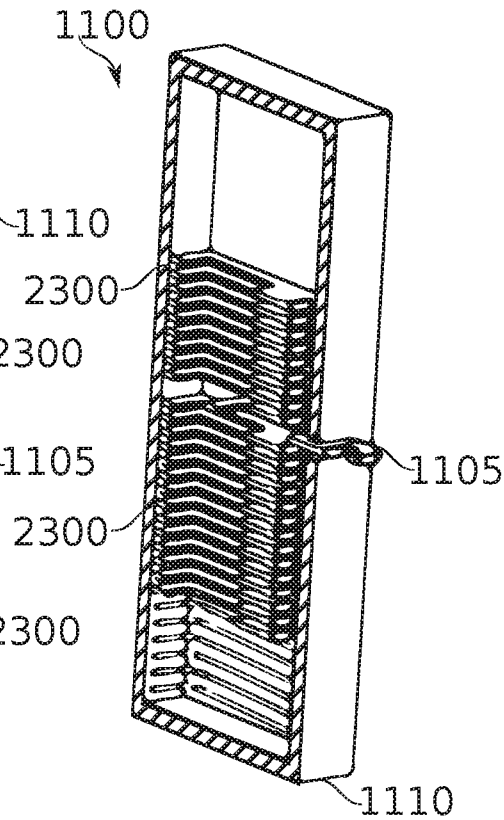

FIG. 11C

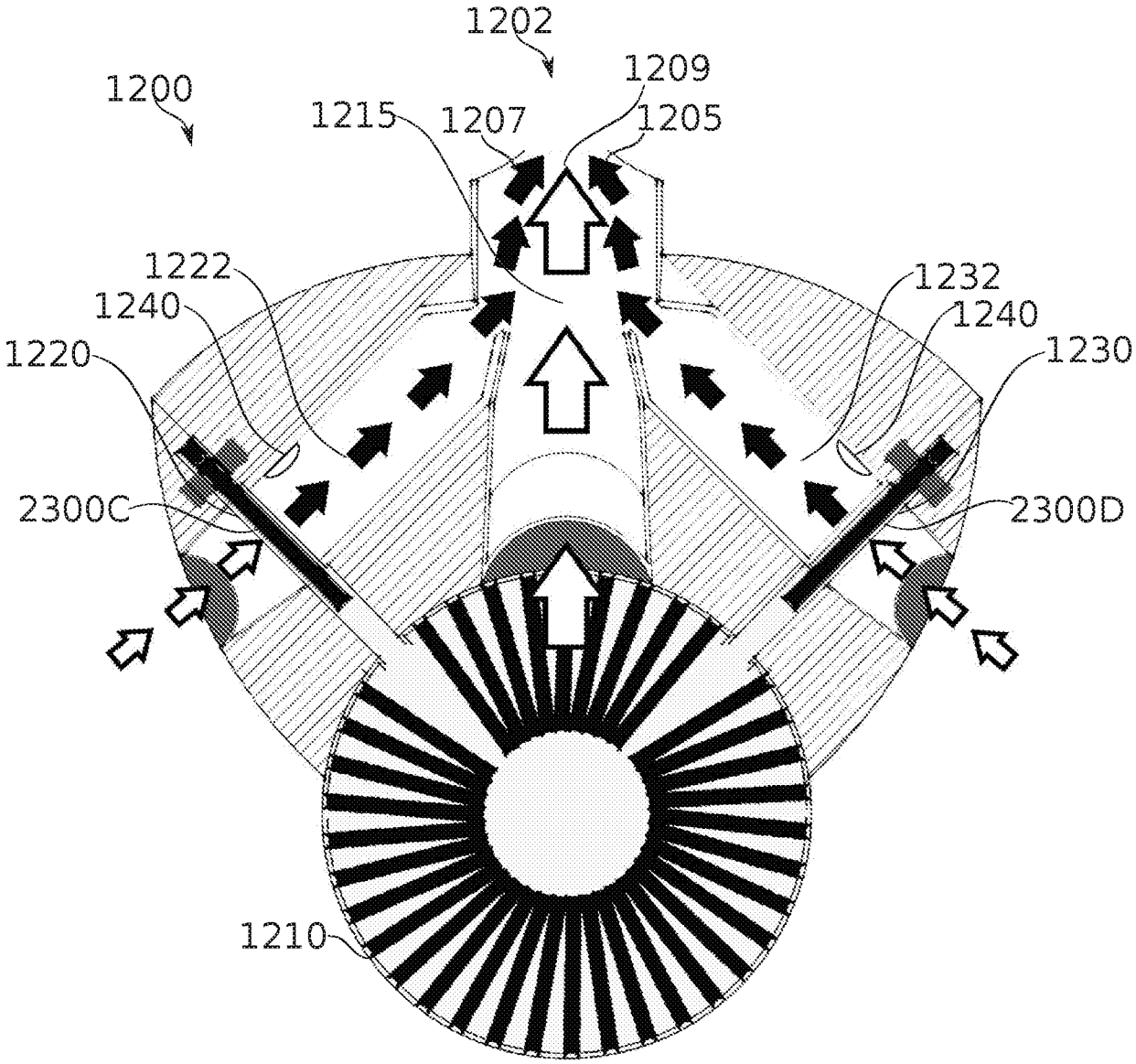
1202
1209
1200
1215
1207
1205
1222
1232
1240
1240
1220
1230
2300C
2300D
1210

FIG. 12

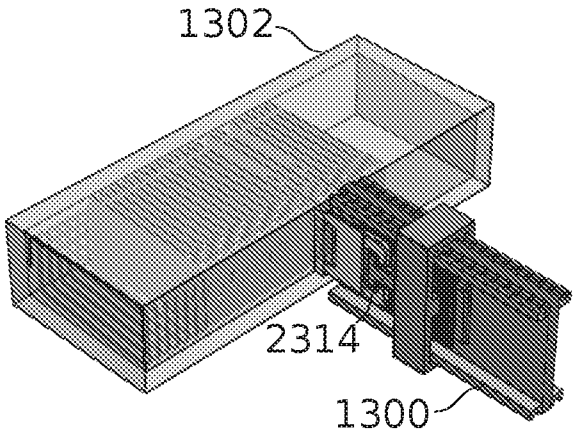

FIG. 13A

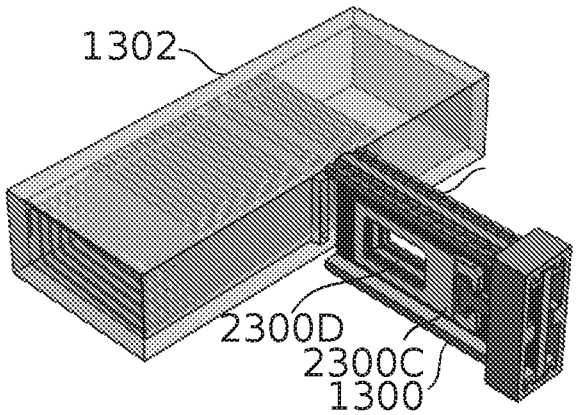

FIG. 13B

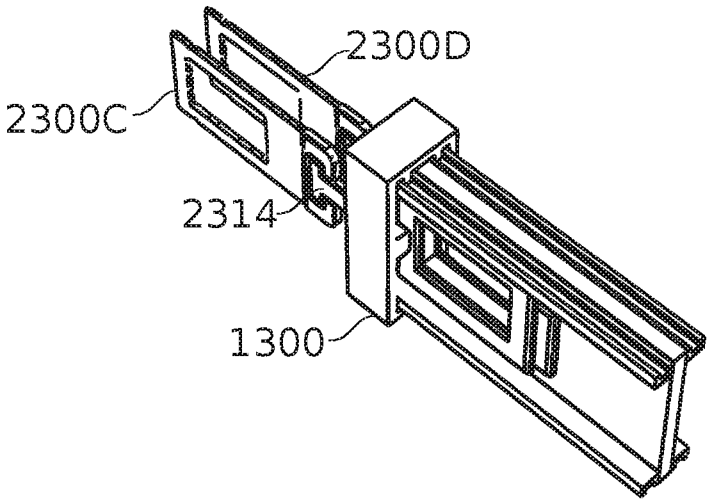

FIG. 13C

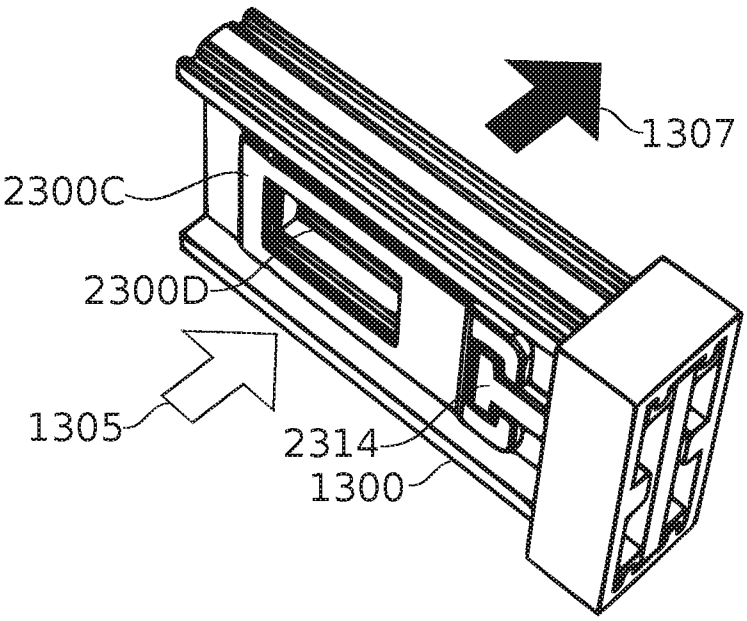

FIG. 13D

INTERNATIONAL SEARCH REPORT

International application No
PCT/IL2015/050677

A. CLASSIFICATION OF SUBJECT MATTER

INV. A61M11/04 A61M15/00
ADD. A24F47/00

According to International Patent Classification (IPC) or to both national classification and IPC

B. FIELDS SEARCHED

Minimum documentation searched (classification system followed by classification symbols)

A61M A24F

Documentation searched other than minimum documentation to the extent that such documents are included in the fields searched

Electronic data base consulted during the international search (name of data base and, where practicable, search terms used)

EPO-Internal, WPI Data

C. DOCUMENTS CONSIDERED TO BE RELEVANT

Category*	Citation of document, with indication, where appropriate, of the relevant passages	Relevant to claim No.
X	US 2007/102013 A1 (ADAMS JOHN M [US] ET AL) 10 May 2007 (2007-05-10)	1,3,5-7, 9,18-22, 26-41,50
Y	abstract; figures 11,12,13,14	13,14
A	paragraphs [0003], [0052] - [0054]	4,11,12, 15,16

X	WO 2013/057185 A1 (BATMARK LTD [GB]) 25 April 2013 (2013-04-25)	1,2,8, 10,17, 23-25, 29,30, 42,50
Y	abstract; figure 7	13,14
A	page 10, lines 3-30	4,11,12, 15,16

	-/--	

[X] Further documents are listed in the continuation of Box C.

[X] See patent family annex.

* Special categories of cited documents :

"A" document defining the general state of the art which is not considered to be of particular relevance

"E" earlier application or patent but published on or after the international filing date

"L" document which may throw doubts on priority claim(s) or which is cited to establish the publication date of another citation or other special reason (as specified)

"O" document referring to an oral disclosure, use, exhibition or other means

"P" document published prior to the international filing date but later than the priority date claimed

"T" later document published after the international filing date or priority date and not in conflict with the application but cited to understand the principle or theory underlying the invention

"X" document of particular relevance; the claimed invention cannot be considered novel or cannot be considered to involve an inventive step when the document is taken alone

"Y" document of particular relevance; the claimed invention cannot be considered to involve an inventive step when the document is combined with one or more other such documents, such combination being obvious to a person skilled in the art

"&" document member of the same patent family

Date of the actual completion of the international search	Date of mailing of the international search report
16 September 2015	03/12/2015

Name and mailing address of the ISA/	Authorized officer
European Patent Office, P.B. 5818 Patentlaan 2 NL - 2280 HV Rijswijk Tel. (+31-70) 340-2040, Fax: (+31-70) 340-3016	Moraru, Liviu

2

Form PCT/ISA/210 (second sheet) (April 2005)

INTERNATIONAL SEARCH REPORT

International application No
PCT/IL2015/050677

C(Continuation). DOCUMENTS CONSIDERED TO BE RELEVANT

Category*	Citation of document, with indication, where appropriate, of the relevant passages	Relevant to claim No.
X A	US 2013/081623 A1 (BUCHBERGER HELMUT [AT]) 4 April 2013 (2013-04-04) abstract; figure 7 paragraphs [0001], [0046], [0048] -----	1,29,30, 50 4,11,12, 15,16
X A	US 2013/333700 A1 (BUCHBERGER HELMUT [AT]) 19 December 2013 (2013-12-19) abstract; figures 7-8 paragraphs [0030], [0031] -----	1,29,30, 50 4,11,12, 15,16
Y	US 2005/063686 A1 (WHITTLE BRIAN ANTHONY [GB] ET AL) 24 March 2005 (2005-03-24) abstract; figure 5a paragraphs [0019], [0070] -----	13,14
A	GB 2 340 758 A (BESPAK PLC [GB]) 1 March 2000 (2000-03-01) the whole document -----	1

2

Form PCT/ISA/210 (continuation of second sheet) (April 2005)

INTERNATIONAL SEARCH REPORT

International application No.
PCT/IL2015/050677

Box No. II Observations where certain claims were found unsearchable (Continuation of item 2 of first sheet)

This international search report has not been established in respect of certain claims under Article 17(2)(a) for the following reasons:

1. ☐ Claims Nos.:
because they relate to subject matter not required to be searched by this Authority, namely:

2. ☐ Claims Nos.:
because they relate to parts of the international application that do not comply with the prescribed requirements to such an extent that no meaningful international search can be carried out, specifically:

3. ☐ Claims Nos.:
because they are dependent claims and are not drafted in accordance with the second and third sentences of Rule 6.4(a).

Box No. III Observations where unity of invention is lacking (Continuation of item 3 of first sheet)

This International Searching Authority found multiple inventions in this international application, as follows:

see additional sheet

1. ☐ As all required additional search fees were timely paid by the applicant, this international search report covers all searchable claims.

2. ☐ As all searchable claims could be searched without effort justifying an additional fees, this Authority did not invite payment of additional fees.

3. ☐ As only some of the required additional search fees were timely paid by the applicant, this international search report covers only those claims for which fees were paid, specifically claims Nos.:

4. ☒ No required additional search fees were timely paid by the applicant. Consequently, this international search report is restricted to the invention first mentioned in the claims; it is covered by claims Nos.:

1-42, 50

Remark on Protest

☐ The additional search fees were accompanied by the applicant's protest and, where applicable, the payment of a protest fee.

☐ The additional search fees were accompanied by the applicant's protest but the applicable protest fee was not paid within the time limit specified in the invitation.

☐ No protest accompanied the payment of additional search fees.

INTERNATIONAL SEARCH REPORT

Information on patent family members

International application No
PCT/IL2015/050677

Patent document cited in search report		Publication date	Patent family member(s)			Publication date
US 2007102013	A1	10-05-2007	AT	490699	T	15-12-2010
			AU	2006300818	A1	19-04-2007
			BR	PI0616628	A2	28-06-2011
			CA	2622481	A1	19-04-2007
			CN	101277623	A	01-10-2008
			CY	1111127	T1	11-06-2015
			DK	1942754	T3	14-03-2011
			EA	200800994	A1	29-08-2008
			EP	1942754	A2	16-07-2008
			HK	1115010	A1	21-04-2011
			JP	5075829	B2	21-11-2012
			JP	2009509523	A	12-03-2009
			KR	20080059227	A	26-06-2008
			MY	149252	A	31-07-2013
			PT	1942754	E	05-01-2011
			SI	1942754	T1	28-02-2011
			US	2007102013	A1	10-05-2007
			WO	2007042941	A2	19-04-2007
WO 2013057185	A1	25-04-2013	AR	088464	A1	11-06-2014
			AT	511344	A4	15-11-2012
			CN	103987285	A	13-08-2014
			EP	2768327	A1	27-08-2014
			TW	201338718	A	01-10-2013
			US	2014286630	A1	25-09-2014
			US	2015114411	A1	30-04-2015
			WO	2013057185	A1	25-04-2013
US 2013081623	A1	04-04-2013	AT	509046	A4	15-06-2011
			CN	102883766	A	16-01-2013
			EP	2544743	A1	16-01-2013
			ES	2458427	T3	05-05-2014
			JP	2013521075	A	10-06-2013
			US	2013081623	A1	04-04-2013
			WO	2011109849	A1	15-09-2011
US 2013333700	A1	19-12-2013	AU	2012214085	A1	16-08-2012
			CA	2824970	A1	16-08-2012
			CN	103491815	A	01-01-2014
			EP	2672847	A1	18-12-2013
			ES	2543312	T3	18-08-2015
			JP	5681819	B2	11-03-2015
			JP	2014511175	A	15-05-2014
			US	2013333700	A1	19-12-2013
			US	2014238396	A1	28-08-2014
			WO	2012106739	A1	16-08-2012
US 2005063686	A1	24-03-2005	AU	2002343001	A1	12-05-2003
			EP	1439876	A2	28-07-2004
			GB	2383123	A	18-06-2003
			US	2005063686	A1	24-03-2005
			WO	03037412	A2	08-05-2003
GB 2340758	A	01-03-2000	NONE			

FURTHER INFORMATION CONTINUED FROM PCT/ISA/ 210

This International Searching Authority found multiple (groups of) inventions in this international application, as follows:

1. claims: 1-42, 50

   A dose cartridge for an inhaler device, the dose cartridge comprising a flat pallet of airflow-permeable material including a heat-vaporizing drug substance, the pallet having two opposing faces and being positioned in the dose cartridge so as to expose the two faces to airflow, a supporting member coupled to the pallet to support the pallet from at least one side of the pallet joining the two faces; and an electrically resistive heating element extending at least partially across at least one of the two opposing faces from an attachment with the supporting member.

   ---

2. claims: 43-45

   A clamping chamber for an inhaler dose cartridge for pulmonary delivery of a heat-vaporizing drug substance to a user comprising a cartridge transport configured to move the inhaler dose cartridge from a storage position into a use position; a holder for holding a dose cartridge such that a heat-vaporizing drug substance is in sealed alignment with an air conduit of said clamping chamber; and electrodes positioned to be in electrical contact with at least two electrical contact receiving regions of an electrically resistive heating element of an inhaler dose cartridge in the clamping chamber.

   ---

3. claims: 46, 47

   A dose cartridge dispenser comprising a plurality of dose cartridges within a closed container, and including an interlock which, after dispensing of a first dose cartridge from the container, prevents dispensing of a second dose cartridge from the container until the first dose cartridge is returned to the dispenser.

   ---

4. claims: 48, 49

   A vaporizer device, comprising a compartment sized to fittingly receive a dose cartridge from a dose cartridge container while the vaporizer device is fitted to the dose cartridge container, and a power unit operable, while the vaporizer device is removed from the dose cartridge container, to deliver current to a heating element of the fittingly received dose cartridge, for volatilization of a volatilizing substance contained by the dose cartridge.