US 20190002004A1

(19) United States

(12) Patent Application Publication

BRUNNER

(10) Pub. No.: US 2019/0002004 A1

(43) Pub. Date: Jan. 3, 2019

(54) **CONTAINER ASSEMBLY**

(71) Applicant: **KETER PLASTIC LTD.**, Herzelyia (IL)

(72) Inventor: **Yaron BRUNNER**, Kibbutz Gvat (IL)

(73) Assignee: **KETER PLASTIC LTD.**, Herzelyia (IL)

(21) Appl. No.: **15/781,658**

(22) PCT Filed: **Dec. 8, 2016**

(86) PCT No.: **PCT/IL2016/051315**

§ 371 (c)(1),
(2) Date: **Jun. 5, 2018**

Related U.S. Application Data

(60) Provisional application No. 62/265,507, filed on Dec. 10, 2015, provisional application No. 62/302,235, filed on Mar. 2, 2016.

Publication Classification

(51) **Int. Cl.**

B62B 1/00	(2006.01)
B65D 21/02	(2006.01)
B62B 1/20	(2006.01)
B62B 5/06	(2006.01)
B25H 3/02	(2006.01)

(52) **U.S. Cl.**

CPC ***B62B 1/006*** (2013.01); ***B65D 21/0212*** (2013.01); ***B62B 1/20*** (2013.01); *B62B 2202/48* (2013.01); ***B25H 3/02*** (2013.01); ***B25H 3/023*** (2013.01); ***B62B 5/067*** (2013.01)

(57) **ABSTRACT**

Provided are container assemblies, including at least two containers detachably attached to one another by locking arrangements.

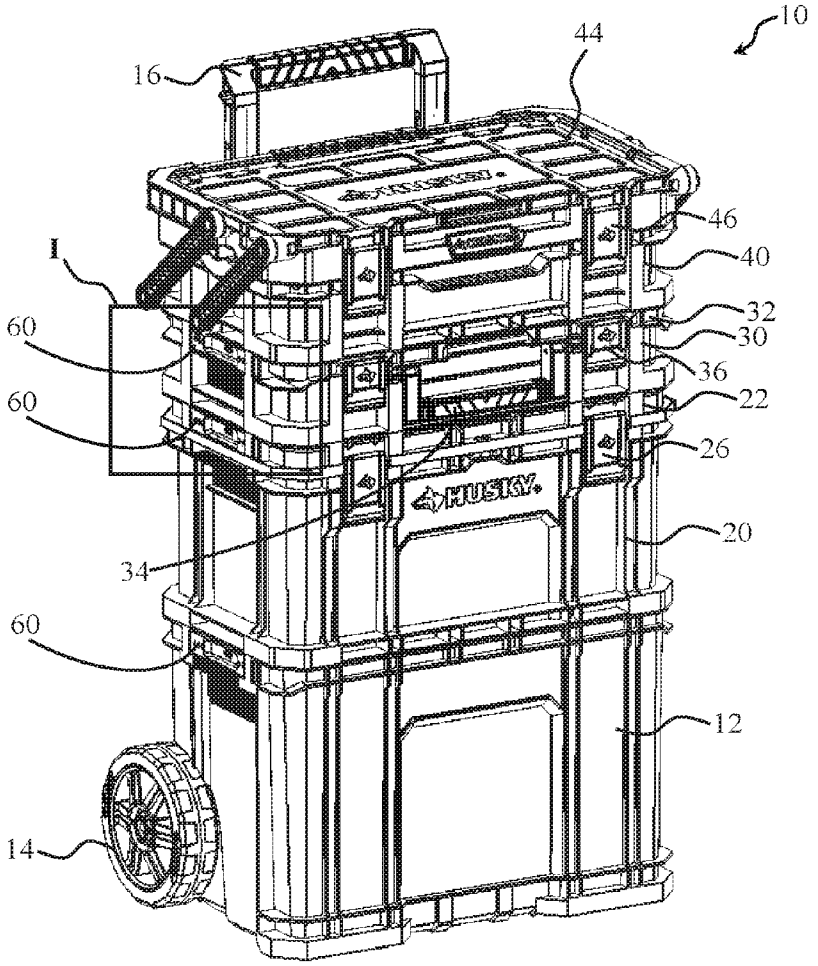

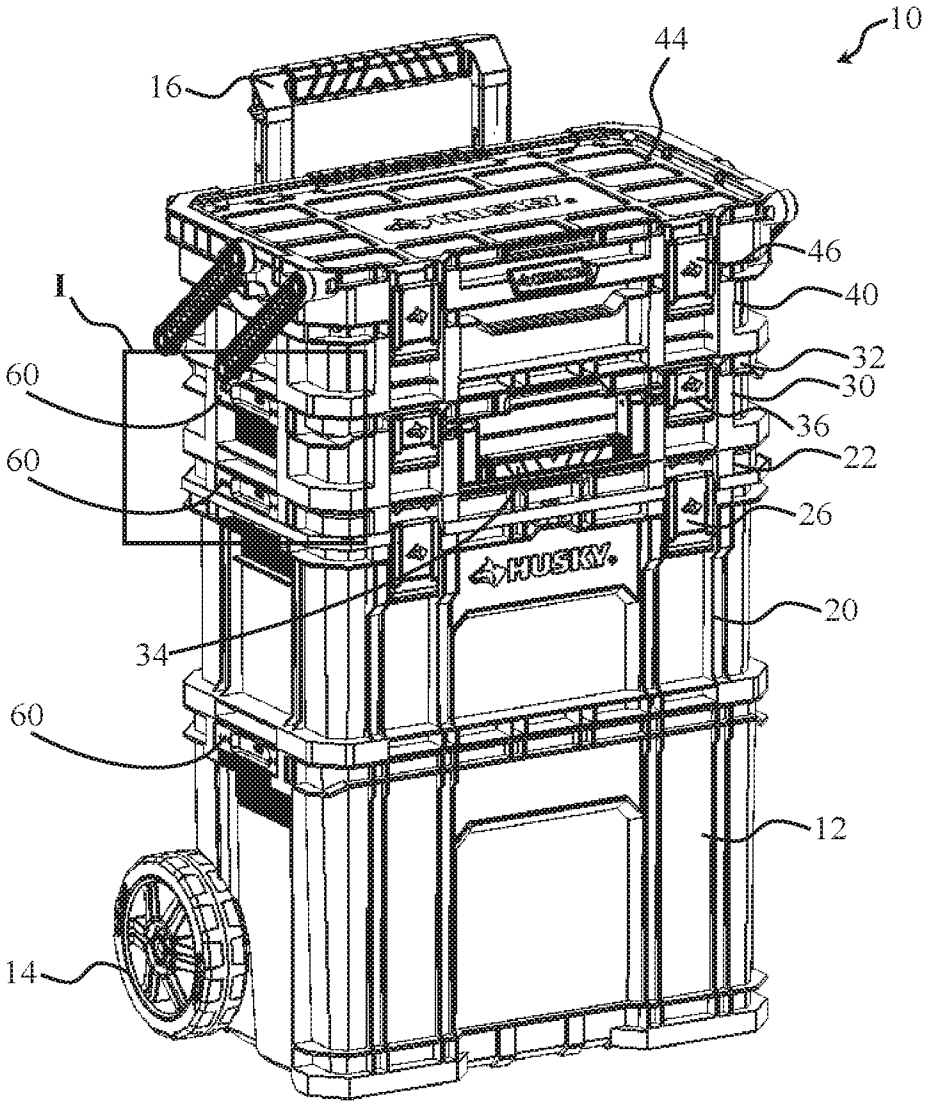

Fig. 1A

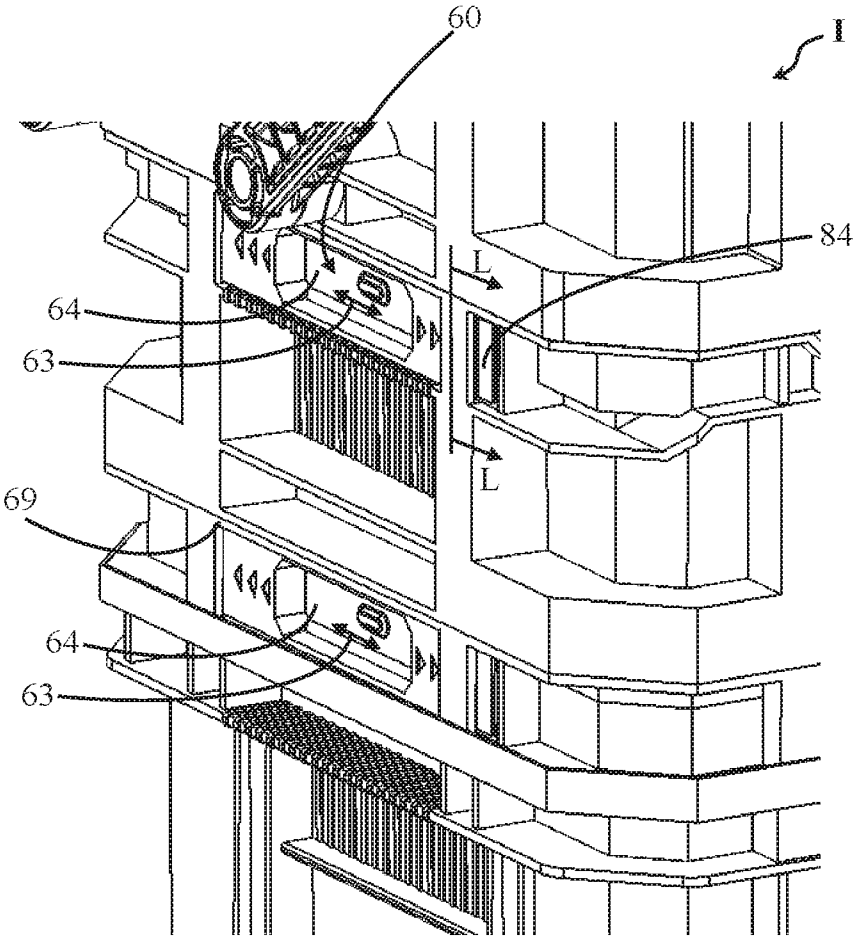

Fig. 1B

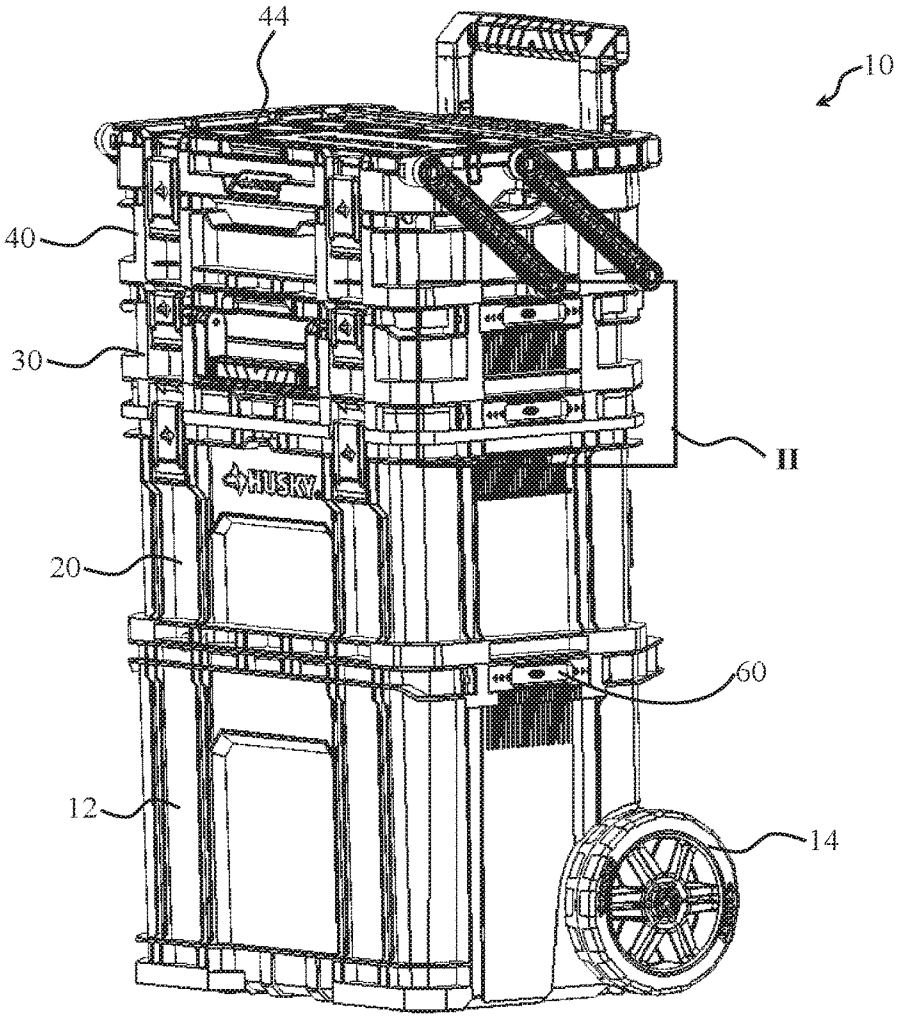

Fig. 2A

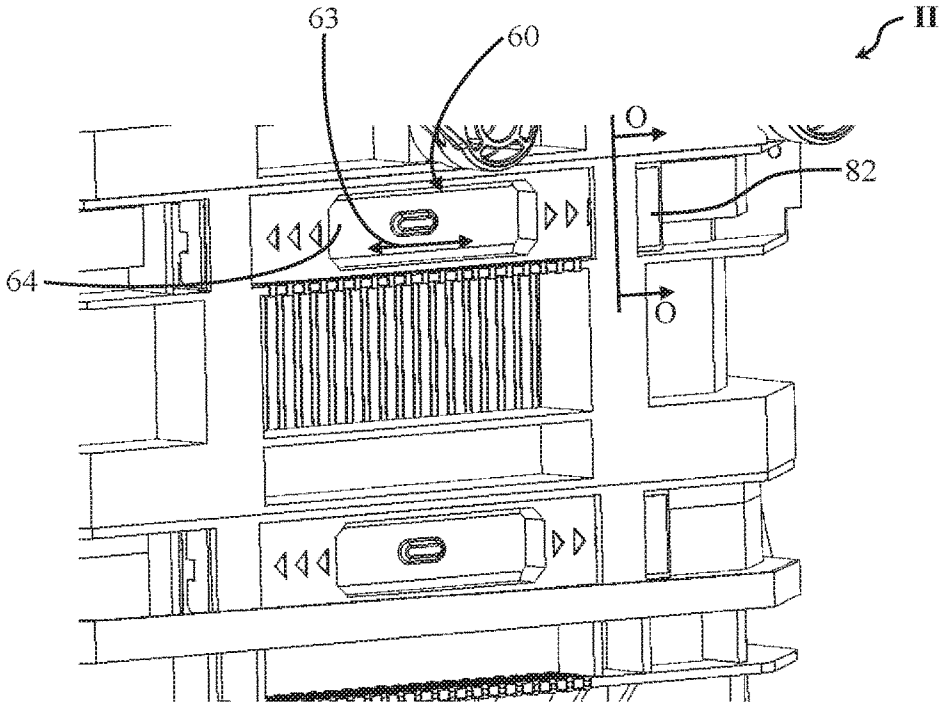

Fig. 2B

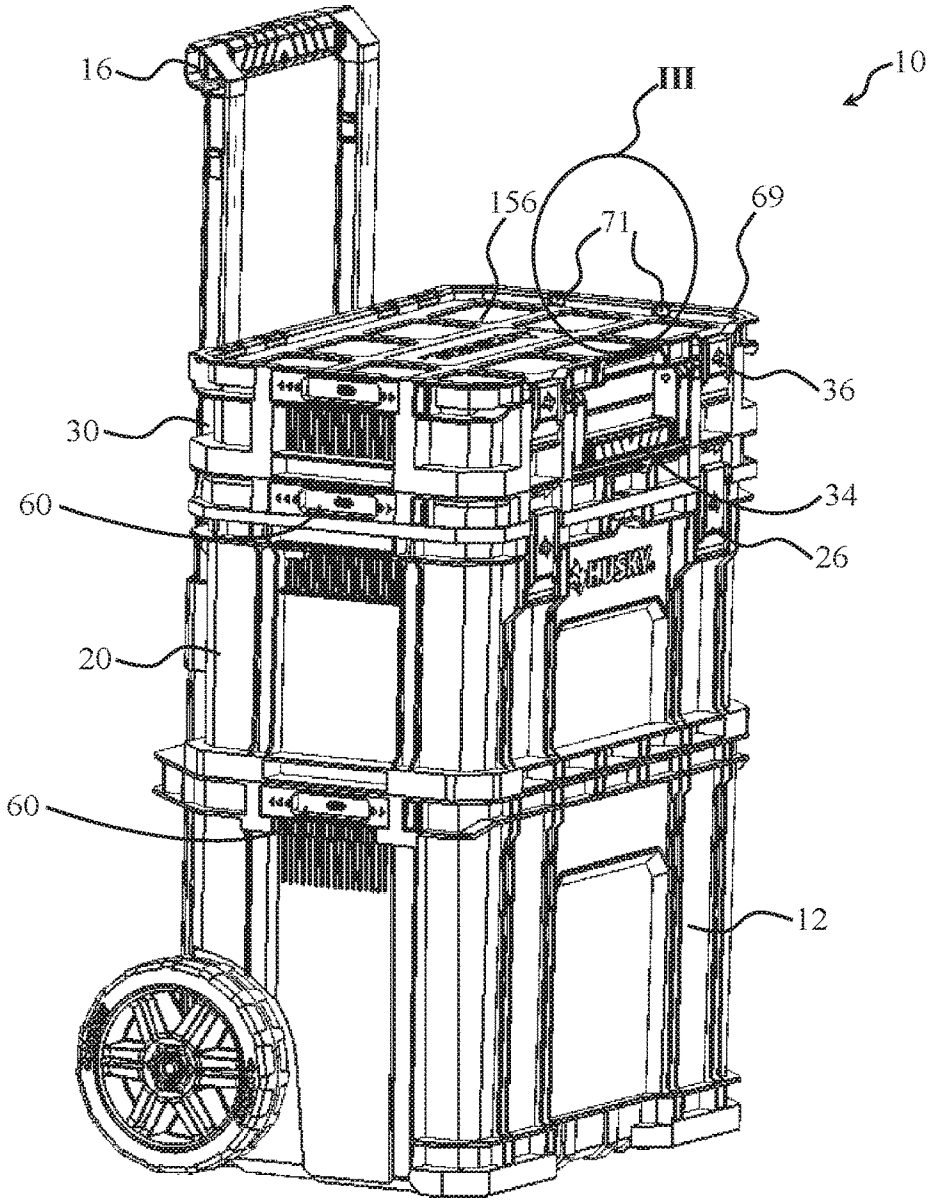

Fig. 3

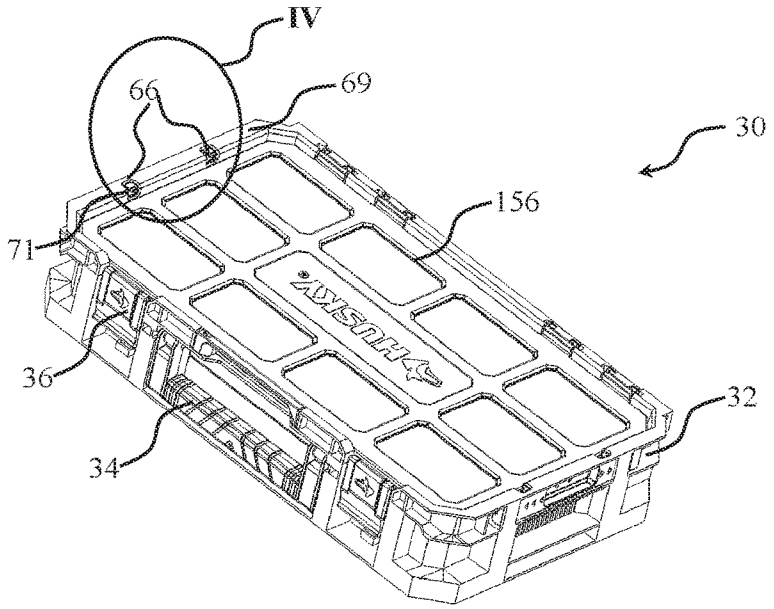

Fig. 4A

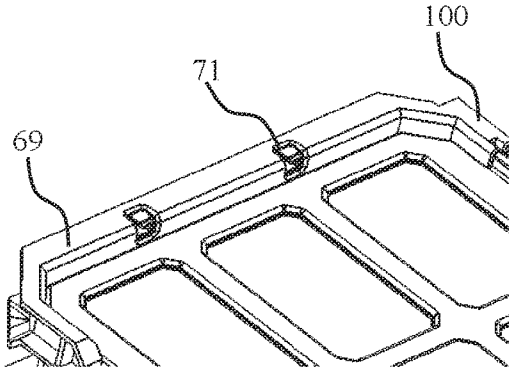

Fig. 4B

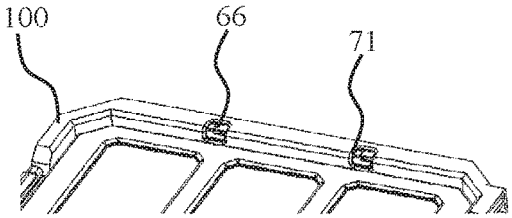

Fig. 4C

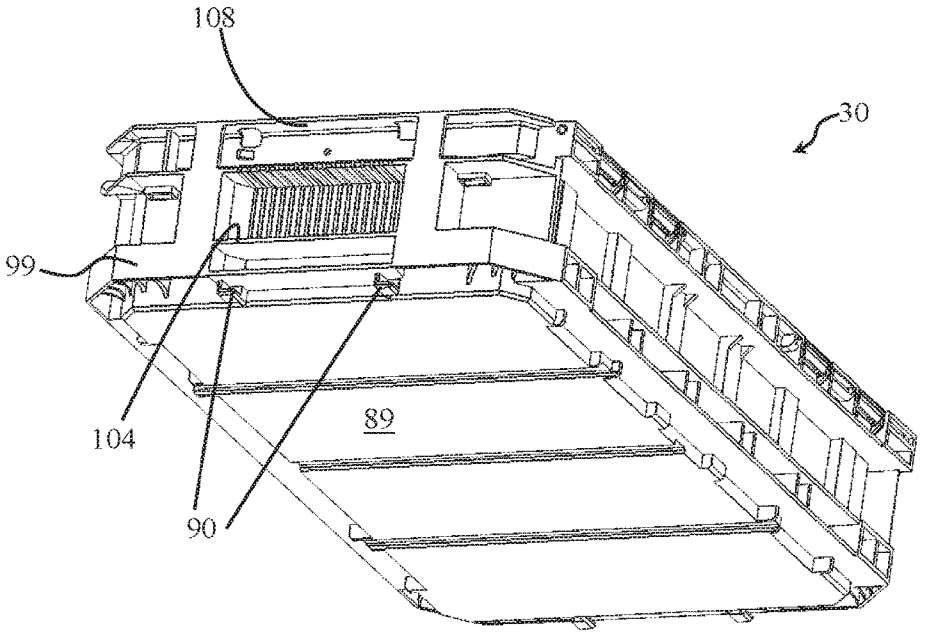

Fig. 5A

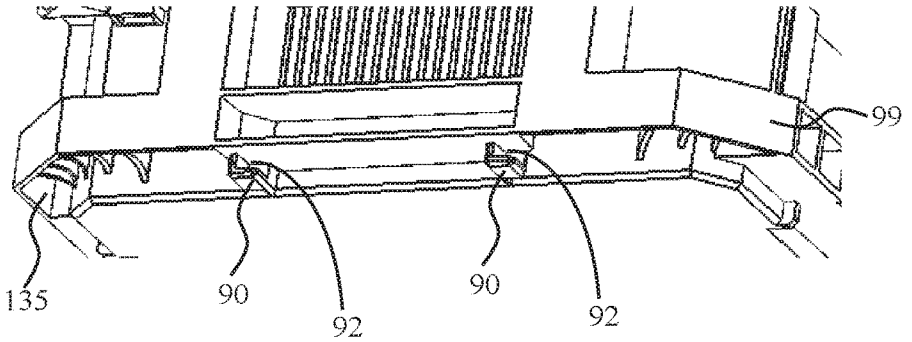

Fig. 5B

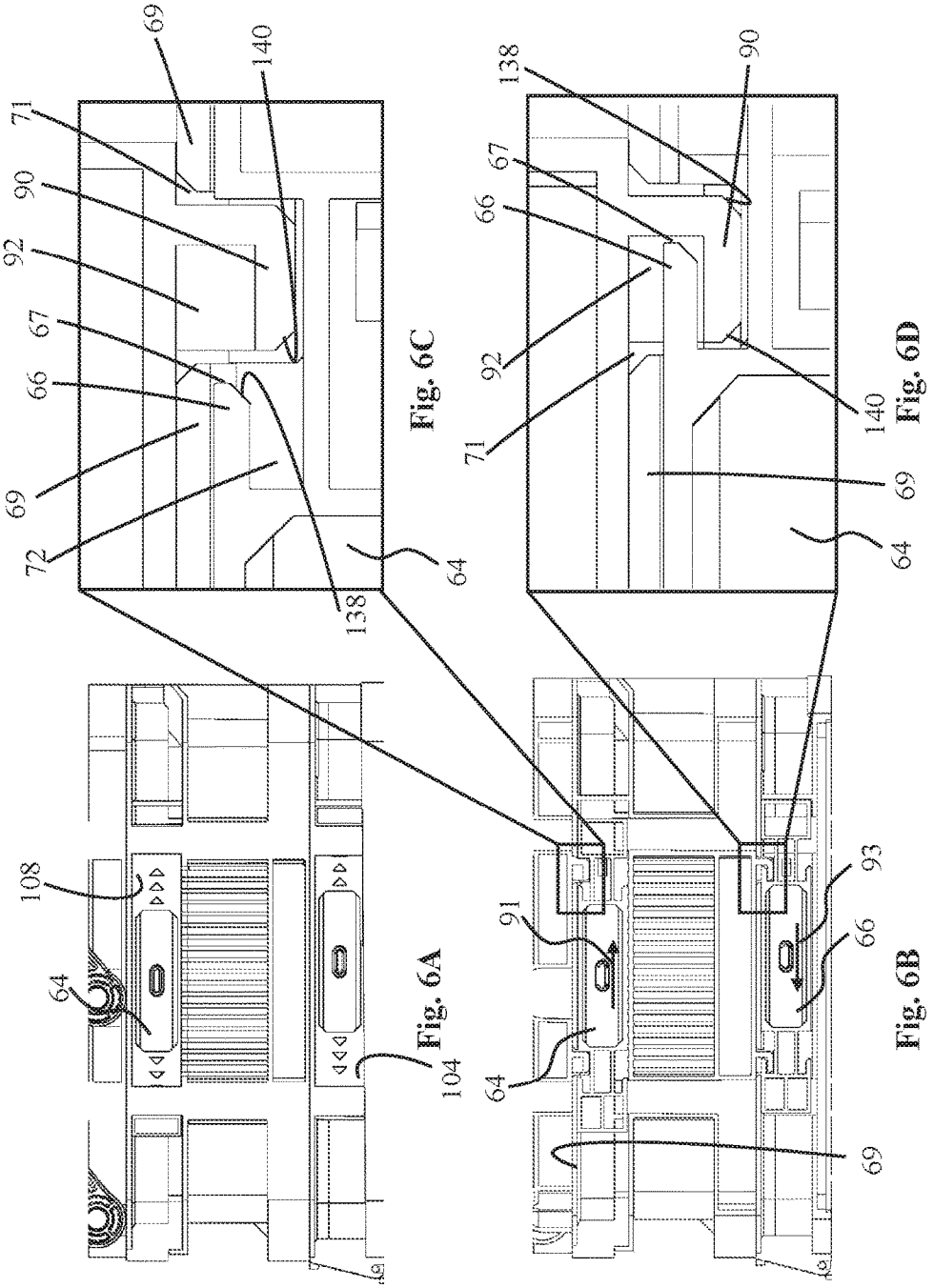
69
71
90
92
67
66
69
72
140
138
64
Fig. 6C
138
90
67
66
92
71
140
69
64
Fig. 6D
108
64
104
Fig. 6A
91
64
93
66
69
Fig. 6B

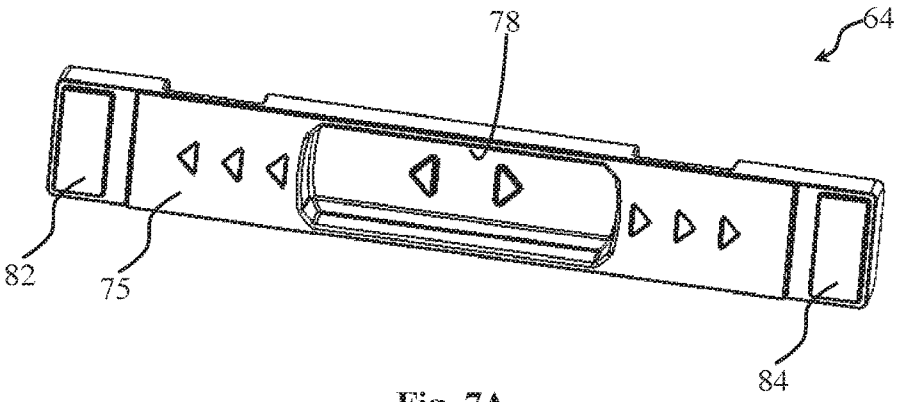

Fig. 7A

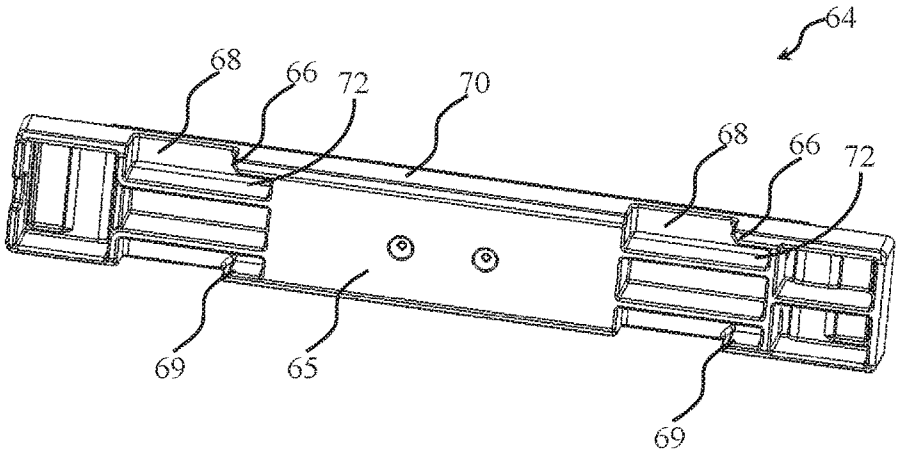

Fig. 7B

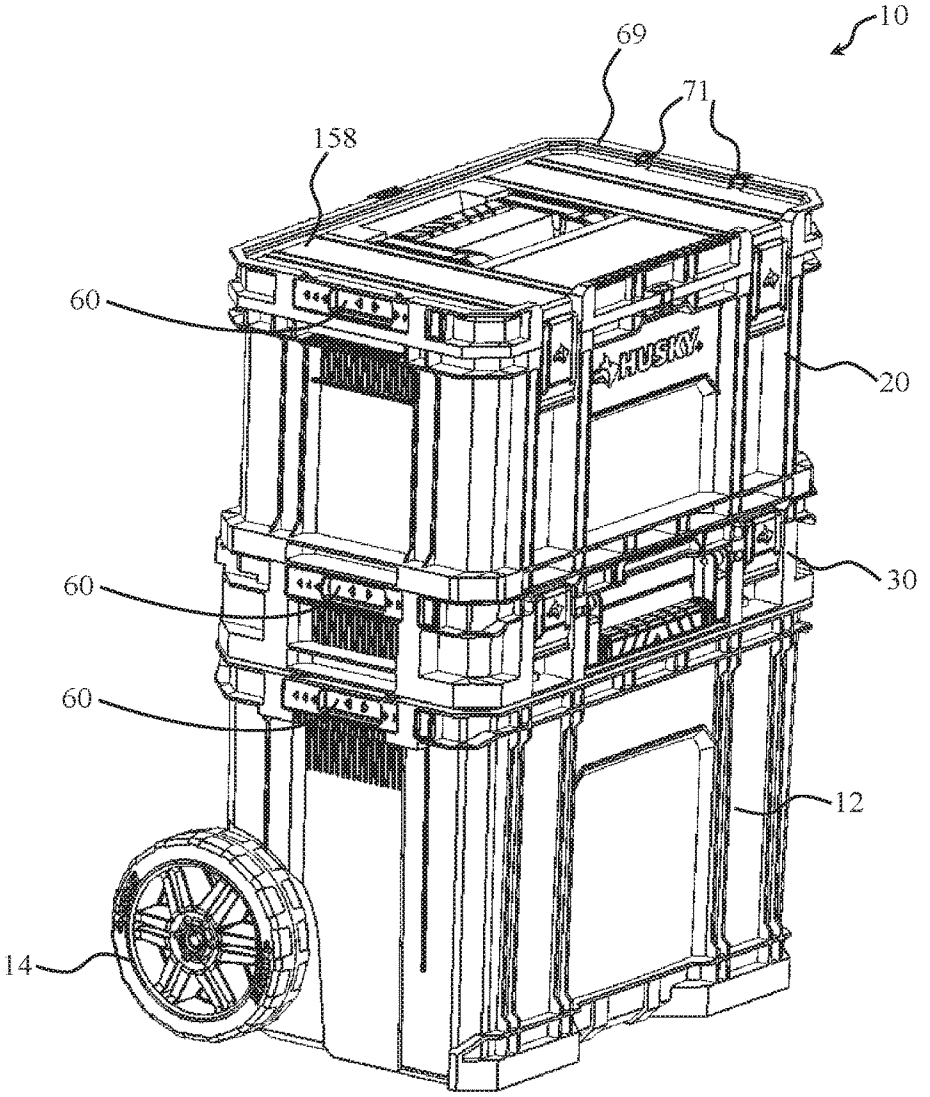

Fig. 8A

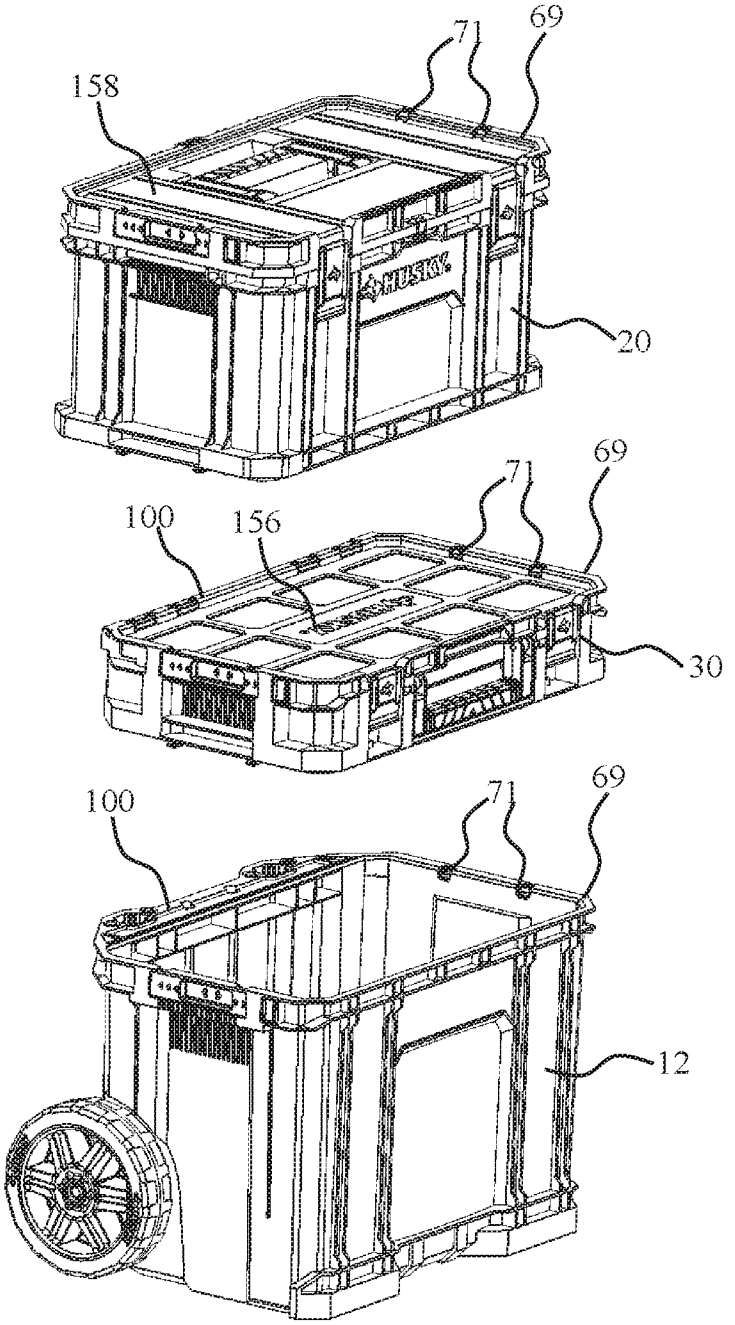

Fig. 8B

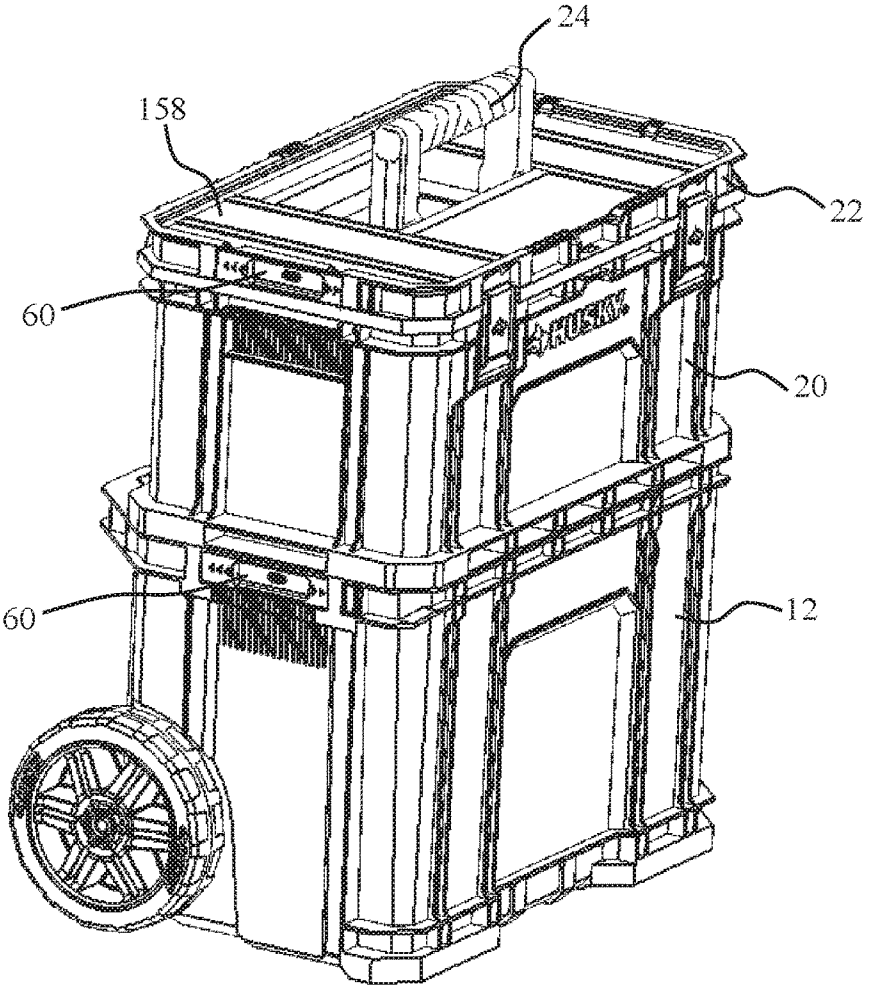

Fig. 8C

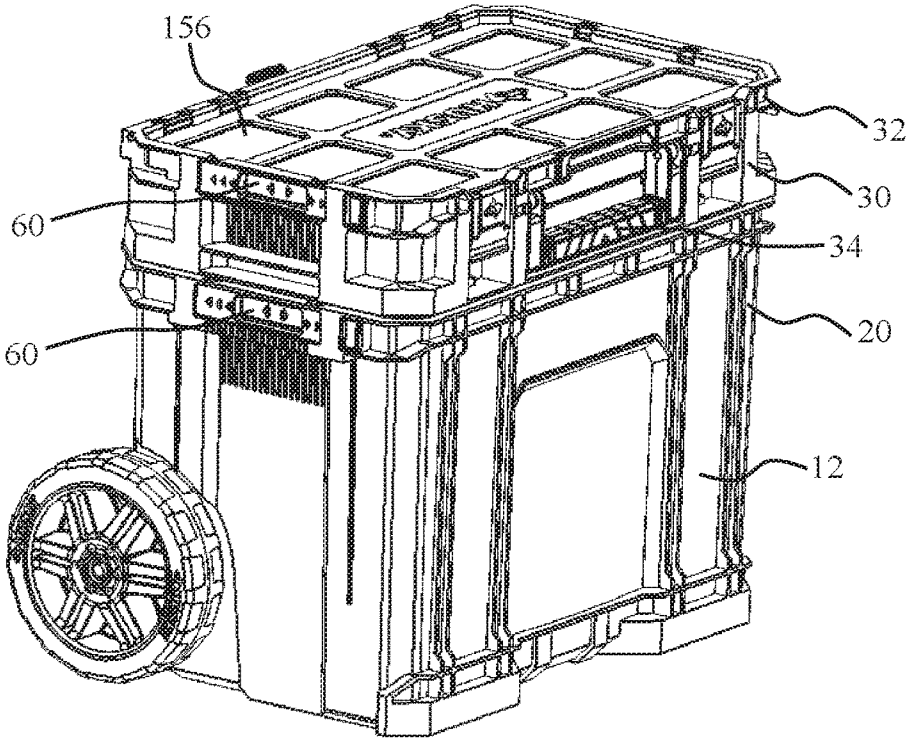

Fig. 8D

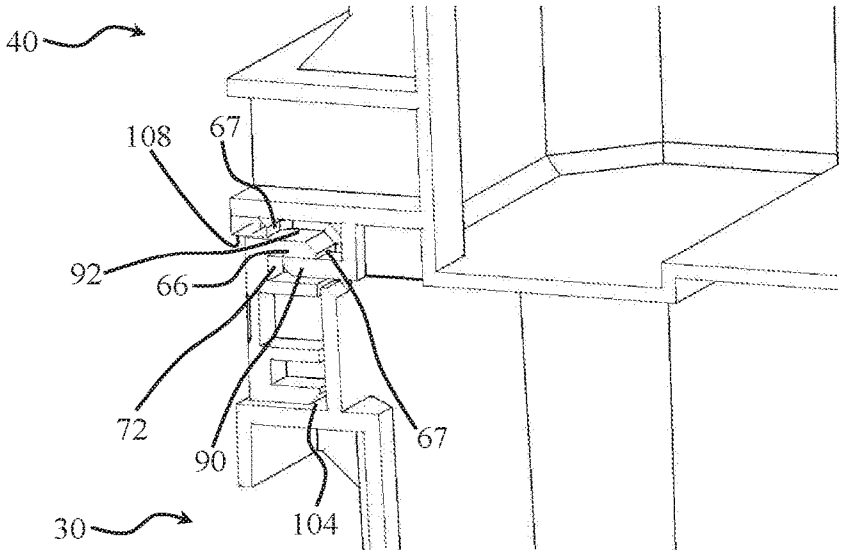

Fig. 9A

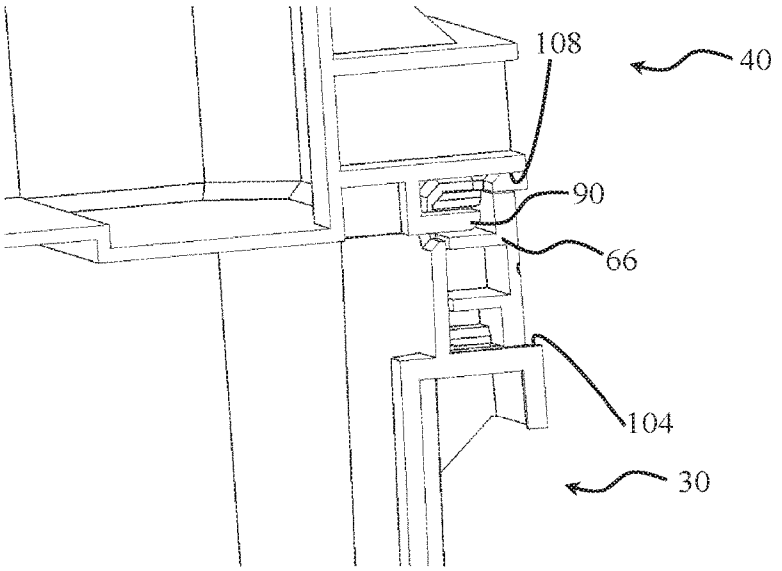

Fig. 9B

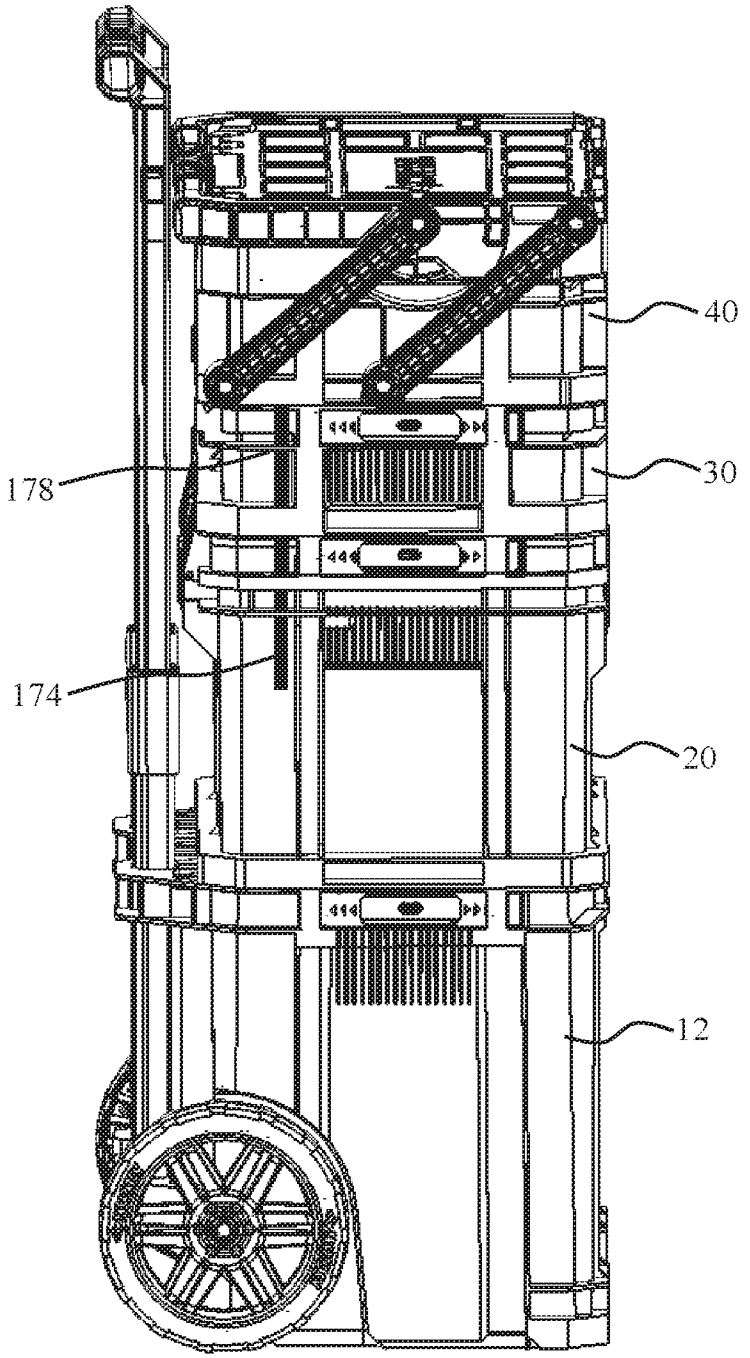

Fig. 10

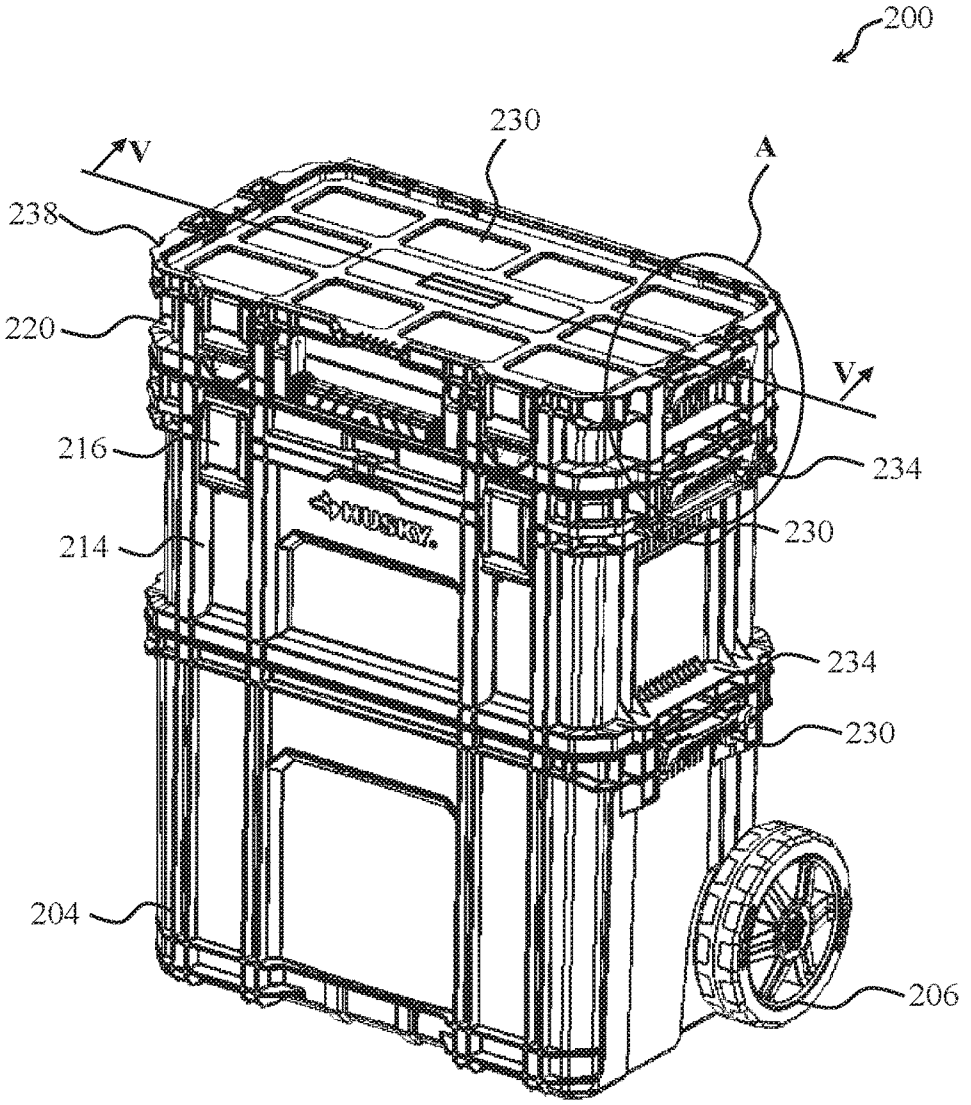

Fig. 11A

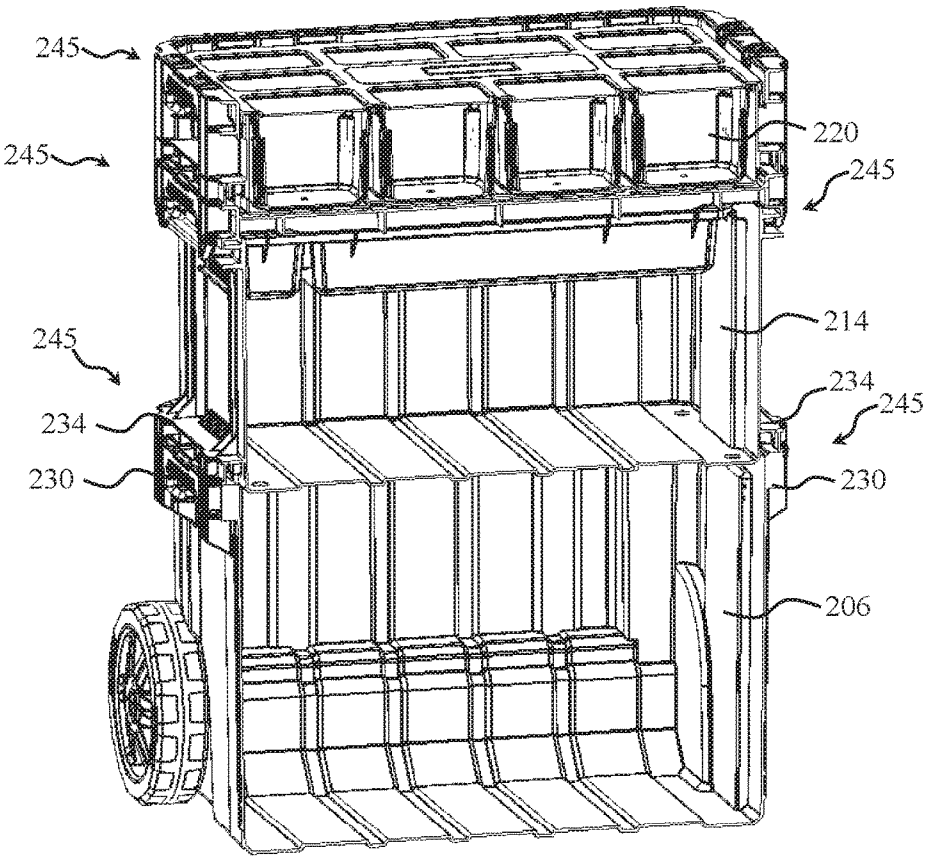

Fig. 11B

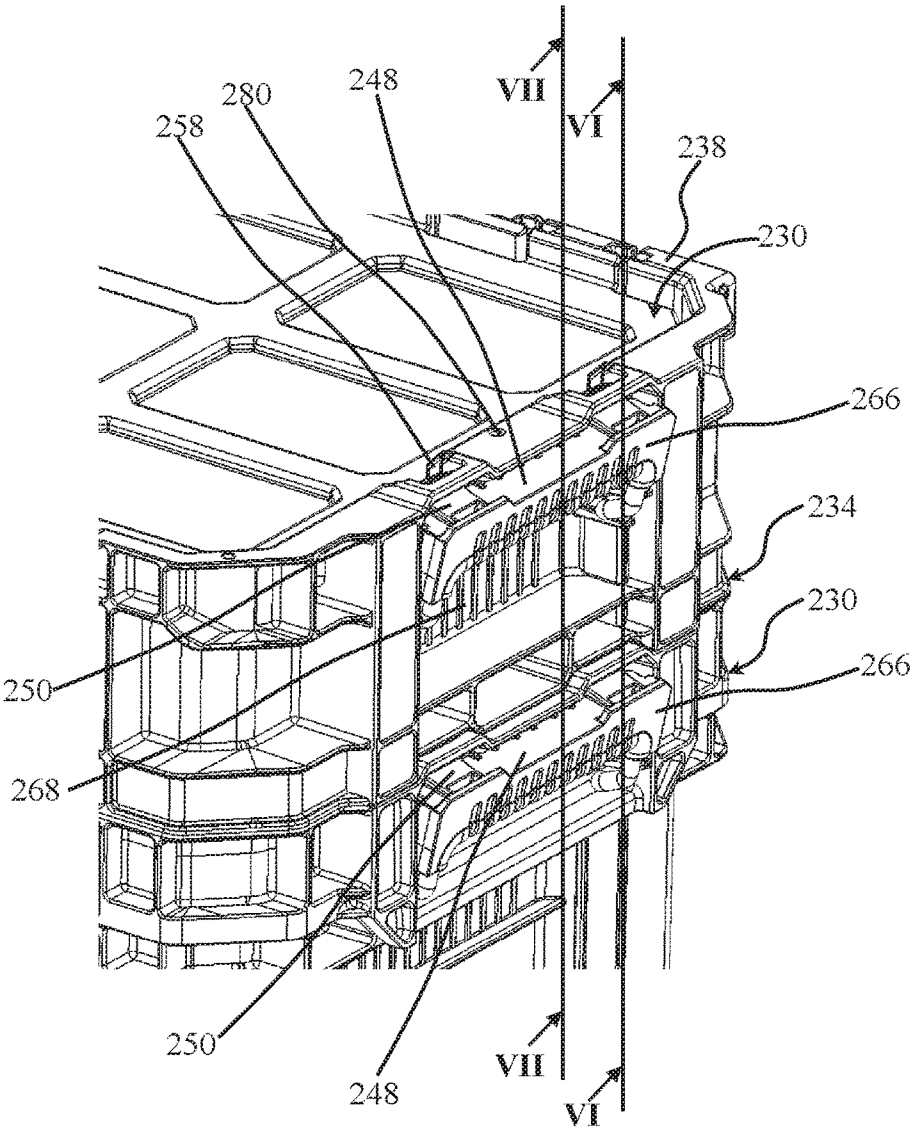

Fig. 11C

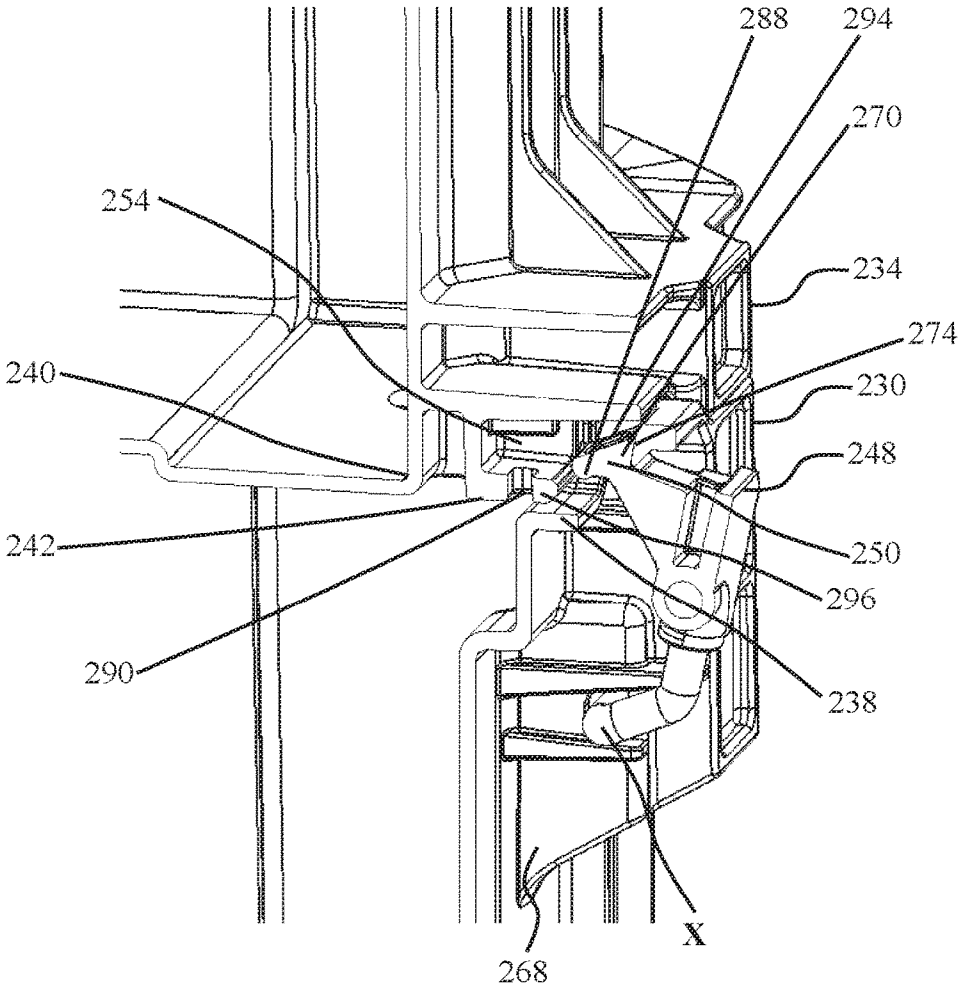

Fig. 11D

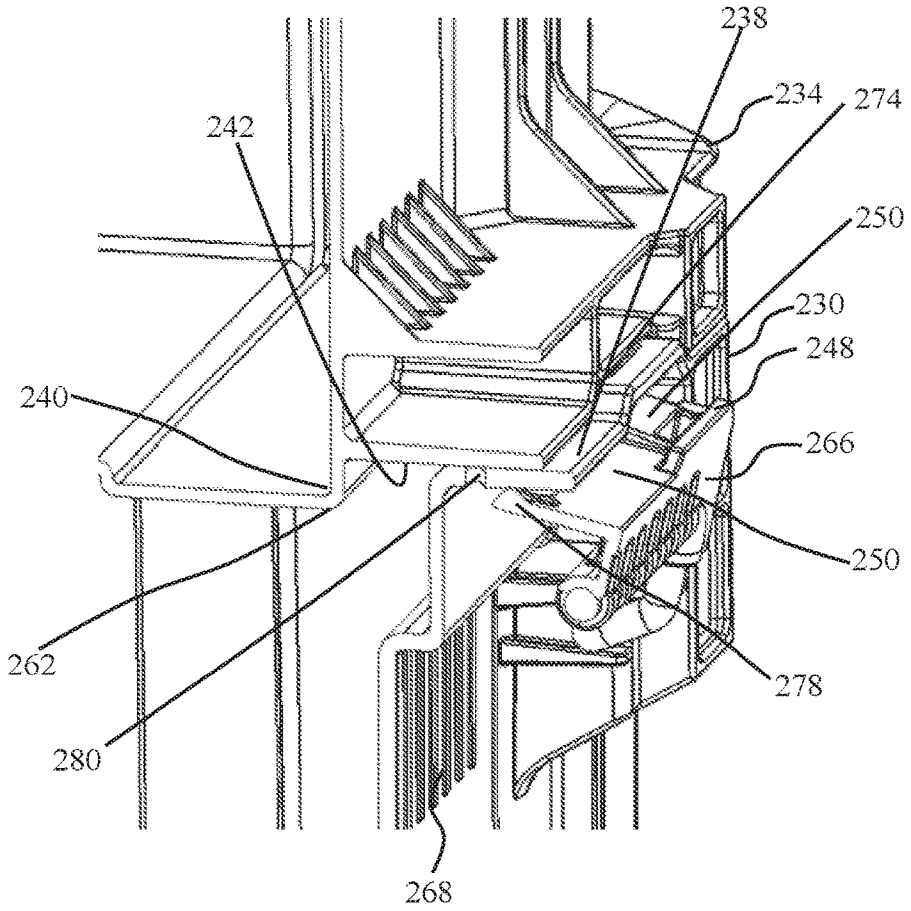

Fig. 11E

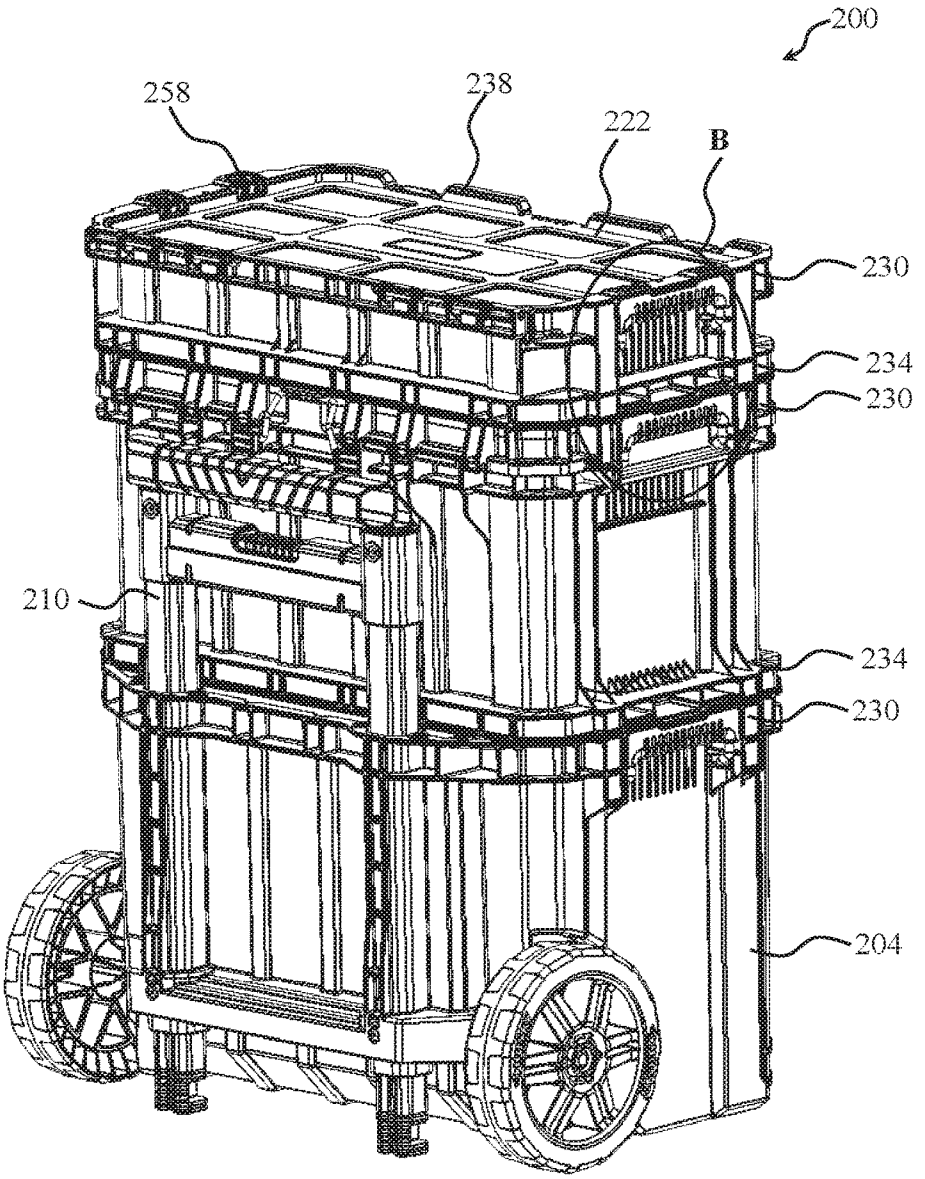

Fig. 12A

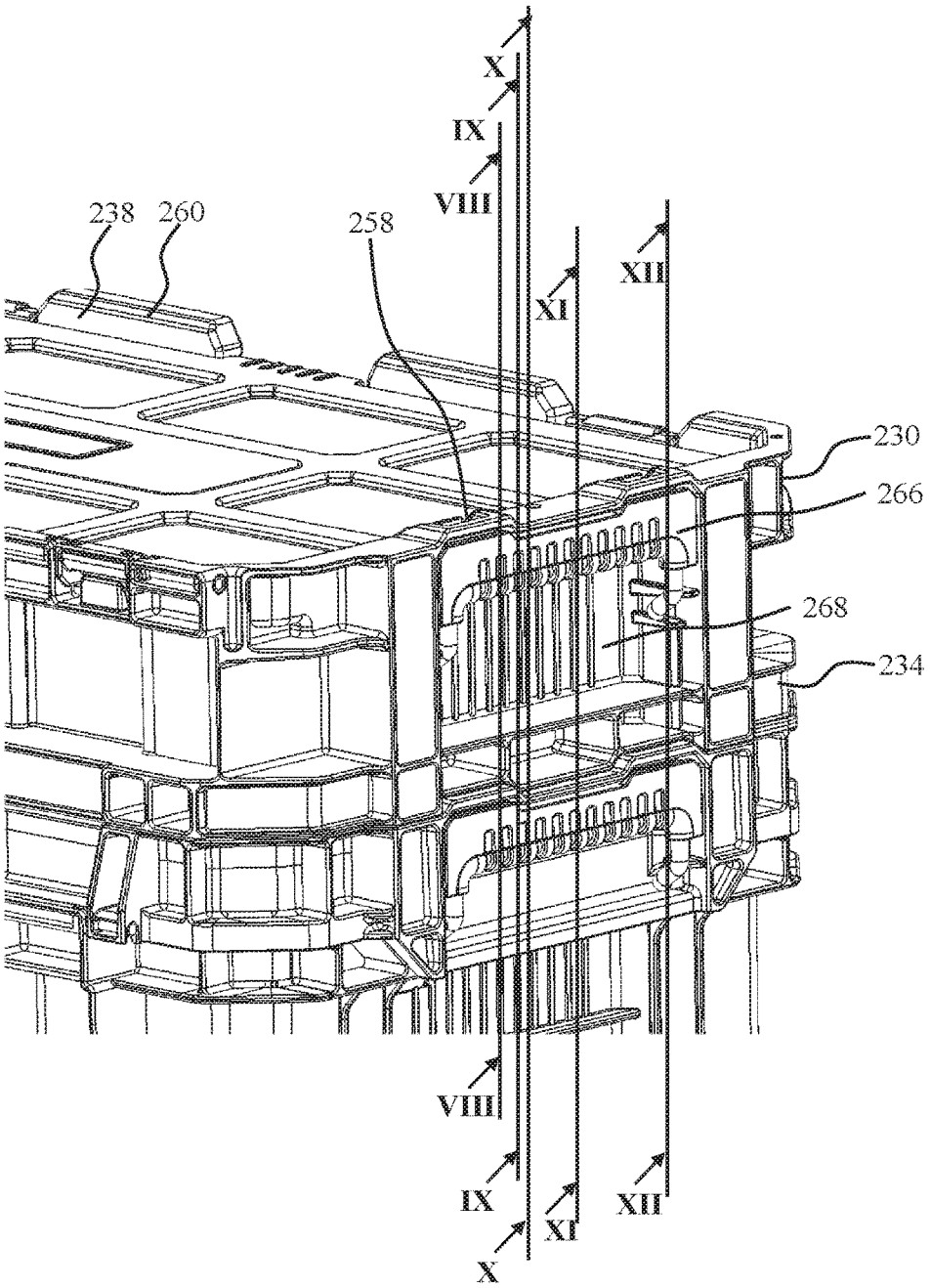

Fig. 12B

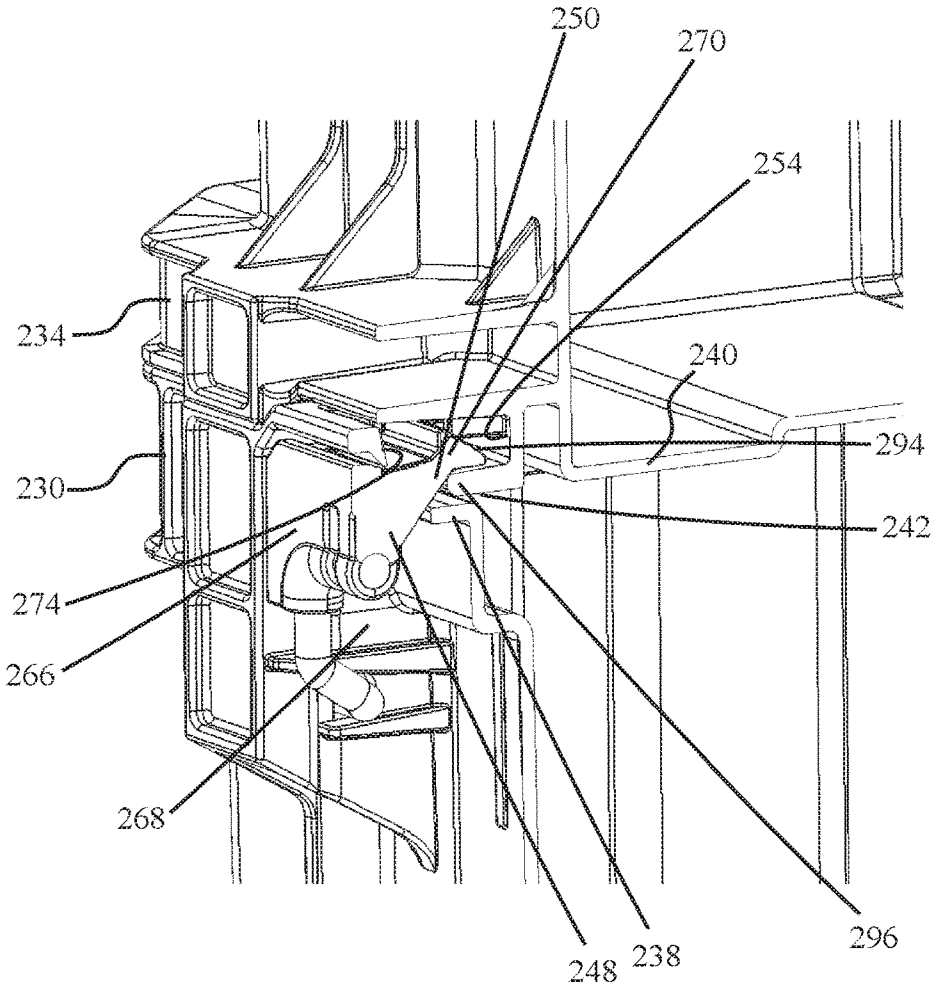

Fig. 13A

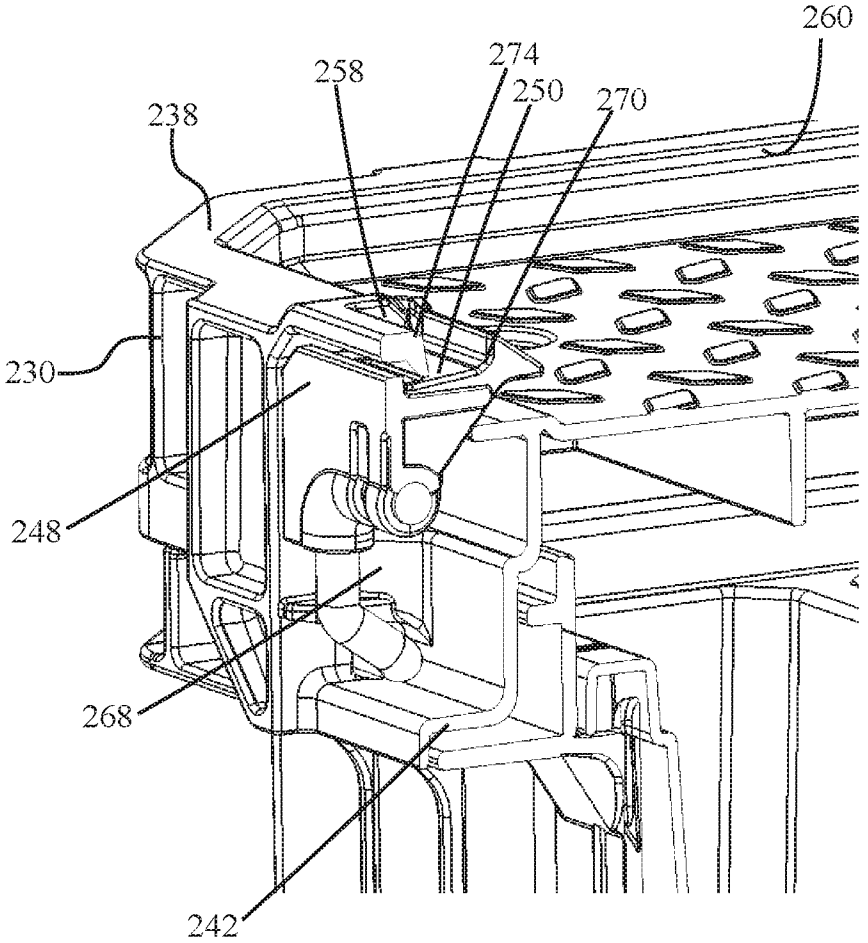

Fig. 13B

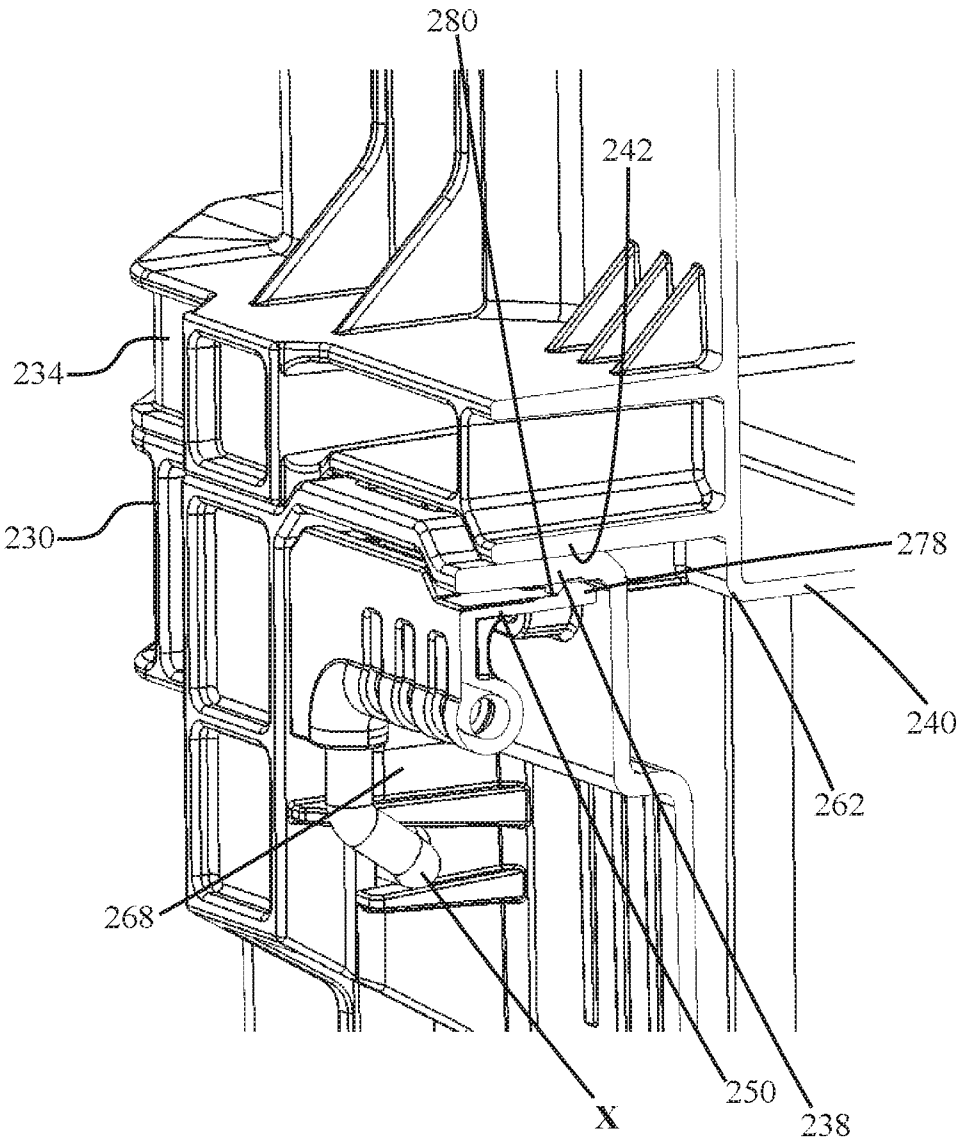

Fig. 13C

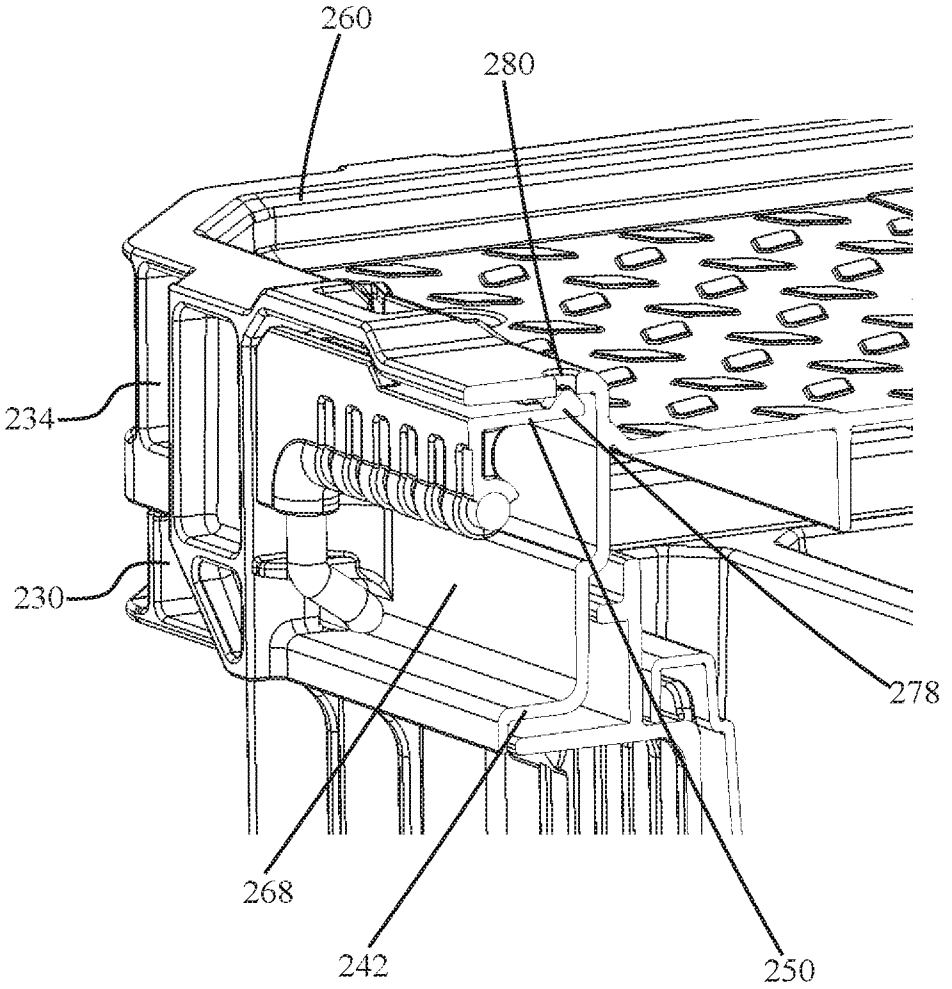

Fig. 13D

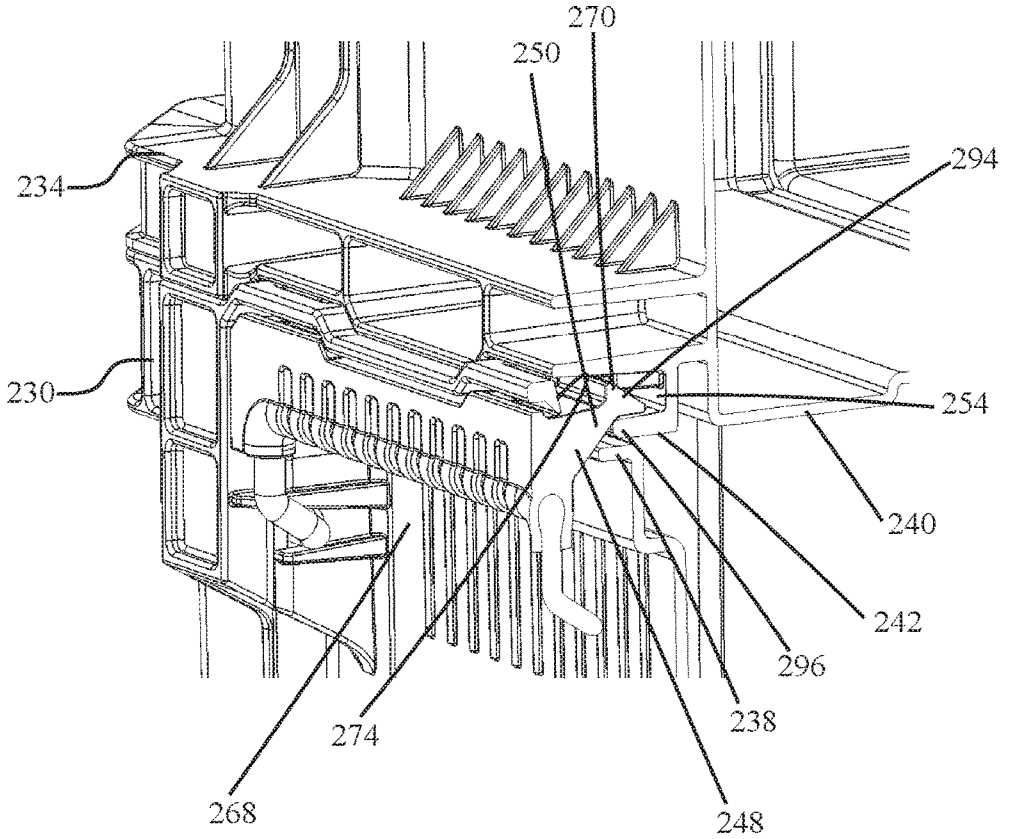

Fig. 13E

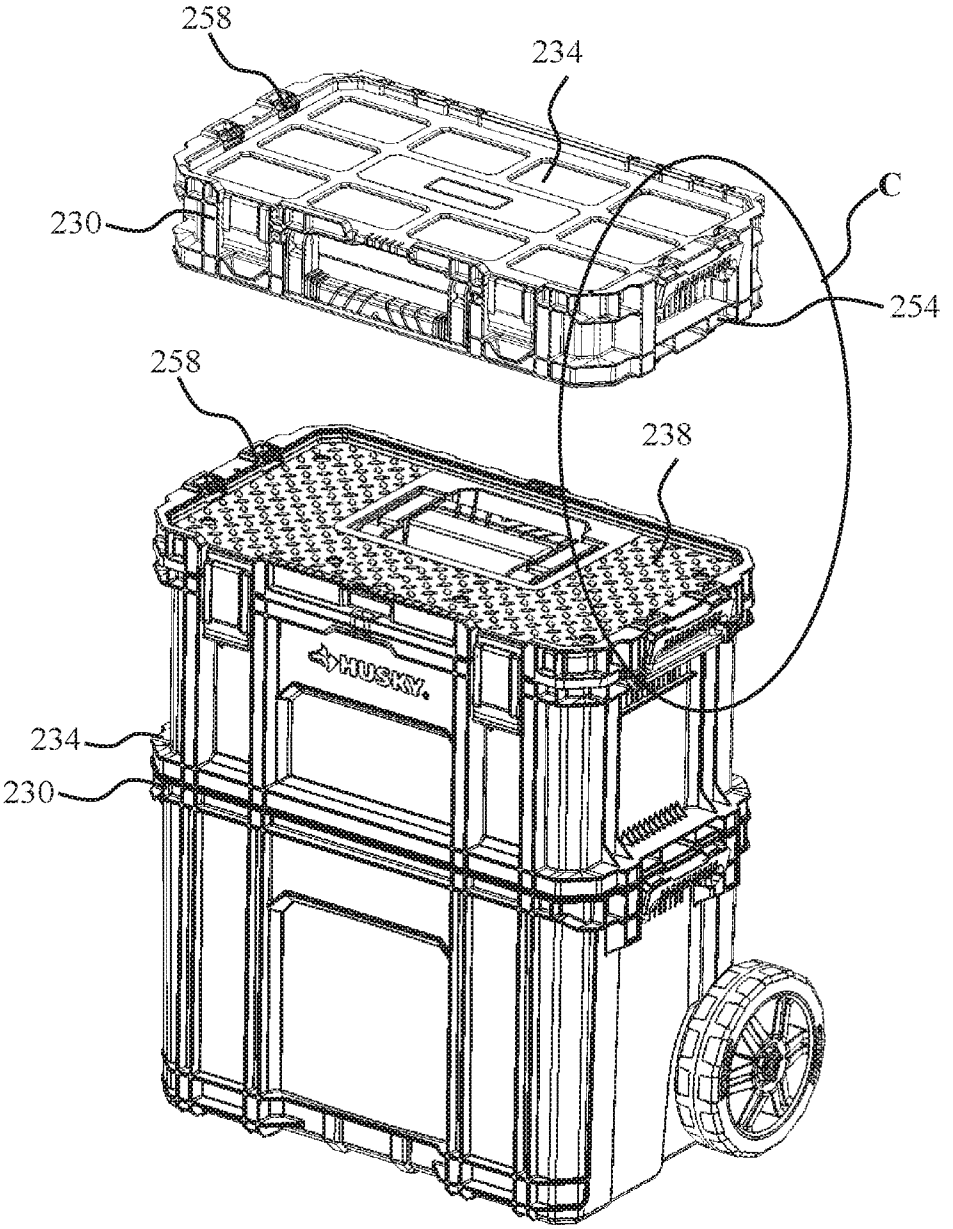

Fig. 14

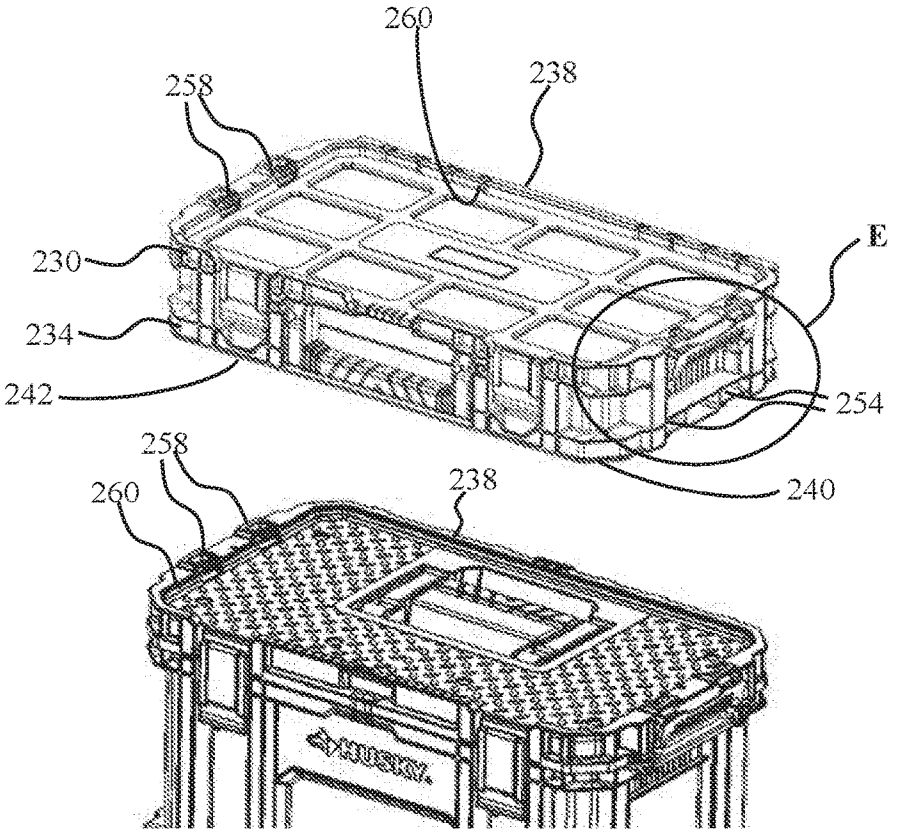

Fig. 15A

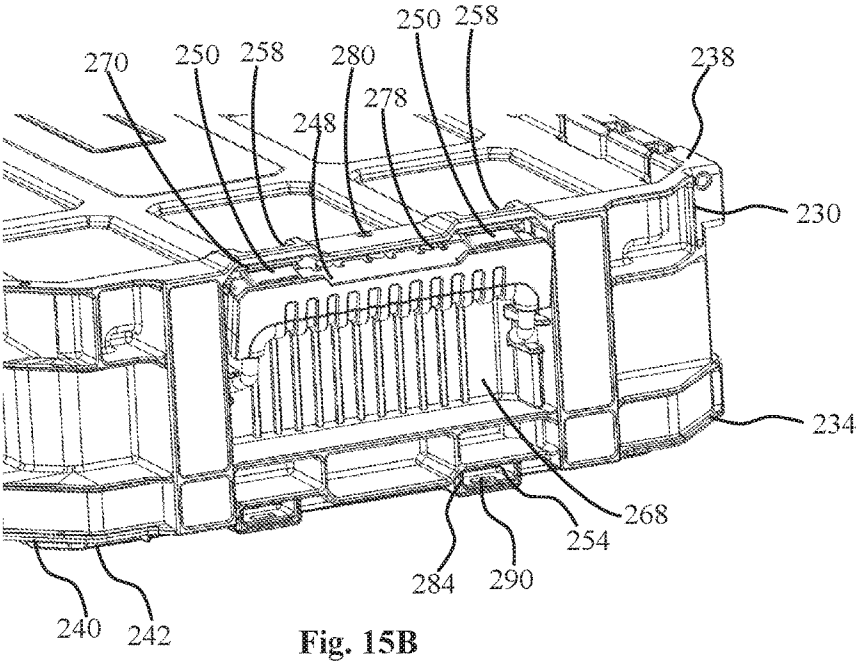

Fig. 15B

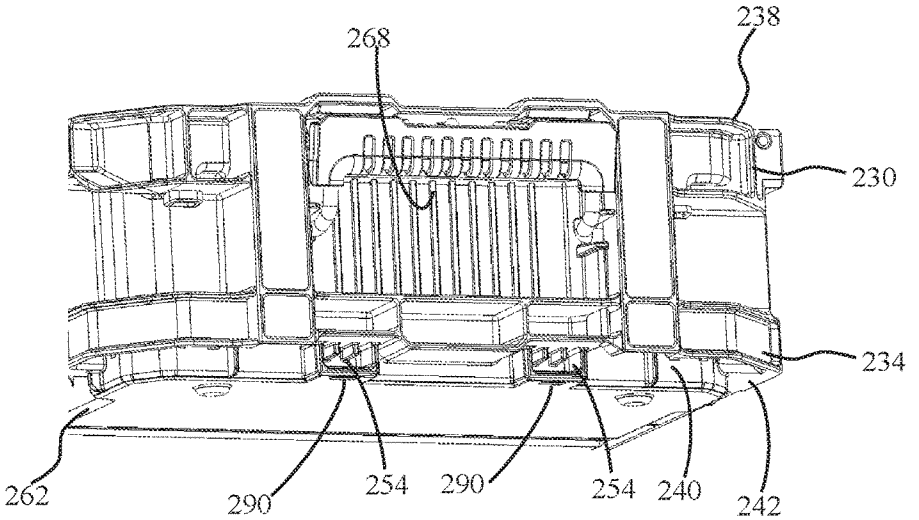

Fig. 15C

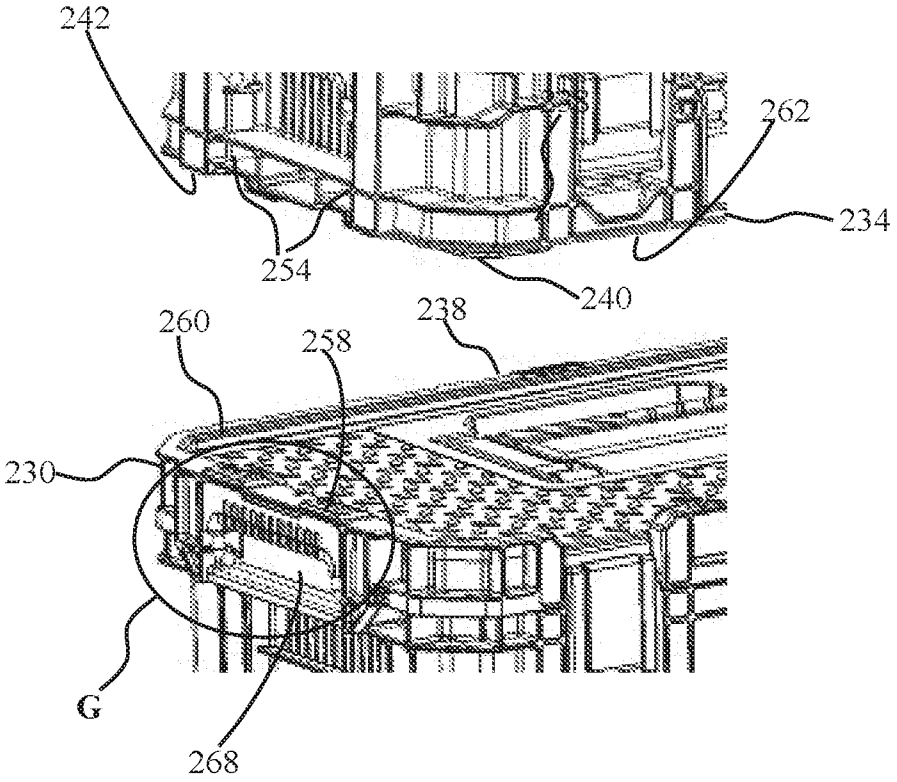

Fig. 16A

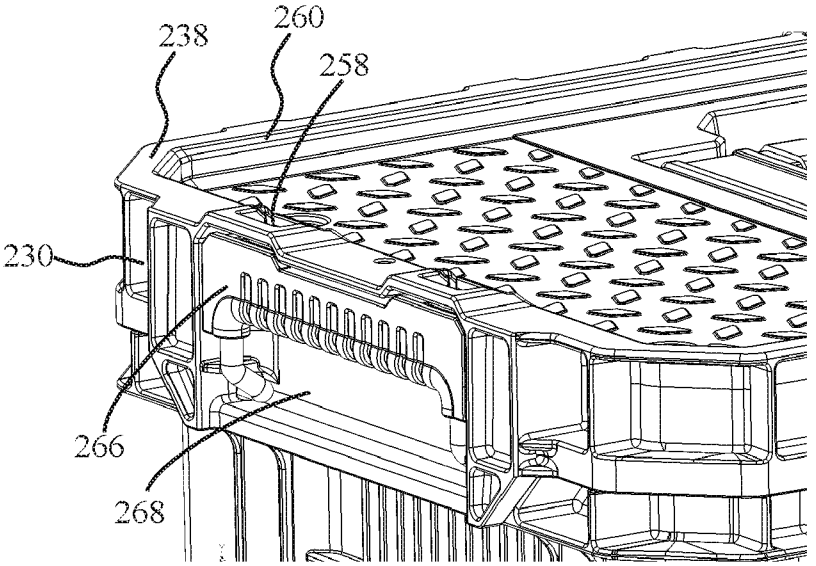

Fig. 16B

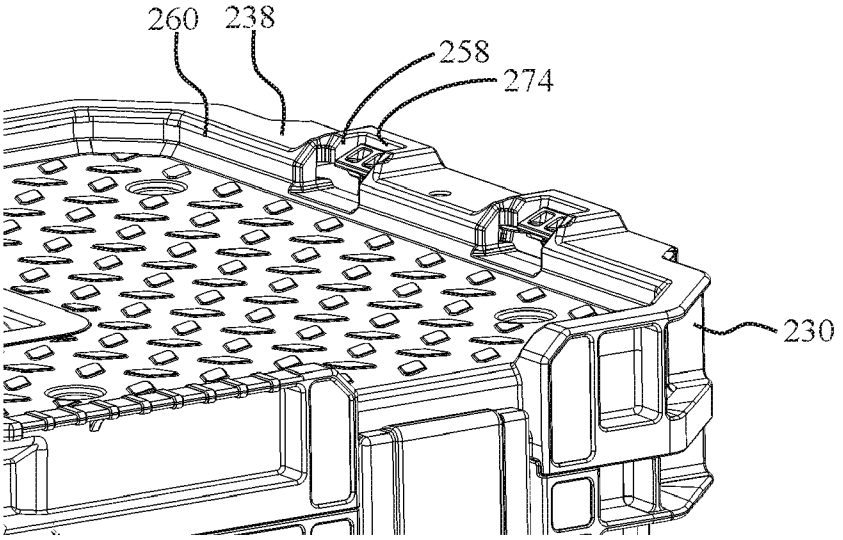

Fig. 16C

CONTAINER ASSEMBLY

TECHNOLOGICAL FIELD

[0001] The present disclosure is generally in the field of multi-container assemblies. More specifically the disclosure is directed to a locking system for detachably attaching containers to one another.

[0002] The term multi-container assembly as used herein denotes any set of containers configured for articulation to one another, the assembly being either stationary or locomotive. Said assembly can be used as a tool cart, workshop, traveling luggage, etc.

[0003] The term container as used herein denotes any type of container, used as a tool caddy, organizer, traveler bag, cosmetics bag, storage containers, locomoting containers, etc.

GENERAL DESCRIPTION

[0004] According to the present disclosure there is a container assembly comprising at least one first container and at least one second container, each of which is configured with a top base portion and a bottom base portion, wherein a top base portion of a first container is configured for at least partially nesting a bottom base portion of a second container, and wherein the first container is configured at a top portion thereof with a locking arrangement configured for locking engagement with a bottom portion of the second container nested within the top base portion.

[0005] According to a first aspect of the present disclosure the locking arrangement is a sliding locking mechanism, and according to a second aspect of the disclosure the locking mechanism is a snap-type latch mechanism.

[0006] According to the first aspect of the present disclosure there is provided a container assembly comprising at least one first container and at least one second container, detachably attachable to one another by a sliding locking mechanism. The sliding locking mechanism interacts between the at least one first container and at least one second container, wherein the at least one first container is configured at a top portion thereof with a first locking member and the at least one second container is configured at a bottom portion thereof with a second locking member, such that when the second container rests over the first container said first locking member and said second locking member are aligned and are configured for locking by interaction one with the other.

[0007] A bottom most container of the container (also referred to herein as a base container) assembly serves as a first container, wherein a container mounted over said base container is a second container. The arrangement is such that the container assembly can comprise additional containers, wherein each second container can be configured with a second locking member at a bottom portion of the container and with a first locking member at a top portion of the container, whereby the additional containers can be mounted over one another and locked to each other. In other words, the containers assembly may comprise a first container, serving as a base container, onto which at least one second container is mounted, such that each second container is configured with both a first locking member at a top portion and a second locking member at a bottom portion thereof.

[0008] When the containers assembly includes only two containers, the second container typically is configured with a second locking member at its bottom portion, and optionally with a first locking member at its top portion.

[0009] The sliding locking mechanism comprises a sliding unit, that comprises a slider member and at least one arresting member, the sliding unit being configured at one of the first container and the second container, and constitutes one of said first locking member and said second locking member. The sliding locking mechanism further comprises a corresponding at least one static locking element configured at the other of the first container and the second container and constituting the other one of said first locking member and said second locking member.

[0010] The sliding unit is slidingly displaceable between a locked position, in which the at least one arresting member arrests the corresponding static locking element, thereby locking the second container in position above the first container; and an unlocked position, wherein the arresting member is disengaged from the corresponding static locking element whereby the second container can be removed from the first container.

[0011] According to a particular example, the container assembly comprises a first, base container configured at a top portion thereof with said sliding unit, and a second container configured at a bottom portion thereof with said corresponding static locking element, whereby upon placing the second container over the first container the slider unit can be displaced into locking, thus arresting said static locking element.

[0012] Any one or more of the following features, designs and configurations, can be implemented in a multi-container assembly of the first aspect, according to the present disclosure, individually or in various combinations thereof:

- **[0013]** The container assembly may be modular, such that a bottom of any second container can be mounted over a top of any first container.
- **[0014]** A bottom-most container in a container assembly is a base container.
- **[0015]** The container assembly can be configured as a portable container assembly, wherein the base container can be fitted with a locomoting arrangement. According to one particular arrangement, the base container is wheeled.
- **[0016]** A top-most container, which serves as a second container, can be configured with only a bottom portion configured for mounting over a first container disposed therebelow, e.g. such a top-most container can be devoid of said second locking member. An example of such a container is a soft carry container.
- **[0017]** The first locking member and the second locking member can be interchangeable, i.e. the first locking member and the second locking member can be configured at either a top portion or a bottom portion of a respective container.
- **[0018]** The sliding locking mechanism can be configured with a visible indication indicating a 'locked' or 'unlocked' position thereof. The visible indication can be associated independently with each locking mechanism.
- **[0019]** The slider member of the sliding unit can be configured with a finger grip.
- **[0020]** The slider member of the sliding unit can snapingly displace between the respective locked/unlocked position.

[0021] The slider member may be spontaneously displaceable into arresting the static locking element, whereby one or both of the arresting element of the sliding unit and the respective static locking element can be configured with a chamfered gliding surface, whereby positioning of the second container over the first container results in spontaneous displacement of the slider member into arresting the static locking element.

[0022] The slider unit may be configured with a biasing mechanism for biasing the slider member into the locked position.

[0023] The container assembly may be configured with an anti-unlocking rod for simultaneously arresting sliding locking mechanisms of all respective containers at a locked position. The anti-unlocking rod can be locked at an anti-unlocking position.

[0024] The first locking member and the second locking member substantially do not project beyond or below a respective top most edge and a bottom most edge of the respective first container and second container.

[0025] The containers of a container assembly may be configured with at least two sliding locking mechanism disposed at opposite side faces of each container.

[0026] According to the second aspect of the disclosure, the container assembly comprises a locking arrangement that comprises at least one locking member and a locking receptacle. At least one side wall of the first container comprises said at least one locking member pivotally secured at a top portion of the first container, and said locking receptacle is configured at a base portion of the second container, said locking member configured with at least one locking latch configured for locking engagement within said locking receptacle; the locking member being pivotally displaceable between a locked position in which the at least one locking latch is radially engaged within the locking receptacle, such that the second container is lockingly articulated over the first container, and an unlocked position in which the locking member is outwardly pivoted and the at least one locking latch is disengaged from the locking receptacle such that the second container can be separated from the first container.

[0027] It is appreciated the term 'first container' and 'second container' denote the order of containers mounted over each other, whilst in fact a like container can constitute a first container and a second container. Accordingly, a container assembly according to the present disclosure may comprise two containers, wherein the bottom most container is a so-called first container, and a container mounted over said base container is thus a so-called second container. However, when a container assembly comprises three or more containers, a bottom-most container is a so-called first container, and a container mounted over said base container is a so-called second container, whilst said second container becomes a 'first container' when addressing the relation with a third container mounted thereover—in such a case the second container will be referred to as a 'first container' and the third container bearing thereover will in turn be referred to as a 'second container'.

[0028] According to a particular configuration of the disclosure, the first, bottom most container is a base container, configured with locomoting mechanism, e.g. a wheeling system, and a manipulating arrangement, e.g. a telescopic handle extending therefrom.

[0029] According to another aspect there is provided a container comprising at least one of a locking receptacle configured at the base portion of the container, and at least one locking member configured with at least one locking latch and being pivotally secured at the top portion of the container, the locking member being pivotally displaceable between a locked position at which the at least one locking latch radially inwardly projects into a top base portion of the container, and an unlocked position in which the locking member is outwardly pivoted.

[0030] The container is configured for use in conjunction with a container assembly as disclosed herein.

[0031] Any one or more of the following features, designs and configurations, can be implemented in a multi-container assembly of the second aspect, according to the present disclosure, individually or in various combinations thereof:

[0032] The locking member may be pivotally displaceable between its unlocked position and its locked position about an axis extending substantially parallel to a the top base portion of the container;

[0033] The first container can be configured with a support rim constituting a nesting portion, at least partially circumferencing the top base portion thereof, and wherein at the locked position the at least one locking latch radially projects inwardly from said rim;

[0034] The support rim can be configured with one or more latch passages, each slidingly accommodating a locking latch of the locking member;

[0035] The one or more locking latch of the locking member extends below a top surface of the support rim, whereby it is protected;

[0036] At an assembled position, a base portion of the first container is at least partially nested within the support rim of the first container;

[0037] The second container can be configured at the bottom base portion thereof with a nestable portion, shaped and sized for at least partial nesting within boundaries of the support rim of the first container;

[0038] The second container can be configured at the bottom base portion thereof with a seat portion at least partially circumferencing the nestable portion; said seat portion configured for bearing over a top surface of the support rim of the second container;

[0039] One or both of the nestable portion and the support rim can be configured with a chamfered gliding surface for easy positioning the nestable portion within the nesting portion;

[0040] The locking receptacle of the second container is configured at the seat portion and has an opening on a face of said seat portion, said opening disposed in alignment with a respective latch of the locking member;

[0041] Any container can be a bucket-like container configured with a top opening, or a container configured with a closable lid (e.g. a pivotable lid), or the container can have a fixed top cover, configured with side openings;

[0042] A container can be a tactic unit, such as power unit, power tool, support structure, etc., and configured with at least one of a locking receptacle configured at the base portion of the container, and at least one locking member configured with at least one locking latch and being pivotally secured at the top portion of the container, the locking member being pivotally

displaceable between a locked position at which the at least one locking latch radially inwardly projects into a top base portion of the container, and an unlocked position in which the locking member is outwardly pivoted; said container configured for interlocking stacking with on top or below a like container;

[0043] The locking member can be configured with several locking latches;

[0044] The locking member can serve as a carrying handle, at either the locked position and the unlocked position; whereby the carrying handle is configured with an gripping portion;

[0045] The gripping portion of the handle can extend within a recess configured within a side wall of the container, giving rise to a griping space facilitating an individual to insert his fingers for gripping said gripping portion;

[0046] The locking arrangement can be configured with an arresting arrangement for arresting the locking member at least at the locked position, regardless if a second container is mounted thereover;

[0047] The arresting arrangement can be a snap-type arrangement, wherein one of the at least one locking latch and a top portion of the container is configured with a projection and the other of the at least one locking latch and a top portion of the container is configured with a recess, wherein the locking member is snapingly displaceable at least into the locked position;

[0048] The locking member can be pivotally restricted between the locked position and the unlocked position; pivotal restriction can be facilitated by a restricting projection is configured to prevent the locking latch from disengaging from the supporting rim;

[0049] One or both of the one or more locking member and the latch passages can be configured with bulges for substantially reducing or eliminating slack of the locking member and friction arresting thereof;

[0050] One or more of the bulges can protrude into a respective depression for snapingly arresting of the locking member;

[0051] The locking arrangement can be configured such that in the event that a second container is placed over a first container, when the locking member of the first container is at the locked position, positioning the second container over the first container entails spontaneous displacement of the locking member into the unlocked position;

[0052] The locking arrangement is such that when a second container is placed over a first container and the locking mechanism is at the respective locked position, loads applied to the carrying handle are substantially not applied to the locking latches;

[0053] The arrangement is such that the one or more locking latches of a locking mechanism displace through the latch passage between a locked position in which the locking latches project inwards from the support rim, configured to engage with a respective locking receptacle of the second container, and an unlocked position in which the locking latches are retracted in an outward direction, such that they substantially do not project inwards from the support rim, and thus are disengaged from the locking receptacle of the second container;

[0054] According to a particular configuration, the container is rectangular and at least two opposite side walls are each configured with a locking mechanism.

[0055] Any one or more of the following features, designs and configurations, can be implemented in any of the aspects described herein, individually or in various combinations thereof:

[0056] The containers of the container assembly are interchangeable, wherein each container, apart for a wheeled container (i.e. the base container), can be mounted over each of the other containers, i.e. the container assemblage can be modular.

[0057] The containers of the container assembly can comprise one or more bucket-like containers, one or more drawer containers configured with a drawer-housing container, one or more organizer containers configured with an organizer container.

[0058] The containers of the container assembly can comprise one or more sliding containers. The sliding container comprising two sub-containers that are slidingly associated one with the other.

[0059] The containers of the container assembly can comprise one or more pivoting container. The pivoting container being pivotably associated with the first container or any of the second containers.

[0060] The containers of the container assembly can comprise one or more parallel mechanism containers, such that a sliding movement of one container with respect to the another container brings one of the containers into a parallel position with respect to the other container.

[0061] The container assembly can be configured with a handle. The handle can be fixed or detachable. The handle can be articulated to a base container and/or to any other container in the assembly.

[0062] The containers of the container assembly may be stackable over one another or partially nested one within the other.

[0063] The second container may be arrested over the first containers at either front orientation or back orientation, i.e. rotated at 180° about a longitudinal axis extending through the containers.

[0064] One or more of the containers of the container assembly may be detached and used as carry along, independent container.

BRIEF DESCRIPTION OF THE DRAWINGS

[0065] In order to better understand the subject matter that is disclosed herein and to exemplify how it may be carried out in practice, embodiments will now be described, by way of non-limiting examples only, with reference to the accompanying drawings, in which:

[0066] FIG. **1**A is a top, front left perspective view of a container assembly according to an example of the present disclosure, the locking arrangement at their locked position;

[0067] FIG. **1**B is an enlargement of the portion marked I in FIG. **1**A;

[0068] FIG. **2**A is a top, front right perspective view of a container assembly according to an example of the present disclosure, the locking mechanisms at their open, unlocked position;

[0069] FIG. **2**B is an enlargement of the portion marked II in FIG. **2**A;

[0070] FIG. **3** is a top, front left perspective view of a container assembly according to another example;

[0071] FIG. **4**A is an enlarged top view of a top container of the assembly of FIG. **3**;

[0072] FIG. **4**B is an enlargement of the portion marked III in FIG. **3**;

[0073] FIG. **4**C is an enlargement of the portion marked IV in FIG. **4**A;

[0074] FIG. **5**A is an enlarged bottom view of a top container of the assembly of FIG. **3**;

[0075] FIG. **5**B is a close-up view of the bottom of the top container of FIG. **5**A;

[0076] FIG. **6**A is a planar view illustrating a portion of a container assembly, with two locking mechanisms, at a locked position and at an unlocked position;

[0077] FIG. **6**B is a schematic representation of FIG. **6**A, exposing the locking arrangement;

[0078] FIG. **6**C is an enlargement of the locking arrangement of FIG. **6**B at the unlocked position;

[0079] FIG. **6**D is an enlargement of the locking arrangement of FIG. **6**B at the locked position;

[0080] FIG. **7**A is a perspective view of an outside face of a locking slide;

[0081] FIG. **7**B is a perspective view of an inside face of a locking slide;

[0082] FIG. **8**A is a perspective view of a container assembly according to another example;

[0083] FIG. **8**B is an exploded view of the principle components of the container assembly of FIG. **8**A;

[0084] FIG. **8**C is a modification of the container of FIG. **8**A;

[0085] FIG. **8**D is another modification of the container of FIG. **8**A;

[0086] FIG. **9**A is a portion of a section along line L-L in FIG. **1**B;

[0087] FIG. **9**B is a portion of a section along line O-O in FIG. **2**B

[0088] FIG. **10** illustrates the container assembly of FIG. **1**A, fitted with a locking arrangement.

[0089] FIG. **11**A is a top front right side perspective view of a container assembly according to an example of the present disclosure;

[0090] FIG. **11**B is a longitudinal section along line V-V in FIG. **11**A;

[0091] FIG. **11**C is a close-up on the portion marked A in FIG. **11**B, showing a locking arrangement of a second aspect of the disclosure, at its unlocked position;

[0092] FIG. **11**D is a section along line VI-VI in FIG. **11**C;

[0093] FIG. **11**E is a section along line VII-VII in FIG. **11**C;

[0094] FIG. **12**A is a top rear left side perspective view of FIG. **11**A;

[0095] FIG. **12**B is a close-up on the portion marked B in FIG. **12**A, showing a locking arrangement of a second aspect of the disclosure, at its locked position;

[0096] FIG. **13**A is a partial section of the locking arrangement, along line VIII-VIII in FIG. **12**B;

[0097] FIG. **13**B is a partial section of the locking arrangement, along line IX-IX in FIG. **12**B;

[0098] FIG. **13**C is a partial section of the locking arrangement, along line X-X in FIG. **12**B;

[0099] FIG. **13**D is a partial section of the locking arrangement, along line XI-XI in FIG. **12**B;

[0100] FIG. **13**E is a partial section of the locking arrangement, along line XII-XII in FIG. **12**B;

[0101] FIG. **14** is a partially exploded view of FIG. **11**A, illustrating a top container separate from the container assembly;

[0102] FIG. **15**A is a close-up of the portion marked D in FIG. **14**;

[0103] FIG. **15**B is a close-up of the portion marked E in FIG. **15**A;

[0104] FIG. **15**C is a bottom perspective view of FIG. **15**B;

[0105] FIG. **16**A is a close-up similar to FIG. **15**A, however taken in direction of arrow F in FIG. **15**A;

[0106] FIG. **16**B is a close-up of the portion marked G in FIG. **16**A; and

[0107] FIG. **16**C is a close-up of the portion marked G in FIG. **16**A.

DETAILED DESCRIPTION OF EMBODIMENTS

[0108] Attention is first directed to FIGS. **1** and **2** of the drawings directed to a first example of a container assembly according to the present disclosure. The container assembly, generally designated **10**, is a wheeled tool cart assembly comprising a wheeled base open top, bucket-like container **12**, fitted with wheels **14** at a bottom rear portion of the base container, and a telescopic handle **16** extending from the base container and being manipulable between a fully retracted position (not shown) and at least one extracted position for locomoting the container assembly shown in FIG. **1**.

[0109] The container assembly **10** further comprises a second bucket-like container **20** mounted over container **12**, said container **20** being configured with a pivotable lid **22** (the lid **22** being fitted with a carrying handle **24** as will be described with reference to FIG. **8**C), said lid **22** secured by a pair of latches **26** at a front side of the container **20**. Over container **20** there is an organizer-type container **30** accommodating a plurality of removable storage boxes (not seen), said container **30** being configured with a pivotable lid **32** (the lid **32** being fitted with a carrying handle **34**), said lid **32** secured by a pair of latches **36** at a front side of the container **30**. Over container **30**, there is provided yet an organizer container **40**, being a double-deck cantilever-type organizer, fitted with a top cover **44** and securable at a closed position by a pair of locking latches **46**.

[0110] The arrangement is such that the containers are stacked one over the other and locked with respect to one another so as to provide to a solid, uniformly rolling tool-cart, the containers are securely locked to one another by a sliding type locking mechanism generally designated **60**, as will be discussed hereinafter in greater detail. Accordingly, the second bucket-like container **20** is locked over base container **12**; organizer-type container **30** is locked over second bucket-like container **20**; and cantilever-type organizer container **40** is in turn locked over organizer-type container **30**. When the containers are mounted over one another and at the locked position, the container assembly **10** is solid can be safely and easily rolled over the wheels **14**.

[0111] The sliding locking mechanism **60** comprises a slider member **64** configured at a top portion of each container, and configured for cooperating in conjunction with a locking element **90** (seen in FIG. **5**A) projecting at a bottom portion of respective containers, as will become apparent herein.

[0112] The slider member **64** is slidingly retained below a guard lip **69** (e.g. FIG. **4**A) at a top edge of each of the respective containers **12**, **20** and **30** said lip guard configured with an openings **71** extending in register with locations of the arresting elements **66** (when at the locked position) and reciprocally displaceable along the edge along arrow **63**, between a locked position (FIG. **1**B), and an unlocked position (FIG. **2**B). The slider member **64** is in the form of a bar configured at its inside face **65** with a pair of arresting elements **66** laterally projecting and defining an opening **68** at a top edge **70** of the slider member, with a relief area **72** below said arresting elements **66**. It is seen in FIG. **7**B that the slider element is configured at a bottom edge thereof with another pair of arresting elements **69**, rendering the slider element **64** useable for either left or right side mounting.

[0113] The slider member **64** is configured at its outside face **75** with a finger grip in the form of a depression **78**, and a locked indicator (e g marking at **82**) and an unlocked indicator (e g marking at **84**), which during use only one of which projects from either side of the accommodating slot, indicative as to the respective locked/unlocked position.

[0114] The locking mechanism **60** further comprises a static locking element in the form of an L-shaped locking lug **90** extending at a bottom portion of a second container (i.e. containers **20**, **30**, **40**), giving rise to a relief area **92** above said locking lug **90**.

[0115] In operation, when a so-called second container (i.e. containers **20**, **30**, **40**) is placed over any other so-called first container (containers **12**, **20**, **30**), with the locking mechanism **60** at its open, unlocked position, the locking lug **90** protrudes into opening **71** of the guard lip **69**, with a free end tip **67** of the arresting element **66** disposed opposite the relief area **92** (FIG. **6**C). At this position the slider member **64** can be slidingly displaced, in direction of arrow **91** in FIG. **6**B, into locking engagement with the locking lug **90**, so that the of the arresting element **66** is now disposed within the relief area **92**, with the arresting element **66** extending parallel above the corresponding locking lug **90** (FIG. **6**D), thus preventing disengaging the containers from one another.

[0116] Unlocking the container assembly **10** takes place by displacing the arresting element **66** in an opposite direction, i.e. in direction of arrow **93** on FIG. **6**B, resulting in displacement of the free end tip **67** away from the relief area **92**, i.e. disengagement of arresting element **66** from the locking lug **90**, facilitating detaching of the containers.

[0117] It is noted that the bottom most portion of the locking lugs **90** does not project below a corresponding bottom most portion **89** of the respective second container (e.g. container **30** in FIG. **5**A). This is facilitated by locating the locking lugs **90** at a bottom portion of side walls **99** of the second containers, and likewise by the provision of an upwards projection at the top of the first containers (in fact, a peripheral projection **100** at the lid **32** according to an example). Likewise, the top most portion of the arresting elements **66** does not project over a corresponding top most portion of the respective first container, minimizing potential damage to the arresting elements and the locking lugs.

[0118] Furthermore, it is shown that the container assembly is configured with two locking mechanisms **60**, one disposed at each respective side of the containers. However, it is appreciated that a container assembly can be configured with more or less such locking mechanisms **60**.

[0119] According to one particular example, the locking mechanisms **60** are disposed symmetrically, whereby the second container can be mounted over the respective first container at either front facing or back facing orientation (i.e. a front face of one container coextends a rear face the container disposed above).

[0120] In the disclosed arrangement the arresting elements **66** and the locking lugs **90** extend substantially parallel to one another, and the arresting elements **66** are slidingly displaceable parallel to the locking lugs **90**. Likewise, in the illustrated disclosure, the slider members **64** with the arresting elements **66** are displaceable parallel to the respective guard lip **69**. Furthermore, as seen best in FIGS. **6**A and **6**B, the slider members **64** are slidingly supported within a supporting space between two parallely disposed surfaces **104** and **108** (FIGS. **5**A, **6**A, **9**A and **9**B).

[0121] Whilst in the illustrated examples the first container (i.e. a bottom container of a pair of a container assembly) is configured with the first locking member (i.e. in form of the slider locking member) and the second container (i.e. a top container of a pair of a container assembly) is configured with the second locking member (i.e. in form of the static locking element), it is noted that these can be otherwise configured, namely with the second locking member configured at the first container and with the first locking member configured at the second containers, respectively.

[0122] According to a particular configuration, either or both a surface of the sliding member and of the wall surfaces slidingly supporting the sliding member are configured with protrusions and or depressions (not seen), whereby the sliding member is prevented from spontaneous displacement between its respective locked and unlocked positions, as it requires some degree of force to displace same, optionally in a 'clicking' manner.

[0123] Whilst in the illustrated examples the second containers are stacked over the respective first containers, it is appreciated that according to yet an example of the disclosure, the second container can be at least partially nested within the respective first container, however with a projecting portion of the second container extending above a top edge of the respective first container, wherein the second locking member is thus configured at said projecting portion of the second container.

[0124] In order to ensure smooth and easy locking of the locking mechanism, it is required that the second locking member, namely the static locking lug **90** extend in place opposite the relief area **72** below said arresting elements **66**. This is facilitated by providing true positioning arrangement of the second container over first container, whereby location arrangements are configured, namely groove **135** (FIG. **5**B) at least partially surrounding a bottom portion of the respective second container, and configured for easy mounting over the peripheral projection **100** at the lid **32**.

[0125] According to a different example of the disclosure, the slider member is normally biased into the locking position, whereby displacing it into the open position requires overcoming the biasing force. This can be facilitated by manually displacing the slider member into the open position, or by configuring facing edges of the corresponding free end tip **67** of the arresting element **66** (FIGS. **6**C and **6**D) and the free end of the locking lug **90**, with a chamfered portion (**138** and **140**, shown in FIGS. **6**C and **6**D), whereby positioning the second container over the first container at an engaging position, generates a reactionary

force between said chamfered portions **138** and **140**, having a resultant force component in a lateral direction, entailing corresponding lateral momentary displacement of the slider member **64** into the open position, facilitating the locking lug **90** to snap below the arresting element **66** with the slider member returning to its locked position under the biasing effect (FIG. **6**D).

[0126] Reverting now to FIG. **3** of the drawings, the container assembly **10** of FIGS. **1** and **2** is illustrated, however with the organizer container **40** removed. It can be seen (also in FIG. **4**A) that the top cover **156** of the uppermost container **30** has a top face substantially similar to top face of cover **44** of that of organizer container **40**. This arrangement applies to other containers too, e.g. container **20** has a top face **158** (FIGS. **8**B and **8**C) substantially similar to top cover **156** of container **39**. Like wise to bottom faces of such containers, rendering modularity of the container assembly. Accordingly, the containers of the container assembly have matching top faces and bottom faces, whereby any second container of the assembly can be mounted over any first container, at any order. The above applies also in the case of a bucket-like container (e.g. container **12** of the assembly), whereby the top peripheral portion **100** mimics the top of any other container of the assembly.

[0127] One example of modular assembly is shown in FIG. **8**A, wherein the wheeled base container **12** serves as a first container and wherein a second container in the form of organizer container **30** is mounted over the open top bucket-like container **12**, with locking mechanism **60** securely fixing the two. Further above, the container **30** serves as a first container wherein a second container now takes form by container **20**, locked over container **30** by locking mechanism **66**. It is seen that the container **20** is configured with a locking mechanism **60** of the above described configuration and has a modular top face **158**, whereby it is ready for locking receiving thereover any other container of the assembly.

[0128] In FIG. **8**C a container **20** with lid **22** is mounted over the open top bucket-like container **12**, with locking mechanism **60** securely fixing the second container **20** over the first container **12**. It is seen that the second container **20** is configured with a locking mechanism **60** of the above described configuration and a modular type top face **158**, whereby it is ready for locking receiving thereover any other container of the assembly. In this case the assembly can be rolled over the wheels **14** by the telescopic handle assembly **16** (removed in this drawing) or by aid of carrying handle **24** fitted at cover **22**.

[0129] Another example is illustrated in FIG. **8**D, wherein a second container is now in the form of organizer container **30** mounted over the open top bucket-like container **12**, with locking mechanism **60** securely fixing the second container **30** over the first container **12**. It is seen that the second container **30** is configured with a locking mechanism **60** of the above described configuration and has a modular top face **156**, whereby it is ready for locking receiving thereover any other container of the assembly.

[0130] Turning now to FIG. **10** of the drawings there is illustrated a container assembly **10'** according to the disclosure, wherein there is provided an unlocking mechanism in the form of a rod **174** extending through openings **178** of the respective containers. The rod **174** is secured in place, for example by a pad lock (not shown). The arrangement is such that the rod **174** extends in close proximity to the housing portion of each container accommodating the locking mechanism **66**, whereby when the rod **174** is in place all the slider members **64** of the locking mechanisms are arrested at their locked position, preventing their sliding displacement into the open position, whereby all containers of the assembly are locked over one another. An optional locking configuration is obtained by applying a pad lock through each or selective openings **178**, resulting in selective locking arrestment of locking mechanisms **66**.

[0131] With further reference to FIGS. **11** to **16** there is disclosed a container locking mechanism according to the second aspect of the present disclosure. In the illustrated example the container assembly, generally designated **200**, comprises three substantially rectangular containers, namely a base container **204** fitted with a pair of locomotive wheels **206** and a telescopic manipulating handle **210** (FIG. **12**A; illustrated at a retracted, collapsed position). Container **204** is a bucket-like container, i.e. configured with a top opening and typically suited for carrying large items such as hand tools and the like. Mounted over base container **204** there is a second container in the form of a tool box container **214** (of the type comprising a pivotally secured lid closeable by toggle latches **216** (FIG. **11**A)). An organizer-type container **220** is mounted over the tool box **214**, with a pivotal carrying handle articulated thereto.

[0132] The disclosed arrangement thus illustrates three containers mounted on top of one another, wherein the base container **204** is referred to as a first container and the tool box container **214** mounted thereover is referred to as a second container. However, when referring to the relation between the tool box container **214** and the organizer container **220**, then the tool box container **214** is referred to as a first container and the organizer container **220** mounted thereover is referred to as a second container. That being said, it is appreciated that the disclosed locking arrangement refers to locking engagement between any first container and second container mounted thereover. It is also noted that the container assembly is modular in the sense that any container may be mounted and locked over any other container, even without the base container **204** (with the exception that the base container always serves as a first container).

[0133] As can be seen in the annexed figures, each first container (in the present example each of the three containers **204**, **214** and **216**) is fitted with a top base portion **230** and a bottom base portion **234** (save for the base container **204**). Each of the three containers is configured with an upwardly projecting support rim **238**, at least partially encircling/circumferencing a top face thereof, however extending at least at side wall portions of the respective containers. The support rim thus constitutes a nesting portion, at least partially circumferencing the top base portion of the containers.

[0134] The tool box container **214** and the organizer-type container **220** are configured at their base with a nestable portion **240** (i.e. a downward extending basin like portion) shaped and sized for at least partial nesting within boundaries of the nesting portion defined by the support rim **238**, however wherein at the assembled position a shoulder seat portion **242** of the nestable portion **240** bears over at least portions of the support rim **238**.

[0135] Each of the three containers **204**, **214** and **216** is configured at two opposite side walls with a locking mechanism generally designated **245**, comprising a locking mem-

ber **248** pivotally secured at the top portion **230** of the so-called first container (however seen in each of the illustrated containers), said locking member **248** configured with at least one locking latch **250** configured for locking engagement within a locking receptacle **254** formed at the base portion **234** of each second container (containers **214** and **216** in the present case).

[0136] The locking member **248** is pivotally displaceable between a locked position (FIGS. **11**B, **12**A, **12**B, **13**A to **13**E), in which the at least one locking latch **250** is engaged within the respective locking receptacle **254** of the second container mounted thereover, and an unlocked position (FIGS. **11**B to **11**E, **15**A to **15**C) in which the locking member **248** is outwardly pivoted and the wherein the at least one locking latch **250** is disengaged form the respective locking receptacle **254**, wherein the second container can be separated from the first container. According to a particular configuration, pivotal displacement of the locking member between its respective locked position and unlocked position is about 15°.

[0137] The locking latches **250** are displaceable through latch passages **280** extending through the support rim **238**, wherein the locking latches **250** are displaceable between the locked position at which they radially project inwardly from an inner edge of the support rim **238**, and the unlocked position wherein the latches **250** are concealed, i.e. do not project from the support rim **238**, so that the latches are protected and are not exposed to undesired impact.

[0138] As can be seen, pivotal displacement of the locking member **248** is translated into radial displacement of the locking latch **250**. Further, in the illustrated example each locking member is configured with two locking latches **250**. The locking member **248** is articulated at the top portion of the containers and is pivotable about a horizontal axis designated X (when the respective container is placed over a leveled surface, parallel to the top/bottom base thereof).

[0139] In order to facilitate easy and smooth placing of a second container over a first container, in the nesting arrangement as disclosed herein above, the nestable portion **240** and the support rim **238** of the nesting portion are configured with chamfered gliding surfaces **260** and **262**, respectively.

[0140] The locking member **248** has also a carrying handle **266**, and is configured with an gripping portion, whereby a container can be carried at either the locked position and the unlocked position, the carrying handle **266** extends within a recess **268** formed at the side wall of the container, thus providing to a griping space facilitating an individual to insert his fingers for gripping said gripping portion.

[0141] The locking latches **250** are configured with an upward projection **270** and the top face of the support rim at the vicinity of the latch passages **280** is configured with an arresting opening **274**, wherein pivotal displacement of the locking member **248** is restricted at its unlocked position and the locking member is prevented from dispositioning. Furthermore, the locking member **248** is configured at a top face thereof with several bulges **278** for substantially reducing or eliminating slack of the locking member and friction arresting thereof, and wherein at least one bulges is configured for protruding into a respective depression **280** configured at an inner top wall of the support rim, for snapingly arresting of the locking member at the locked position, and preventing spontaneous displacement of the locking member into the unlocked position.

[0142] Reverting now to the locking receptacle **254** configured at the respective bottom base portion **234** of each second container, it is noted that said locking receptacle **254** is configured at the seat portion and has an opening **284** on a side face of said seat portion, said opening disposed in alignment with a respective locking latch **250** of the locking member **248**. Further, the locking latch **250** is configured at a fore bottom end portion thereof, with a projection **288** (best seen in FIG. **11**D), configured in turn for snapingly arresting within a corresponding opening **290** at a bottom wall portion of the locking receptacle **254**, for arresting the latch and hence the locking member at the locked position, whereby manual manipulation is required for displacing the locking handle into the unlocked position.

[0143] With further reference to FIGS. **11**D, **13**A and **13**E, it is seen that the fore top edge **294** of the locking latches **250** is chamfered and is configured such that it is engageable by a bottom edge **296** of the locking receptacle **254**, whereby at the event that a second container is placed over a first container, when the locking member **248** of the first container is at the locked position (FIGS. **13**A and **13**B), positioning the second container over the first container entails spontaneous displacement of the locking member into the unlocked position (FIG. **11**D) owing to the bottom edge **296** encountering said fore top edge **294** of the locking latches **250** and pivotally displacing it outwards, into the unlocked position.

1.-**41**. (canceled)

42. A containers assembly comprising at least one first container and at least one second container, detachably attachable to one another by a sliding locking mechanism; said sliding locking mechanism interacts between the at least one first container and at least one second container, wherein the at least one first container is configured at a top portion thereof with a first locking member and the at least one second container is configured at a bottom portion thereof with a second locking member; such that when the second container rests over the first container, said first locking member and said second locking member are aligned and are configured for lockingly interacting with one another.

43. The containers assembly of claim **42**, further comprising at least one additional container, said at least one additional container being configures with a second locking member at a bottom portion thereof and with a first locking member at a top portion of thereof, such that the at least one additional container being mountable over said second container and locked therewith.

44. The containers assembly of claim **43**, wherein the sliding locking mechanism comprises a sliding unit that comprises a slider member and at least one arresting member,

the sliding unit being configured at one of the first container and the second container, and constitutes one of said first locking member and said second locking member; and

a corresponding at least one static locking element configured at the other of the first container and the second container and constituting the other one of said first locking member and said second locking member.

45. The containers assembly of claim **44**, wherein the sliding unit is slidingly displaceable between a locked position, in which the at least one arresting member arrests the corresponding static locking element, thereby locking the second container in position above the first container;

and an unlocked position, wherein the arresting member is disengaged from the corresponding static locking element whereby the second container can be removed from the first container.

46. The containers assembly of claim **44**, wherein the first container is configured at a top portion thereof with said sliding unit, and the second container is configured at a bottom portion thereof with said corresponding static locking element.

47. The container assembly of claim **42**, wherein the slider member of the sliding unit is snapingly displaceable between the locked position to the unlocked position.

48. The container assembly of claim **42**, wherein the slider member is spontaneously displaceable into arresting the static locking element, whereby one or both of the arresting element of the sliding unit and the respective static locking element are configured with a chamfered gliding surface, whereby positioning of the second container over the first container results in spontaneous displacement of the slider member into arresting the static locking element.

49. The container assembly of claim **42**, wherein the slider unit is configured with a biasing mechanism for biasing the slider member into the locked position.

50. The containers assembly of claim **42**, wherein the first locking member and the second locking member are interchangeable.

51. The containers assembly of claim **50**, wherein the first locking member and the second locking member are configured at either a top portion or a bottom portion of a respective container.

52. The container assembly of claim **42**, wherein each container in the assembly is configured with at least two sliding locking mechanism disposed at opposite side faces of each container.

53. A containers assembly comprising at least one first container and at least one second container, detachably attachable to one another by a locking arrangement that comprises at least one locking member and a locking receptacle; at least one side wall of the first container comprises said at least one locking member pivotally secured at a top portion of the first container, and said locking receptacle is configured at a base portion of the second container, said locking member configured with at least one locking latch configured for locking engagement within said locking receptacle;

the locking member being pivotally displaceable between a locked position in which the at least one locking latch is radially engaged within the locking receptacle, such that the second container is lockingly articulated over the first container, and an unlocked position in which the locking member is outwardly pivoted and the at least one locking latch is disengaged from the locking receptacle such that the second container can be separated from the first container.

54. The containers assembly of claim **53**, wherein the locking member is pivotally displaceable between the unlocked position and the locked position about an axis extending substantially parallel to a top base portion of the container.

55. The container assembly of claim **53**, wherein the first container is configured with a support rim constituting a nesting portion, at least partially circumferencing a top base portion of the first container, and wherein at the locked position the at least one locking latch radially projects inwardly from said rim.

56. The container assembly of claim **55**, wherein said support rim is configured with one or more latch passages, each slidingly accommodating a locking latch of the locking member.

57. The container assembly of claim **55**, wherein one or both of the one or more locking member and the latch passages is configured with bulges for substantially reducing or eliminating slack of the locking member and friction arresting thereof; optionally wherein said one or more of the bulges protrude into a respective depression for snapingly arresting the locking member.

58. The container assembly of claim **55**, wherein one or more locking latches of a locking arrangement displace through the latch passage between a locked position in which the locking latches project inwards from the support rim, configured to engage with a respective locking receptacle of the second container, and an unlocked position in which the locking latches are retracted in an outward direction, such that they substantially do not project inwards from the support rim, and are disengaged from the locking receptacle of the second container.

59. The container assembly of claim **55**, characterized by one or more of the following features:

(a) one or more locking latch of the locking member extends below a top surface of the support rim,

(b) when at an assembled position, a base portion of the first container is at least partially nested within a support rim of the first container,

(c) the second container is configured at the bottom base portion thereof with a nestable portion, shaped and sized for at least partial nesting within boundaries of the support rim of the first container, and

(d) wherein the locking member is pivotally restricted between the locked position and the unlocked position; pivotal restriction being facilitated by a restricting projection that is configured to prevent the locking latch from disengaging from the support rim.

60. The container assembly of claim **53**, characterized by one or more of the following features:

(a) the locking receptacle of the second container is configured at the seat portion and has an opening on a face of said seat portion, said opening disposed in alignment with a respective latch of the locking member;

(b) the locking member is configured with several locking latches;

(c) wherein the locking member serves as a carrying handle, at either the locked position and the unlocked position, optionally wherein the carrying handle is configured with an gripping portion, wherein the gripping handle can extend within a recess configured within a side wall of the container, giving rise to a griping space facilitating an individual to insert his fingers for gripping said gripping portion;

(d) the locking arrangement is configured with an arresting arrangement for arresting the locking member at least at the locked position, regardless if a second container is mounted thereover; optionally the arresting arrangement being a snap-type arrangement, wherein one of the at least one locking latch and a top portion of the container is configured with a projection and the

other of the at least one locking latch and a top portion of the container is configured with a recess, wherein the locking member is snapingly displaceable at least into the locked position; and

(e) when a second container is placed over a first container and the locking mechanism is at the respective locked position, loads applied to the carrying handle are substantially not applied to the locking latches.

61. The container assembly of claim **53**, wherein in the event that a second container is placed over a first container, when the locking member of the first container is at the locked position, positioning the second container over the first container entails spontaneous displacement of the locking member into the unlocked position.

62. The container assembly of claim **42**, characterized by one or more of the following features:

(a) being configured as a portable container assembly;

(b) a bottom most container of the assembly is fitted with a locomoting arrangement;

(c) the assembly comprises one or more bucket-like containers, one or more drawer containers configured with a drawer-housing container, one or more organizer containers configured with an organizer container, one or more sliding containers, one or more pivoting containers, and/or one or more parallel mechanism containers; and

(d) configured with a handle.

63. The container assembly of claim **53**, characterized by one or more of the following features:

(a) being configured as a portable container assembly;

(b) a bottom most container of the assembly is fitted with a locomoting arrangement;

(c) the assembly comprises one or more bucket-like containers, one or more drawer containers configured with a drawer-housing container, one or more organizer containers configured with an organizer container, one or more sliding containers, one or more pivoting containers, and/or one or more parallel mechanism containers; and

(d) configured with a handle.

* * * * *