US006592000B1

(12) **United States Patent**
Owens et al.

(10) **Patent No.: US 6,592,000 B1**
(45) **Date of Patent: Jul. 15, 2003**

(54) **STERILIZATION CONTAINER FOR MEDICAL INSTRUMENTATION HAVING A SLIDING LATCH**

(75) Inventors: **Daniel Owens**, Silver Lake, IN (US); **Thomas J. Bussell**, Warsaw, IN (US)

(73) Assignee: **Paragon Medical, Inc.**, Pierceton, IN (US)

(*) Notice: Subject to any disclaimer, the term of this patent is extended or adjusted under 35 U.S.C. 154(b) by 0 days.

(21) Appl. No.: **09/494,560**

(22) Filed: **Jan. 31, 2000**

(51) **Int. Cl.**[7] **B65D 6/00**; B65D 45/16

(52) **U.S. Cl.** **220/324**; 220/4.22; 292/10

(58) **Field of Search** 220/324, 281, 220/314, 315, 322, 323, 326, 4.22; 70/63, 67, 68, 70, 159, 160; 292/10, 33, 32, 163, 137.337

(56) **References Cited**

U.S. PATENT DOCUMENTS

195,117	A	*	9/1877	Frankel	392/83
1,975,173	A	*	10/1934	Pennock et al.	206/232
2,656,206	A	*	10/1953	Piker	292/86
3,339,956	A	*	9/1967	Bencene et al.	292/127
4,625,885	A		12/1986	Nichols	
4,704,254	A		11/1987	Nichols	
4,817,799	A	*	4/1989	Gregerson et al.	220/326
4,915,913	A		4/1990	Williams et al.	
4,974,740	A	*	12/1990	Niles et al.	220/324
5,098,676	A		3/1992	Brooks, Jr.	
5,131,558	A	*	7/1992	Hiromori	220/326
5,156,293	A	*	10/1992	Petterson et al.	220/326
5,340,551	A		8/1994	Berry, Jr.	
D350,398	S		9/1994	Campbell et al.	
5,346,677	A		9/1994	Risk	
5,348,185	A		9/1994	Buckner, III et al.	
5,352,416	A		10/1994	Wagner	
5,370,081	A	*	12/1994	Gordon	220/323
5,407,648	A		4/1995	Allen et al.	
5,424,048	A		6/1995	Riley	
5,433,929	A		7/1995	Riihimaki et al.	
5,441,707	A		8/1995	Lewis et al.	
5,460,288	A	*	10/1995	Balzeau	220/326
5,490,975	A		2/1996	Dane	
5,508,006	A		4/1996	Gabele et al.	
5,518,115	A		5/1996	Latulippe	
5,524,755	A		6/1996	Deeds	
5,525,314	A		6/1996	Hurson	
5,628,970	A		5/1997	Basile et al.	
5,641,065	A		6/1997	Owens et al.	
5,682,910	A	*	11/1997	Kizawa et al.	132/293
5,706,968	A	*	1/1998	Riley	220/326
5,732,821	A		3/1998	Stone et al.	
5,791,472	A		8/1998	Davis	
5,823,340	A		10/1998	Maihofer	
5,887,745	A	*	3/1999	Wood	220/326
5,947,462	A	*	9/1999	Roussel	220/324
6,012,577	A		1/2000	Lewis et al.	
6,253,947	B1	*	7/2001	Yang	220/324

* cited by examiner

Primary Examiner—Stephen K. Cronin
Assistant Examiner—Niki M. Eloshway
(74) *Attorney, Agent, or Firm*—Baker & Daniels

(57) **ABSTRACT**

A container having a base and a removable lid. Latches are attached to the lid for securing the lid to the base. Each latch includes a guide part secured to the lid and a slide part guided by the guide part between a closed position engaging the base and an open position spaced from the base.

14 Claims, 5 Drawing Sheets

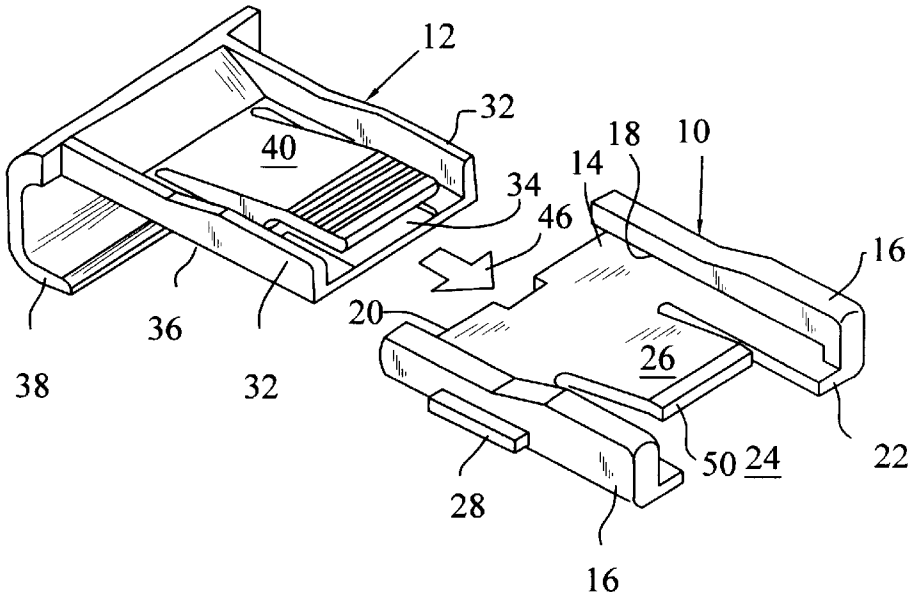

ToughBuilt EX1028
ToughBuilt v. Meridian
IPR2025-01462

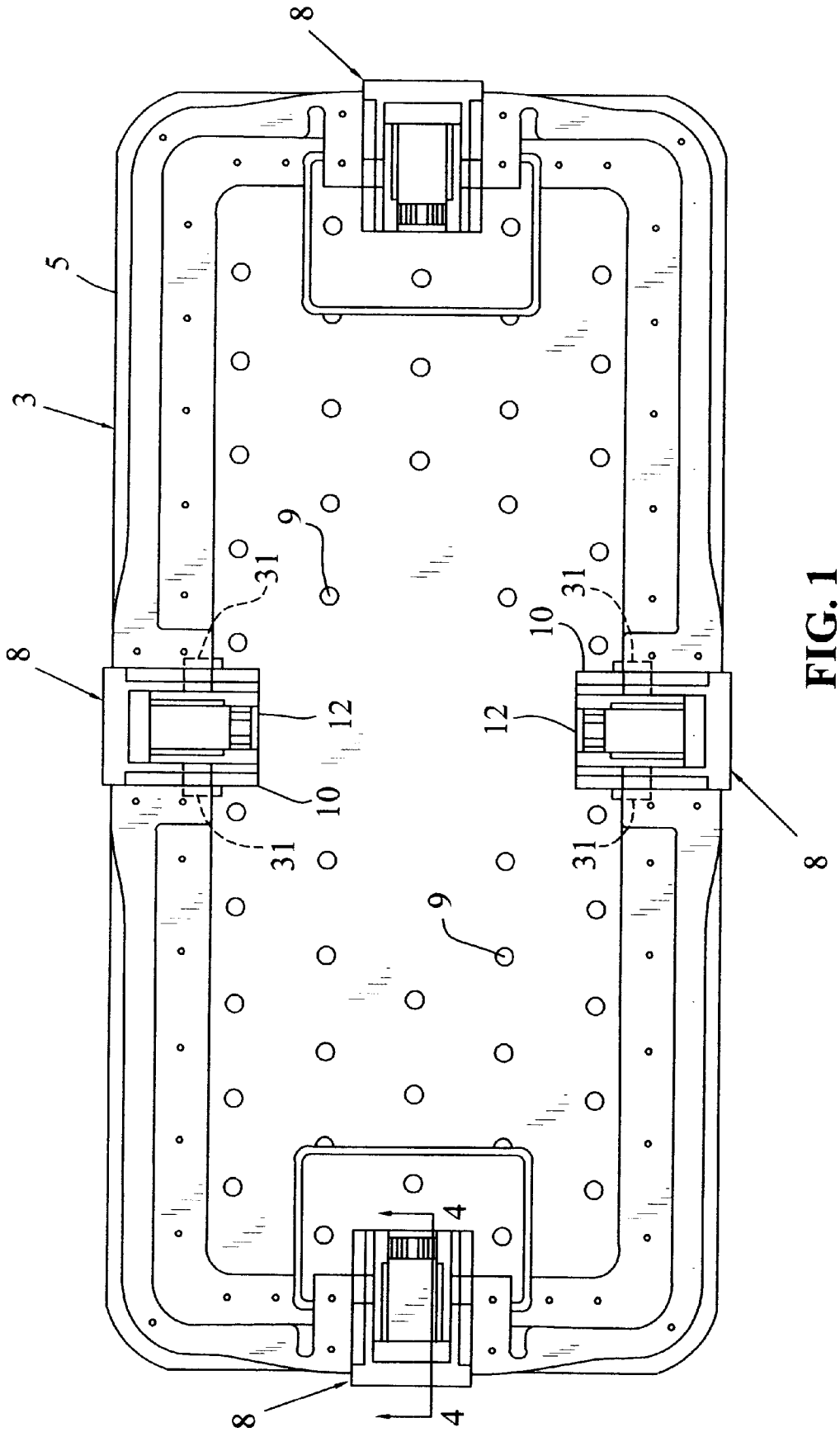

FIG. 1

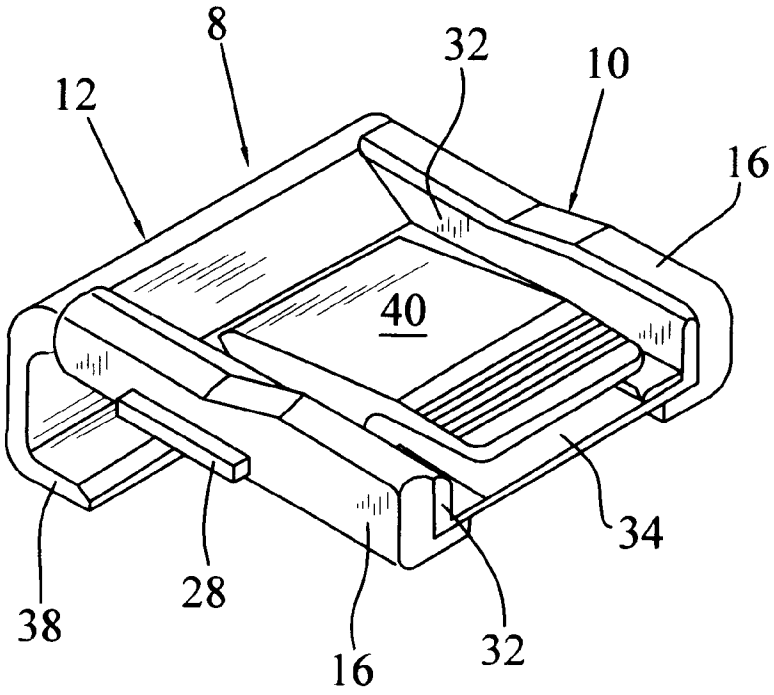

FIG. 2

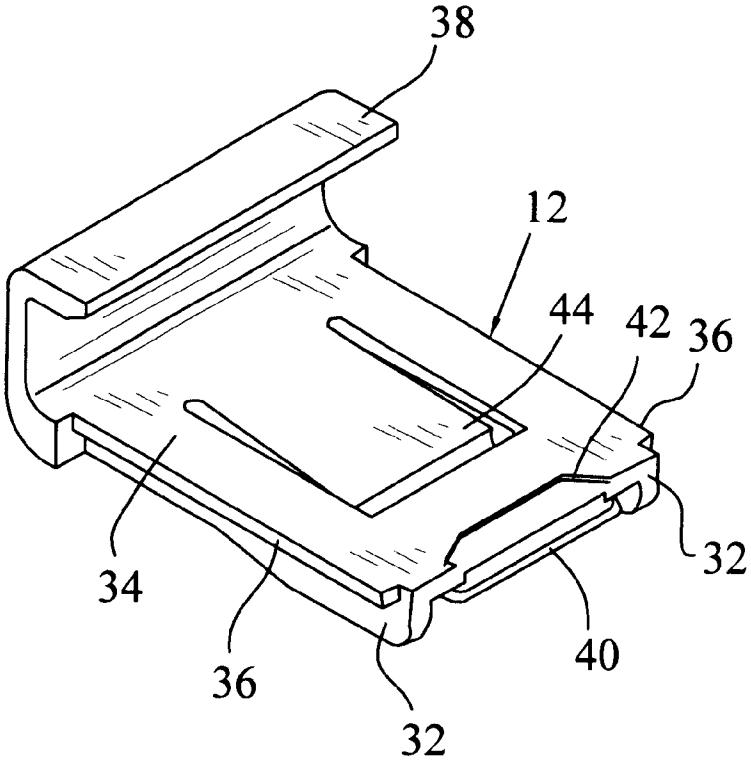

FIG. 9

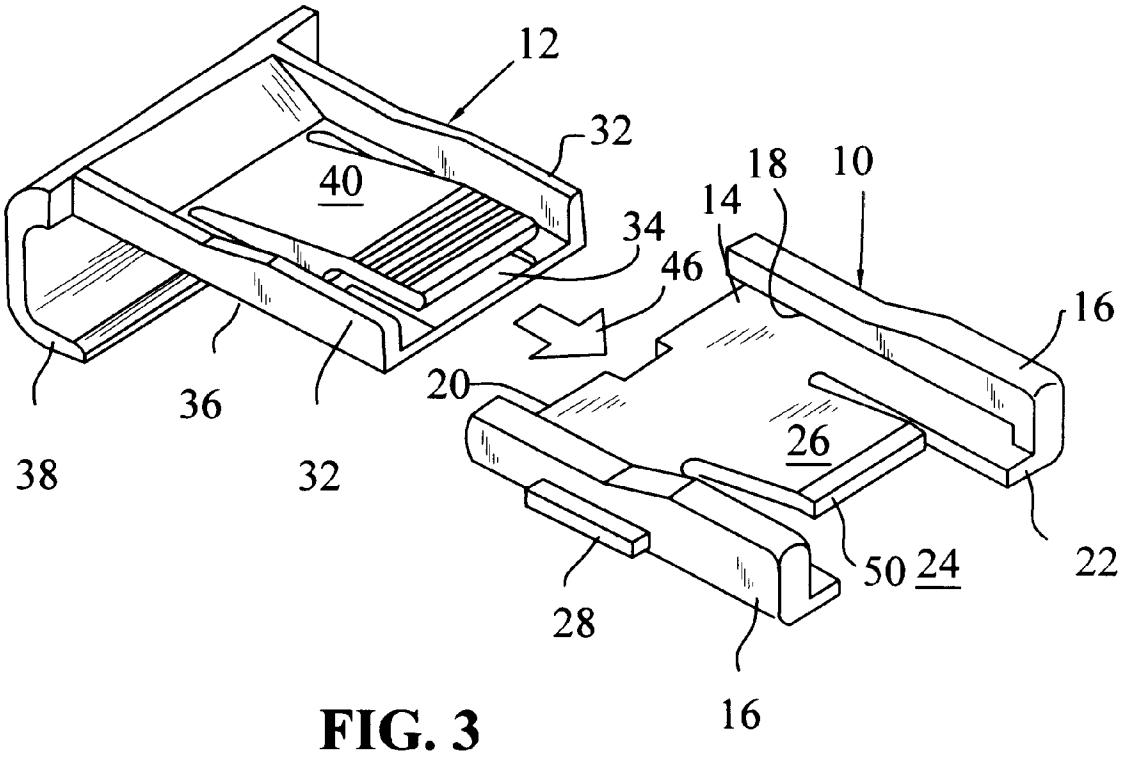

FIG. 3

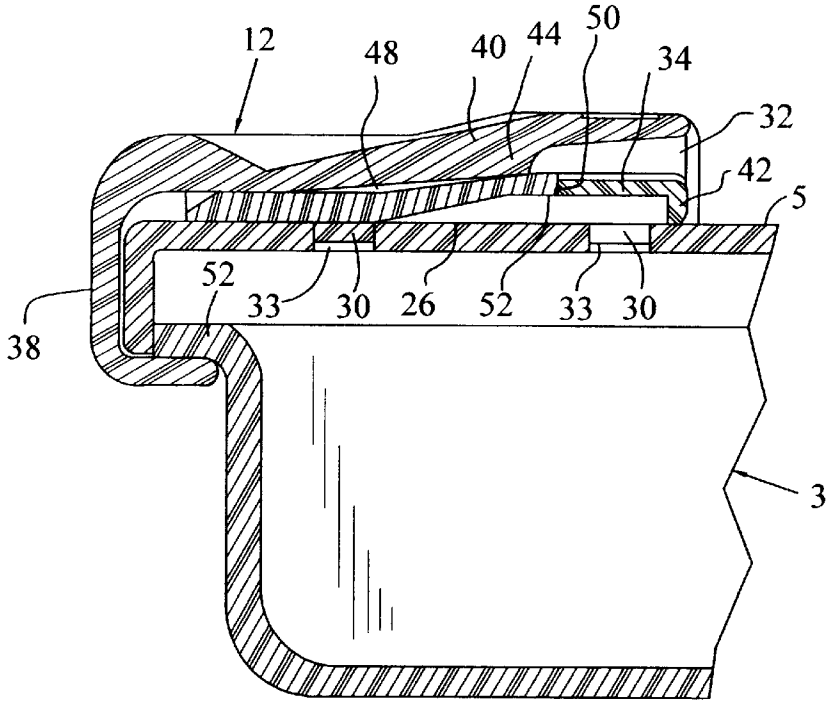

FIG. 4

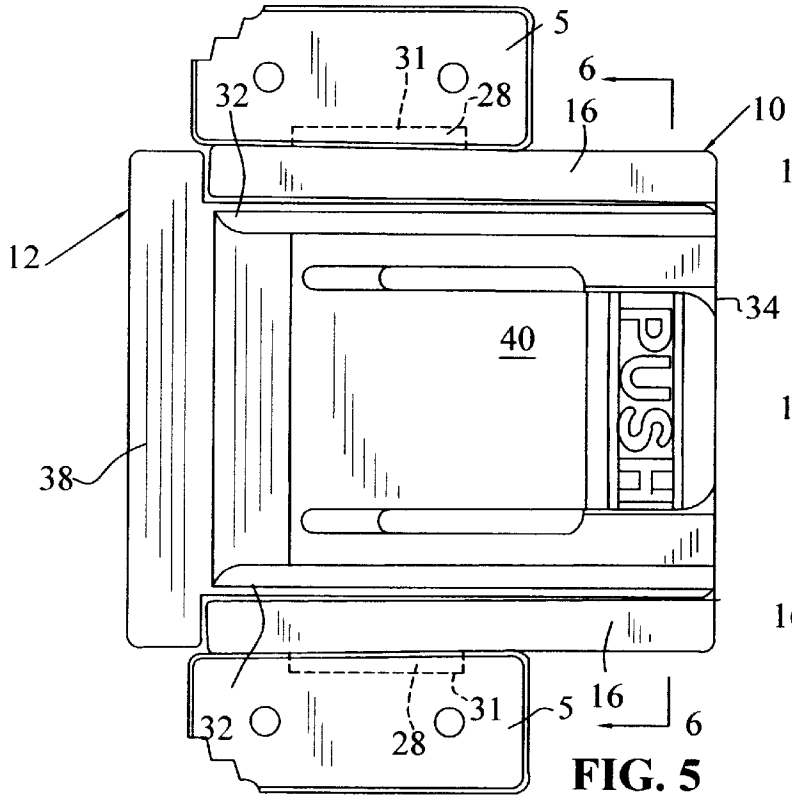

FIG. 5

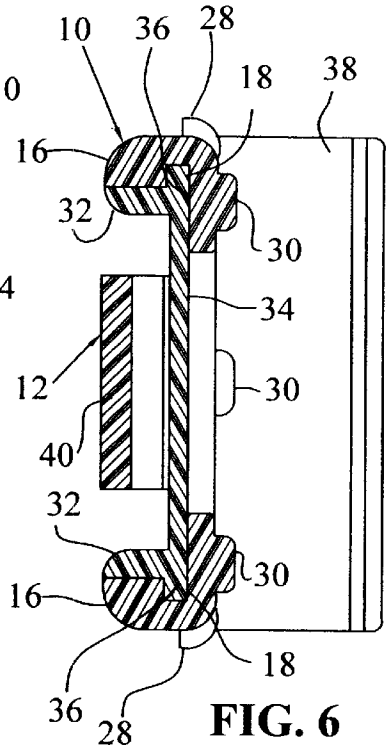

FIG. 6

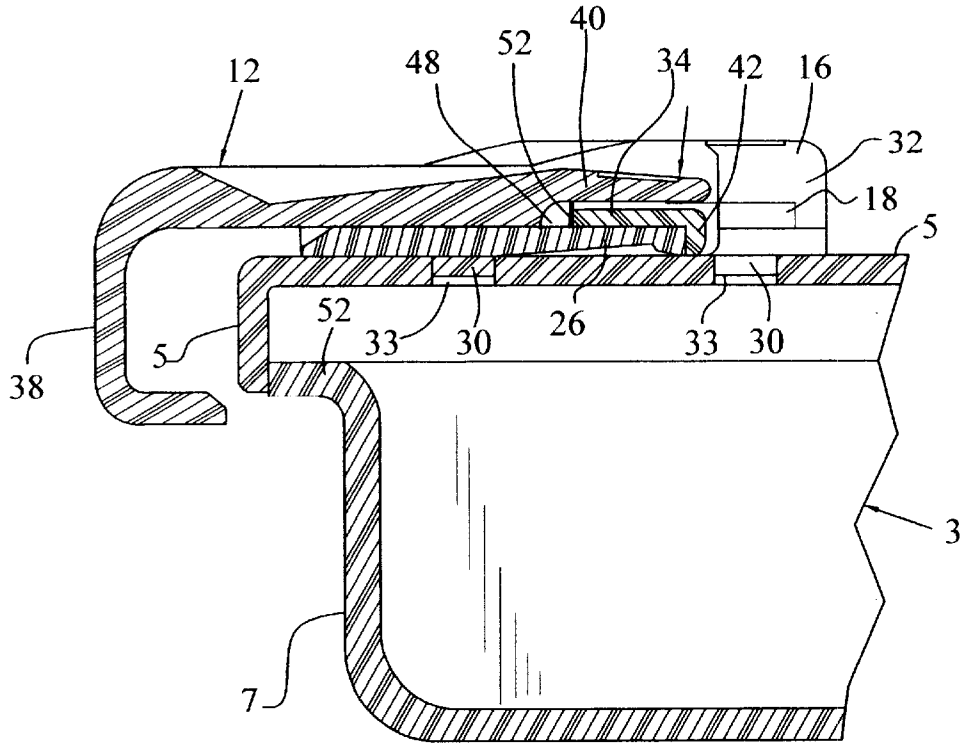
12
48
52
40
34
42
16
32
18
5
52
33
30
26
33
30
5
38
3
7

FIG. 7

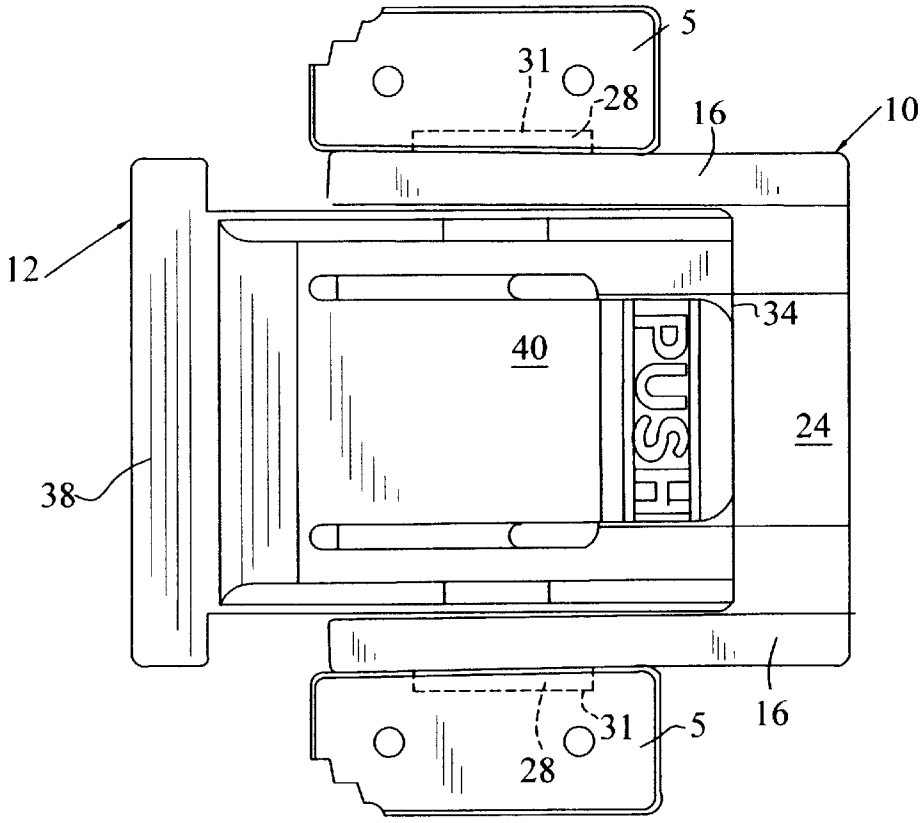
5
31
28
16
10
12
34
40
PUSH
24
38
16
31
5
28

FIG. 8

STERILIZATION CONTAINER FOR MEDICAL INSTRUMENTATION HAVING A SLIDING LATCH

This invention relates to a latching mechanism for the purpose of securing a lid to a container base and has specific but not limited application to a sliding latch usable with sterilization containers for such things as medical instrumentation.

Most latch mechanisms for sterilization containers and instrument containers are of metallic manufacture and generally of an over center type of operation. Some latches have sharpened edges which can cause tearing of a sterile barrier or a gloved hand and are not easily opened in medical situations where many times time is critical. In this invention a slide latch is provided. The latch includes a guide part which is secured to the lid of the container and an interfitting slide part which moves relative to the guide part. The slide part of the latch mechanism includes a depending inturned lip which when the slide part is retracted fits over the container base serving to secure the lid to the base. The guide and slide parts of the latch mechanism are preferably formed of an injection molded plastic such as polyphenylsulfone. The latch assembly may be of a specific color so as to identify the type of instrumentation or purpose of the container. Also, the latch mechanism can be easily and simply secured to the lid of the container by a snap fit interconnect.

Accordingly, it is an object of this invention to provide unique latching mechanism by which the lid may be secured to a base of a container.

Another object of this invention is to provide a sliding latch mechanism for a sterilization or medical instrumentation container.

Still another object of this invention is to provide a latch mechanism for a medical instrumentation container which is of economical construction.

And, still another object of this invention is to provide a sliding latch mechanism for a sterilization container which is of a simplified and reliable operation.

Other objects of this invention will become apparent upon a reading of the following description.

BRIEF DESCRIPTION OF THE DRAWINGS

A preferred embodiment of this invention has been chosen for purposes of illustration and description wherein:

FIG. **1** is a top plan view of a sterilization container showing the latch mechanisms of this invention in use.

FIG. **2** is a perspective view of a latch mechanism shown in assembled form.

FIG. **3** is a perspective view of a latch mechanism showing its components in separated form.

FIG. **4** is a fragmentary sectional view as seen along line **4**—**4** of FIG. **1** and showing the latch mechanism in its secured or closed position.

FIG. **5** is a top plan view of the latch mechanism shown in its closed or secured position.

FIG. **6** is a cross sectional view taken along line **6**—**6** of FIG. **5**.

FIG. **7** is a fragmentary sectional view like FIG. **4** but showing the latch mechanism in its open or unsecured position.

FIG. **8** is a top plan view of the latch mechanism shown in its open or secured position.

FIG. **9** is a perspective view of the guide part of the latch mechanism as seen from its underside.

DETAILED DESCRIPTION OF THE PREFERRED EMBODIMENT

A preferred embodiment of this invention has been chosen for purposes of illustration and description to enable one having an ordinary skill in the art to utilize the invention.

The latch mechanism **8** of this invention is shown in FIG. **1** being utilized upon a sterilization container **3**. Container **3** includes a top or lid **5** and a bottom or base **7** (FIG. **4**). The form and style of container **3** may vary but will consist of a base and an overfitting lid which may be of a metallic or plastic composition. Normally there is at least one latch mechanism **8** positioned along each side of the container so that the lid is securely fastened to the base on each of its sides. If the container is being utilized as a sterilization devise, there will be a plurality of openings **9** formed in the base and lid to allow for the escape and passage for the sterilization material such as steam.

Latch mechanism **8** includes a guide part **10** and interfitting slide part **12**. Guide part **10** is secured to lid **5** and includes a base **14** which extends between a pair of side rails **16**. Each of the side rails **16** forms in conjunction with base **14** a groove **18** which extends from the front **20** of the guide part to adjacent but slightly spaced inwardly from the rear **22** of the part. Base **14** of guide part **10** has a slot **24** which extends inwardly from rear **22**. A flap **26** which is connected to base **14** extends upwardly and over slot **24**. Flap **26** is of a flexible form which enables it to be depressed resiliently downwardly into slot **24**.

Guide part **10** may be secured to lid **5** by gluing, bonding, or ultrasonic welding. Preferably, though, the guide part is designed to be snap fitted and interlocked with the lid. This is accomplished by providing transversely extending tabs **28** which protrude from slide rails **16**. The underside of base **14** is provided with a plurality of posts **30**. Lid **5** is provided with opposed and spaced apart slots **31** (see FIGS. **5** and **8**) and openings **33** (see FIGS. **4** and **7**). The guide part is pressed downwardly upon lid **5** with its posts **30** aligning with openings **33** in the lid and with its tabs **28** snap fitting into slots **31** in the lid so as to interlock the guide part to the lid. The interfit between the tabs **28** and the receiving slots **31** in the lid prevent the guide part from being lifted from the lid and the posts **30** fitting into receiving openings **33** in the lid prevent the guide part from twisting or sliding relative to the lid.

Slide part **12** of latch mechanism **8** includes sides **32** which are interconnected by a web **34**. A rib **36** extends along each of the sides **32**. A depressible tongue **40** is carried by web **34** and protrudes or extends rearwardly relative to the slide part. Tongue **40** includes a depending protrusion **44**. Web **34** terminates in a depending lip **42** (FIGS. **4** and **9**). Slide part **12** also includes a forwardly located depending inturned lip **38**.

Slide part **12** is assembled to guide part **10** by positioning web **34** of the slide part on top of base **14** of the guide part at front **20** of the guide part with rails **36** fitting into grooves **18**. Slide part **12** is then slid rearwardly relative to the guide part in the direction of arrow **46** in FIG. **3** to cause rear lip **42** of the slide part to ride upwardly and over flap **26** of the guide part, causing the flap to be depressed until lip **42** is located rearwardly of the flap which allows the flap to spring upwardly interlocking the guide and slide parts together. This interlock between the slide part **12** and guide part **10** is best illustrated in FIG. **7** where it will be observed that flap **26** resides just under web **34** of the slide part in front of its depending rear lip **42**.

With the guide part **10** and slide part **12** now interlocked, the slide part now may be slid relative to the guide part

between its open position shown in FIG. **7** and its secured position shown in FIG. **4**. Starting in its open position as seen in FIG. **7**, slide part **12** is moved rearwardly relative to guide part **10** with ribs **36** being restrictively guided by grooves **18** in their respective parts. During the initial rearward movement of slide part **12** web **34** slides over depressed flap **26** until the slotted opening **48** in the web which accommodates tongue **40** reaches by the flap. At this time, the flap springs upwardly into opening **48** under tongue **40** as illustrated in FIG. **4** with the rearward most edge **50** of the flap **26** fitting adjacently in front of the front edge **52** of web **34** of the slide part so as to provide an abutment which prevents the slide part from being slid forwardly relative to the guide part, thus securing the slide part in its closed position as seen in FIG. **4** with its depending lip **38** extending about the periphery of lid **5** and underlying an out-turned peripheral flange **52** of base **7**. In this manner, slide part **12** secures the lid to the base and is interlocked to movement relative to its underlying guide part.

To open the latch mechanism, slide part tongue **40** which is in contact with raised flap **26** is depressed, which causes the flap to be depressed so that its edge **50** is located below edge **52** of the slide part web **34**. While still holding tongue **40** in its depressed position, slide part **12** may now be moved forwardly relative to the guide part **10** allowing web **34** to slide over the depressed flap **26** as shown in FIG. **7**. This movement of the slide part frees its lip **38** from its underlying engaging position relative to lid **5** and base **7** so as to permit the lid to be removed from the base. When slide part **12** is moved from its open position in FIG. **7** into its closed position in FIG. **4** there is no need to depress or otherwise manipulate tongue **40** since the normally upwardly biased or flexed flap **26**, once it clears the underside of web **34** of the slide part will normally spring upwardly into interlocking engagement with the web and with the tongue **44** being in its normally raised position. As slide part **12** interlocks into its closed or secured position as illustrated in FIG. **4**, a slight clicking sound will generally be heard as flap **26** springs upwardly and interlocks with web **34**.

Guide part **10** and slide part **12** are preferably formed of a plastic composition such as polyphenylsulfone and are of injection molded form. As previously suggested, the latch mechanism parts may be color coded for identification purposes.

The invention is not to be limited specifically to the details above given but may be modified within the scope of the appended claims.

What is claimed is:

1. A container for medical instrumentation comprising a base and an overlying removable lid, a latch mechanism secured to one of said base and lid, said latch mechanism including a guide part attached to said one base or lid and a slide part carried by said guide part shiftable relative to the guide part between a closed position engaging the other of said base and lid to secure the lid to the base and an open position separated from said other from said base or lid to free the lid for removal from the base, said guide part including a flexible flap first catch part, said slide part including a second catch part engaging said first catch part to lock said slide part against movement from its closed position into its open position, said slide part including a depressible tongue release part engagable with one of said first and second catch parts and contacting said first catch part when actuated by depressing said tongue release part to disengage the first and second catch parts and free the slide part for movement from its said closed position into its open position.

2. The container of claim **1**, wherein said flap has an upper position engaging said second catch part when said slide part is in its said closed position and a lower position disengaged from said second catch part when contacted by said tongue.

3. The container of claim **2**, wherein said flap is upwardly biased into its said upper position to enable the flap to engage said second catch part as said slide part shifts from its open position into its said closed position.

4. The container of claim **2**, wherein said guide part is attached to said lid, said slide part including a depending lip, said lip engaging said flap in its said lower position when said slide part is in its open position to prevent separation of the slide part from the guide part.

5. A container for medical instrumentation comprising a base and an overlying removable lid, a latch mechanism secured to one of said base and lid, said latch mechanism including a guide part attached to said lid and a slide part carried by said guide part shiftable relative to the guide part between a closed position engaging the other of by said base and lid to secure the lid to the base and an open position separated from said other from said base or lid to free the lid for removal from the base, said guide part including a first catch part, said slide part including a second catch part engaging said first catch part to lock said slide part against movement from its closed position into its open position, said slide part including a depressible tongue release part engagable with one of said first and second catch parts and contacting said first catch part when actuated to disengage the first and second catch parts and free the slide part for movement from its said closed position into its open position, said guide part including spaced outwardly projecting tabs, said lid including slotted parts, said tabs fitted into said slotted parts to secure said guide part to said lid.

6. The container of claim **5**, wherein said guide part includes depending posts, said lid having openings, said posts fitted into said openings when said tabs are fitted into said lid slotted parts.

7. A container for medical instrumentation comprising a base and an overlying removable lid, a latch mechanism secured to one of said base and lid, said latch mechanism including a guide part attached to said one base or lid and a slide part carried by said guide part, said slide part shiftable in its entirety relative to the guide part between a closed position engaging the other of said base and lid to secure the lid to the base and an open position separated from said other base or lid to free the lid for removal from the base, wherein said guide part is attached to said lid, said guide part including spaced outwardly projecting tabs, said lid including slotted parts, said tabs fitted into said slotted parts to secure said guide part to said lid.

8. The container of claim **7**, wherein said guide part includes depending posts, said lid having openings, said posts fitted into said openings when said tabs are fitted into said lid slotted parts.

9. A container for medical instrumentation comprising a base, an overlying removable lid, and a latch mechanism secured to one of said base and lid,

said latch mechanism including a guide part attached to one of said base or lid, a slide part carried by said guide part and shiftable relative to the guide part, and a depressible tongue for contacting a flexible catch part when said tongue is depressed to release said latch mechanism from a closed position securing the lid to the base to an open position,

said catch part being a flexible flap, which when so contacted by said tongue moves and is thereby disengaged from a second catch part,

wherein said depressible tongue is located on said slide part and said flexible catch part is located on said guide part.

10. The container of claim **9**, wherein said flap is upwardly biased into an upper position to enable said flap to engage said second catch part as said slide part shifts from an open position into said closed position.

11. The container of claim **10**, wherein said guide part is attached to said lid, said slide part including a depending lip, said lip engaging said flap in a lower position when said slide part is in its open position to prevent separation of the slide part from the guide part.

12. The container of claim **9**, wherein said guide part has spaced apart opposing grooves, said slide part including parallel ribs fitted slidably into said grooves.

13. The container of claim **9**, wherein said guide part is attached to said lid, said guide part including spaced outwardly projecting tabs, said lid including slotted parts, said tabs fitted into said slotted parts to secure said guide part to said lid.

14. The container of claim **13**, wherein said guide part includes depending posts, said lid having openings, said posts fitted into said openings when said tabs are fitted into said lid slotted parts.

* * * * *