David G. Barker (#024657)
Zachary G. Schroeder (#036226)
SNELL & WILMER L.L.P.
One East Washington Street
Suite 2700
Phoenix, Arizona 85004-2556
Telephone: 602.382.6000
Facsimile: 602.382.6070
E-Mail: dbarker@swlaw.com
zschroeder@swlaw.com

Timothy J. Ziolkowski (admitted *pro hac vice*)
Jacob M. Fritz (admitted *pro hac vice*)
ZIOLKOWSKI PATENT SOLUTIONS GROUP, SC
136 S. Wisconsin Street
Port Washington, WI 53074
Telephone: 262.268.8100
Facsimile: 262.268.8185
E-Mail: tjz@zpatents.com
jmf@zpatents.com

Attorneys for Plaintiff Champion Power Equipment, Inc.

Snell & Wilmer
L.L.P.
LAW OFFICES
One East Washington Street, Suite 2700
Phoenix, Arizona 85004-2556
602.382.6000

IN THE UNITED STATES DISTRICT COURT

FOR THE DISTRICT OF ARIZONA

Champion Power Equipment, Inc., Plaintiff/Counterdefendant, v. Firman Power Equipment Inc., Defendant/Counterplaintiff.	No. CV-23-2371-PHX-DWL **CHAMPION POWER EQUIPMENT, INC.'S OPENING CLAIM CONSTRUCTION BRIEF**

EX1011
HARBOR FREIGHT TOOLS
IPR2025-01463

Snell & Wilmer
L.L.P.
LAW OFFICES
One East Washington Street, Suite 2700
Phoenix, Arizona 85004-2556
602.382.6000

Table of Contents

I. INTRODUCTION 1

II. PRINCIPLES OF CLAIM CONSTRUCTION 1

III. OBJECTION TO FIRMAN'S LATE CONSTRUCTIONS 6

IV. OVERVIEW OF THE ASSERTED PATENTS 7

V. POSITA DEFINITION 7

VI. DISPUTED TERMS AND PROPOSED CONSTRUCTIONS — TERMS FOR WHICH FIRMAN HAS NO EXPERT TESTIMONY 8

A. "valve assembly" 8

B. "fuel valve" 11

C. (1) "[a] switch to change operation of the engine between gaseous fuel and liquid fuel" and (2) "[a] switch … to change operation of the engine between gaseous fuel and liquid fuel" 12

D. "prevent[s] actuation of the mechanical fuel valve" 13

"prevent the mechanical fuel valve from opening the liquid fuel line" 13

E. "simultaneously" 14

F. (1) "selectively control fuel flow to the dual fuel engine from a first fuel source through a first fuel line and a second fuel source through a second fuel line" and (2) "selectively control fuel flow to the … [generator / engine] from the liquid fuel source through the liquid fuel line and the pressurized fuel source through the gaseous fuel line" 15

G. "desired pressure" 16

H. "prevent[s] the . . . fuel source from coupling . . . and . . . permit[s] the . . . fuel source to couple" 17

VII. DISPUTED TERMS AND PROPOSED CONSTRUCTIONS — TERMS FOR WHICH FIRMAN HAS DISCLOSED EXPERT TESTIMONY 18

A. "selector switch" 18

B. "fuel lockout apparatus" 19

C. "electro-mechanical valve system" 20

D. "coupled to [verb]" 21

VIII. CONCLUSION 25

Snell & Wilmer
L.L.P.
LAW OFFICES
One East Washington Street, Suite 2700
Phoenix, Arizona 85004-2556
602.382.6000

I. INTRODUCTION

The Court should adopt Plaintiff Champion Power Equipment, Inc.'s ("Champion") proposed claim constructions for the disputed claim terms of the patents-in-suit[1] (the "Asserted Patents") and reject those proposed by Defendant Firman Power Equipment, Inc. ("Firman"). Champion's proposed constructions are the plain and ordinary meaning of the disputed terms in view of the intrinsic record, and are further bolstered by extrinsic evidence, including Champion's expert testimony. "If a claim term has plain and ordinary meaning, [the Court's] inquiry ends." *Power Integrations, Inc. v. Fairchild Semiconductor Int'l, Inc.*, 711 F.3d 1348, 1361 (Fed. Cir. 2013).

Firman's proposed constructions, on the other hand, violate some of the most basic tenets of claim construction, including the rule against importing limitations from a preferred embodiment into the claims and the doctrine of claim differentiation (including both the presumption that different claim terms have different meanings, and that different claims have different scope). Firman's proposed constructions, divorced from well-established patent law, are unsupported by intrinsic or extrinsic evidence (including expert testimony) and appear to be a litigation tactic to attempt to avoid a finding that Firman has willfully infringed the Asserted Patents.

II. PRINCIPLES OF CLAIM CONSTRUCTION

Courts construe the scope of patent claims as a matter of law. *Markman v. Westview Instruments, Inc.*, 517 U.S. 370, 391 (1996). Claim constructions form the basis for jury instructions to be used as jurors consider patent infringement. Because the starting point is that all the patent claims are presumed valid and that the claim language has its plain and ordinary meaning, not every term needs to be construed by the Court; only "fundamental disputes" about claim scope must be resolved, and only to the limited extent necessary:

---

[1] U.S. Patent No. 10,221,780 (the "'780 Patent"), No. 10,393,034 (the "'034 Patent"), No. 10,598,101 (the "'101 Patent"), No. 10,697,398 (the "'398 Patent"), No. 11,143,120 (the "'120 Patent"), No. 11,143,145 (the "'145 Patent"), No. 11,306,667 (the "'667 Patent"), No. 11,492,985 (the "'985 Patent"), No. 11,530,654 (the "'654 Patent"), No. 11,761,390 (the "'390 Patent"), No. 11,840,970 (the "'970 Patent"), No. 11,905,895 (the "'895 Patent"), and No. 11,905,896 (the "'896 Patent"). These are attached as Exhibits 1A through 1M.

> Although when the parties present a fundamental dispute regarding the scope of a claim term, it is the court's duty to resolve it, courts are not (and should not be) required to construe *every* limitation present in a patent's asserted claims. The purpose of claim construction is to resolve disputed meanings and technical scope, to clarify and when necessary to explain what the patentee covered by the claims, for use in the determination of infringement or invalidity. Accordingly, only those terms need be construed that are in controversy, and only to the extent necessary to resolve the controversy.

Promptu Sys. Corp. v. Comcast Corp., 92 F.4th 1372, 1380 (Fed. Cir. 2024) (cleaned up) (citing *O2 Micro Int'l Ltd. v. Beyond Inovn. Tech.* Co., 521 F.3d 1351, 1362 (Fed. Cir. 2008); *U.S. Surgical Corp. v. Ethicon, Inc.,* 103 F.3d 1554, 1568 (Fed. Cir. 1997); *Vivid Techs., Inc. v. Am. Sci. & Eng'g, Inc.*, 200 F.3d 795, 803 (Fed. Cir. 1999)). In some cases, once appropriate claim construction principles are followed, the court determines that there is no true controversy about the meaning, and then no construction is required. *See, e.g., Summit 6, LLC v. Samsung Elecs. Co.*, 802 F.3d 1283, 1291 (Fed. Cir. 2015) (The district court did not err in declining to construe the disputed term, which was itself "comprised of commonly used terms; each is used in common parlance and has no special meaning in the art. Because the plain and ordinary meaning of the disputed claim language is clear, the district court did not err by declining to construe the term."); *ActiveVideo Networks, Inc. v. Verizon Commc'ns, Inc.*, 694 F.3d 1312, 1326 (Fed. Cir. 2012) (finding that the district court did not err under *O2 Micro* in concluding that "superimposing" claim terms "have plain meanings that do not require additional construction"); *but see O2 Micro Int'l*, 521 F.3d at 1361 ("A determination that a claim term 'needs no construction' or has the 'plain and ordinary meaning' may be inadequate when a term has more than one 'ordinary' meaning or when reliance on a term's 'ordinary' meaning does not resolve the parties' dispute.")

Claim construction is a question of law for the Court. *Markman*, 517 U.S. at 391. Claim terms are given their plain and ordinary meaning as understood by a person having ordinary skill in the art (herein "POSITA"[2]) at the time of the invention. *Phillips v. AWH*

[2] Some courts call this a POSA or a PHOSITA. They are the same. "[T]he POS[IT]A is patent law's hypothetical, legal construct "akin to the 'reasonable person'" used as a reference in negligence determinations." *McCoy v. Heal Sys., LLC*, 850 F. App'x 785, 787–88 (Fed. Cir. 2021) (quoting *In re Rouffet*, 149 F.3d 1350, 1357 (Fed. Cir. 1998)). A POSITA is *not* the same as an expert, who often has more skill or knowledge than a

Snell & Wilmer L.L.P. LAW OFFICES One East Washington Street, Suite 2700 Phoenix, Arizona 85004-2556 602.382.6000

Corp., 415 F.3d 1303, 1312 (Fed. Cir. 2005) (en banc). The courts "presume that the terms in the claim mean what they say." *Power Integrations,* 711 F.3d at 1360 (Fed. Cir. 2013). "In some cases, the ordinary meaning of claim language as understood by a person of skill in the art may be readily apparent even to lay judges, and claim construction in such cases involves little more than the application of the widely accepted meaning of commonly understood words." *Phillips*, 415 F.3d at 1314; *Medicis Pharm. Corp. v. Acella Pharm. Inc.*, CV 10-1780-PHX-JAT, 2011 WL 810044 (D. Ariz. Mar. 2, 2011). "If the claim term has a plain and ordinary meaning, our inquiry ends." *Power Integrations, Inc.*, 711 F.3d at 1361.

Claim construction begins by examining the claim language itself because the claims define the invention. *Phillips*, 415 F.3d at 1312. This bears repeating: "It is the claims, not the preferred embodiments, that define the metes and bounds of the patentee's invention." *IQRIS Techs. LLC v. Point Blank Enters, Inc.*, 130 F.4th 998, 1004 (Fed. Cir. 2025) (citing *Phillips*, 415 F.3d at 1312, 1323). While the claims are read in view of the specification, importing a limitation from the specification into the claims has been deemed one of the "cardinal sins of patent law." *SciMed Life Sys., Inc. v. Advanced Cardiovascular Sys., Inc.*, 242 F.3d 1337, 1340 (Fed. Cir. 2001); *Hill-Rom Servs., Inc. v. Stryker Corp.*, 755 F.3d 1367, 1371 (Fed. Cir. 2014) ("[W]e do not read limitations from the embodiments in the specification into the claims.").

One common doctrine that helps resolve disputes about claim scope is called claim differentiation, which generally means that different words/phrases presumably mean different things, and a narrower limitation in a dependent claim shows that such limitation is *not* part of the independent claim from which it depends. "Under the doctrine of claim differentiation, it is presumed that different words used in different claims result in a difference in meaning and scope for each of the claims." *Clearstream Wastewater Sys., Inc. v. Hydro-Action, Inc.*, 206 F.3d 1440, 1446 (Fed. Cir. 2000). This presumption is at its

---

POSITA. Indeed, "[t]he legal definition of 'ordinary' skill for a POS[IT]A can be contrasted with one of 'expert' skill." *Id.* at 788 (citing *Env't. Designs, Ltd. v. Union Oil Co.*, 713 F.2d 693, 697 (Fed. Cir. 1983) (noting that a "person of 'ordinary skill in the art'" is not "the judge, . . . layman, or . . . those skilled in remote arts, or . . . geniuses in the art").

Snell & Wilmer L.L.P. LAW OFFICES One East Washington Street, Suite 2700 Phoenix, Arizona 85004-2556 602.382.6000

strongest "where the limitation sought to be 'read into' an independent claim already appears in a dependent claim."[3] *InterDigital Comm., LLC v. ITC*, 690 F.3d 1318, 1324 (Fed. Cir. 2012) (quoting *Liebel-Flarsheim Co. v. Medrad, Inc.*, 358 F.3d 898, 910 (Fed.Cir.2004)). Without the rule against importing a limitation from one claim into another, "the entire statutory and regulatory structure governing the drafting, submission, examination, allowance, and enforceability of claims would crumble." *D.M.I., Inc. v. Deere & Co.*, 755 F.2d 1570, 1574 (Fed. Cir. 1985). There is also "a presumption that two independent claims have different scope when different words or phrases are used in those claims." *Seachange Intern., Inc. v. C-COR, Inc.*, 413 F.3d 1361, 1368-69 (Fed. Cir. 2005).

"There are only two exceptions" to the general rule that claims are given their plain and ordinary meaning: "1) when a patentee sets out a definition and acts as his own lexicographer, or 2) when the patentee disavows the full scope of a claim term either in the specification or during prosecution." *Thorner v. Sony Comput. Entm't Am. LLC*, 669 F.3d 1362, 1365 (Fed. Cir. 2012) (emphasis added). "The standards for finding lexicography and disavowal are exacting." *Hill-Rom*, 755 F.3d at 1371. Regarding the first exception, "[t]o act as its own lexicographer, a patentee must *clearly* set forth a definition of the disputed claim term other than its plain and ordinary meaning" and must "*clearly* express an intent to *redefine* the term." *Thorner*, 669 F.3d at 1365 (quoting *Helmsderfer v. Bobrick Washroom Equip., Inc.*, 527 F.3d 1379, 1381 (Fed. Cir. 2008)) (emphasis added). As to the second exception, "[t]o disavow claim scope, the specification must contain

[3] An "independent" claim does not refer to any other claim number, and thus stands alone, while a "dependent" claim "depends" on an earlier claim(s) within the same patent, incorporating all the depended-upon limitations and adding other limitations. A hypothetical example could look like this:

Claim 1: A system comprising [structure A, structure B, and structure C].

Claim 2: The system of Claim 1, further comprising [structure D].

Claim 3: The system of Claim 2, wherein [structure D] is made of metal.

Here, Claim 1 is independent, and Claims 2 and 3 are dependent. In this example, under the doctrine of claim differentiation, because Claim 3 depends on Claim 2, the "made of metal" limitation that first occurs in Claim 3 means that "structure D" of Claim 2 need not be *necessarily* made of metal, and because "structure D" is not in Claim 1 at all, it would be improper to read in "structure D" as a limitation of Claim 1.

Snell & Wilmer
L.L.P.
LAW OFFICES
One East Washington Street, Suite 2700
Phoenix, Arizona 85004-2556
602.382.6000

'expressions of manifest exclusion or restriction, representing a clear disavowal of claim scope.'" *Retractable Techs., Inc. v. Becton, Dickinson & Co.*, 653 F.3d 1296, 1306 (Fed. Cir. 2011) (quoting *Epistar Corp. v. Int'l Trade Comm'n*, 556 F.3d 1321, 1335 (Fed. Cir. 2009)). The narrow limits of these two (and only) exceptions were recently emphasized by the Federal Circuit in *IQRIS*:

> [T]he patentee is free to choose a term and expect to obtain the full scope of its plain and ordinary meaning *unless* the patentee *explicitly* redefines the term or disavows its full scope.

130 F.4th at 1004 (emphasis added) (reversing the district court's interpretation that a "pull cord" must be directly pulled by a user—the action of "pulling" was improperly imported from the specification—because in the absence of inventor lexicography or express disavowal of claim scope, that limitation cannot be read into the claim). "The standard for disavowal is exacting, requiring clear and unequivocal evidence that the claimed invention includes or does not include a particular feature." *Id.*, 130 F.4th at 1005 (quoting *Poly-Am., L.P. v. API Indus., Inc.*, 839 F.3d 1131, 1136 (Fed. Cir. 2016)).

The patent's prosecution history may also be relevant to claim construction; however, claim amendments and statements by the patentee during prosecution do not limit the claims unless they reflect a "clear and unmistakable disclaimer" of claim scope. *Omega Eng'g v. Raytek*, 334 F.3d 1314, 1323 (Fed. Cir. 2003). Prosecution disclaimer does not attach "[w]hen the alleged disclaimer is ambiguous or amenable to multiple reasonable interpretations." *Core Wireless Licensing S.A.R.L. v. LG Elecs., Inc.*, 880 F.3d 1356, 1367 (Fed. Cir. 2018); *see also Maquet Cardio. LLC v. Abiomed Inc.*, --- F.4th ---, No. 2023-2045, 2025 WL 876718, at *10 (Fed. Cir. Mar. 21, 2025) (same).

Courts may consider extrinsic evidence such as expert testimony and dictionaries. *Phillips*, 415 F.3d at 1317. For instance, expert testimony can be used "to ensure that the court's understanding of the technical aspects of the patent is consistent with that of a [POSITA]." *Id.* at 1318. However, extrinsic evidence cannot be used to override the plain and unambiguous interpretation offered by the claim language and specification. *See Profectus Tech. LLC v. Huawei Techs. Co.*, 823 F.3d 1375, 1380 (Fed. Cir. 2016)

Snell & Wilmer
L.L.P.
LAW OFFICES
One East Washington Street, Suite 2700
Phoenix, Arizona 85004-2556
602.382.6000

("Extrinsic evidence may not be used to contradict claim meaning that is unambiguous in light of the intrinsic evidence.") (citations omitted); *Seabed Geosolutions (US) Inc. v. Magseis FF LLC*, 8 F.4th 1285, 1287 (Fed. Cir. 2021) ("If the meaning of a claim term is clear from the intrinsic evidence, there is no reason to resort to extrinsic evidence.").

These basic tenets of patent claim construction show that all of the disputed terms should be accorded their plain and ordinary meaning. The patentee has neither acted as its own lexicographer nor expressly disavowed any claim scope, and Champion's expert testimony on plain and ordinary meaning is unrebutted for all but four of the disputed terms. Rather than present legitimate disputes of the plain and ordinary meaning of the disputed claim terms, Firman repeatedly commits the cardinal sin of importing limitations from the specification into the claims and ignores the doctrine of claim differentiation. Applying these principles, the Court should reject Firman's approach to the disputed claim terms and confirm that the terms should be viewed with their plain and ordinary meaning or the alternative proposed constructions suggested by Champion below.

III. OBJECTION TO FIRMAN'S LATE CONSTRUCTIONS

Proposed claim construction exchanges were due on January 17, 2025, which was designed to give adequate time for the parties and their experts to consider the other parties' positions and prepare appropriately. [*See* ECF 105.] As of March 4, 2025, Firman's construction of "selector switch" was "a component whose positioning enables a subsequent user selection"; "fuel lockout apparatus" was "an apparatus whose positioning prohibits a subsequent user action necessary to enable a different fuel source"; and "electro-mechanical valve system" was "a system of one or more electrically controlled solenoid valves." [Ex. 2, Firman's March 5, 2025 redline showing changes from its previous proposal, at 1, 20–21, and 28.] Champion prepared accordingly. However, on March 5, 2025 (two days before expert reports and the joint claim construction statement were due), Firman changed its positions on these three terms (as reflected below) and then objected to Champion supplementing its expert report in response. This eleventh-hour change was prejudicial to Champion because it did not provide an adequate opportunity to address Firman's new

Snell & Wilmer
L.L.P.
LAW OFFICES
One East Washington Street, Suite 2700
Phoenix, Arizona 85004-2556
602.382.6000

positions (and Champion was forced to waste time and money addressing positions that Firman now desires to abandon). Champion served a supplemental expert report on March 14, 2025, to address Firman's late-disclosed positions. Based on Firman's late disclosure and the prejudice caused to Champion, Champion requests that Firman's late-disclosed constructions be stricken.[4]

IV. OVERVIEW OF THE ASSERTED PATENTS

The Asserted Patents relate generally to multi-fuel portable generators, and the switching of fuels. Multi-fuel portable generators can run on more than one fuel source to create electricity. Typically, they can run on liquid fuel such as gasoline or gaseous fuels such as propane or natural gas. The ability to switch between different fuel types provides consumers with the option to use fuels that may be more convenient or produce a higher power output (e.g., gasoline) or fuels that are cleaner (e.g., propane and natural gas).

Examples include: a multi-fuel generator that can have a fuel selector that switches between two fuels. The fuel selector interacts with components such as switches, solenoids, and valves to control which of the different fuels flow to an engine of the multi-fuel generator. Different types of valves in the multi-fuel generator can be mechanical valves or electro-mechanical valves, for example. In one example, a multi-fuel generator can have a mechanical fuel lockout switch that is used to selectively control which fuel flows to the engine from one of the fuel sources. Other components of the multi-fuel generator may include, for example, an engine, a pressure regulator, and an alternator. The components are coupled in a manner that facilitates the desired functionality of the multi-fuel generator.

V. POSITA DEFINITION

Champion's expert witness, William Singhose, Ph.D., has offered an opinion on the skill level for a POSITA that the Court should adopt. [First Supplemental Expert Report of William Singhose, March 14, 2025, attached hereto as Exhibit 3 (the "Singhose Report") at

[4] If they are not stricken, basic fairness should—at a minimum—compel the Court to overrule Firman's objections to Champion's March 14, 2025 supplemental expert report that was necessitated by Firman's untimely disclosed constructions. Regardless, Champion's March 7 report is sufficient for the Court to find plain meaning for all terms.

Snell & Wilmer L.L.P. LAW OFFICES One East Washington Street, Suite 2700 Phoenix, Arizona 85004-2556 602.382.6000

Snell & Wilmer
L.L.P.
LAW OFFICES
One East Washington Street, Suite 2700
Phoenix, Arizona 85004-2556
602.382.6000

¶¶ 28–35.][5] In summary, Dr. Singhose opines that the claimed subject matter in the Asserted Patents can be compared to subject matter typically taught in the relevant curricula for mechanical engineering or a closely related field. [*Id.* ¶ 29.] Thus, a POSITA would have a four-year degree in mechanical engineering or a closely related field and at least one year of experience designing, developing, servicing, or operating fuel-powered machinery. [*Id.* ¶ 29.] Additional education could substitute for professional experience and significant work experience—such as working with, servicing, or operating such machinery in the field—could substitute for formal education. [*Id.* ¶ 30.] Dr. Singhose's senior year mechanical engineering students complete a capstone design project wherein they usually design, construct, and demonstrate a prototype product, and such prototypes often utilize switches, valves, and various mechanical assemblies comparable to the subject matter of the Asserted Patents. [*Id.* ¶ 33.] Therefore, mechanical engineering students would be able to understand and practice most of the claimed features, as well as how those features would be combined and operate. [*Id.*] An additional year[6] of experience addresses components of such systems, like carburetors with float bowls, not usually taught at the undergraduate level. [*Id.* ¶ 34.] This POSITA definition applies to all the Asserted Patents. [*Id.* ¶ 28.]

VI. DISPUTED TERMS AND PROPOSED CONSTRUCTIONS — TERMS FOR WHICH FIRMAN HAS <u>NO EXPERT TESTIMONY</u>

A. "valve assembly"

[5] Dr. Singhose disclosed this supplement on March 14, 2025 to address Firman's untimely disclosed claim constructions (*see* Section III, above). Paragraphs 1–141 of the Singhose Report are identical to the paragraphs of his original report served March 7, 2025, attached as Exhibit 4. For simplicity, Champion will cite only to Exhibit 3. Dr. Singhose is expected to testify at the Claim Construction Hearing consistent with his expert reports (Exhibits 3 and 4) including that those exhibits are true and correct copies of his expert reports. His qualifications are laid out in Paragraphs 3–15 of his report (and his CV attached thereto).

[6] Firman's expert, Dr. Jacobs, proposes a POSITA requiring *eight years* of experience *plus* an undergraduate degree. But he only worked on one dual-fuel engine (although he does not remember what it was), does not personally have eight years' experience working on dual-fuel engines, and never worked in industry after starting formal education. [Jacobs Deposition, Exhibit 5, at 43:7–12, 44:17–25, 46:17–21.] Dr. Singhose, on the other hand, graduated from MIT and has worked in industry. [Ex. 3 at Ex. A, pages 2–4.] There is no support for Firman's POSITA definition.

’101 Patent Claims 17 and 18; ’667 Patent Claims 1–3, 10, and 12–15; ’390 Patent Claims 3–7; and ’896 Patent Claims 21, 25–28, 30–32	
Champion’s Proposed Construction	**Firman’s Proposed Construction**
Plain and ordinary meaning	an assembly including a fuel valve and handle that are separate and distinct from the selector switch

First, Firman proposes *adding* a limitation of a “handle” into the construction of a “valve assembly” when “handle” does not appear in the claims. Second, these claims do not state components are “separate and distinct from the selector switch.” The claims speak for themselves and show that Firman’s construction is untenable under the law.

For example, Claim 17 of the ’101 Patent claims, inter alia, a “valve assembly positioned on or adjacent the selector switch,”[7] which inherently contradicts Firman’s proposal that they be “separate and distinct.” Indeed, the “valve assembly” is said to be “on . . . the selector switch,” so they are not necessarily “separate” nor “distinct.” Firman is clearly attempting to force the claims to be read *only* on a preferred embodiment. As another example, Claim 1 of the ’667 Patent claims “a selector switch positioned on the valve assembly . . .,” again cutting against Firman’s argument about being “separate” and “distinct.” A rabbit may have ears that are said to be “on” the rabbit or “on” its head, but to say that the ears are “separate” and “distinct” from the rabbit or its head is illogical and not the ordinary meaning. Claim 10 of the ’667 Patent is yet another example where the “valve assembly” and the “selector switch” are not called out by the patentee to have any such “separate and distinct” relationship. And Claim 14 of the ’667 Patent demonstrates a case where the “valve assembly” and “selector switch” can be related by a “corresponding operation,” but certainly does not require them to be “separate and distinct.”[8]

Also, demonstrating Firman’s attempt to read preferred embodiments into the claims is Firman’s desire to require a “handle” in the “valve assembly” where the patentee clearly did not require it. Claim 10 of the ’101 Patent separately refers to “a valve assembly” and

[7] Similar “on or adjacent” phrasing occurs in the ’390 Patent, Claim 4.

[8] Similar “corresponding operation” phrasing occurs in the ’390 Patent, Claim 6.

Snell & Wilmer
L.L.P.
LAW OFFICES
One East Washington Street, Suite 2700
Phoenix, Arizona 85004-2556
602.382.6000

Snell & Wilmer
L.L.P.
LAW OFFICES
One East Washington Street, Suite 2700
Phoenix, Arizona 85004-2556
602.382.6000

"at least one valve handle positioned on and operably connected to the valve assembly . . . ." Therefore, the "valve assembly" itself cannot be defined to have a handle because the patentee used separate language to call out when a handle is required. As another example, Claim 29 of the '896 Patent further limits dependent Claim 28 (depending from independent Claim 21 through dependent Claim 26), which has a "valve assembly," by further claiming "a first valve handle" and "a second valve handle." The fact that dependent Claim 29 specifically adds "handle[s]" means the claims from which it depends are not required to have handles. Otherwise, Claim 29 would be meaningless. For at least these reasons, under the doctrine of claim differentiation, "valve assembly" cannot be construed as *necessarily* "including a . . . handle." A "valve assembly" may include a handle, but it is not required.

Firman's faulty construction invites this Court to make the same error that caused the Federal Circuit to reverse the district court's claim construction in *IQRIS Techs. LLC*, 130 F.4th at 1004. There, the district court improperly interpreted "pull cord" as needing to be "directly pulled" by the user (improperly reading preferred embodiments into the claims) and that "pull cord" excludes cords with handles. *Id.* at 1003. Referring to plain and ordinary meaning, and absence of lexicography or disavowal of claim scope, the patentee argued that (1) the claims do not specify (and thus are not limited to) pulling directly or indirectly, and (2) the claims were silent about whether the pull cord could have a handle or not. *Id.* at 1003–04. Applying the correct law, the Federal Circuit agreed with the patentee that the claim *did not require* a handle (nor the absence of a handle) and *was not limited* to "direct" pulling, "[e]ven when all embodiments in the written description depict a pull cord that is directly pulled." *Id.*

Similarly here, the Court should not commit the same error by requiring that the valve assembly have a handle in any claim that does not expressly require "a handle," or that the "valve assembly" be "separate and distinct" from a selector switch. The Court should adopt the plain and ordinary meaning of "valve assembly."

Finally, and while extrinsic evidence is certainly not necessary for this term (and Firman has not explained why any extrinsic evidence would be relevant here), Firman's

Snell & Wilmer
L.L.P.
LAW OFFICES
One East Washington Street, Suite 2700
Phoenix, Arizona 85004-2556
602.382.6000

own expert could not even testify as to what a "valve" is, let alone what one "requires". [Ex. 5, at 20:11–21; *cf.* Ex. 3 ¶¶ 137–38.] Unable to describe a "valve", Firman's "expert" is not qualified to provide credible testimony in this field. *See also, e.g., Iris Connex, LLC v. Dell, Inc.*, 235 F. Supp. 3d 826, 848 (E.D. Tex. 2017) (issuing sanctions against party that "advanced a claim construction divorced from the specification and claim language, ignored the file history, contravened Federal Circuit law, relied heavily on extrinsic evidence to the exclusion of the intrinsic evidence, and asked the Court to adopt a construction that simply did not make any sense.")

For the foregoing reasons, the Court should adopt plain and ordinary meaning and reject Firman's tortured construction that violates claim construction principles.

B. "fuel valve"

'101 Patent Claim 18; '667 Patent Claims 3 and 15; '390 Patent Claim 7; '896 Patent Claims 28 and 32	
Champion's Proposal	**Firman's Proposal**
Plain and ordinary meaning	a mechanical fuel valve

Firman commits the cardinal sin by importing a limitation ("mechanical") from the specification into claims where it does not exist. Worse, Firman's construction also violates the doctrine of claim differentiation. "Under the doctrine of claim differentiation, it is presumed that different words used in different claims result in a difference in meaning and scope for each of the claims." *Clearstream Wastewater Sys., Inc.*, 206 F.3d at 1446. There is also "a presumption that two independent claims have different scope when different words or phrases are used in those claims." *Seachange Intern., Inc.*, 413 F.3d at 1368–69.

Referring to Claim 18 of the '101 Patent, the word "mechanical" is wholly absent. However, because dependent Claim 19 adds the "mechanical" limitation to the valves of Claim 18, it necessarily means that Claims 18's valves need not be mechanical.

As to Claim 3 of the '667 Patent, since Claim 4 further limits valves of Claim 3 to "non-solenoid, mechanical valves," Claim 3 cannot be read to have that limitation. As to Claim 7 of the '390 Patent, Claim 14 is similarly structured, and since Claim 15 further defines the valves as mechanical, then neither Claim 14 nor 7 can be so limited. Similarly,

in the '896 Patent, Claim 34 further defines the valves as being mechanical, so to argue that any other claim requires valves to be mechanical would render Claim 34 superfluous.

Thus, in the absence of express claim language that a claimed fuel valve is mechanical, a fuel valve may or may not be mechanical. *See IQRIS*, 130 F.4th at 1003–04. [S*ee also* Ex. 3 ¶¶ 71–73 (fuel valve may or may not be mechanical).] Accordingly, the Court should adopt plain and ordinary meaning and reject Firman's invitation to add the word "mechanical" to every occurrence of "fuel valve."

C. (1) "[a] switch to change operation of the engine between gaseous fuel and liquid fuel" and (2) "[a] switch … to change operation of the engine between gaseous fuel and liquid fuel"

'398 Patent Claims 1 and 57; '145 Patent Claim 1	
Champion's Proposal	**Firman's Proposal**
Plain and ordinary meaning	non-limiting intended use

Firman's "non-limiting intended use" position is frivolous because this doctrine is applied only (if at all) to claim preamble language; the at-issue language is not in the claims' preambles. *See Acceleration Bay, LLC v. Activision Blizzard Inc.*, 908 F.3d 765, 770 (Fed. Cir. 2018) ("*Because the terms at issue appear in preambles*, we must determine whether the terms are limitations.") (emphasis added); *see also In re Fought*, 941 F.3d 1175, 1179 (Fed. Cir. 2019) (rejecting argument that "travel trailer" in the preamble of a claim was a "non-limiting intended use," holding it was as a "structural limitation of the claim"). If it is not in a preamble, there is no valid argument that the claimed structure would be "non-limiting"; there is no legal support for Firman's position, and the inquiry can stop here.

Stated differently, Firman asks the Court to excise this element from the claims, which is improper. *See Pause Tech., LLC v. TiVo, Inc.*, 419 F.3d 1326, 1334 (Fed. Cir. 2005) ("In construing claims, however, we must give each claim term the respect that it is due."); *Strattec Sec. Corp. v. Gen. Auto. Specialty Co.*, 126 F.3d 1411, 1417 (Fed. Cir. 1997) (holding that it was legal error for the district court to instruct the jury that the claim term "sheet" was not properly considered part of the claim); *Exxon Chem. Patents, Inc. v. Lubrizol Corp.*, 64 F.3d 1553, 1557 (Fed. Cir. 1995) ("We must give meaning to all the

Snell & Wilmer
L.L.P.
LAW OFFICES
One East Washington Street, Suite 2700
Phoenix, Arizona 85004-2556
602.382.6000

Snell & Wilmer
L.L.P.
LAW OFFICES
One East Washington Street, Suite 2700
Phoenix, Arizona 85004-2556
602.382.6000

words in Exxon's claims."). Among other flaws in this approach, Firman wrongly reads "switch" as a verb (an action) as opposed to a noun (a thing). Since the claim calls for "a" switch, it is clearly a "thing"—a noun—and therefore is a structural limitation to the claim. A cursory review of '398 Patent Claim 1 shows a list of each physical object as a separate paragraph – an engine, a switch, a carburetor... etc. And, in the final clause, the claim refers to "actuation of the switch." Clearly, switch is used here as a noun, a thing, subject to "actuation"; it is not an imaginary "non-limiting use." Example embodiments even contain a reference numeral, switch 38, which is referenced more than 30 times throughout the specifications of the '398 and '145 Patents and has two figures dedicated to its placement according to certain embodiments – FIG. 2 and FIG. 3.

Dr. Singhose opines that a POSITA would accord these terms their plain and ordinary meaning consistent with and understood in light of the specification and claim language, which includes a physical structure arranged to allow a fuel selection. [Ex. 3 ¶ 111.] Switches that change the operating mode of machines are common, and a POSITA would be aware of several such switches that would be appropriate for the claimed technology, such as dial switches used by many cars to change the operation of the car from parked, to reverse, to forward travel. [*Id.* ¶ 112.] The Court should reject Firman's contention that this is a "non-limiting intended use," and adopt plain and ordinary meaning.

D. "prevent[s] actuation of the mechanical fuel valve"

'780 Patent Claims 2, 8, and 15; '895 Patent Claims 2 and 8	
Champion's Proposal	**Firman's Proposal**
Plain and ordinary meaning	prevent[s] the mechanical fuel valve from moving

"prevent the mechanical fuel valve from opening the liquid fuel line"

'654 Patent Claim 7; '970 Patent Claims 5, 27, and 51; '895 Patent Claim 15	
Champion's Proposal	**Firman's Proposal**
Plain and ordinary meaning	prevent[s] the mechanical fuel valve from moving

The main flaw in Firman's position for these two separate claim terms is that these are two clearly different phrases and Firman wants them to have an identical meaning. "Under the doctrine of claim differentiation, it is presumed that different words used in

Snell & Wilmer
L.L.P.
LAW OFFICES
One East Washington Street, Suite 2700
Phoenix, Arizona 85004-2556
602.382.6000

different claims result in a difference in meaning and scope for each of the claims." *Clearstream Wastewater Sys., Inc.*, 206 F.3d at 1446. There is also "a presumption that two independent claims have different scope when different words or phrases are used in those claims." *Seachange Intern., Inc.*, 413 F.3d at 1368–69.

Also implicit in Firman's position is that "actuat[ing]" and "opening" are both identical to the word "moving." But that is facially false, and Firman gives no support for this construction. Moreover, "moving" presents even more confusion, not less. These are portable generators with tires and wheels—designed to "move" from place to place. If the generator were on a "moving" truck, is the valve "moving"? Firman's construction creates more questions than answers. Meanwhile, it seems clear that a valve could hypothetically "move" at some level without "opening the liquid fuel line" (as in one of the phrases) or "actuation" as in the other phrase (e.g., the valve could vibrate during the generator's operation without "opening the liquid fuel line" or "actuating"). A valve could also be "moving" to a closed position, which is not equal to "opening" the fuel line. While maybe "moving" could have an understandable meaning in some hypothetical scenario, it is not the term the patentee chose to use here; if the patentee meant to say it wanted to prevent something from "moving," it could easily have used that word. [*See* Ex. 3 ¶ 79.]

For the foregoing reasons, the Court should adopt plain and ordinary meaning and reject Firman's tortured construction that violates claim construction principles.

E. "simultaneously"

'780 Patent Claim 6; '895 Patent Claims 6 and 12; '034 Patent Claim 6	
Champion's Proposal	**Firman's Proposal**
Plain and ordinary meaning, which includes two or more acts occurring over an overlapping time period; alternatively, two or more acts occurring over an overlapping time period.	concurrently

Firman's proposal to redefine "simultaneously" to "concurrently" only creates more confusion and yet another term to define (*i.e.*, what does "concurrently" mean?). Firman's proposal adds no clarity whatsoever.

In the first three of the four cited instances of the term, the patentee used the term

Snell & Wilmer
L.L.P.
LAW OFFICES
One East Washington Street, Suite 2700
Phoenix, Arizona 85004-2556
602.382.6000

in the negative–that is, to "prevent simultaneous" fuel delivery or to "not simultaneously" deliver fuel. In the last, Claim 6 of the '034 Patent, it is used to call for the timing of the liquid cutoff solenoid—"wherein activating the gaseous cutoff simultaneously activates the liquid cutoff solenoid."

A POSITA knows that mechanical components such as valves cannot be instantly moved at an exact instant in time. [Ex. 3 at ¶¶ 105–06.] Newton's laws of motion dictate that such motions require some time. The patentee recognized that when it stated: "to prevent, or substantially prevent, simultaneous fuel delivery of the liquid fuel and the gaseous fuel to the engine." ['034, Col. 9, lns. 6–10.] As such, a POSITA knows that the motions of all matter are subject to "time constant" limitations. [Ex. 3 at ¶¶ 105–06.] Each component, and the systems that they form when combined together, require certain time periods to transition from one state to another. [*Id.*] Given this knowledge, a POSITA would view the use of "simultaneously" as indicating that two or more acts are occurring over or during an overlapping time period, but not at any exact moment in time. [*Id.*]

Firman's proposal, "concurrently," is a term that does not appear anywhere in the specifications for the claims at issue. Moreover, Firman's proposal violates the laws of physics in requiring two events to occur "concurrently"—over any exact moment in time. [*Id.* ¶ 106.] Thus a POSITA would not understand the term to have this meaning.

F. (1) "selectively control fuel flow to the dual fuel engine from a first fuel source through a first fuel line and a second fuel source through a second fuel line" and (2) "selectively control fuel flow to the … [generator / engine] from the liquid fuel source through the liquid fuel line and the pressurized fuel source through the gaseous fuel line"

'780 Patent Claims 1 and 15[9]; '985 Patent Claims 5 and 15; '654 Patent Claims 1 and 6; '970 Patent Claims 1, 12, 20, and 44; and '895 Patent Claims 1, 8 and 14	
Champion's Proposal	**Firman's Proposal**
Plain and ordinary meaning	a portion of the mechanical fuel valve mechanically blocks fuel flow from one fuel source while unblocking fuel flow from a second fuel source

While the patentee describes in detail how certain valves work in the Detailed

[9] Firman asserts that the '780 Patent Claim 8 includes a variation of these terms, and Champion disputes that assertion.

Snell & Wilmer
L.L.P.
LAW OFFICES
One East Washington Street, Suite 2700
Phoenix, Arizona 85004-2556
602.382.6000

Description of the Preferred Embodiment section of the specifications of its patents, consistent with its duty to teach how to practice the inventions, including describing blocking and unblocking functions, the patentee *never* used either "block" or "unblock" in any of the claims. To read such limitations into the claims for these simple phrases that contain no complex words violates the well-settled rule that "while the claims are read in view of the specification, importing a limitation from the specification into the claims has been deemed one of the 'cardinal sins of patent law.'" *SciMed Life Sys.*, 242 F.3d at 1340.

Further, Dr. Singhose opines that a POSITA would not understand these terms in the way Firman proposes, because Firman's proposed construction adds extraneous limitations that are not supported by the Asserted Patents, the Asserted Claims, or the prosecution history. [Ex. 3 ¶ 99.] Specifically, Firman's proposed construction converts a requirement of "selectively control" to a meaning indicating "blocking and unblocking." "Blocking" is not equivalent to "selectively controlling" because the term "blocking" can mean completely stopping. [*Id.*] On the other hand, "controlling" can certainly include blocking, but also includes increasing and decreasing by various desired amounts. [*Id.*] By importing words like "mechanical" and "unblocking" into the claims without any support, Firman violates basic claim construction principles. *See, e.g., SciMed Life Sys.*, 242 F.3d at 1340; *Hill-Rom*, 755 F.3d at 1371.

G. "desired pressure"

'985 Patent Claim 1; '654 Patent Claims 1, 6, and 10; '970 Patent Claims 1, 12, 14, and 20; '895 Patent Claim 14; '034 Patent Claims 11 and 24; '120 Patent Claim 12	
Champion's Proposal	**Firman's Proposal**
Plain and ordinary meaning, including any pressure enabling engine operation; alternatively, any pressure enabling engine operation	pressure at which the engine operates

A POSITA reading this claim term in light of the relevant specifications would understand that operating an engine (or generator) is a desirable outcome of the claimed inventions; the claims themselves state as much. [Ex. 3 ¶¶ 62–65.] Therefore, the plain and ordinary meaning of "desired pressure" would contemplate a pressure for the fuel that,

when presented in the context of the remaining limitations of the claim (e.g. "for delivery through the gaseous fuel line"), *would enable engine operation*. Firman's proposal, "pressure at which the engine operates," is confusing because it erroneously suggests that there is one such pressure, or worse, that the pressure is in reference to the *engine* as opposed to the *fuel* being delivered to the engine. The salient condition is any pressure that, when presented for delivery through the gaseous fuel line as claimed, *enables* the engine (or generator) to operate. In the context of the claims, Champion's plain and ordinary meaning proposal makes sense.[10]

The language, "desired pressure . . . to operate the engine" directly contradicts Firman's proposed construction that replaces the patentee's choice of language "to operate" with the more restrictive and physically nonsensical phrase "at which." Accordingly, the Court should adopt the claim language's plain and ordinary meaning, which includes "any pressure enabling engine operation."

H. "prevent[s] the . . . fuel source from coupling . . . and . . . permit[s] the . . . fuel source to couple"

'780 Patent Claims 1 and 8;'985 Patent Claim 6;'654 Patent Claims 1 and 6;'970 Patent Claims 4, 26, and 50;'895 Patent Claims 1 and 14	
Champion's Proposal	**Firman's Proposal**
Plain and ordinary meaning	prevent[s] … the fuel source from attaching … and … allow[s] the … fuel source to attach

Champion believes this phrase does not require Court intervention. The phrase uses commonly used, simple words. A POSITA would accord this term its plain and ordinary meaning consistent with, and understood in light of, the specification and claim language, which includes to prevent fuel flow and permit fuel flow. [Ex. 3 ¶ 90.] A POSITA would not understand this term in the way Firman proposes, because Firman's proposed construction is confusing and overly restricts the meaning of "coupled." Firman changes the word "couple" to "attach." Given that "coupled" is a term the parties have agreed should

[10] For example: '985 Patent Claim 1 states, among other things: ". . . gaseous fuel . . . regulated down to a **desired pressure** . . . for delivery through the gaseous fuel line **to operate the generator**." The other referenced claims have comparable structure with language including "desired pressure . . . to operate the generator."

Snell & Wilmer L.L.P. LAW OFFICES One East Washington Street, Suite 2700 Phoenix, Arizona 85004-2556 602.382.6000

be accorded its plain and ordinary meaning,[11] creating specialized definitions for the coupling of the fuel source is confusing. [*Id.* ¶ 91.]

Dr. Singhose opines that the plain and ordinary meaning of "coupled" includes two or more components directly or indirectly interacting with each other, for example, physically, electrically, and/or fluidly. [*Id.* ¶¶ 54 n.1, 93.] Restricting "coupled" to mean only "attached" would eliminate the indirectly interacting aspect of the term "coupled." More specifically, Firman's proposed construction would completely eliminate fluid coupling, but the specifications clearly teach that fluid coupling could be included in the term "coupled." [*Id.*] For example, '780 Patent Col. 5 Ln. 52 – Col. 6 Ln. 31 gives examples showing that "coupled" as used here can relate to the concept of preventing fuel flow and permitting fuel flow, which Firman's construction contradicts and unnecessarily limits.

Firman's proposed construction not only walks back its agreement that "coupled" should be accorded its plain and ordinary meaning [n.11, above], but it also creates confusion instead of clarity. The Court should reject Firman's proposed construction.

VII. DISPUTED TERMS AND PROPOSED CONSTRUCTIONS — TERMS FOR WHICH FIRMAN HAS DISCLOSED EXPERT TESTIMONY

A. "selector switch"

'101 Patent Claims 17 and 18; '667 Patent Claims 1, 2, 7–8, 10–12, 14, and 18; '390 Patent Claims 1–4, and 6; '896 Patent Claims 21–23, 25, 27, 30–31, and 37	
Champion's Proposal	**Firman's Proposal**
Plain and ordinary meaning	a movable barrier whose positioning enables access for a subsequent user selection of only one fuel source[12]

Much like the "lockout apparatus," there is no need to construe the term "selector switch" because it has a well-understood plain and ordinary meaning, examples of which are supported in Col. 5 Ln. 37 – Col. 6 Ln. 31 and FIGS. 2–4B of the '780 Patent. [*See*

[11] Champion originally identified the term "couple" (and similar iterations such as couplable, coupled, coupling, etc.) as terms to be construed by the Court. After the Parties met and conferred on the disputed terms, the Parties agreed the Court need not construe the term, thus granting the term its plain and ordinary meaning. *See, e.g., Phillips* 415 F.3d at 1312 (claim terms are presumed to have their plain and ordinary meaning).

[12] Champion objects to Firman's proposal as untimely disclosed. [*See* ECF 130 at 1 n. 3.]

Snell & Wilmer L.L.P. LAW OFFICES One East Washington Street, Suite 2700 Phoenix, Arizona 85004-2556 602.382.6000

Snell & Wilmer
L.L.P.
LAW OFFICES
One East Washington Street, Suite 2700
Phoenix, Arizona 85004-2556
602.382.6000

Ex. 3 ¶¶ 131, 148–150.] Firman's proposed construction does not merely commit the cardinal sin of claim construction by attempting to rewrite the claim to import limitations from the specification, *the phrases in Firman's proposed construction do not even appear in the specification*. The specification does not refer to "barrier," "moveable," "positioning," "access," "subsequent user," or "action." [*See also id.* ¶¶ 150, 157 (explaining why "barrier" is confusing).] This entire construction exists only in Firman's litigation-driven mind, and it is totally untethered to the claim language.

As in *IQRIS*, 130 F.4th at 1004, "the patentee is free to choose a term and expect to obtain the full scope of its plain and ordinary meaning unless the patentee explicitly redefines the term or disavows its full scope." Here, as there, "[g]iven the claim language and absence of lexicography or disavowal," it would be improper to adopt Firman's proposed construction that improperly imports extraneous limitations into the claims. *Id.*

B. "fuel lockout apparatus"

'780 Claims 1–2, 6, 8–9, and 15; '985 Patent Claim 6	
Champion's Proposal	**Firman's Proposal**
Plain and ordinary meaning	a moveable barrier whose positioning prohibits a subsequent user action necessary to enable a different fuel source[13]

There is no need to construe the term "fuel lockout apparatus" because it has a well-understood plain and ordinary meaning, examples of which are supported in Col. 5 Ln. 37 – Col. 6 Ln. 31 and FIGS. 2–4B of the '780 Patent. [*See* Ex. 3 ¶¶ 144–145, 155–157.] Firman's proposed construction does not merely commit the cardinal sin of claim construction by attempting to rewrite the claim to import limitations from the specification, *the phrases in Firman's proposed construction do not even appear in the specification*. The specification does not refer to "barrier," "moveable," "positioning," "prohibits," "subsequent user," "action," or "necessary to enable." [*See also id.* ¶¶ 150, 157 (explaining why "barrier" is confusing).] This entire construction exists only in Firman's litigation-driven mind, and it is totally untethered to the claim language.

[13] Champion objects to Firman's proposal as untimely disclosed. [*See* ECF 130 at 21 n.22.]

As in *IQRIS*, 130 F.4th at 1004, "the patentee is free to choose a term and expect to obtain the full scope of its plain and ordinary meaning unless the patentee explicitly redefines the term or disavows its full scope." Here, as there, "[g]iven the claim language and absence of lexicography or disavowal," it would be improper to adopt Firman's proposed construction that improperly imports extraneous limitations into the claims. *Id*.

C. "electro-mechanical valve system"

'034 Claims 11 and 13–14; '120 Claims 13 and 15	
Champion's Proposal	**Firman's Proposal**
Plain and ordinary meaning	A system of one or more solenoid valves[14]

Here, Firman again commits the cardinal sin by importing the "solenoid" limitation into the claimed term "electro-mechanical," converting the term "electro-mechanical valve" into "solenoid valve." But that would render the claimed language "electro-mechanical" superfluous, violating a claim construction canon. *See SimpleAir, Inc. v. Sony Ericsson Mobile Commc'ns AB*, 820 F.3d 419, 429 (Fed. Cir. 2016) ("[I]nterpretations that render some portion of the claim language superfluous are disfavored.") (cleaned up); *Merck & Co. v. Teva Pharms. USA, Inc.*, 395 F.3d 1364, 1372 (Fed. Cir. 2005) ("A claim construction that gives meaning to all the terms of the claim is preferred over one that does not do so.").

The claim differentiation doctrine also requires that the Court reject Firman's construction because, for example, the '034 Patent Claims 11 and 13 include "an electro-mechanical valve system" that is not limited to solenoid valves, whereas Claim 14 (which depends on Claim 11) limits the "**electro-mechanical valve system**" as "compris[ing]: a carbuertor cutoff **solenoid** . . ., and a gaseous fuel cutoff **solenoid**." Therefore, claim differentiation shows that the electro-mechanical valve systems of the non-limited claims (11 and 13) are not required to have **solenoid** valves. Similarly, Claims 13 and 15 of the '120 Patent do not contain the "solenoid" limitation, even though Claims 1–8, 18, and 19 of the '120 Patent all contain the "solenoid" limitation. The patentee—and a POSITA reading these patents—clearly understood that "solenoid valve" does not share

[14] Champion objects to Firman's proposal as untimely disclosed. [*See* ECF 130 at 29 n.27.]

Snell & Wilmer
L.L.P.
LAW OFFICES
One East Washington Street, Suite 2700
Phoenix, Arizona 85004-2556
602.382.6000

Snell & Wilmer
L.L.P.
LAW OFFICES
One East Washington Street, Suite 2700
Phoenix, Arizona 85004-2556
602.382.6000

the definition of "electro-mechanical valve."

Specifically, while a solenoid is *an example* of an electro-mechanical valve, a person of ordinary skill in the art would understand that non-solenoid electro-mechanical valves exist that could be employed within the scope of these claims. As the plain and ordinary term implies, the valve system would have an "electrical" aspect and a "mechanical" aspect. [*See, e.g.,* '034 Patent Col. 2 Ln. 41–44 (in one embodiment, "[t]he electro-mechanical valve system couples to the engine and operates by an electrical switch powered by one of the alternator, a battery, and a magneto . . .").]

While not necessary, extrinsic evidence also supports plain and ordinary meaning. Champion's expert has explained that other examples of non-solenoid electro-mechanical valves that would have been understood by a POSITA include motorized ball valves, for example. [Ex. 3 ¶¶ 119, 164–169.] Firman's expert eventually acknowledged that there are types of electro-mechanical valves other than solenoids, after at first not recalling any. [Ex. 5 at 30:14–16, 31:7–10, 19–22, 32:9–15.] Bewilderingly, Firman's expert does not even know, generally, what a system of one or more valves means. [*Id*. at 103:1–12.]

Accordingly, the Court should adopt the plain and ordinary meaning rather than taking Firman's invitation to commit the cardinal sin of importing the "solenoid" limitation from the specification into the claims, also violating the doctrine of claim differentiation.

D. "coupled to [verb]"[15]

10,393,034 Claims 1 and 18; 11,840,970 Claim 44	
Champion's Proposal	**Firman's Proposal**
Plain and ordinary meaning; alternatively, arranged in a way to perform a desired action, e.g., to "open and close a gaseous fuel source to the engine"	indefinite

Firman's only position here is apparently that "coupled to [verb]" is indefinite under 35 U.S.C. § 112. Issued patents are presumed to be valid, which includes a presumption

[15] This formulation of "coupled to," followed by a verb, is the only phrase at issue in this dispute. There are numerous other instances in the asserted patent claims where "coupled to" is in a different grammatical form, *i.e.*, followed by a noun. Those instances of a different grammatical form of "coupled to" are not the subject of the dispute.

that they are not indefinite. Accordingly, "[i]ndefiniteness must be proven by clear and convincing evidence." *Sonix Tech. Co. v. Publ'ns. Itn'l, Ltd.*, 844 F.3d 1370, 1377 (Fed. Cir. 2017); *WSOU Invs. LLC v. Google LLC*, No. 2022-1064, 2023 WL 6531525, at *6 (Fed. Cir. Oct. 6, 2023) (party asserting indefiniteness "carries the ultimate burden to show indefiniteness due to lack of corresponding structure by clear and convincing evidence").

> The indefiniteness inquiry is concerned with whether the bounds of the invention are sufficiently demarcated, not with whether one of ordinary skill in the art may find a way to practice the invention. To assess whether a claim is indefinite, therefore, a court does not look to the knowledge of one skilled in the art apart from and unconnected to the disclosure of the patent. A court rather looks at the *disclosure* of the patent and determines if one of skill in the art would have understood that *disclosure* to encompass the required structure. As such, a patent need not explicitly include information that is already well known in the art. If a general approach is sufficiently well established in the art and referenced in the patent, the claim is not indefinite.

Giesecke & Devrient GmbH v. United States, 163 Fed. Cl. 430, 444 (2023) (cleaned up). The phrase "coupled to" in the '034 Patent Claims 1 and 18 and the '970 patent Claim 44 is not indefinite, and the Court should adopt its plain and ordinary meaning.

First, there is no requirement in patent law that a part cannot be coupled to, or connect to, perform a given action. For example, a patentee may claim "a fan arranged to cool a radiator." That fan need not be connected in any manner whatsoever to the radiator, but it must be arranged in a manner to cool it.

Firman's entire position wrongly supposes that the English language does not allow for—and a POSITA would not understand—using a verb after "coupled" because there is supposedly no way to know which structures are coupled. Firman's argument fails because this is an ordinary usage of the English language and because, regardless, the specification clearly shows examples of structures that can be coupled consistent with this claim language, such that a POSITA is reasonably informed about the scope of the claims. *See also, e.g., N. Star Innovations, Inc. v. Hirshfeld*, No. 2020-1874, 2021 WL 5121180, at *4 (Fed. Cir. Nov. 4, 2021) (affirming construction of "coupled for receiving" to mean "connected in order to receive," demonstrating that "coupled" need not specifically name

Snell & Wilmer
L.L.P.
LAW OFFICES
One East Washington Street, Suite 2700
Phoenix, Arizona 85004-2556
602.382.6000

Snell & Wilmer
L.L.P.
LAW OFFICES
One East Washington Street, Suite 2700
Phoenix, Arizona 85004-2556
602.382.6000

the structures being coupled).

The starting point is the claim language itself. *Phillips*, 415 F.3d at 1312.

- ’034 Claim 1: “a gaseous cutoff **coupled to** open and close a gaseous fuel source to the engine”;
- ’034 Claim 18: “a carburetor cutoff solenoid **coupled to** control fuel flow within the carburetor from the liquid fuel line and selectively engage engine operation on liquid fuel”; and
- ’970 Claim 44: “a dual fuel engine **coupled to** drive the alternator[.]”

Within the context of the claims, these phrases are understandable and speak for themselves. [Ex. 3 ¶¶ 56–57.] A POSITA would easily understand that “coupled to” in these instances plainly and ordinarily would mean the same thing as “arranged in a way to . . . [perform the action that follows].” [*Id.*] Hence:

- ’034 Claim 1: “a gaseous cutoff [**arranged in a way to**] open and close a gaseous fuel source to the engine”;
- ’034 Claim 18: “a carburetor cutoff solenoid [**arranged in a way to**] control fuel flow within the carburetor from the liquid fuel line and selectively engage engine operation on liquid fuel”;
- ’970 Claim 44: “a dual fuel engine [**arranged in a way**] to drive the alternator[.]”

Even though the claim language itself defeats Firman’s argument, the specifications also show that “coupled to” is not indefinite. Firman argues that there is no way to know what structures are being coupled by looking at the claims, but Firman ignores that “[t]he definiteness inquiry focuses on whether those skilled in the art would understand the scope of the claim when the claim is read i*n light of the rest of the specification*.” *BJ Servs. Co. v. Halliburton Energy Servs.,* 338 F.3d 1368, 1372 (Fed. Cir. 2003) (emphasis added). Firman’s position is plainly wrong, and the specifications provide clear examples.

For example, ’034 Patent Col. 12 Ln. 15 discloses: “Carburetor cutoff solenoid **94** couples to float bowl **88** to selectively control liquid fuel flow through main fuel circuit **152**.” FIG 4 of the ’034 Patent shows an example with reference numerals **88**, **94**, and **152**:

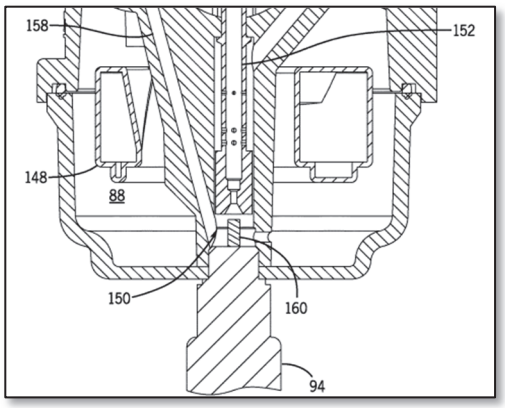

’034 Patent Col. 6 Ln. 5–8 also teaches: “Carburetor cutoff solenoid **94** operates to open and close a liquid fuel path to the engine downstream from float bowl **88** in carburetor **86**. The liquid fuel path in carburetor **86** provides fuel to the throat from float bowl **88** . . . . Carburetor cutoff solenoid **94** cuts off liquid fuel flow through the liquid fuel path to provide a liquid fuel cutoff solenoid that controls fuel flow from liquid fuel line **80** to the engine.”

In the ’034 Patent, Col. 6 Ln. 27–33 also refers to an “LPG cutoff solenoid **98**, or generally a gaseous fuel cutoff solenoid, coupling gaseous fuel source **82** to the intake and to control the flow of the gaseous fuel to the engine. LPG cutoff solenoid **98** provides a gaseous fuel value coupled along gaseous fuel line **84** to open and close gaseous fuel source **82** to the engine.” (Emphasis added.) [*See also* ’034 Patent Col. 12 at Ln. 8–9 (“carburetor **86** is attached to the engine at engine intake **162**[.]”.] These few (of many) examples refute Firman’s position that it is impossible to know what structures can be “coupled to . . .” within the scope of the claims at issue.

Moreover, Champion’s expert further supports that “coupled to” is not indefinite and that a POSITA would accord this term its plain and ordinary meaning, which includes being arranged in a way to perform a desired function. [Ex. 3 ¶ 56.] This construction is supported by various usages in the academic literature predating the relevant patents. [*Id.* ¶¶ 53–57; *see also* Ex. 6 at CPN012553 and Ex. 7 at CPN012597 (academic articles predating the Asserted Patents which use the term “coupled to [verb]”); Ex. 5 at 98:1–3, 14–25; 99:17–100:2; 100:23–101:11.]

A person of ordinary skill in the art, especially aided by the patents’ disclosures,

Snell & Wilmer
L.L.P.
LAW OFFICES
One East Washington Street, Suite 2700
Phoenix, Arizona 85004-2556
602.382.6000

would sufficiently understand the claimed structures, thus, "coupled to" is not indefinite. Therefore, the Court should find this term is not indefinite, and adopt its plain and ordinary meaning or, alternatively, that "coupled to" in the context of these three claimed phrases means "arranged in a way to perform" a desired action that is stated in the claim.

VIII. CONCLUSION

For the reasons above, the Court should adopt Champion's proposals for the disputed patent claim terms in this case.

DATED this 11th day of April, 2025.

SNELL & WILMER L.L.P.

By: */s/Zachary G. Schroeder*

David G. Barker
Zachary G. Schroeder
One East Washington Street
Suite 2700
Phoenix, Arizona 85004-2556

Timothy J. Ziolkowski
Jacob M. Fritz
ZIOLKOWSKI PATENT
SOLUTIONS GROUP, SC
136 S. Wisconsin Street
Port Washington, WI 53074

Attorneys for Plaintiff Champion Power Equipment, Inc.

Snell & Wilmer
L.L.P.
LAW OFFICES
One East Washington Street, Suite 2700
Phoenix, Arizona 85004-2556
602.382.6000