US008517718B2

(12) **United States Patent**
Deng

(10) **Patent No.: US 8,517,718 B2**
(45) **Date of Patent: Aug. 27, 2013**

(54) **DUAL FUEL HEATING SOURCE**

(76) Inventor: **David Deng**, Diamond Bar, CA (US)

(*) Notice: Subject to any disclaimer, the term of this patent is extended or adjusted under 35 U.S.C. 154(b) by 640 days.

(21) Appl. No.: **12/797,511**

(22) Filed: **Jun. 9, 2010**

(65) **Prior Publication Data**

US 2010/0330513 A1 Dec. 30, 2010

Related U.S. Application Data

(60) Provisional application No. 61/221,521, filed on Jun. 29, 2009, provisional application No. 61/221,520, filed on Jun. 29, 2009, provisional application No. 61/221,529, filed on Jun. 29, 2009, provisional application No. 61/221,528, filed on Jun. 29, 2009, provisional application No. 61/287,147, filed on Dec. 16, 2009, provisional application No. 61/286,355, filed on Dec. 14, 2009, provisional application No. 61/286,354, filed on Dec. 14, 2009, provisional application No. 61/286,352, filed on Dec. 14, 2009, provisional application No. 61/304,373, filed on Feb. 12, 2010.

(51) **Int. Cl.**

F23C 1/08	(2006.01)
F23C 1/00	(2006.01)
F23D 17/00	(2006.01)
F24C 1/02	(2006.01)

(52) **U.S. Cl.**

USPC **431/12**; 431/2; 431/278; 431/280; 431/284; 431/285; 126/265; 137/597; 137/595; 137/613

(58) **Field of Classification Search**

CPC F23C 1/08; F23C 1/00; F23N 1/00

USPC 431/12, 2, 278, 280, 284, 285; 126/265; 137/597, 595, 613

IPC F23C 1/08, 1/00; F23D 17/00; F24C 1/02

See application file for complete search history.

(56) **References Cited**

U.S. PATENT DOCUMENTS

743,714	A	11/1903	Guese
1,051,072	A	1/1913	Bradley

(Continued)

FOREIGN PATENT DOCUMENTS

CA	2391757	1/2003
CN	1873268	12/2006

(Continued)

OTHER PUBLICATIONS

International Preliminary Report on Patentability for International Application No. PCT/US2010/039668, Notification mailed Oct. 14, 2011.

(Continued)

Primary Examiner — Steven B Mcallister
Assistant Examiner — Daniel E Namay
(74) *Attorney, Agent, or Firm* — Knobbe Martens Olson & Bear LLP

(57) **ABSTRACT**

A dual fuel heating source can have a fuel selector valve for selecting between a first fuel and a second fuel different from the first. The dual fuel heating source may selectively have a regulator unit, and an outlet valve. The regulator unit can be configured to regulate the pressure of two different fuels. The outlet valve can be connected to the fuel selector valve such that selecting a fuel can determine the path fuel will flow through the outlet valve and also out of the heating source.

12 Claims, 44 Drawing Sheets

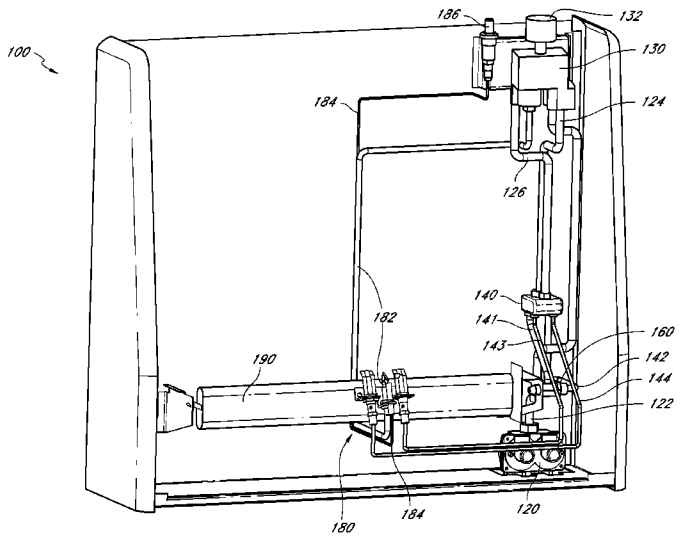

(56) **References Cited**

U.S. PATENT DOCUMENTS

1,216,529	A	2/1917	Wilcox
1,589,386	A	6/1926	Harper
1,639,780	A	8/1927	Mulholland
1,860,942	A	5/1932	Morse
1,867,110	A	7/1932	Signore
1,961,086	A	5/1934	Sherman et al.
2,054,588	A	9/1936	Stephens
2,095,064	A	10/1937	Harper
2,108,299	A	2/1938	Steffen
2,120,864	A	6/1938	Kagi
2,160,264	A	5/1939	Furlong
2,161,523	A	6/1939	Moecker, Jr. et al.
2,319,676	A	5/1943	Guelson
2,380,956	A	8/1945	Evarts
2,422,368	A	6/1947	Ray
2,443,892	A	6/1948	Caparone
2,556,337	A	6/1951	Paille
2,630,821	A	3/1953	Arey et al.
2,652,225	A	9/1953	Peterson
2,661,157	A	12/1953	Reichelderfer
2,687,140	A	8/1954	St. Clair et al.
2,747,613	A	5/1956	Reinhart
2,905,361	A	9/1959	Noall
3,001,541	A	9/1961	St. Clair et al.
3,032,096	A	5/1962	Stoul
3,139,879	A	7/1964	Bauer et al.
3,331,392	A	7/1967	Davidson et al.
3,417,779	A	12/1968	Golay
3,430,655	A	3/1969	Forney
3,590,806	A	7/1971	Locke
3,800,830	A	4/1974	Etter
3,814,570	A	6/1974	Guigues et al.
3,814,573	A	6/1974	Karlovetz
3,829,279	A	8/1974	Qualley et al.
3,843,310	A	10/1974	Massi
3,884,413	A	5/1975	Berquist
3,939,871	A	2/1976	Dickson
D243,694	S	3/1977	Faulkner
4,021,190	A	5/1977	Dickson
4,081,235	A	3/1978	Van der Veer
4,101,257	A	7/1978	Straitz, III
4,157,238	A	6/1979	Van Berkum
4,249,886	A	2/1981	Bush
4,290,450	A	9/1981	Swanson
4,301,825	A	11/1981	Simko
4,329,137	A	5/1982	Werne
4,340,362	A	7/1982	Chalupsky et al.
4,348,172	A	9/1982	Miller
4,355,659	A	10/1982	Kelchner
4,359,284	A	11/1982	Kude et al.
4,465,456	A	8/1984	Hynek et al.
4,474,166	A	10/1984	Shaftner et al.
4,509,912	A	4/1985	VanBerkum
4,640,680	A	2/1987	Schilling
4,718,846	A	1/1988	Oguri et al.
4,768,543	A	9/1988	Wienke et al.
4,768,947	A	9/1988	Adachi
4,782,814	A	11/1988	Cherryholmes
4,796,652	A	1/1989	Hafla
4,848,133	A	7/1989	Paulis et al.
4,848,313	A	7/1989	Velie
4,874,006	A	10/1989	Iqbal
4,930,538	A	6/1990	Browne
4,965,707	A	10/1990	Butterfield
5,025,990	A	6/1991	Ridenour
5,027,854	A	7/1991	Genbauffe
5,090,899	A	2/1992	Kee
5,172,728	A	12/1992	Tsukazaki
5,239,979	A	8/1993	Maurice et al.
5,251,823	A	10/1993	Joshi et al.
5,278,936	A	1/1994	Shao
5,379,794	A	1/1995	Brown
5,397,233	A	3/1995	Eavenson et al.
5,413,141	A	5/1995	Dietiker
5,437,304	A	8/1995	Delcroix
5,452,709	A	9/1995	Mealer
5,470,018	A	11/1995	Smith
5,513,798	A	5/1996	Tavor
5,542,609	A	8/1996	Myers et al.
5,567,141	A	10/1996	Joshi et al.
5,584,680	A	12/1996	Kim
5,591,024	A	1/1997	Eavenson et al.
5,603,211	A	2/1997	Graves
5,642,580	A	7/1997	Hess et al.
5,645,043	A	7/1997	Long et al.
D391,345	S	2/1998	Mandir et al.
5,782,626	A	7/1998	Joos et al.
5,787,874	A	8/1998	Krohn et al.
5,787,928	A	8/1998	Allen et al.
5,807,098	A	9/1998	Deng
5,814,121	A	9/1998	Travis
5,838,243	A	11/1998	Gallo
5,906,197	A	5/1999	French et al.
5,915,952	A	6/1999	Manning et al.
5,931,661	A	8/1999	Kingery
5,941,699	A	8/1999	Abele
5,966,937	A	10/1999	Graves
5,971,746	A	10/1999	Givens et al.
5,975,112	A	11/1999	Ohmi et al.
5,987,889	A	11/1999	Graves et al.
5,988,204	A	11/1999	Reinhardt et al.
6,035,893	A	3/2000	Ohmi et al.
6,045,058	A	4/2000	Dobbeling et al.
6,068,017	A	5/2000	Haworth et al.
6,076,517	A	6/2000	Kahlke et al.
6,135,063	A	10/2000	Welden
6,162,048	A	12/2000	Griffioen et al.
6,227,451	B1	5/2001	Caruso
6,244,223	B1	6/2001	Welk
6,244,524	B1	6/2001	Tackels et al.
6,257,270	B1	7/2001	Ohmi et al.
6,340,298	B1	1/2002	Vandrak et al.
6,354,072	B1 *	3/2002	Hura 60/776
6,354,078	B1	3/2002	Karlsson et al.
6,367,239	B1 *	4/2002	Brown et al. 60/775
6,543,235	B1	4/2003	Black et al.
6,607,854	B1	8/2003	Rehg et al.
6,648,635	B2	11/2003	Vandrak et al.
6,786,194	B2	9/2004	Koegler et al.
6,845,966	B1	1/2005	Albizuri
6,884,065	B2	4/2005	Vandrak et al.
6,901,962	B2	6/2005	Kroupa et al.
6,904,873	B1	6/2005	Ashton
6,910,496	B2	6/2005	Strom
6,938,634	B2	9/2005	Dewey
7,013,886	B2	3/2006	Deng
7,044,729	B2	5/2006	Ayastuy
7,048,538	B2	5/2006	Albizuri
7,156,370	B2	1/2007	Albizuri
7,174,913	B2	2/2007	Albizuri
7,201,186	B2	4/2007	Ayastuy
7,251,940	B2	8/2007	Graves et al.
7,299,799	B2	11/2007	Albizuri
7,367,352	B2	5/2008	Hagen et al.
7,434,447	B2	10/2008	Deng
7,458,386	B2	12/2008	Zhang
7,487,888	B1	2/2009	Pierre, Jr.
7,490,869	B2	2/2009	Iturralde et al.
7,528,608	B2	5/2009	Elexpuru et al.
7,533,656	B2	5/2009	Dingle
7,591,257	B2	9/2009	Bayer et al.
7,600,529	B2	10/2009	Querejeta
7,607,325	B2	10/2009	Elexpuru et al.
7,607,426	B2	10/2009	Deng
7,634,993	B2	12/2009	Bellomo
7,637,476	B2	12/2009	Mugica et al.
7,641,470	B2	1/2010	Albizuri
7,651,330	B2	1/2010	Albizuri
7,654,820	B2	2/2010	Deng
7,677,236	B2	3/2010	Deng
7,730,765	B2	6/2010	Deng
7,758,323	B2	7/2010	Orue
7,766,006	B1	8/2010	Manning
7,861,706	B2	1/2011	Bellomo

7,901,204	B2 *	3/2011	Stephens et al.	431/174
7,909,601	B2 *	3/2011	Stephens et al.	431/278
7,942,164	B2	5/2011	Hsiao	
7,967,005	B2	6/2011	Parrish	
7,967,006	B2	6/2011	Deng	
7,967,007	B2	6/2011	Deng	
8,011,920	B2	9/2011	Deng	
8,075,305	B2 *	12/2011	Stephens et al.	431/174
8,152,515	B2	4/2012	Deng	
8,235,708	B2	8/2012	Deng	
8,241,034	B2 *	8/2012	Deng	431/278
8,317,511	B2 *	11/2012	Deng	431/74
2002/0058266	A1	5/2002	Clough et al.	
2002/0160325	A1	10/2002	Deng	
2002/0160326	A1	10/2002	Deng	
2003/0010952	A1	1/2003	Morete	
2003/0217555	A1	11/2003	Gerhold	
2004/0226600	A1	11/2004	Starer et al.	
2004/0238030	A1	12/2004	Dewey, Jr.	
2005/0167530	A1	8/2005	Ward et al.	
2005/0202361	A1	9/2005	Albizuri	
2005/0208443	A1	9/2005	Bachinski et al.	
2006/0096644	A1	5/2006	Goldfarb et al.	
2006/0201496	A1	9/2006	Shingler	
2007/0044856	A1	3/2007	Bonior	
2007/0154856	A1	7/2007	Hallit et al.	
2007/0210069	A1	9/2007	Albizuri	
2007/0215223	A1	9/2007	Morris	
2007/0277803	A1	12/2007	Deng	
2007/0277812	A1 *	12/2007	Deng	126/92 AC
2007/0277813	A1 *	12/2007	Deng	126/92 R
2008/0121116	A1	5/2008	Albizuri	
2008/0149871	A1	6/2008	Deng	
2008/0149872	A1	6/2008	Deng	
2008/0153044	A1	6/2008	Deng	
2008/0153045	A1	6/2008	Deng	
2008/0168980	A1	7/2008	Lyons et al.	
2008/0223465	A1	9/2008	Deng	
2008/0227041	A1	9/2008	Kirchner et al.	
2008/0227045	A1	9/2008	Deng	
2008/0236688	A1	10/2008	Albizuri	
2008/0236689	A1	10/2008	Albizuri	
2008/0314090	A1	12/2008	Orue Orue et al.	
2009/0039072	A1	2/2009	Llona	
2009/0139304	A1	6/2009	Deng	
2009/0140193	A1	6/2009	Albizuri Landa	
2009/0159068	A1	6/2009	Querejeta et al.	
2009/0235998	A1	9/2009	Hsiao	
2009/0280448	A1	11/2009	Antxia Uribetxebarria et al.	
2010/0035195	A1	2/2010	Querejeta Andueza et al.	
2010/0035196	A1	2/2010	Deng	
2010/0037884	A1	2/2010	Deng	
2010/0086884	A1	4/2010	Querejeta Andueza et al.	
2010/0086885	A1	4/2010	Querejeta Andueza et al.	
2010/0089385	A1	4/2010	Albizuri	
2010/0089386	A1	4/2010	Albizuri	
2010/0095945	A1	4/2010	Manning	
2010/0154777	A1	6/2010	Carvalho et al.	
2010/0170503	A1	7/2010	Deng	
2010/0255433	A1	10/2010	Querejeta Andueza et al.	
2010/0275953	A1	11/2010	Orue Orue et al.	
2010/0304317	A1	12/2010	Deng	
2010/0310997	A1	12/2010	M gica Odriozola et al.	
2010/0326422	A1	12/2010	Deng	
2010/0326430	A1	12/2010	Deng	
2010/0330518	A1	12/2010	Deng	
2010/0330519	A1	12/2010	Deng	
2011/0081620	A1	4/2011	Deng	
2012/0080024	A1	4/2012	Deng	
2012/0132189	A1	5/2012	Deng	

FOREIGN PATENT DOCUMENTS

DE	720 854	C		5/1942
EP	1970625	A2	*	9/2008
JP	58 219320	A		12/1983
JP	59009425			1/1984
JP	62169926			7/1987
JP	03 230015	A		10/1991
JP	10141656			5/1998
JP	11192166			7/1999
JP	11193929			7/1999
JP	11-344216			12/1999
JP	2000234738			8/2000
JP	2003 056845	A		2/2003
JP	2003-65533			3/2003
JP	2003 074837	A		3/2003
JP	2003 074838	A		3/2003
JP	2003-83537			3/2003
JP	2003-90517			3/2003
JP	2006029763	A	*	2/2006
JP	2007017030	A	*	1/2007
JP	2010071477			4/2010
WO	WO 2008/071970			6/2008

OTHER PUBLICATIONS

International Preliminary Report on Patentability for International Application No. PCT/US2010/039681, Notification mailed Oct. 14, 2011.

International Preliminary Report on Patentability for International Application No. PCT/US2010/039687, Notification mailed Sep. 20, 2011.

Consumer Guide to Vent-Free Gas Supplemental Heating Products, est. 2007.

Heat and Glo, Escape Series Gas Fireplaces, Mar. 2005.

Heat and Glo, Escape-42DV Owner's Manual, Rev. i, Dec. 2006.

International Search Report and Written Opinion for Application No. PCT-US2008-056910, mailed Jul. 16, 2008.

International Search Report and Written Opinion for International Application No. PCT/US2010/039668, Notification mailed Oct. 1, 2010.

International Search Report and Written Opinion for International Application No. PCT/US2010/039687, Notification mailed Oct. 5, 2010.

International Search Report and Written Opinion for International Application No. PCT/US2010/039655, Notification mailed Jan. 14, 2011.

International Search Report and Written Opinion for International Application No. PCT/US2010/039681, Notification mailed Jan. 12, 2011.

Napoleon, Park Avenue Installation and Operation Instructions, Jul. 20, 2006.

Napoleon, The Madison Installation and Operation Instructions, May 24, 2005.

International Preliminary Report on Patentability for International Application No. PCT/US2010/039655, Notification mailed Oct. 14, 2011.

* cited by examiner

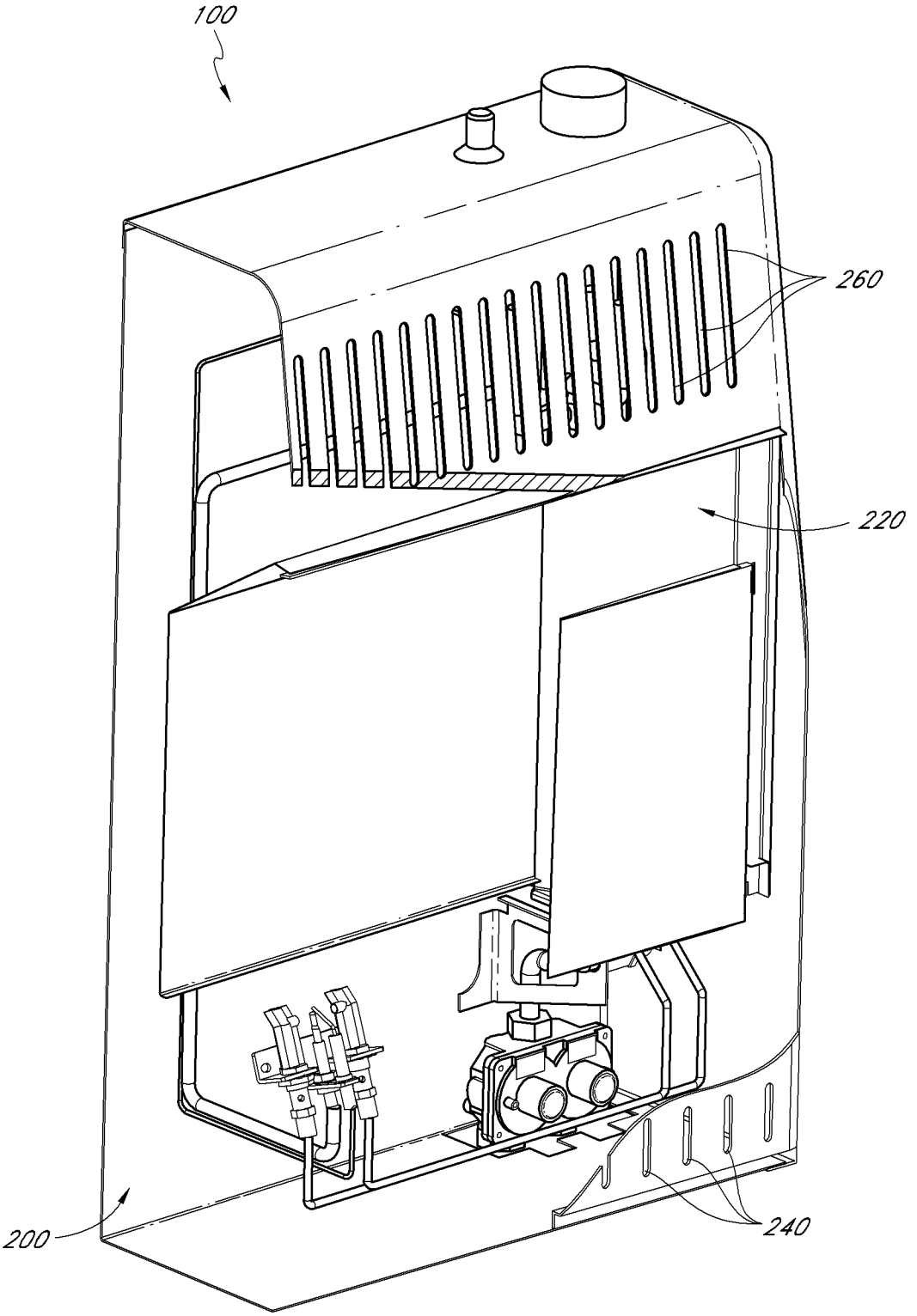

FIG. 1

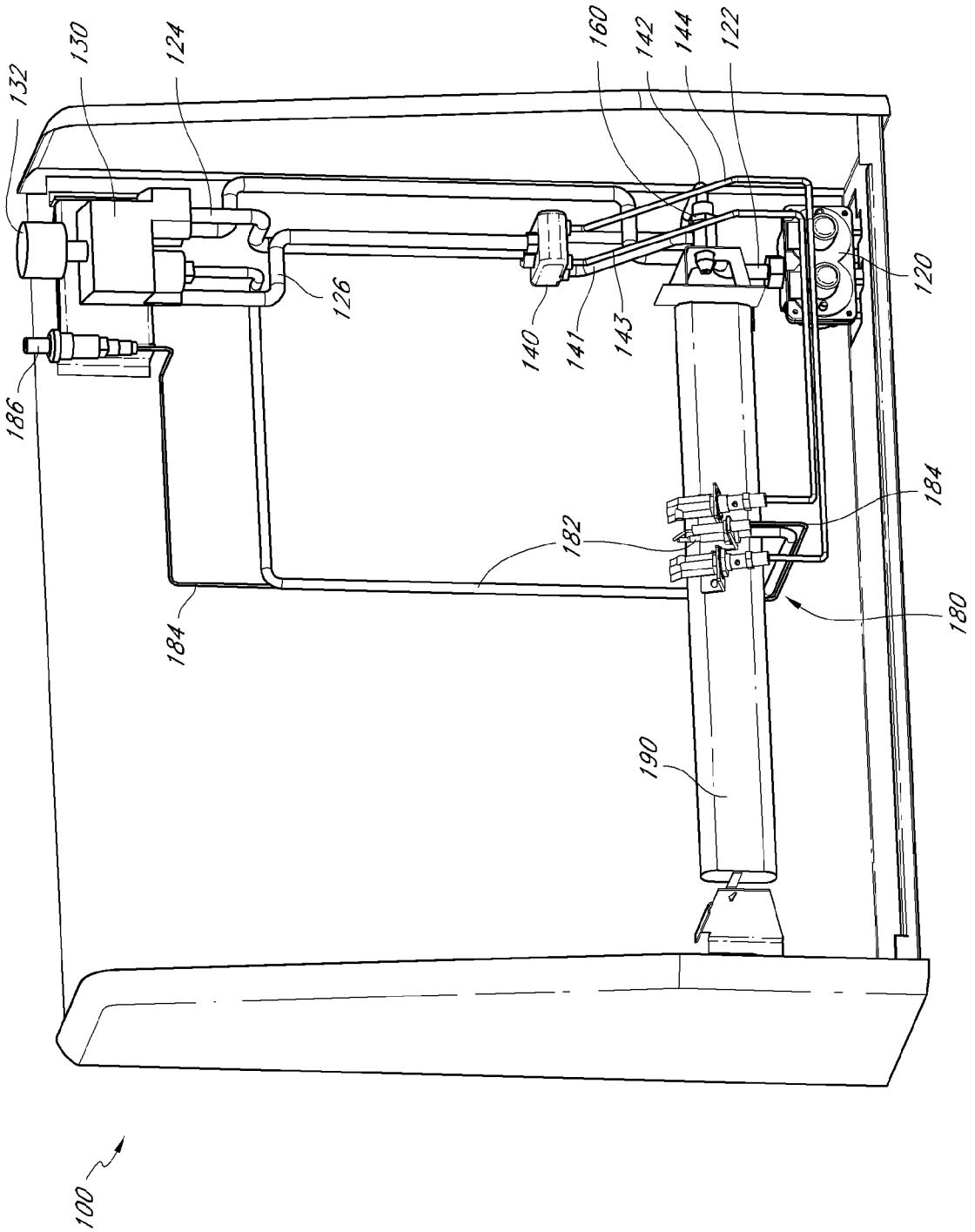
132
130
124
160
142
144
122
120
126
140
141
143
186
184
182
180
190
100

FIG. 2

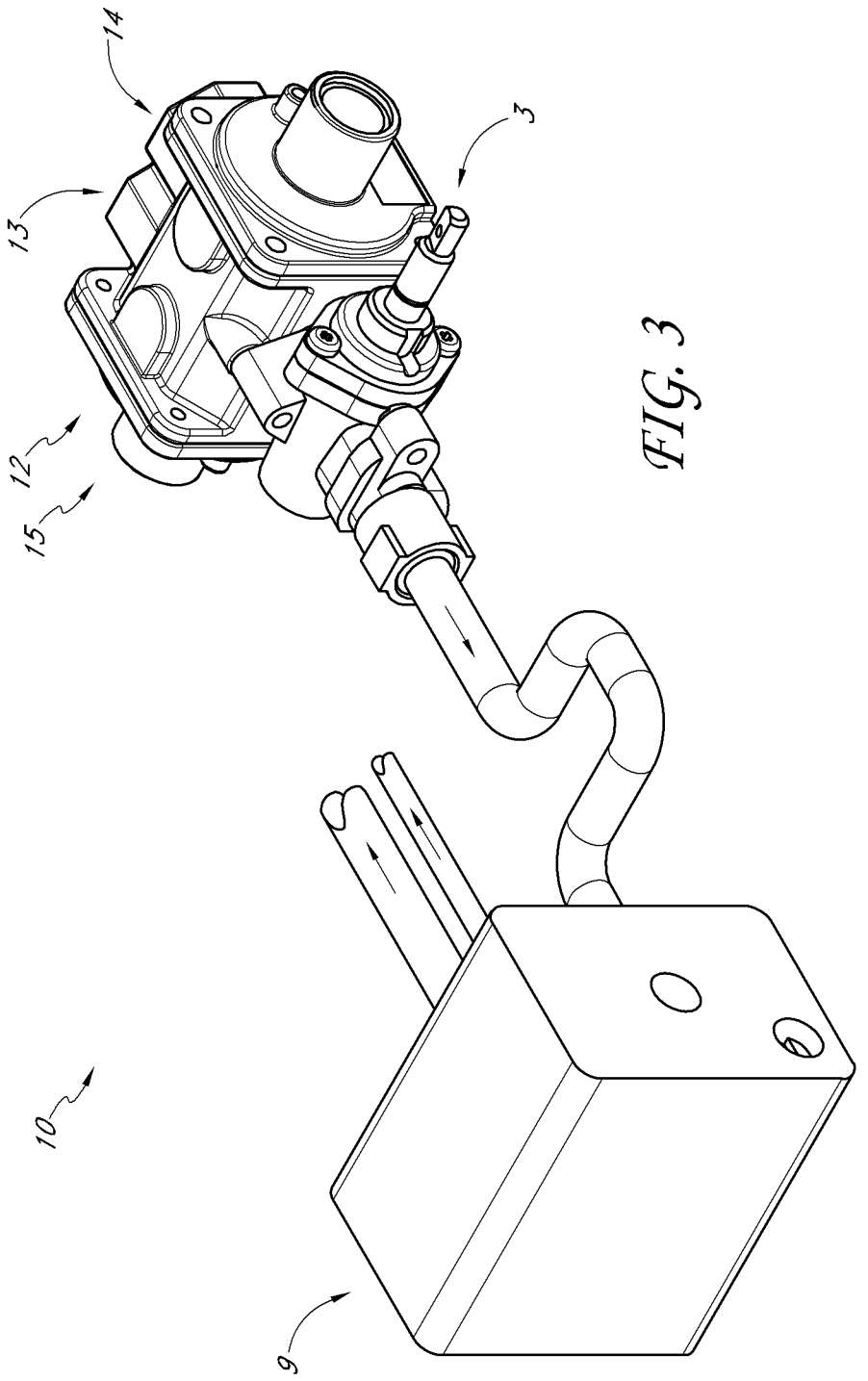

FIG. 3

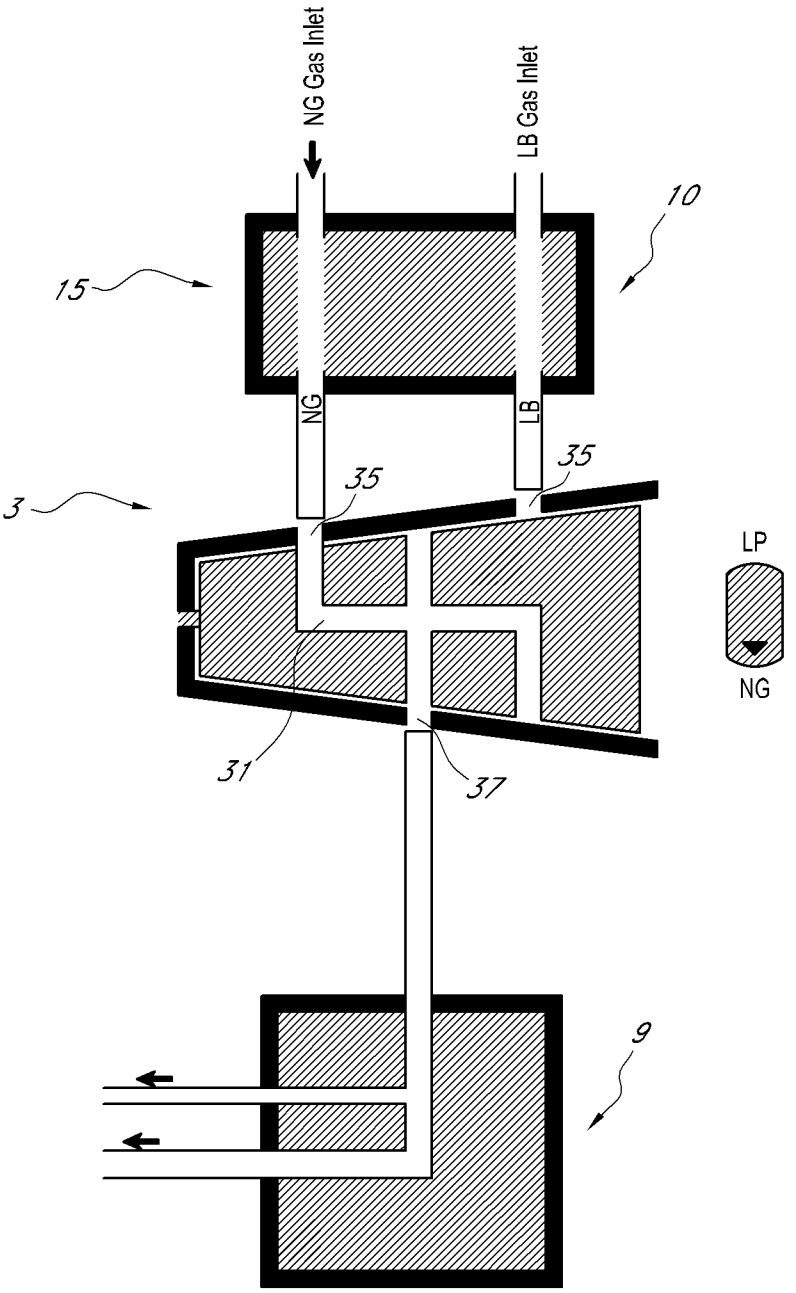

FIG. 4

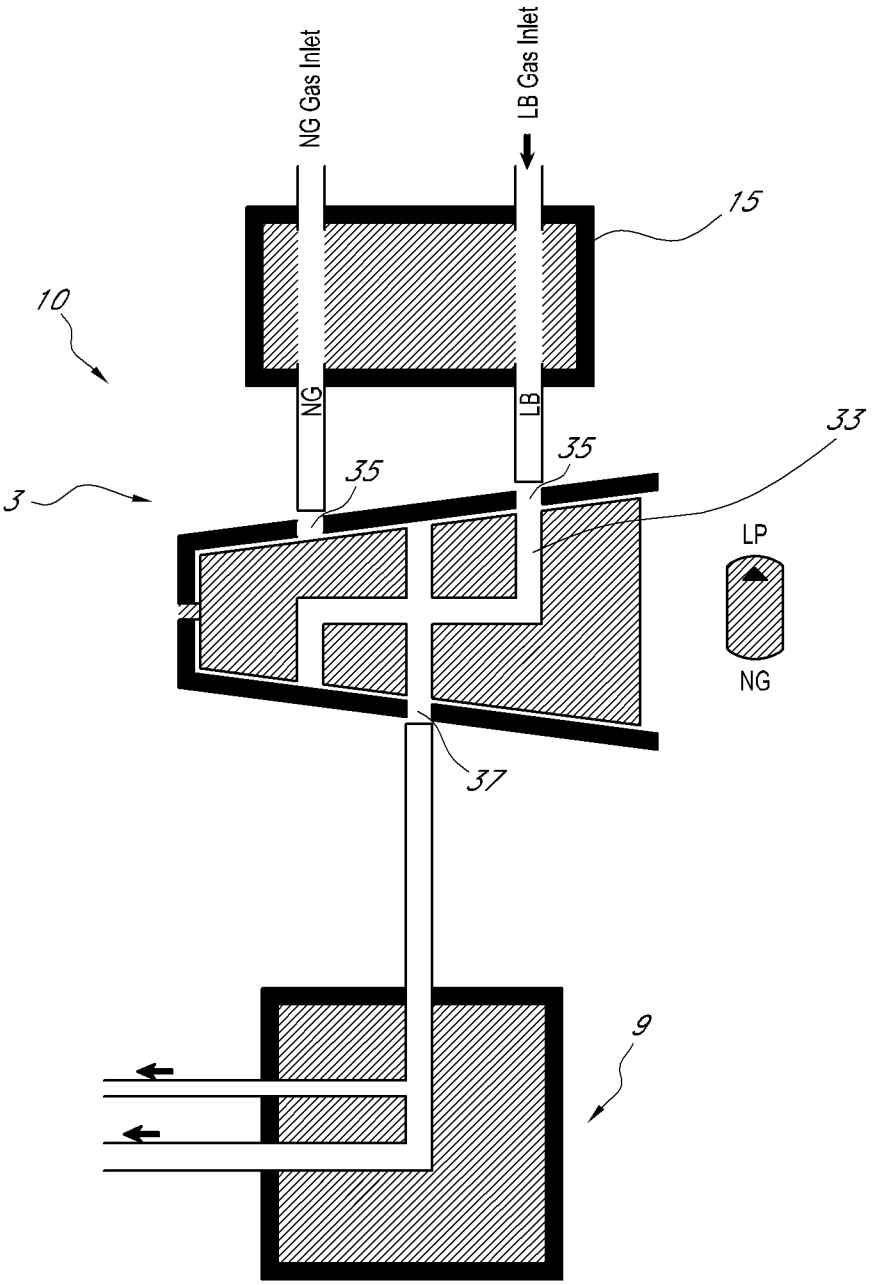

FIG. 5

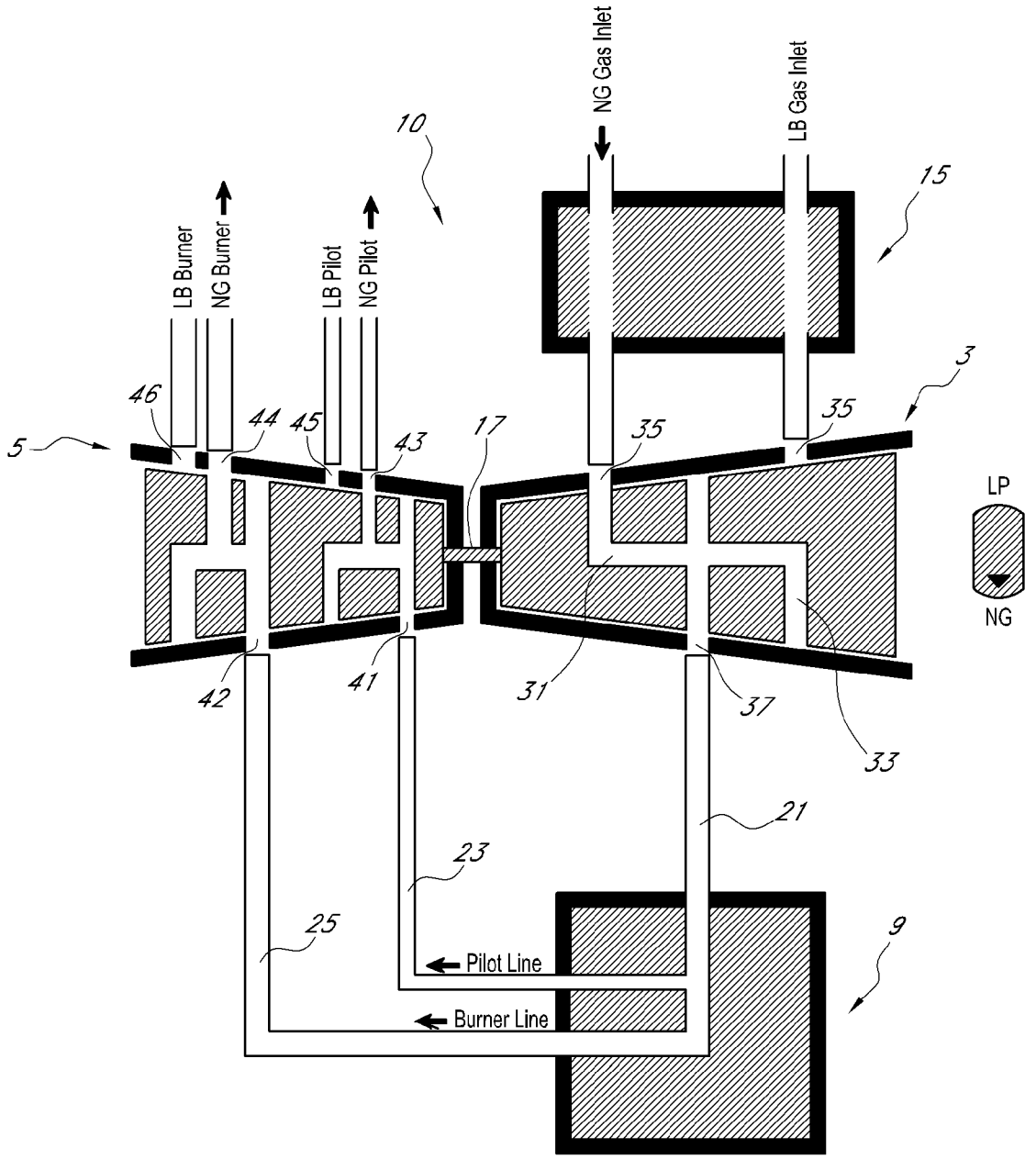
NG Gas Inlet
LB Gas Inlet
10
15
LB Burner
NG Burner
LB Pilot
NG Pilot
3
46
44
45
43
17
35
35
5
LP
NG
42
41
31
37
33
21
23
25
9
Pilot Line
Burner Line

FIG. 6

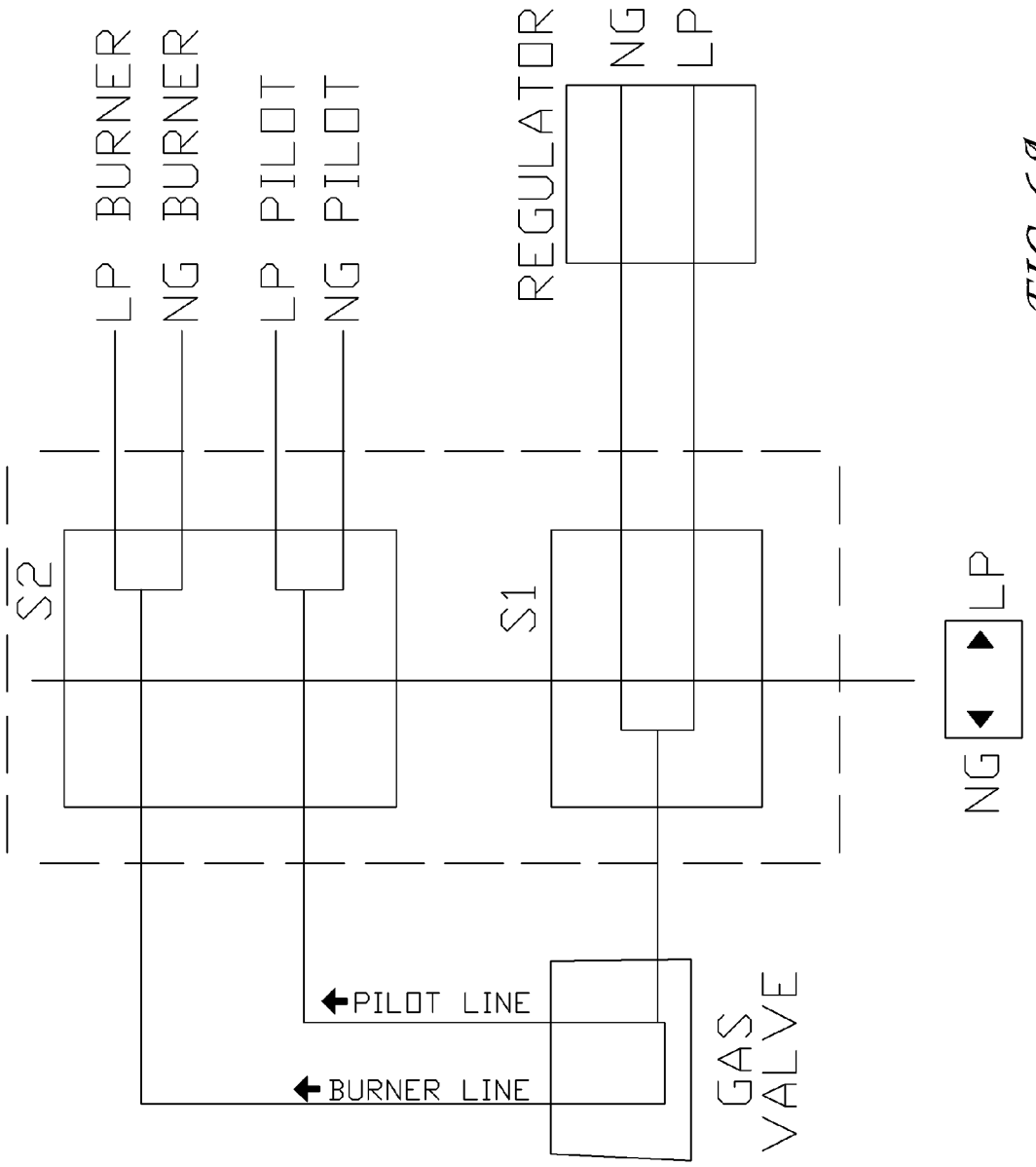
LP BURNER
NG BURNER
LP PILOT
NG PILOT
REGULATOR
NG
LP
S2
S1
NG
LP
PILOT LINE
BURNER LINE
GAS VALVE

FIG. 6A

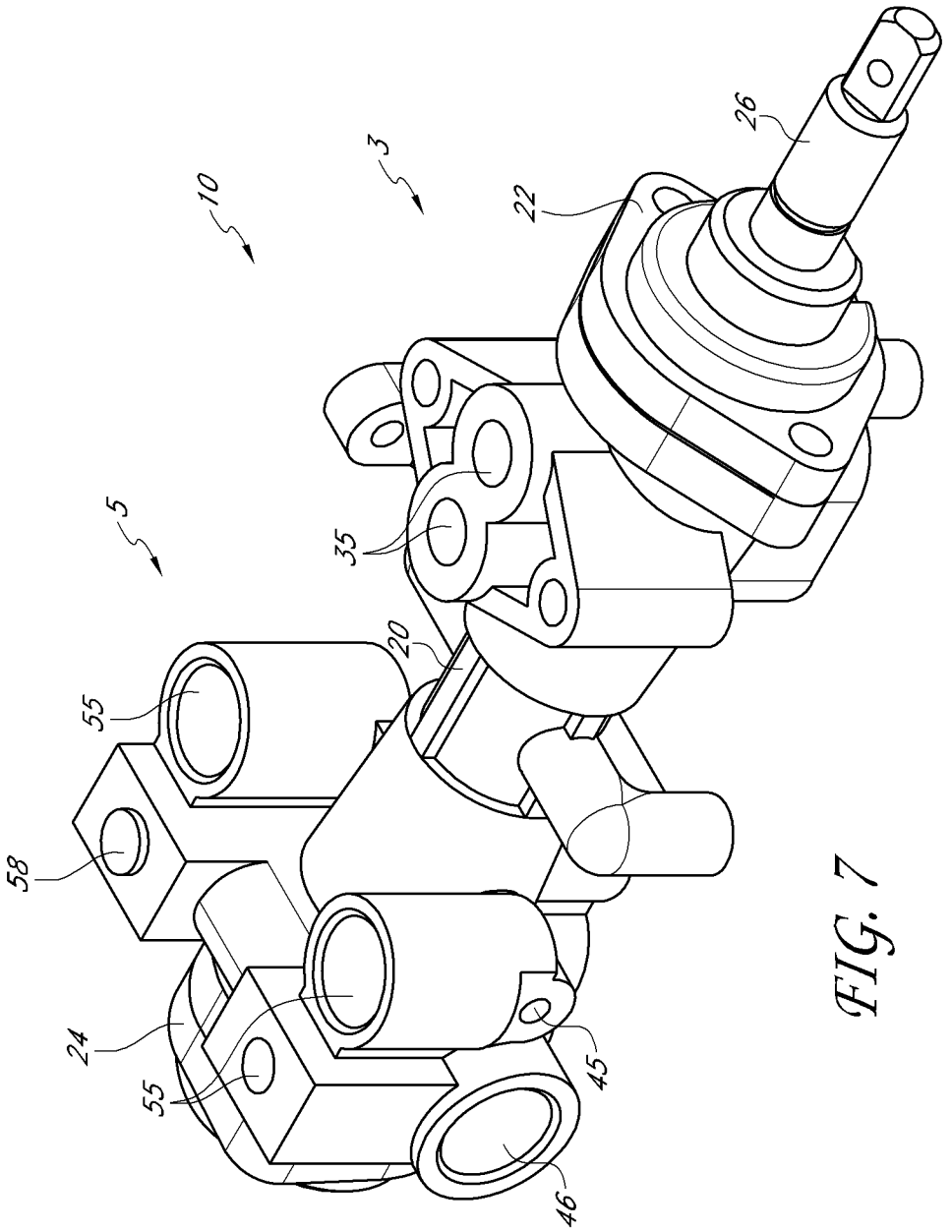

FIG. 7

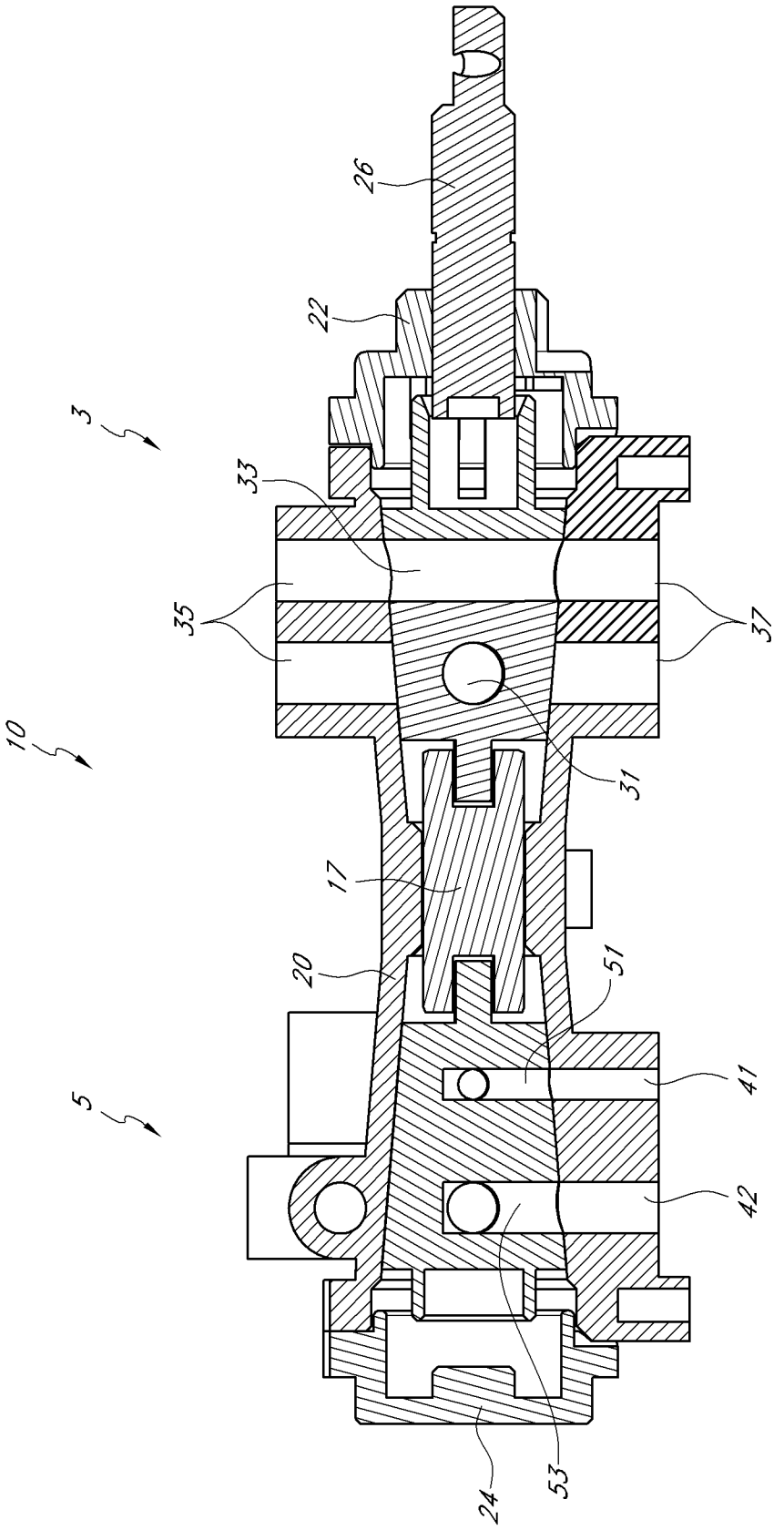

FIG. 8

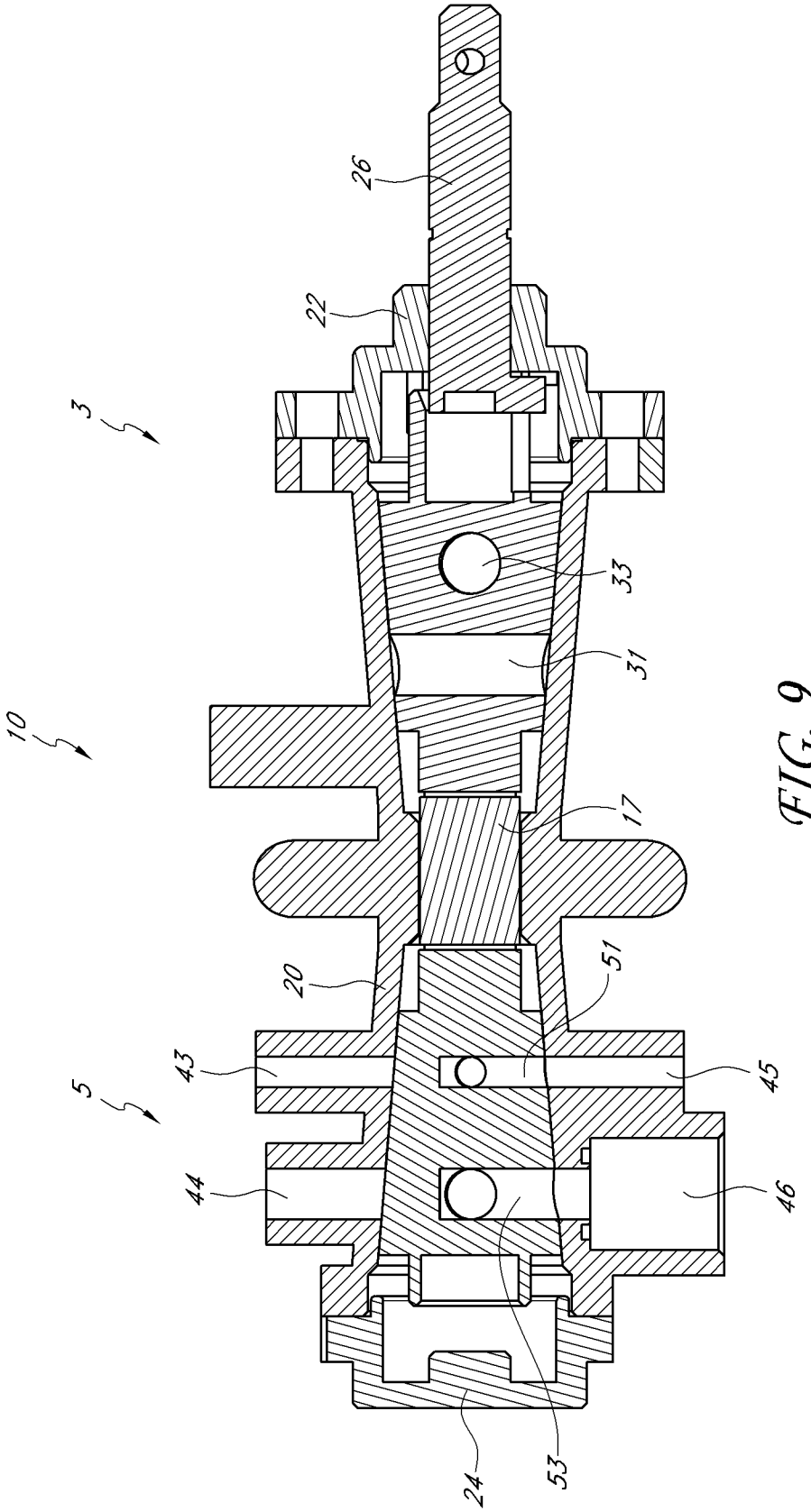

FIG. 9

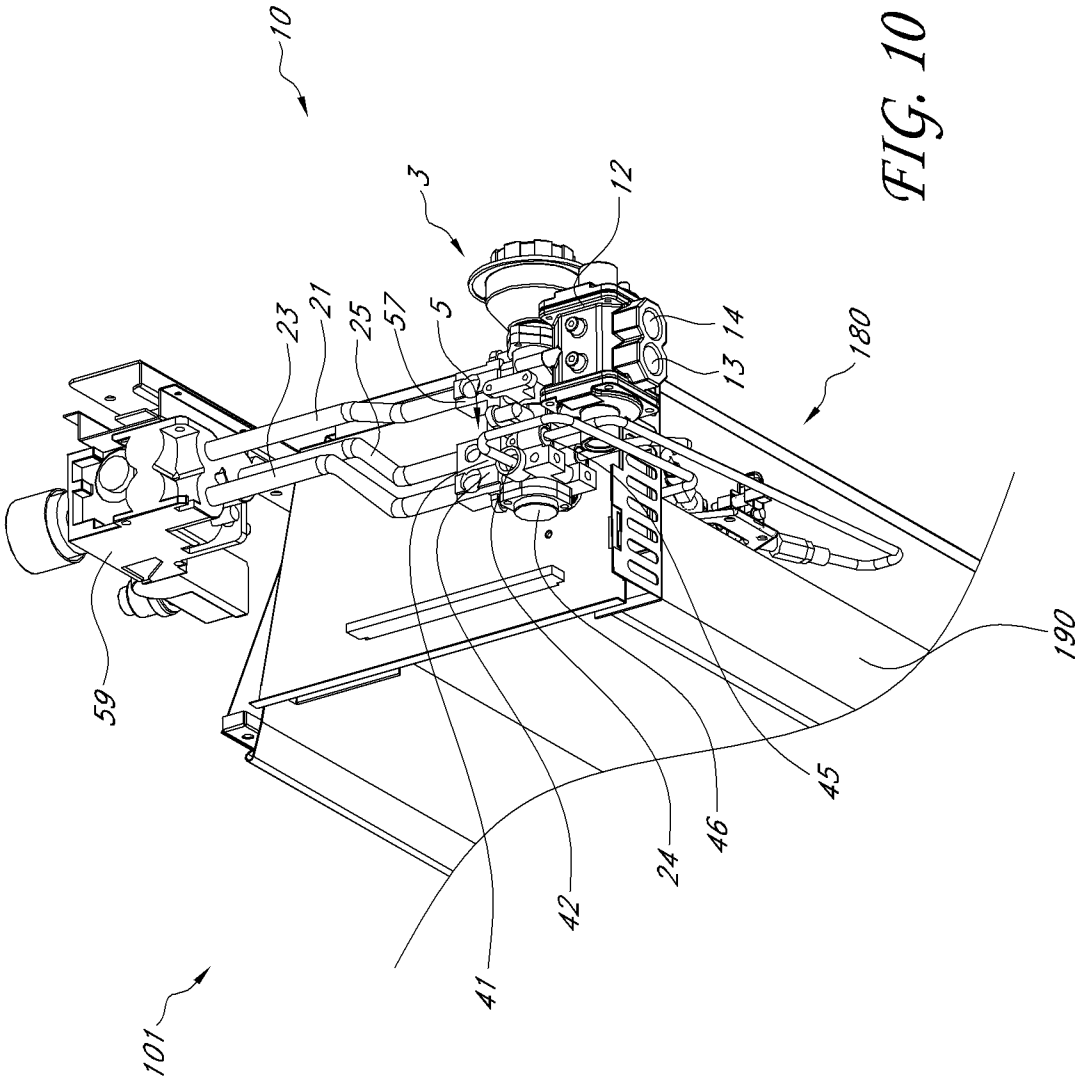

FIG. 10

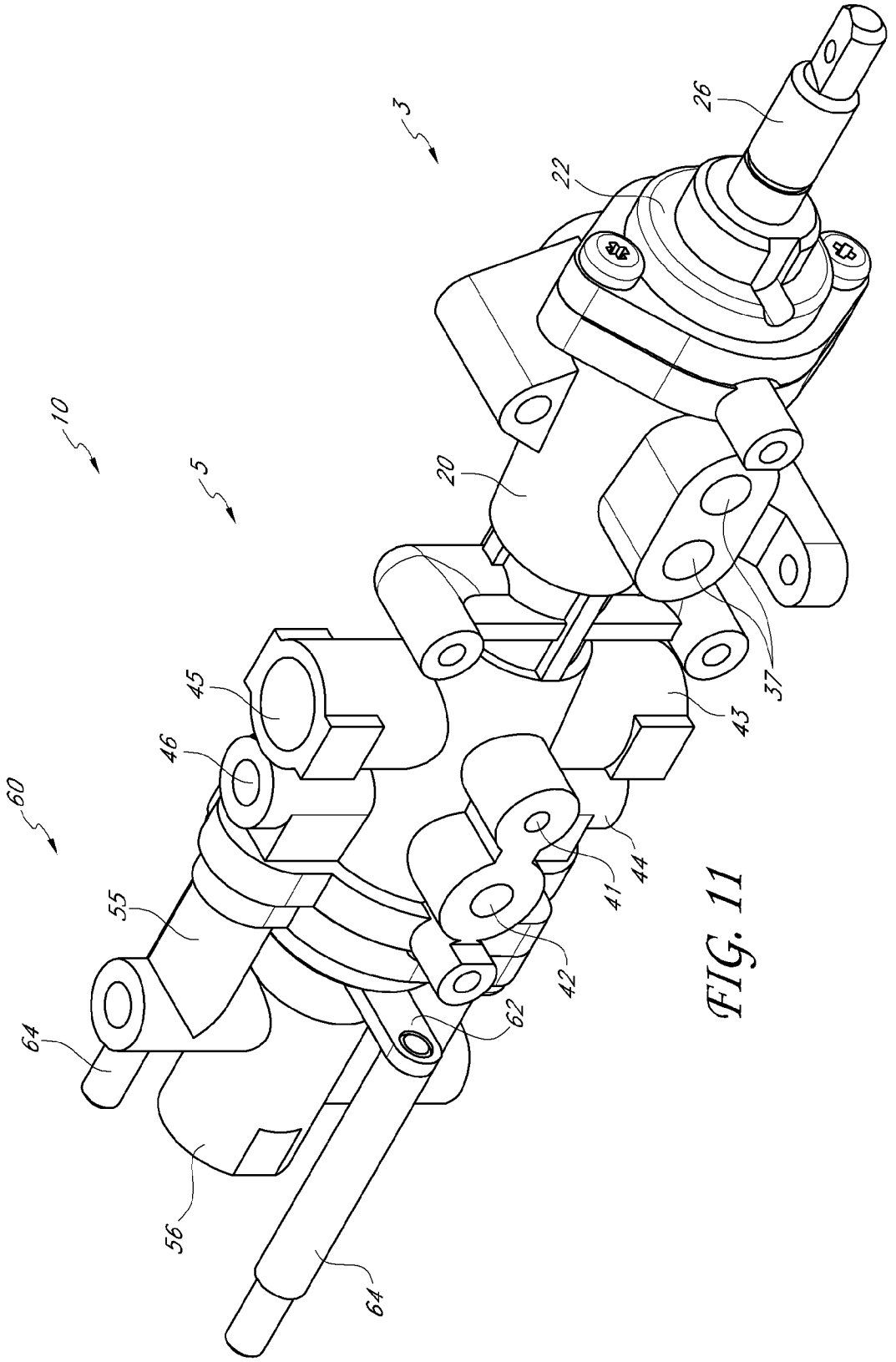

FIG. 11

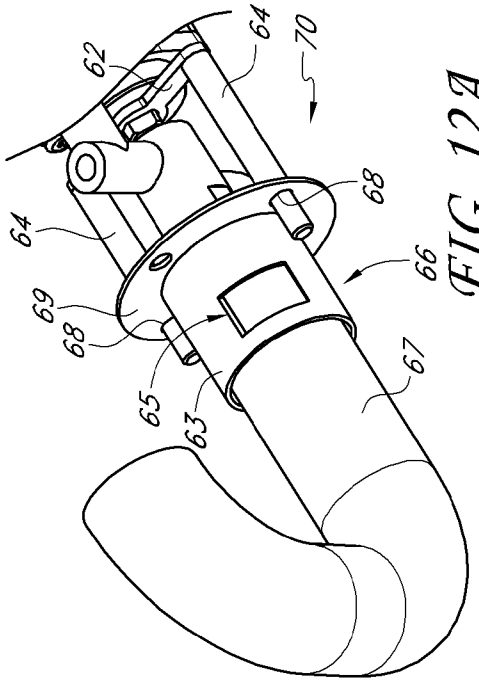

FIG. 12A

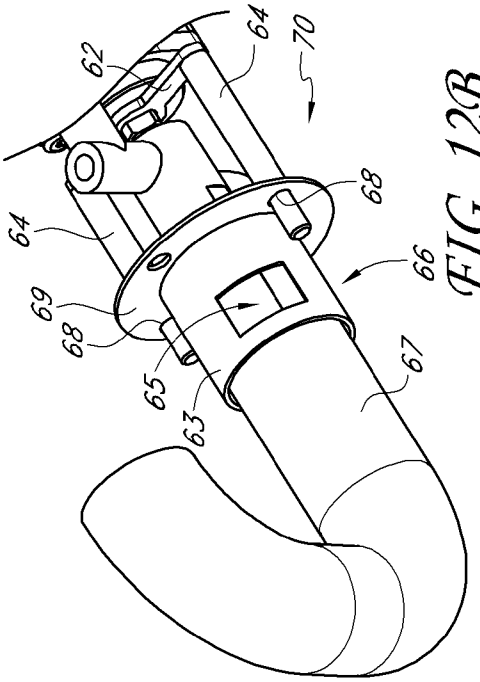

FIG. 12B

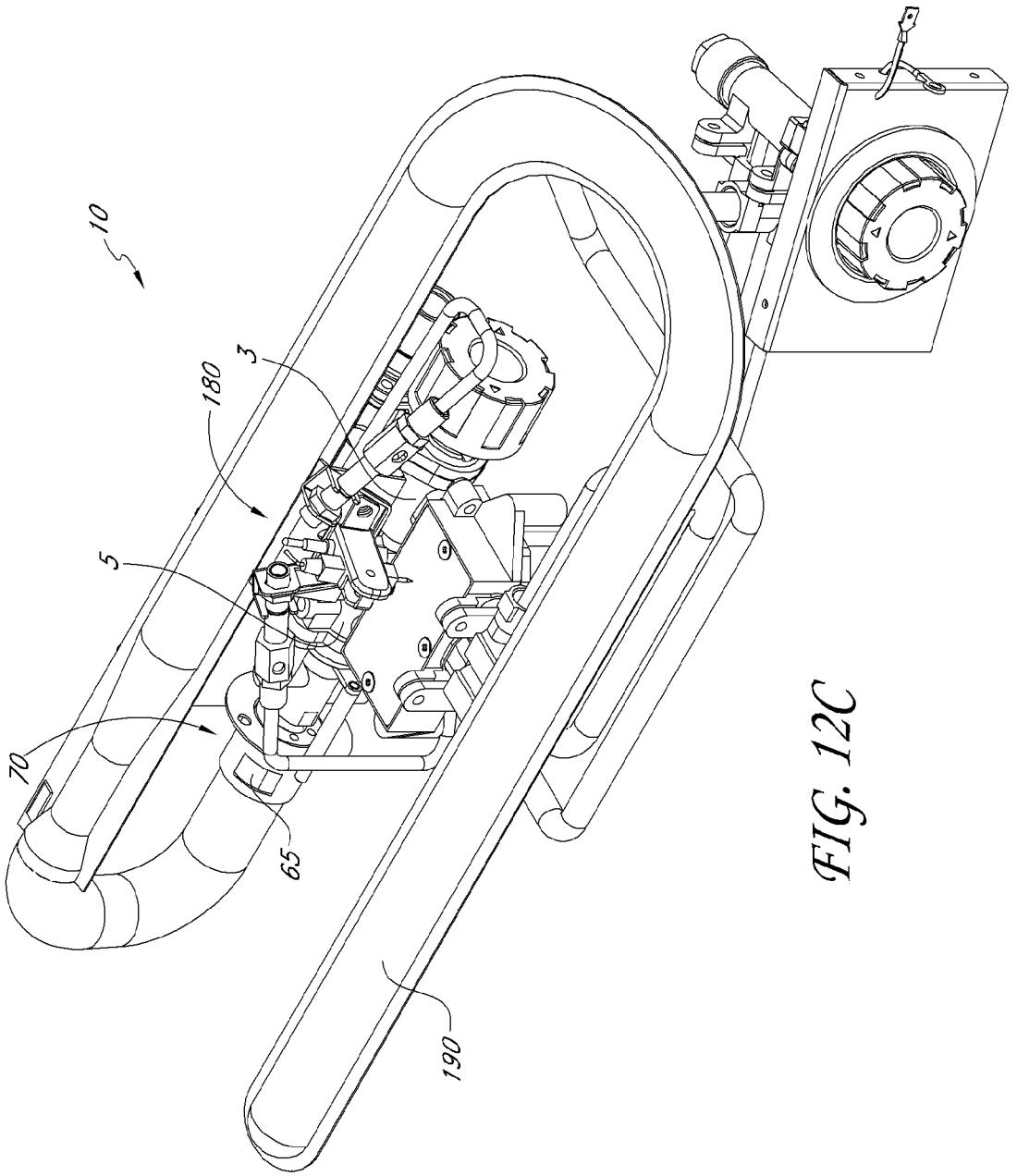

FIG. 12C

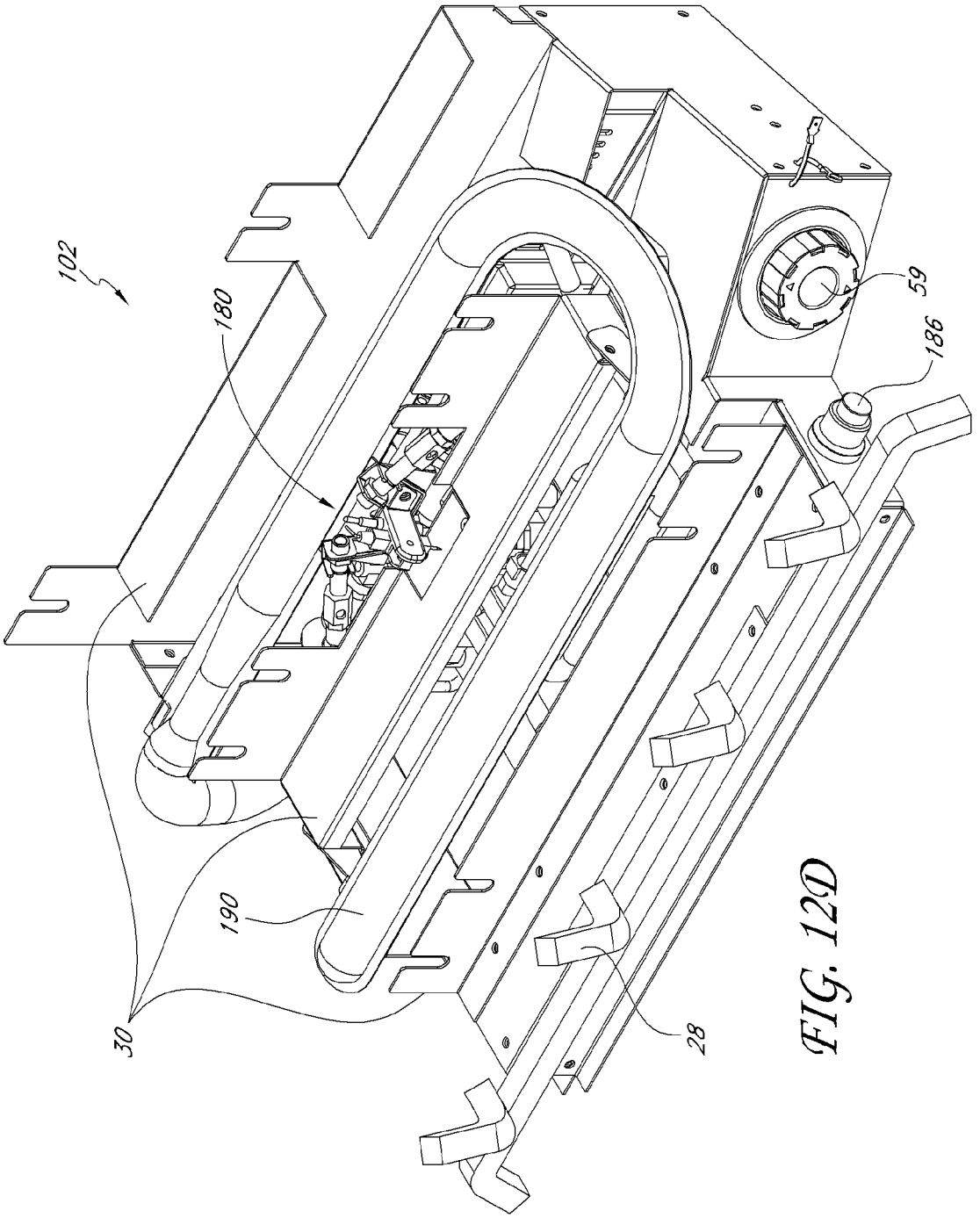

FIG. 12D

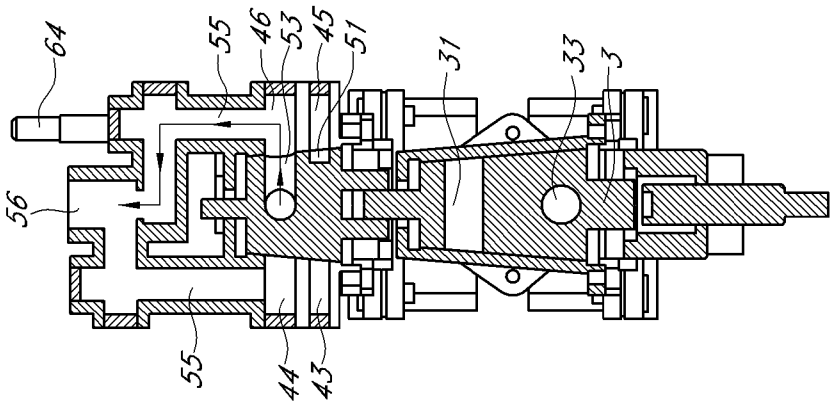

FIG. 13B

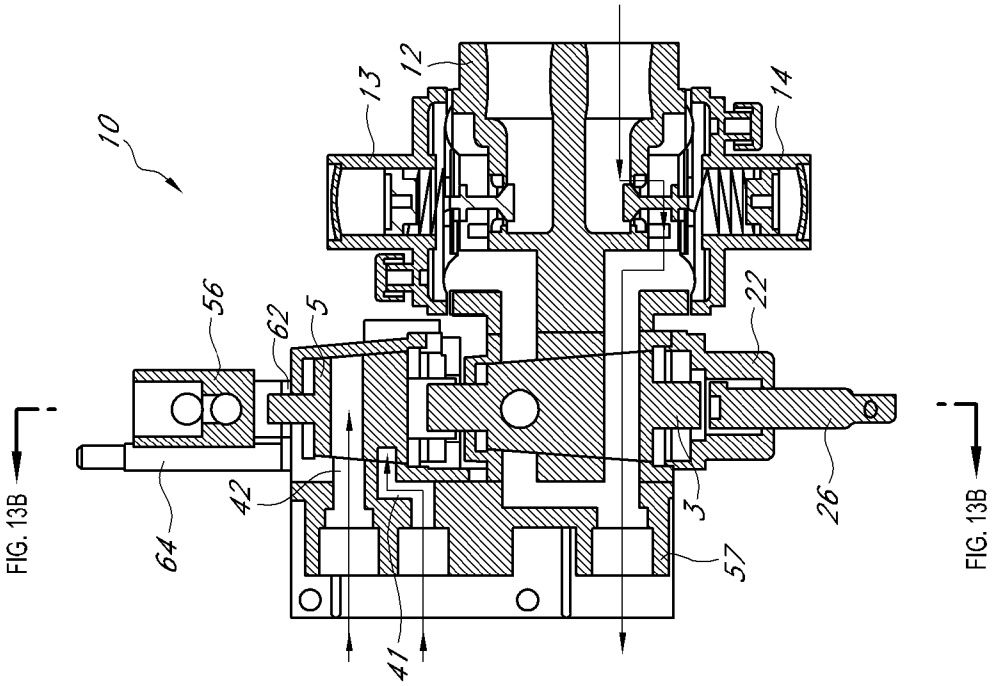

FIG. 13A

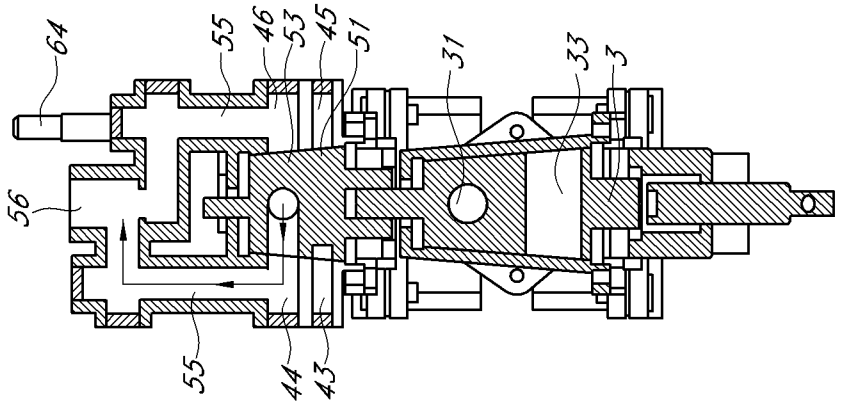

FIG. 13D

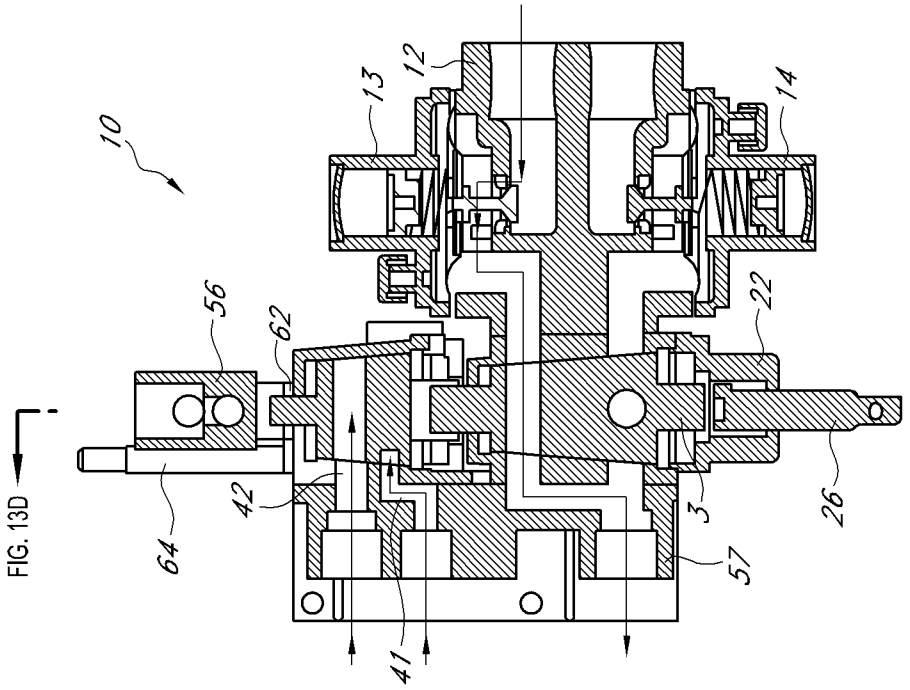

FIG. 13C

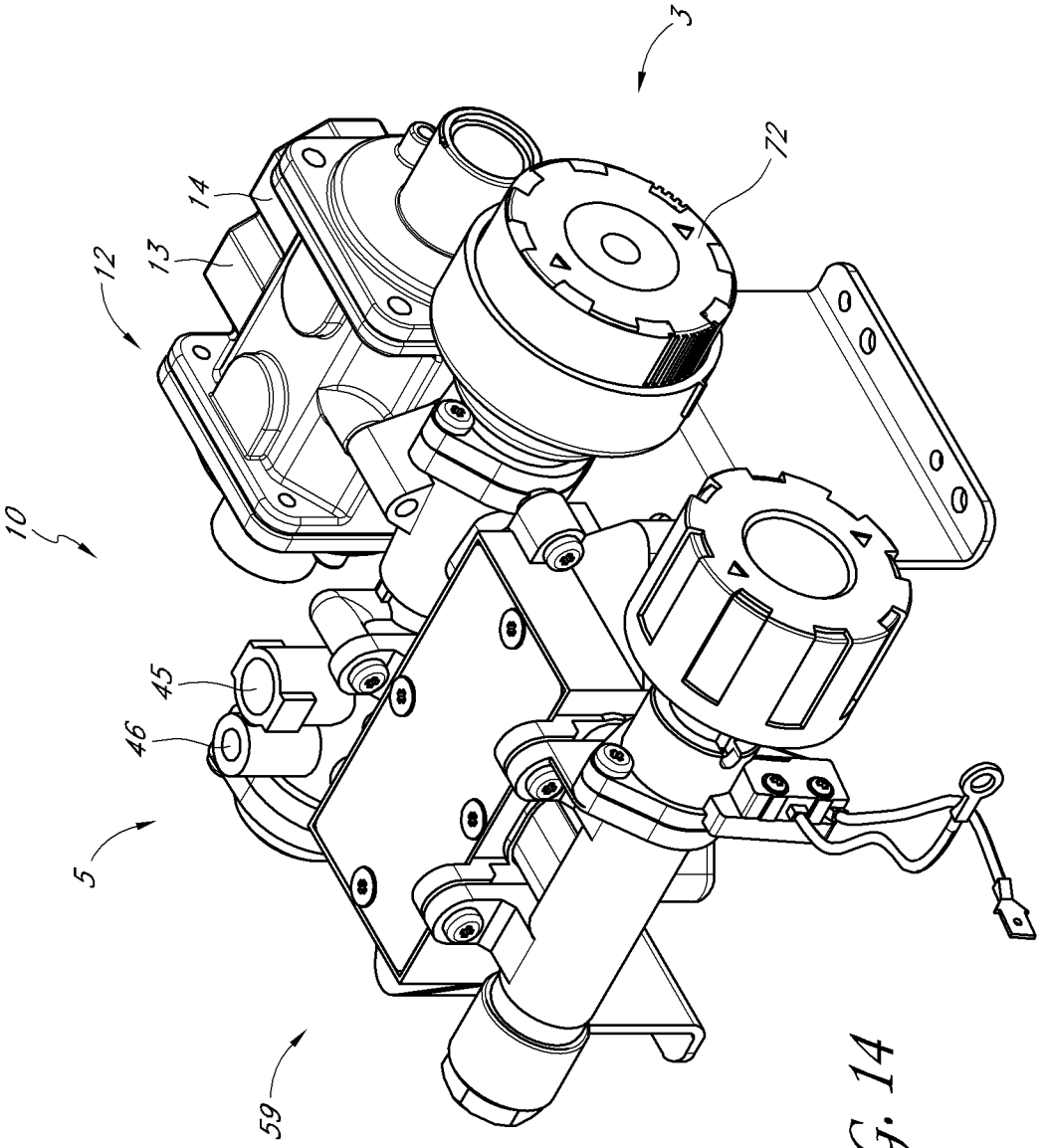

FIG. 14

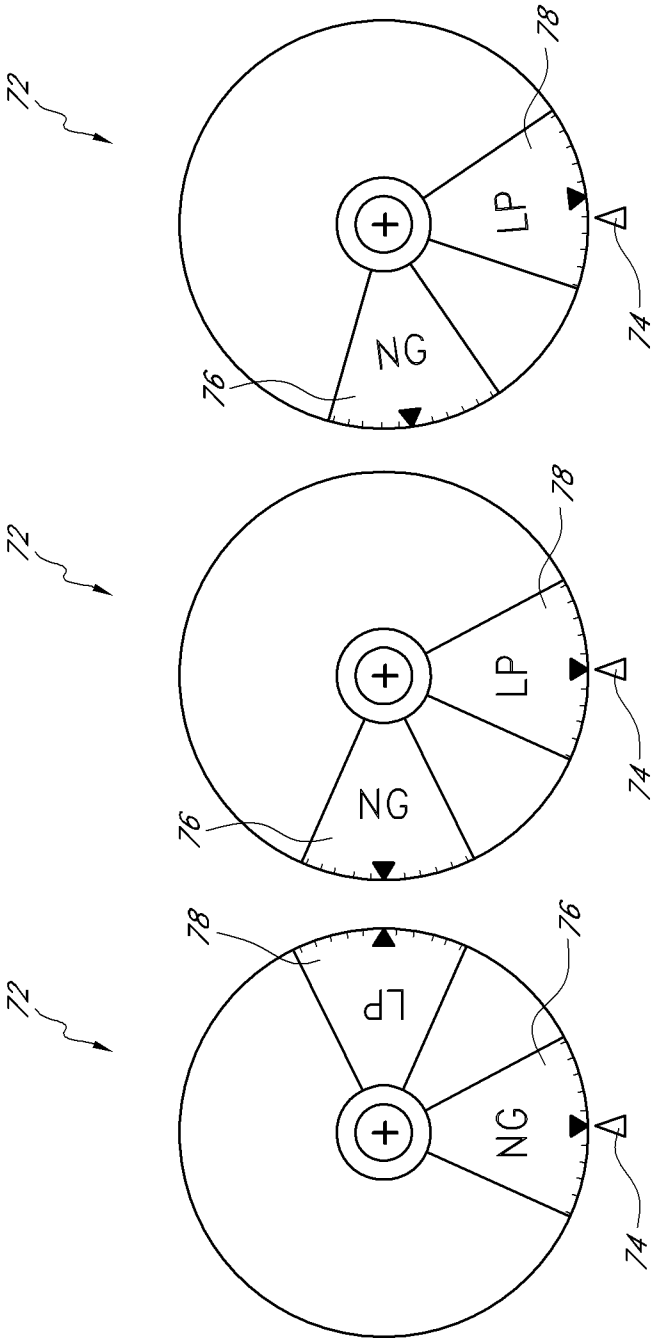

FIG. 15A

FIG. 15B

FIG. 15C

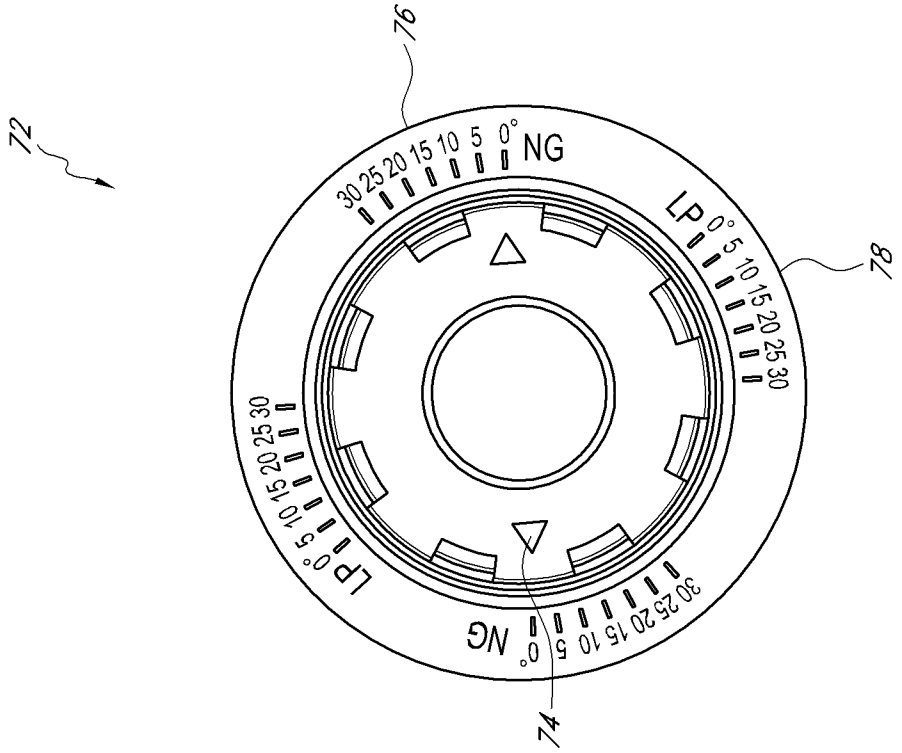

FIG. 15E

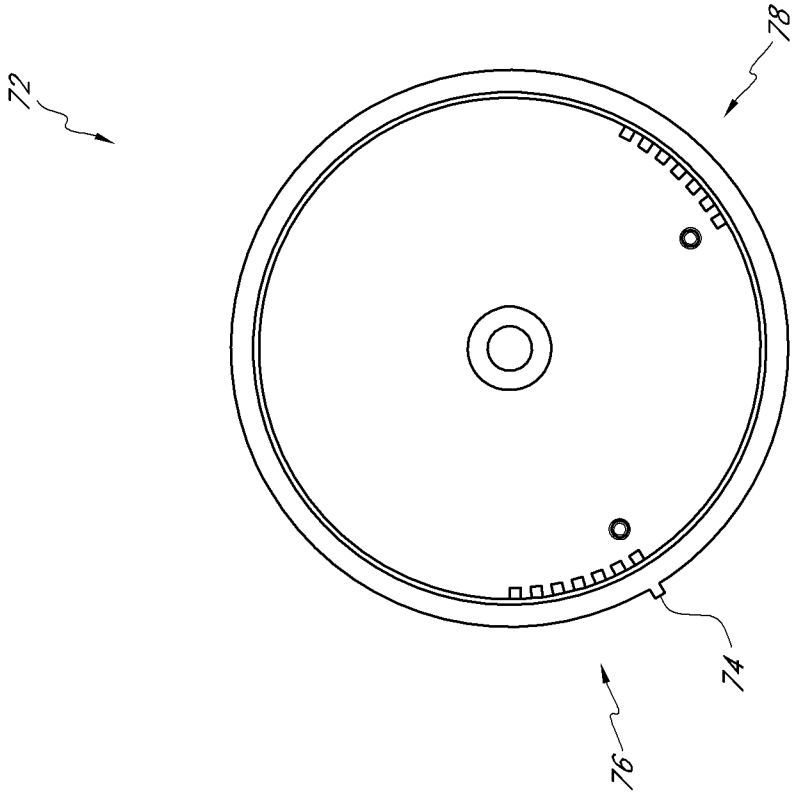

FIG. 15D

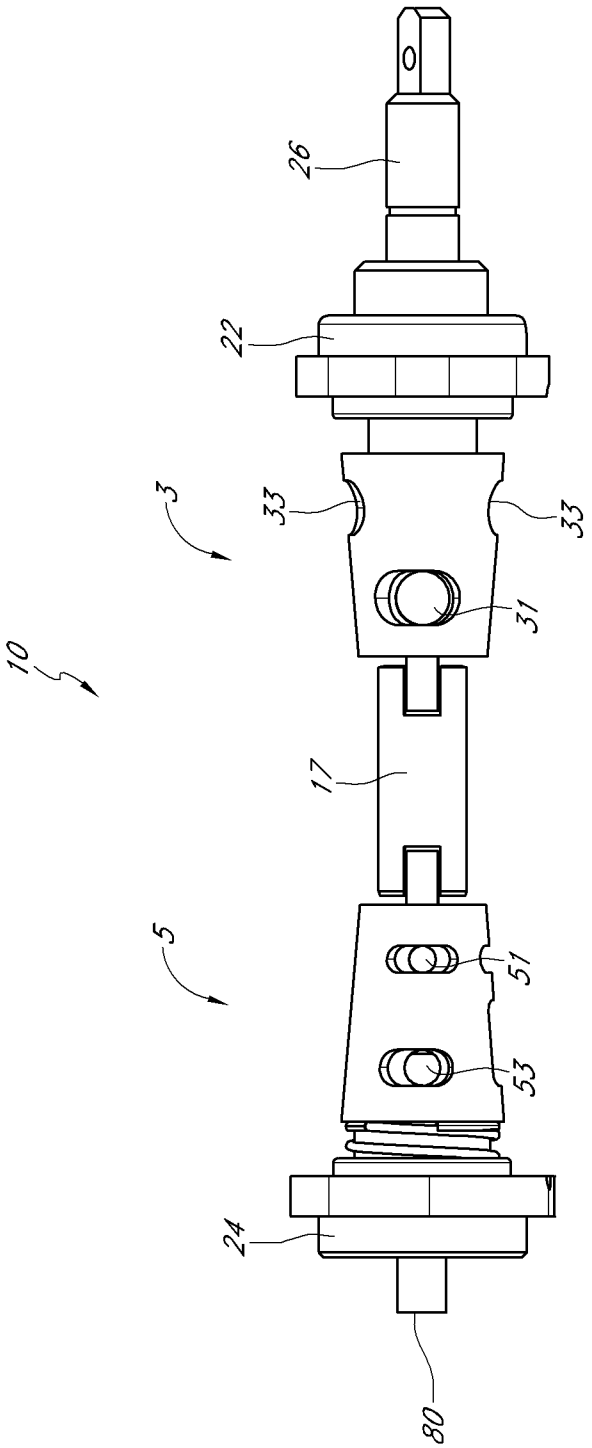

FIG. 16

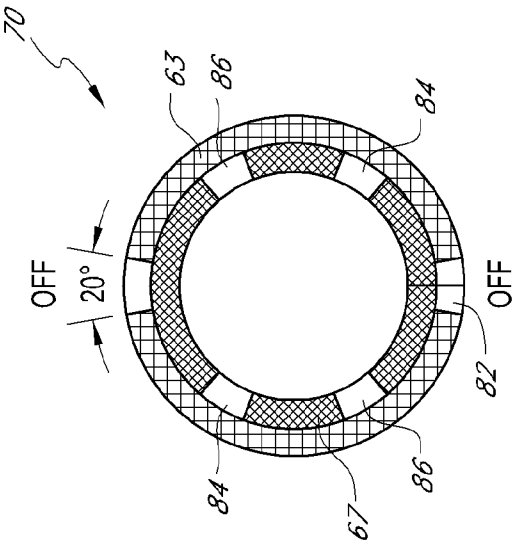

FIG. 17A

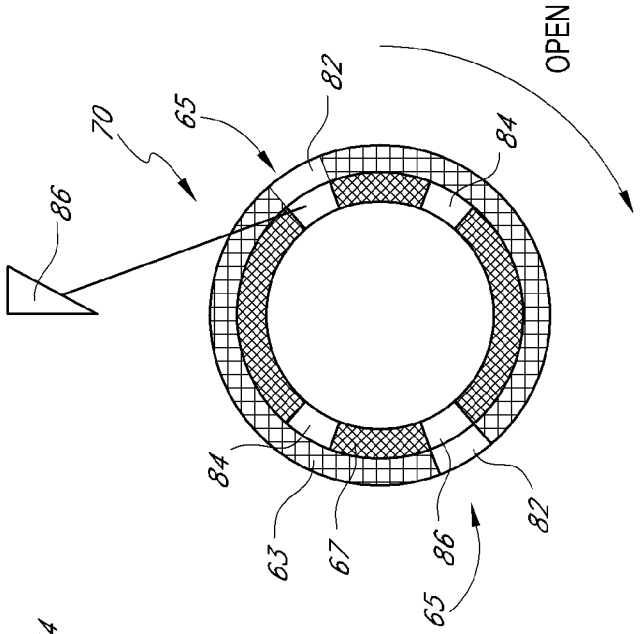

FIG. 17C

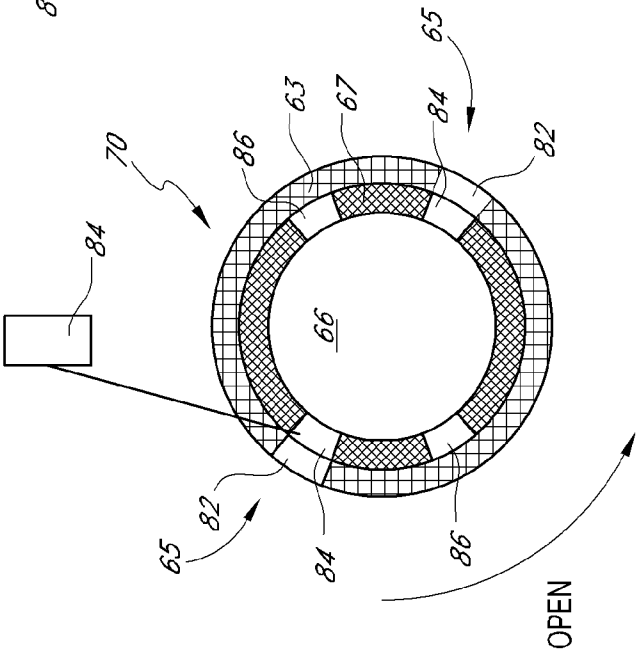

FIG. 17B

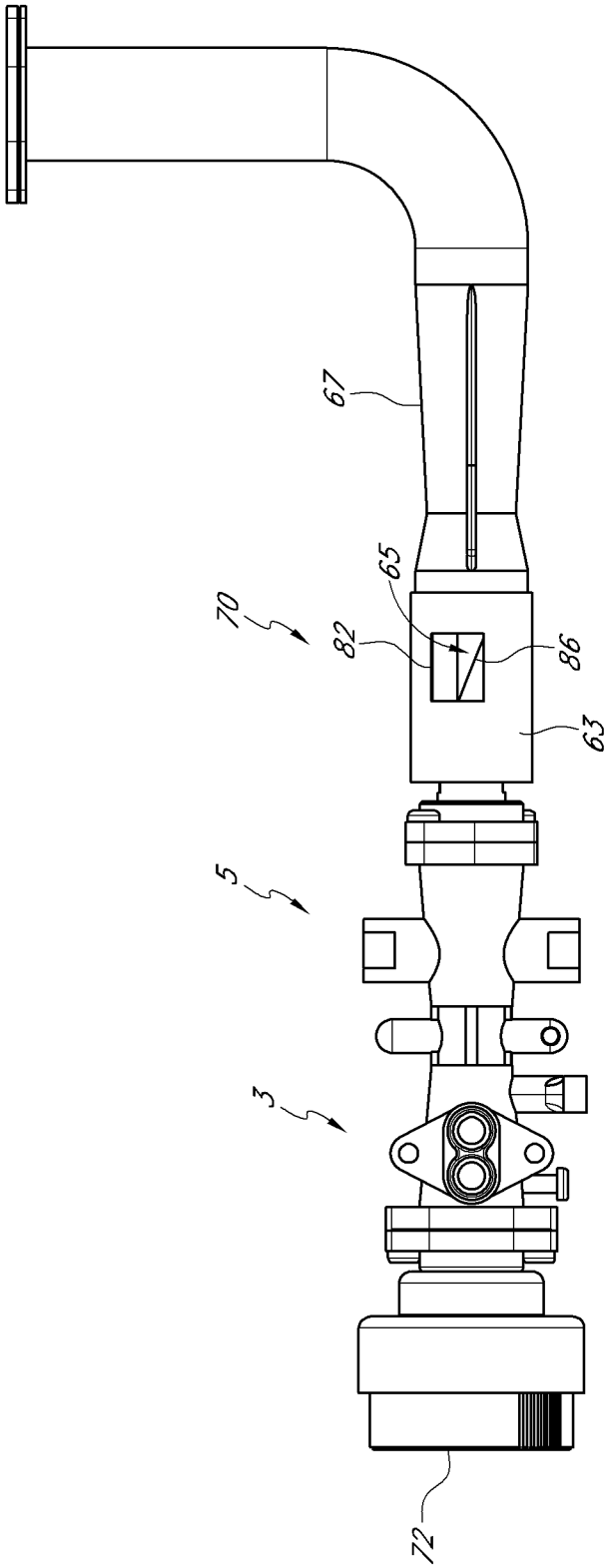

FIG. 18A

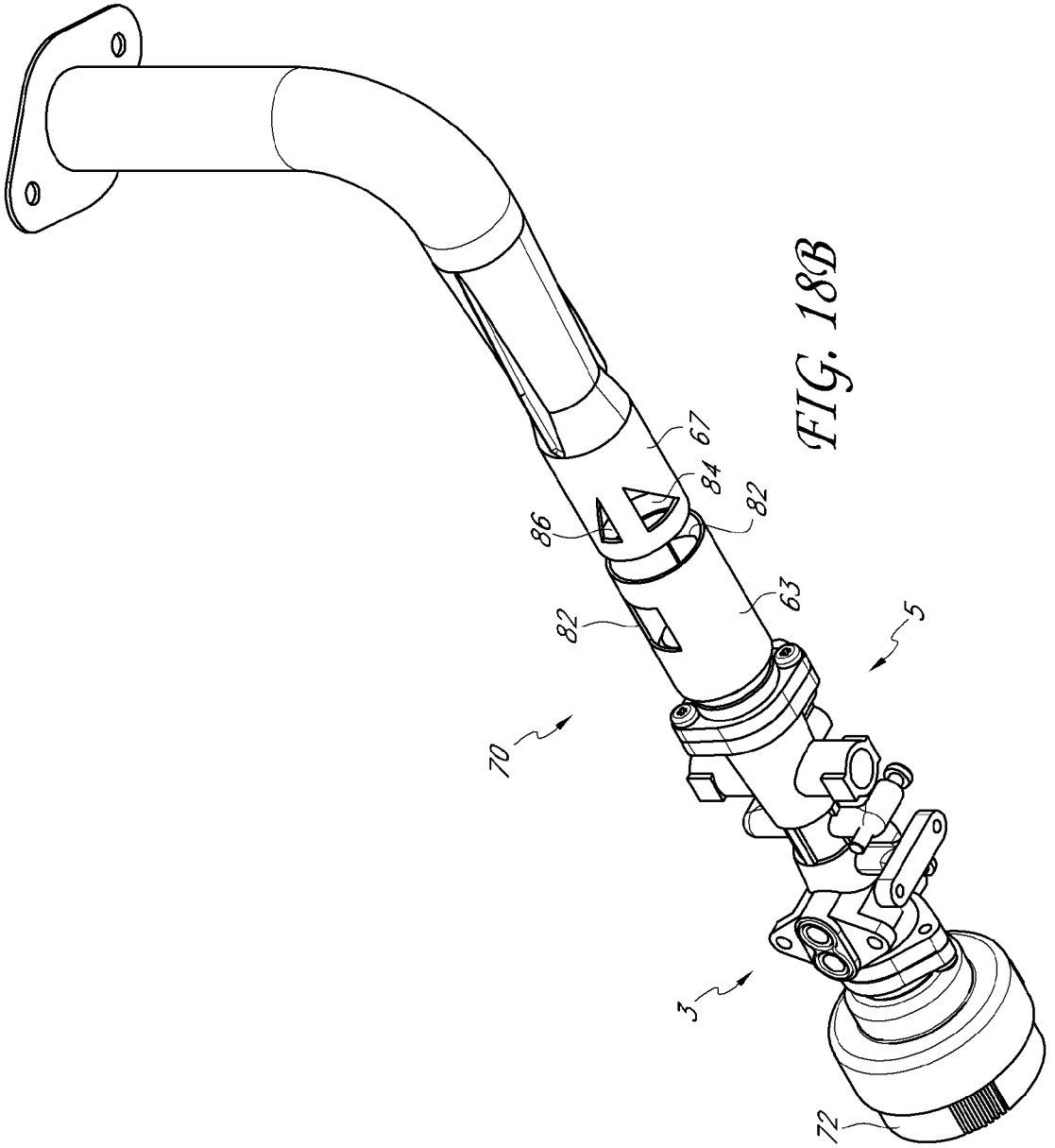

FIG. 18B

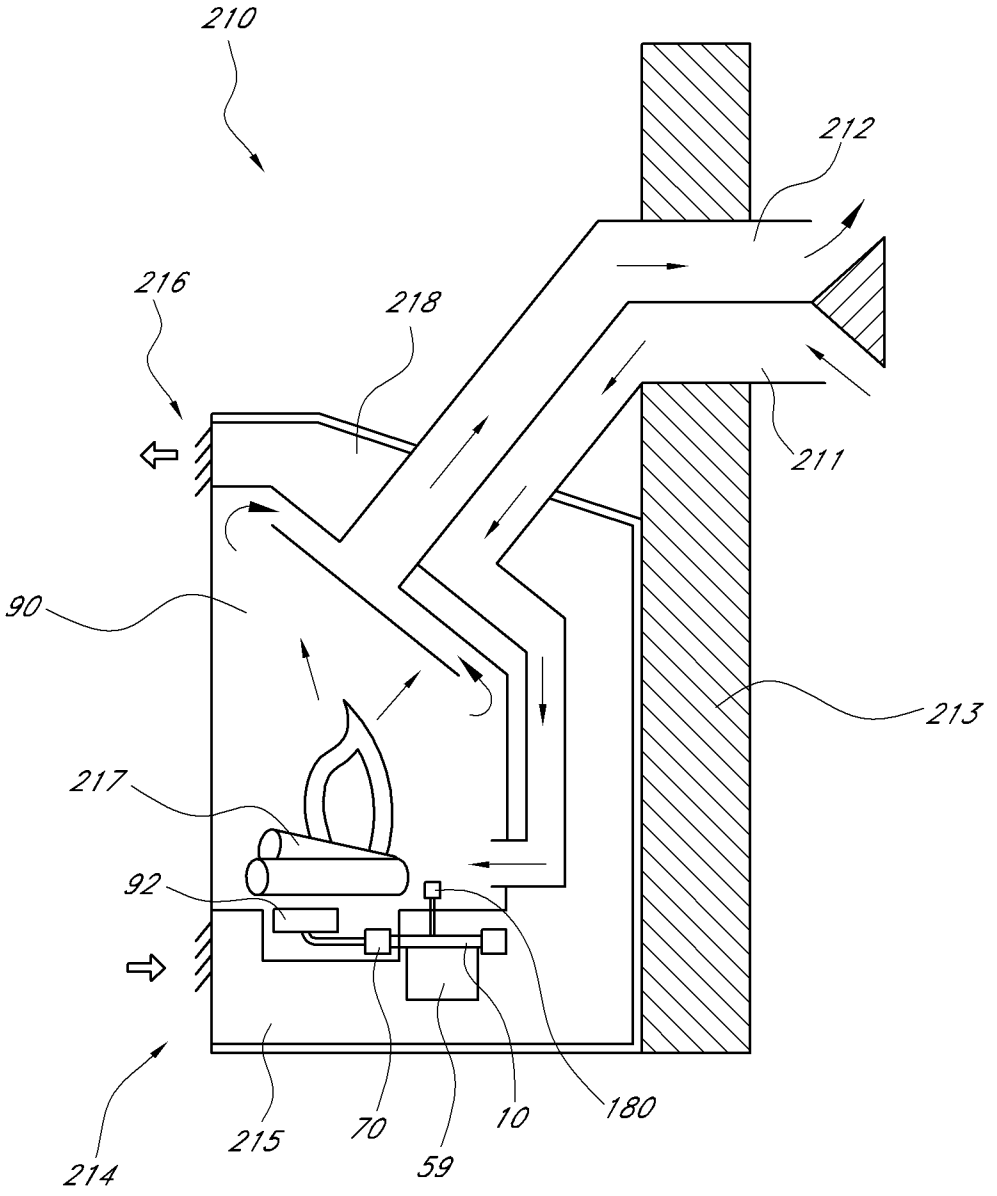

FIG. 19

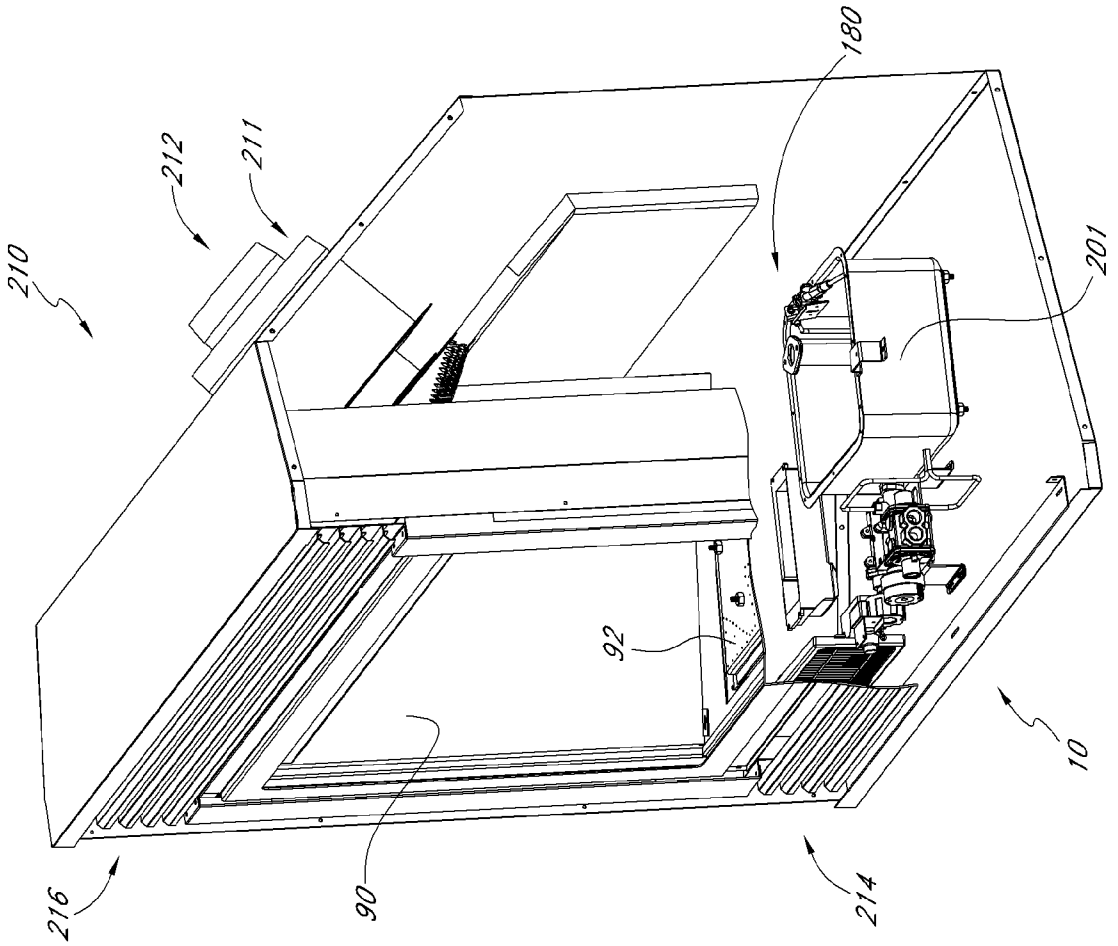

FIG. 20

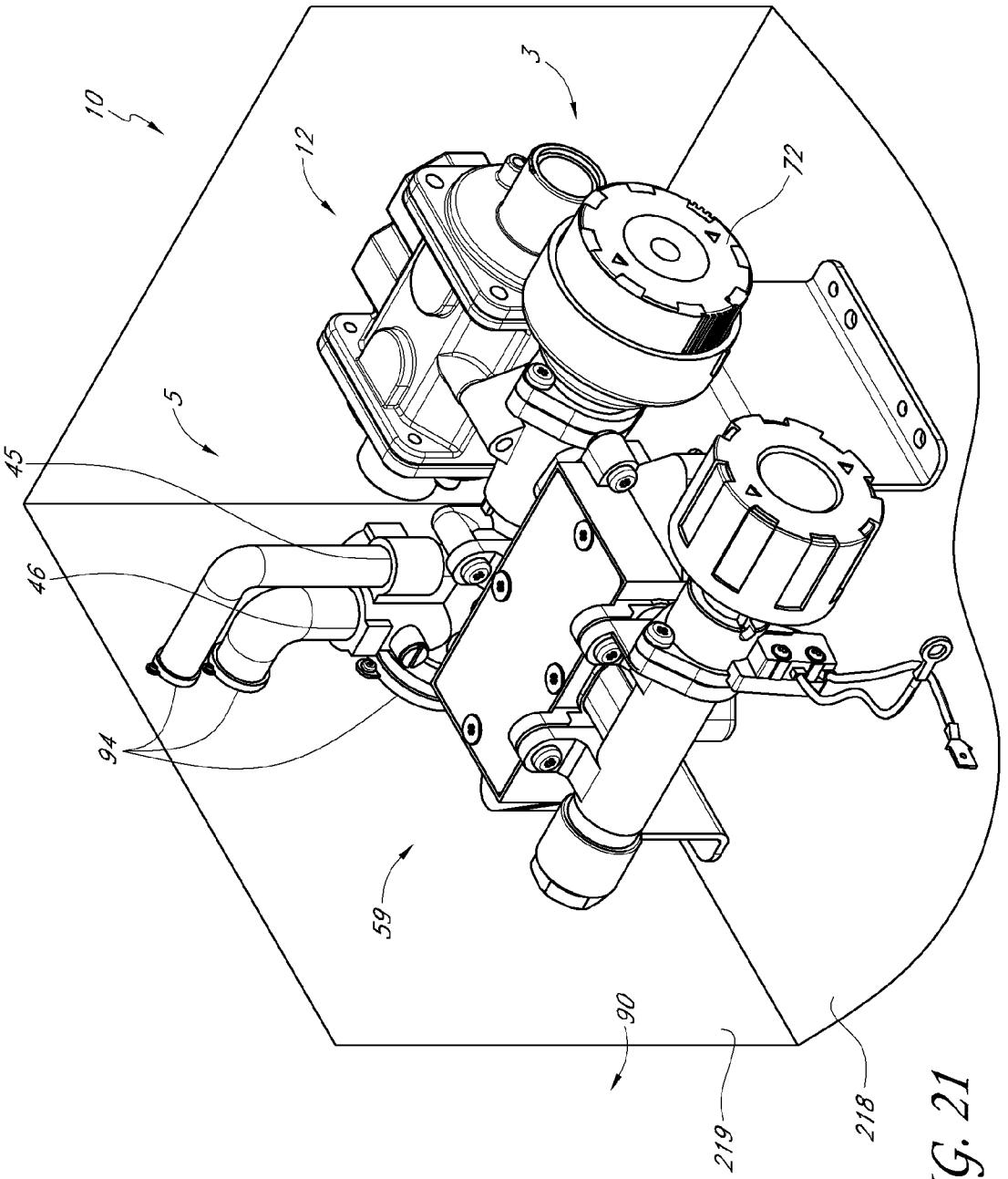

FIG. 21

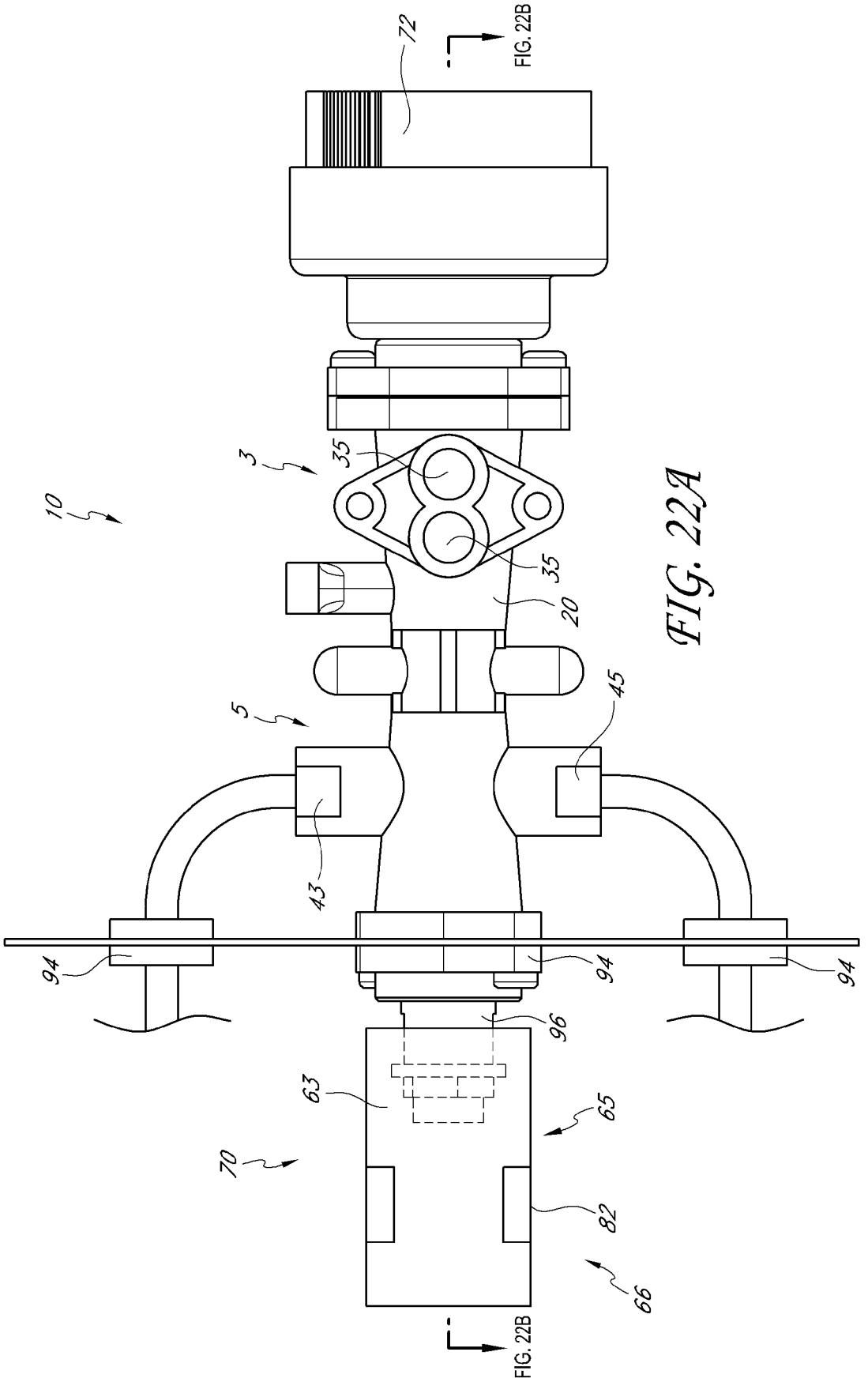

FIG. 22A

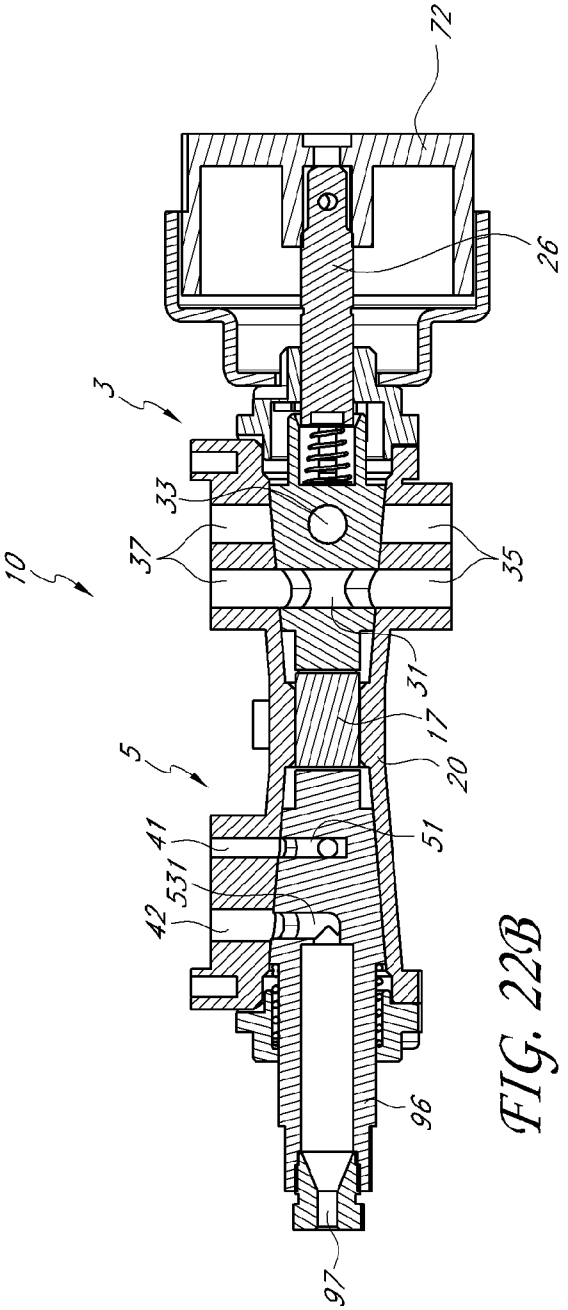

FIG. 22B

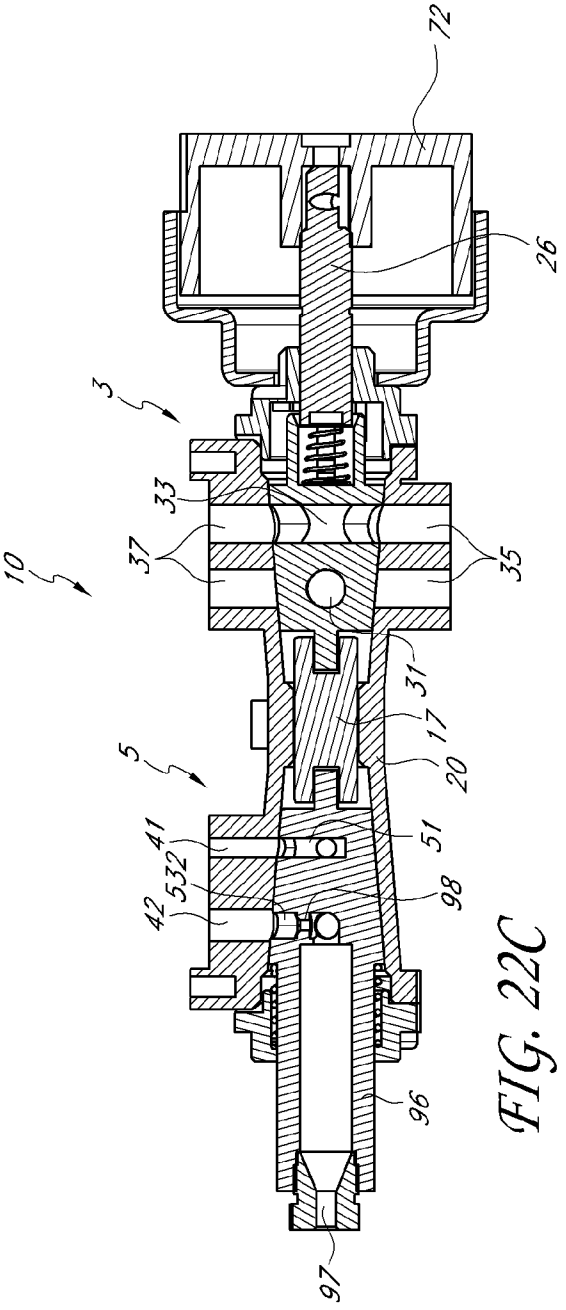

FIG. 22C

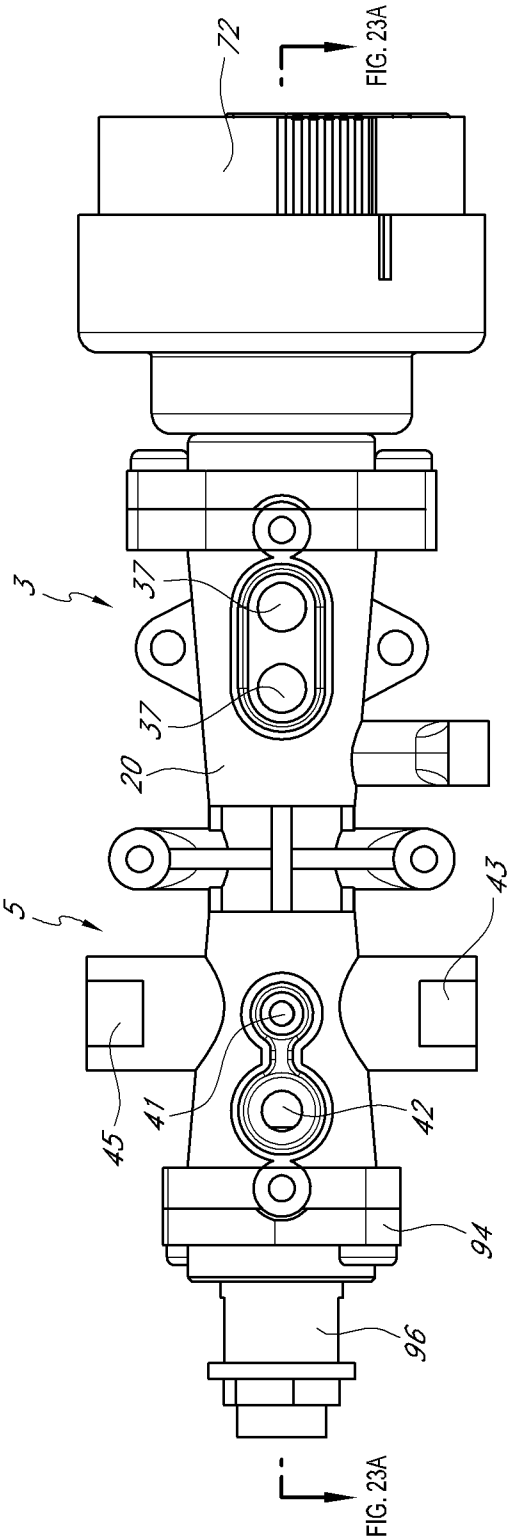

FIG. 23

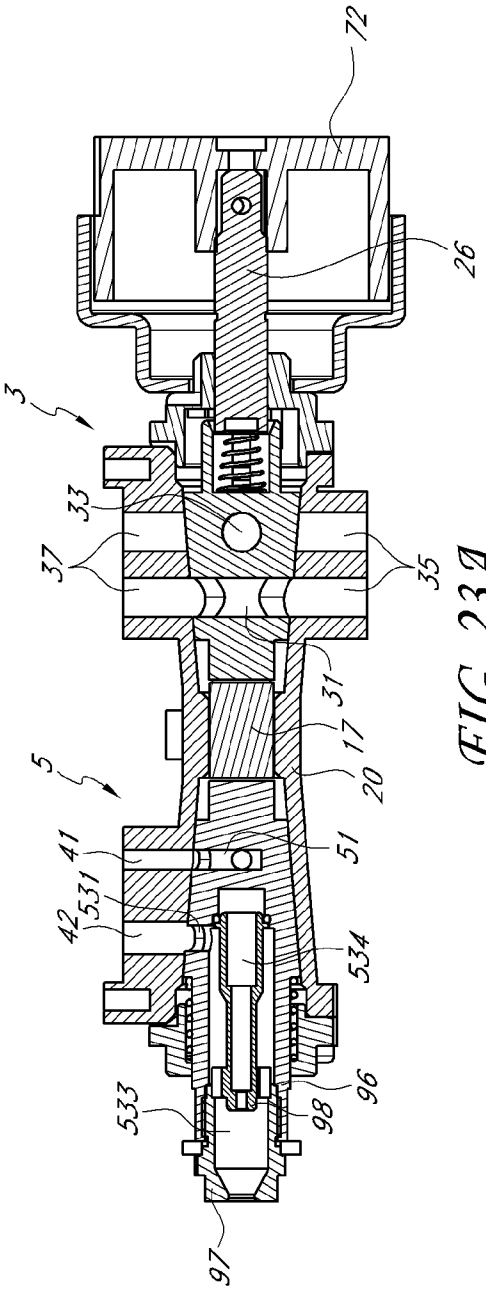

FIG. 23A

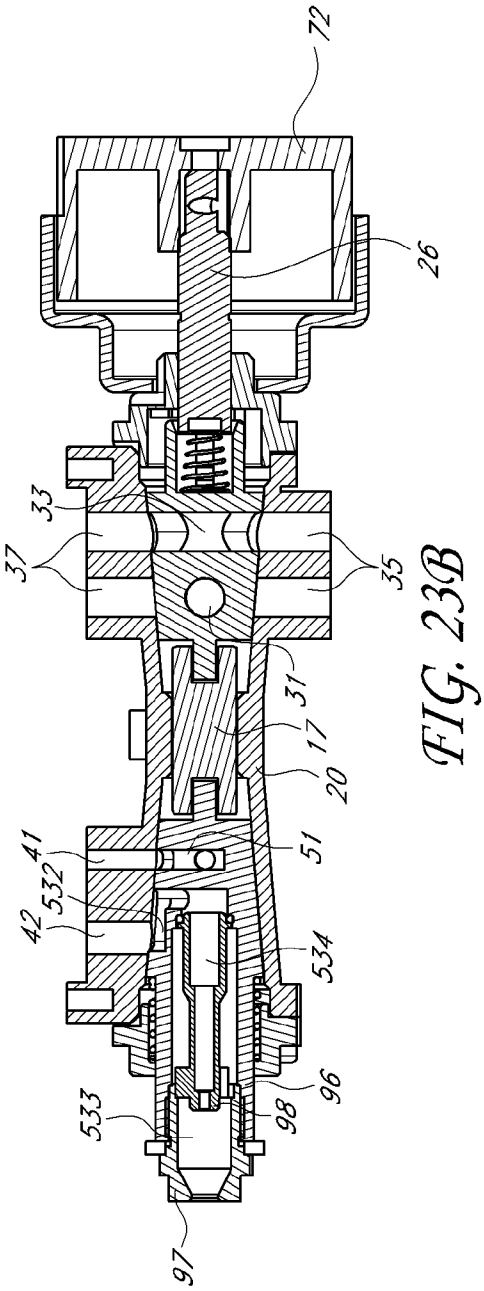

FIG. 23B

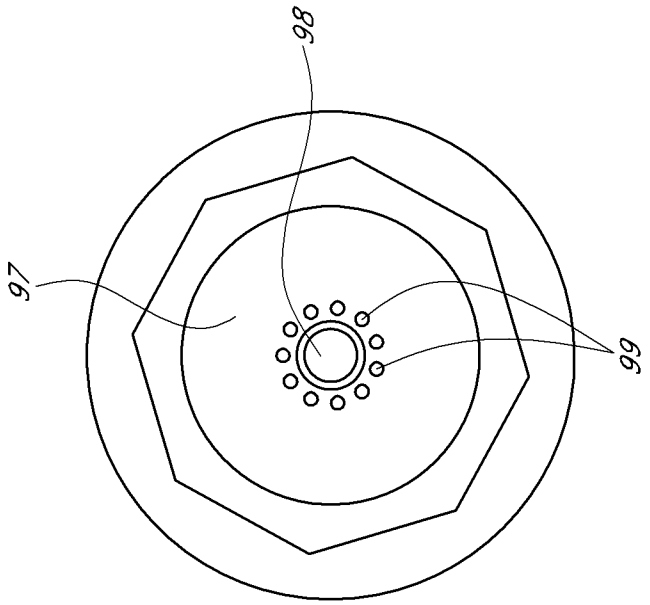

FIG. 24A

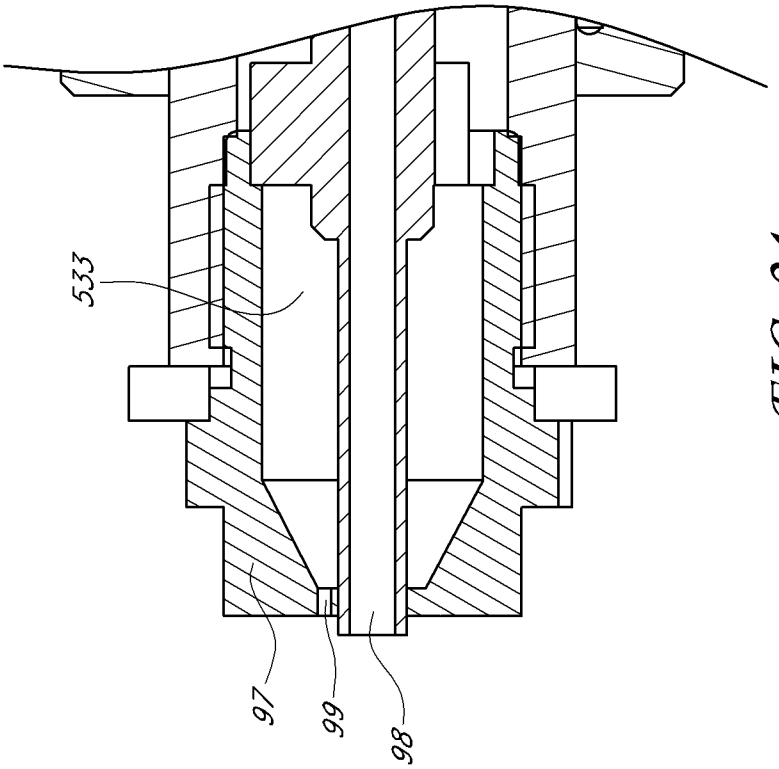

FIG. 24

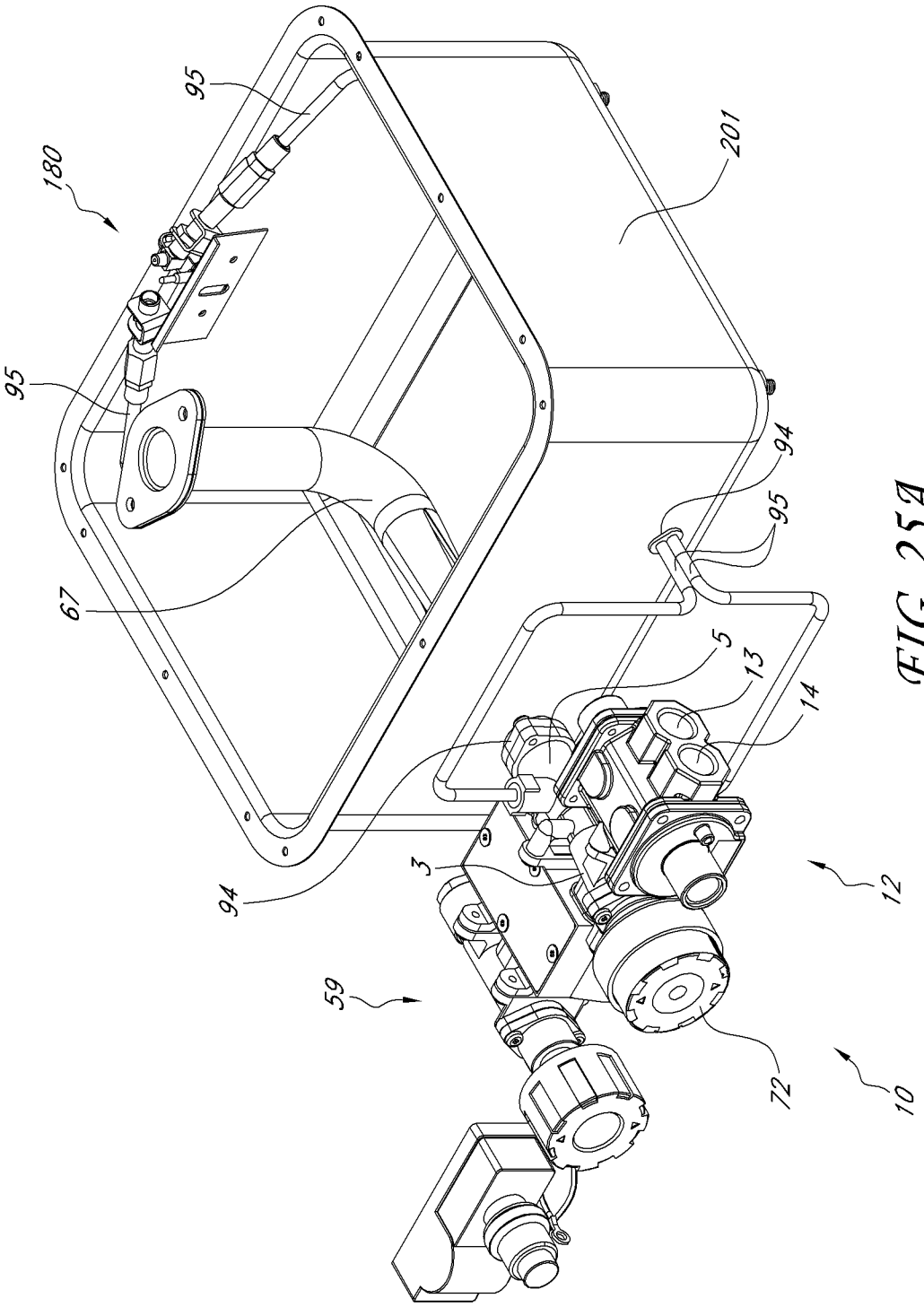

FIG. 25A

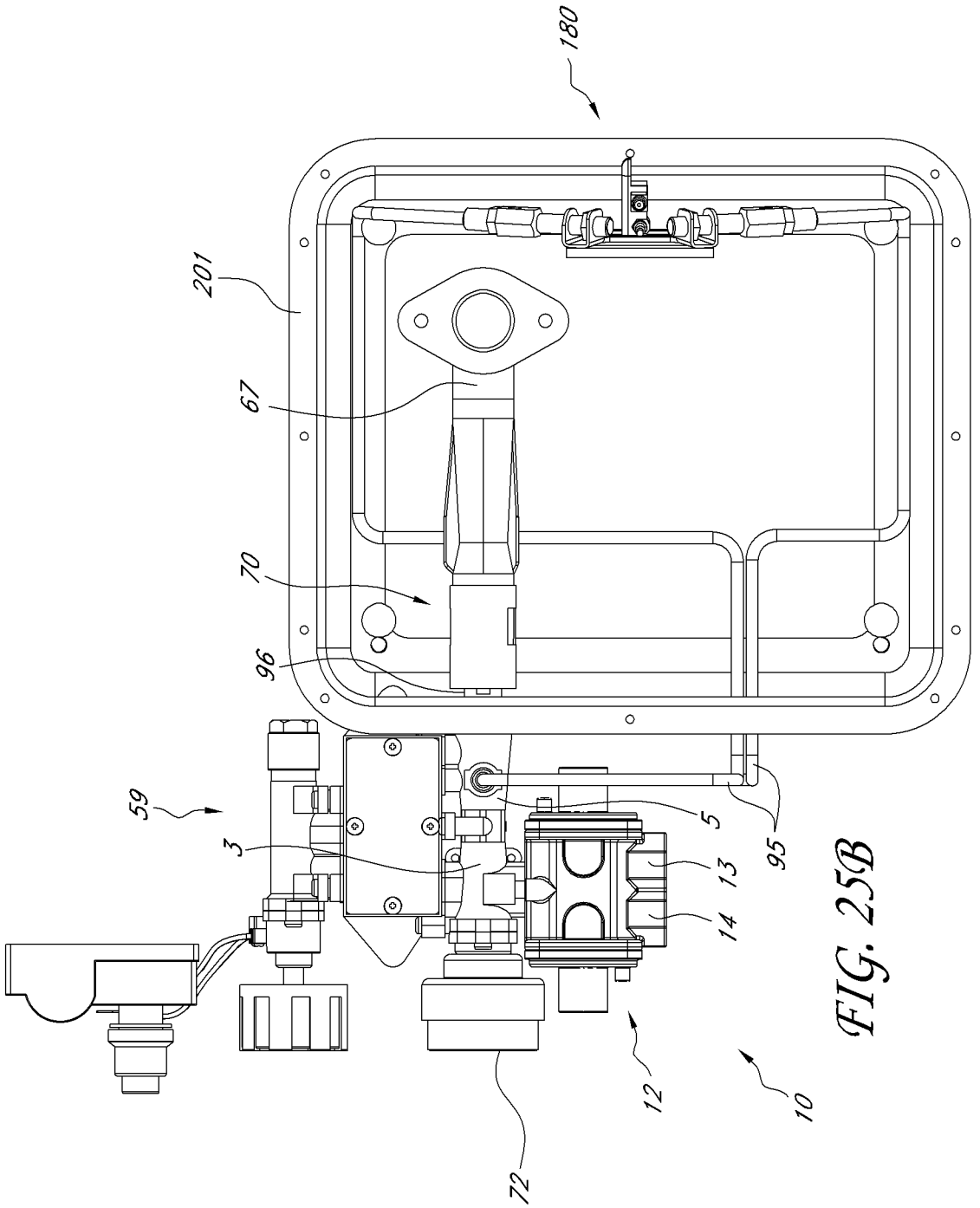

FIG. 25B

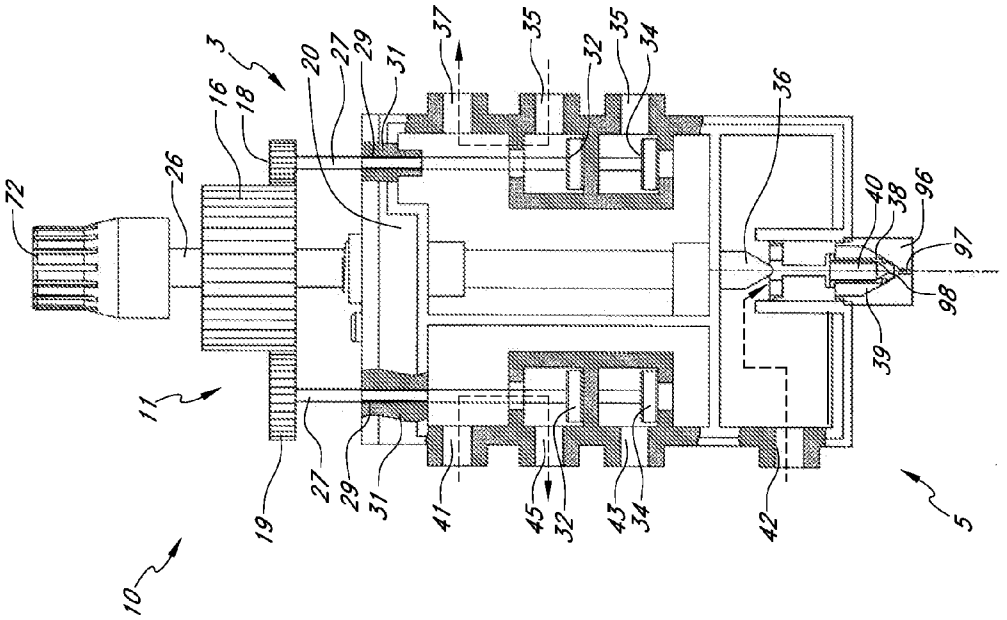

FIG. 26B

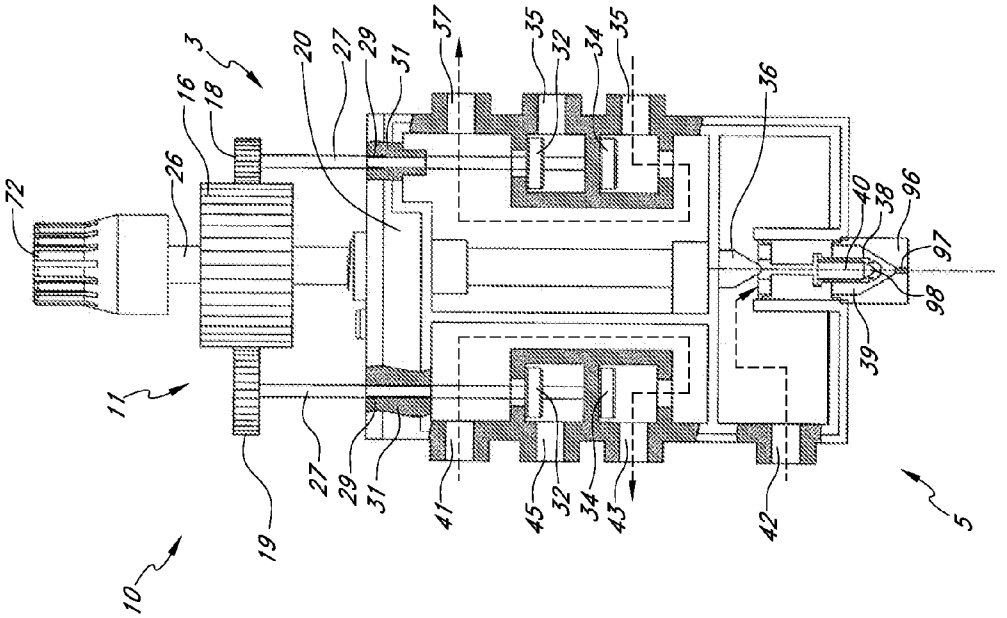

FIG. 26A

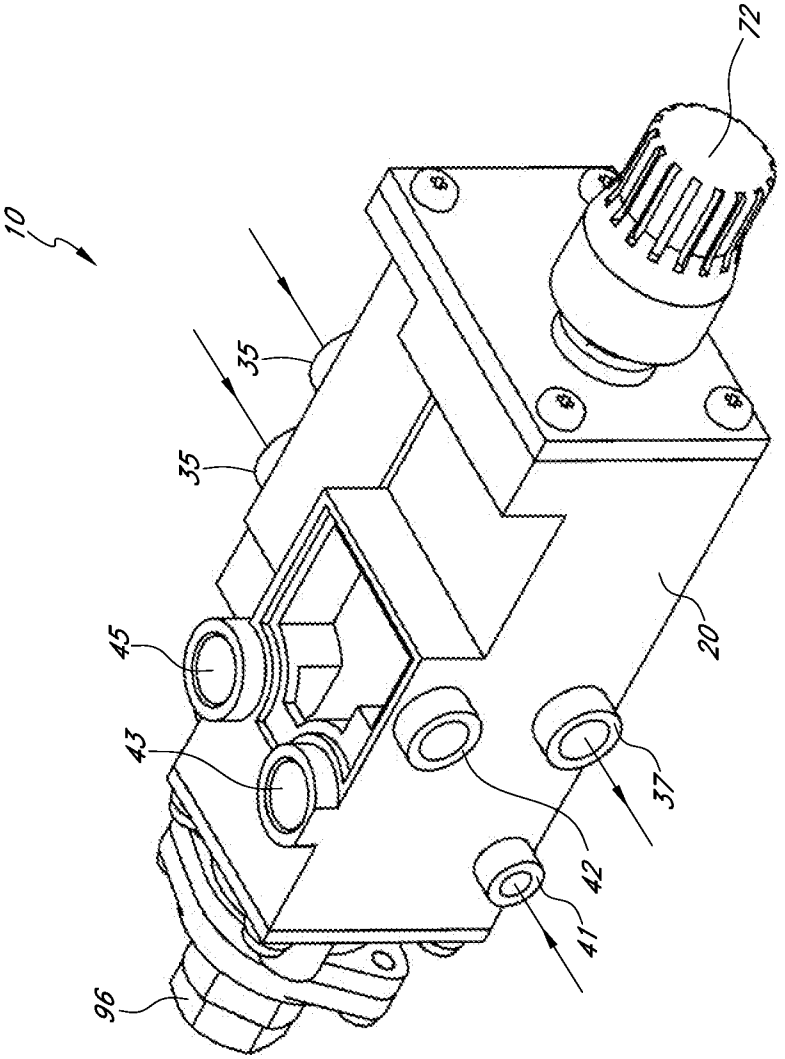

FIG. 27

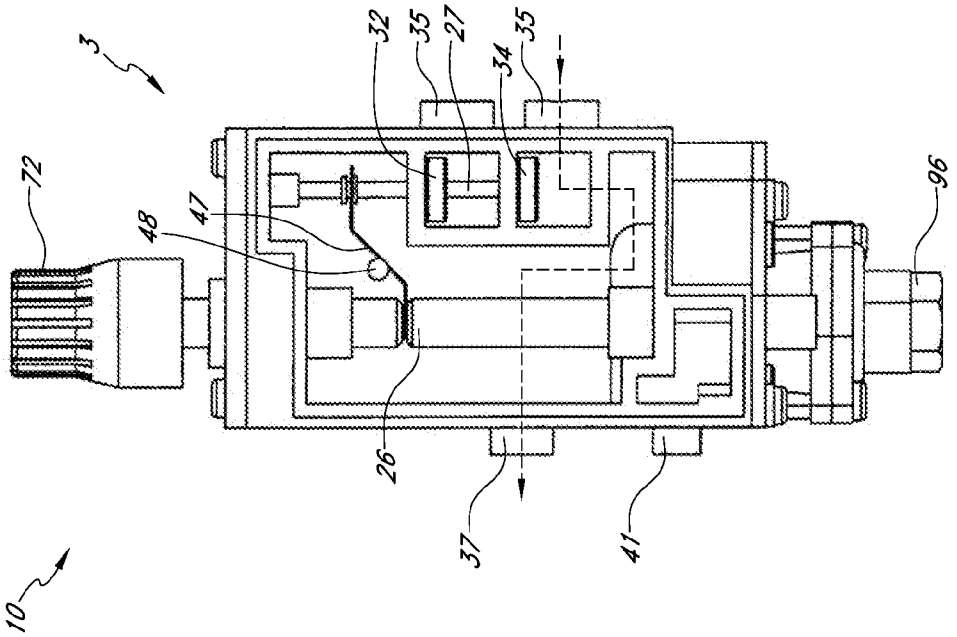

FIG. 27B

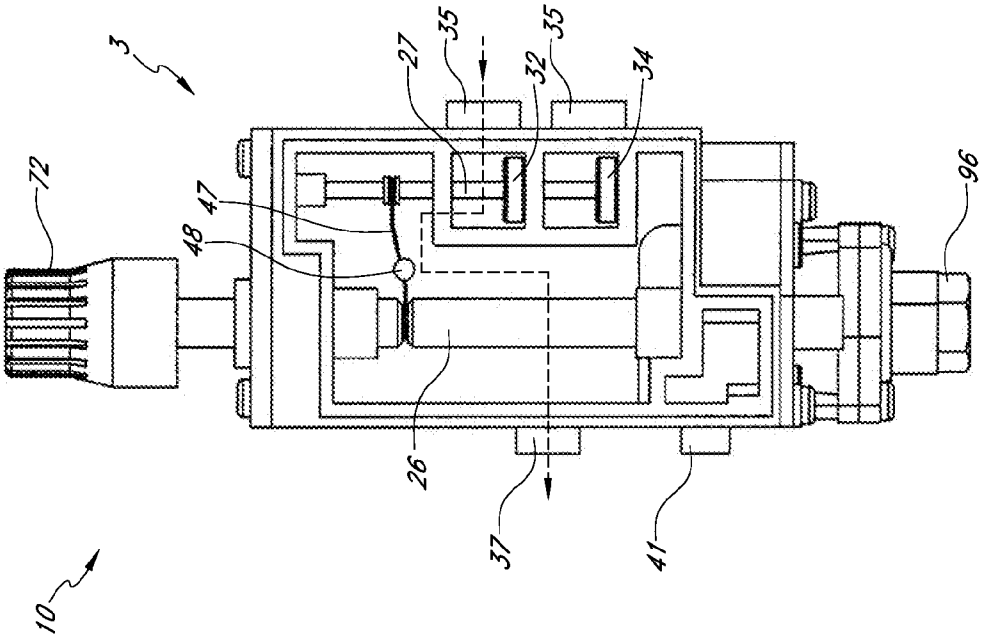

FIG. 27A

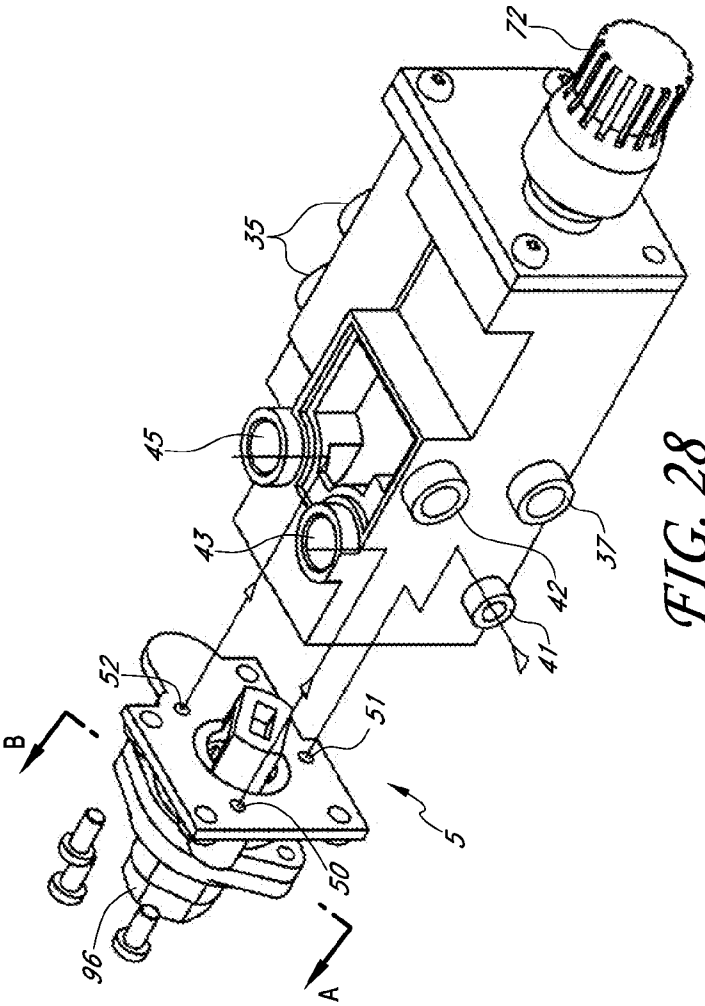

FIG. 28

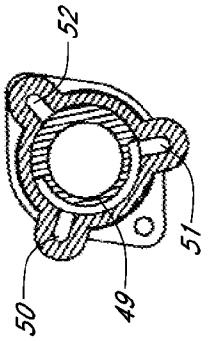

FIG. 28B

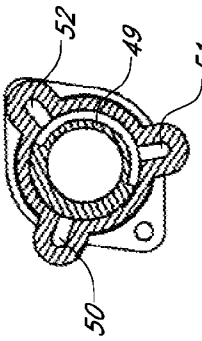

FIG. 28A

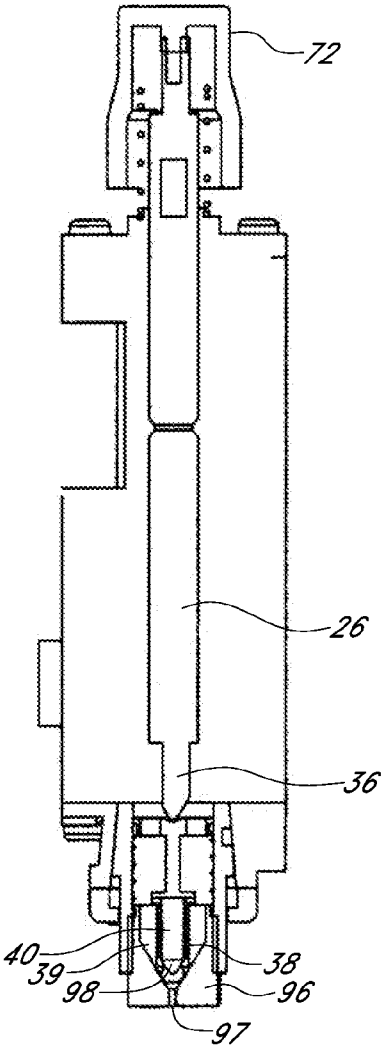

FIG. 29

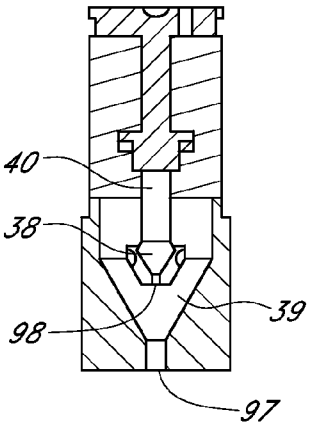

FIG. 30

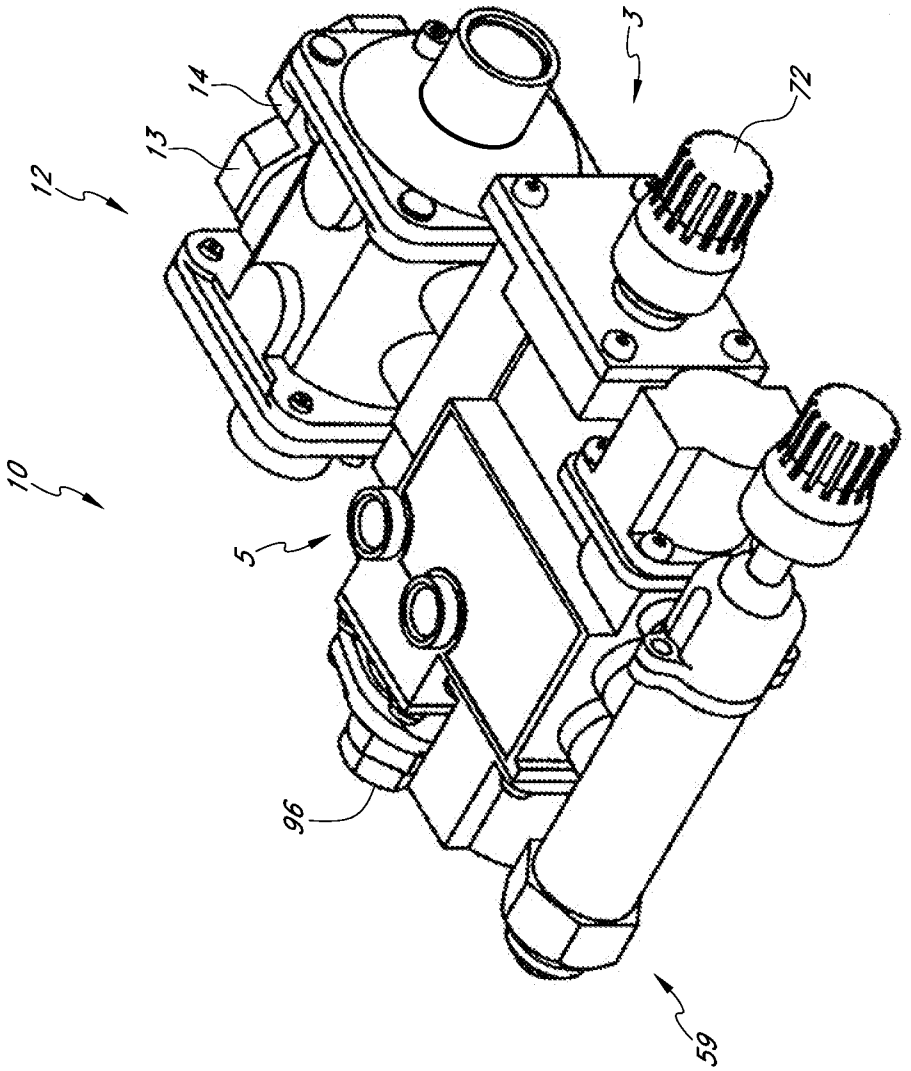

FIG. 31

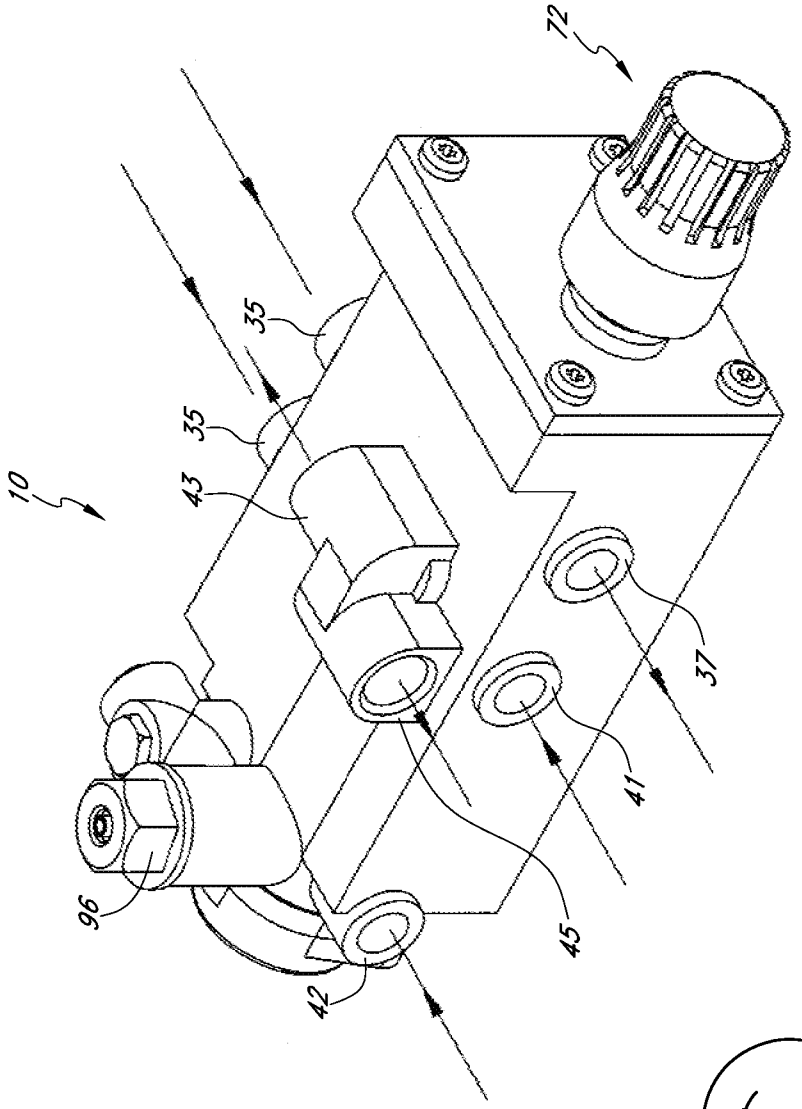

FIG. 32

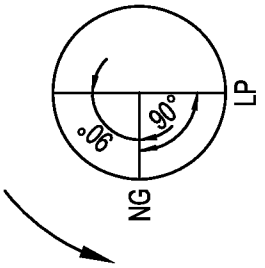

FIG. 32A

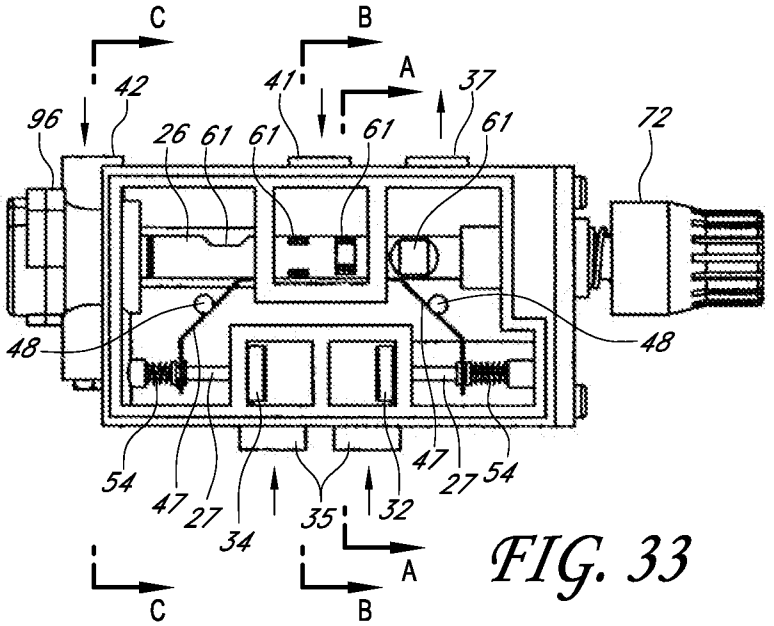

FIG. 33

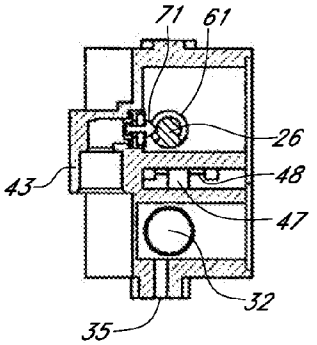

FIG. 33A

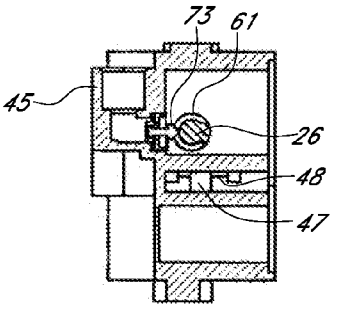

FIG. 33B

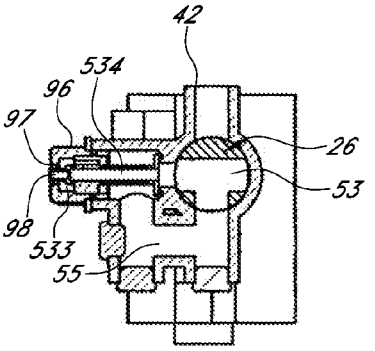

FIG. 33C

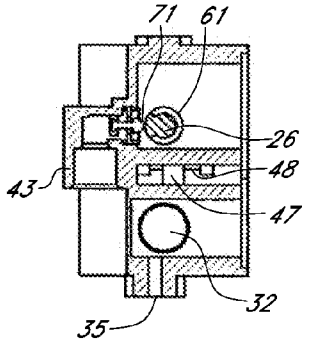

FIG. 34A

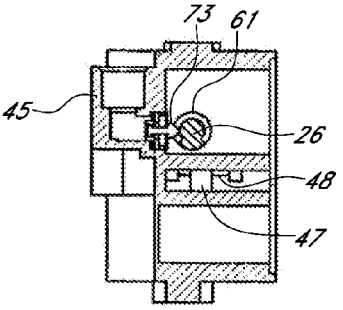

FIG. 34B

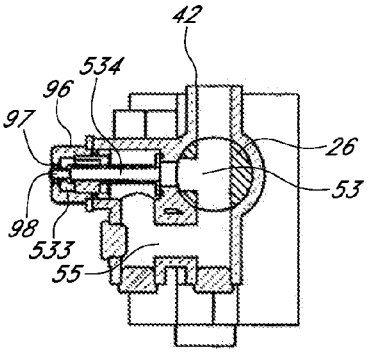

FIG. 34C

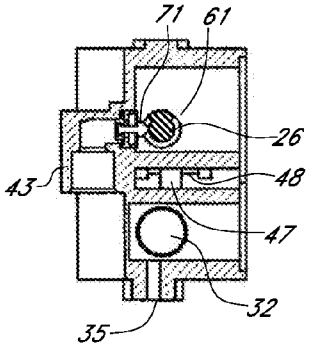

FIG. 35A

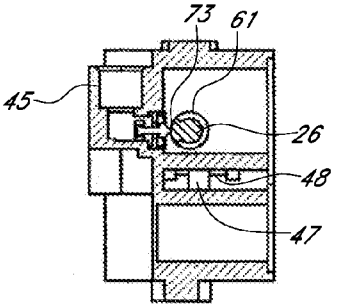

FIG. 35B

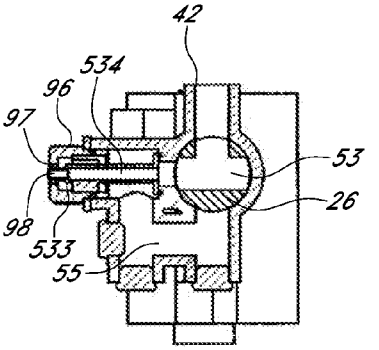

FIG. 35C

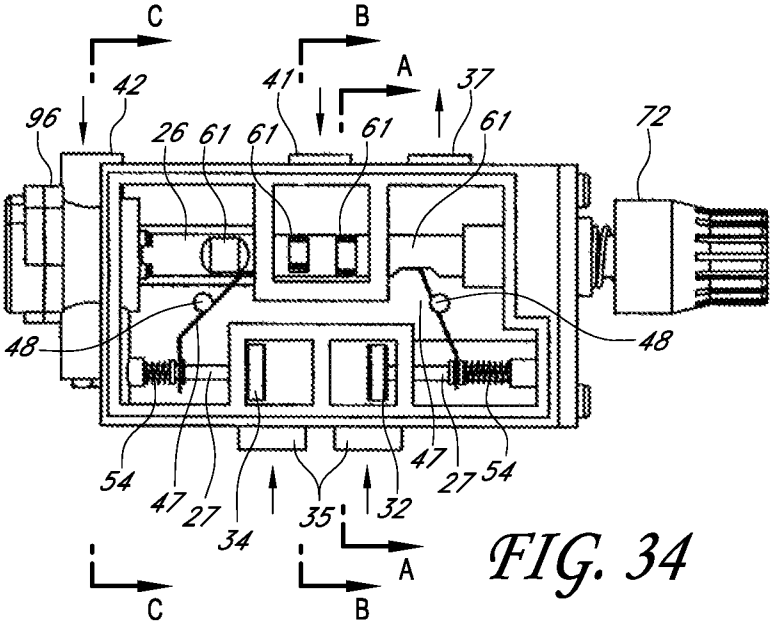
C
B
A
42
41
37
96
26
61
61
61
61
72
48
48
54
47
27
34
35
32
47
27
54
A
C
B

FIG. 34

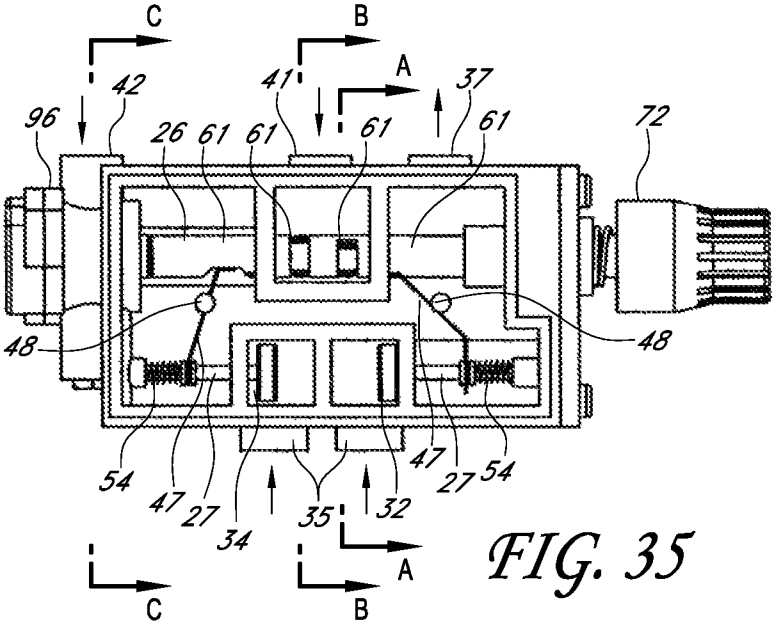
C
B
A
42
41
37
96
26
61
61
61
61
72
48
48
54
47
27
34
35
32
47
27
54
A
C
B

FIG. 35

DUAL FUEL HEATING SOURCE

CROSS-REFERENCE TO RELATED APPLICATIONS

This application claims priority to U.S. Provisional Application Nos.: (1) 61/221,521, filed Jun. 29, 2009; (2) 61/221,520, filed Jun. 29, 2009; (3) 61/221,529, filed Jun. 29, 2009; (4) 61/221,528, filed Jun. 29, 2009; (5) 61/287,147, filed Dec. 16, 2009; (6) 61/286,355, filed Dec. 14, 2009; (7) 61/286,354, filed Dec. 14, 2009; (8) 61/286,352, filed Dec. 14, 2009; and (9) 61/304,373, filed Feb. 12, 2010; the entire contents of all of which are hereby incorporated by reference herein and made a part of this specification. The following U.S. patent application Nos. are also incorporated by reference herein and made a part of this specification: Ser. No. 11/443,484, filed May 30, 2006 (now U.S. Pat. No. 7,607,426); Ser. No. 11/443,446, filed May 30, 2006 (now U.S. Pat. No. 7,677,236); Ser. No. 11/443,492, filed May 30, 2006 (now U.S. Pat. No. 7,434,447); Ser. No. 11/443,473, filed May 30, 2006; Ser. No. 11/649,976, filed Jan. 5, 2007; Ser. No. 12/047,206, filed Mar. 12, 2008; Ser. No. 12/047,156, filed Mar. 12, 2008; and Ser. No. 12/048,191, filed Mar. 13, 2008.

BACKGROUND OF THE INVENTION

1. Field of the Invention

Certain embodiments disclosed herein relate generally to a heating source for use in a gas appliance particularly adapted for dual fuel use. The gas appliance can include, but is not limited to: heaters, boilers, dryers, washing machines, ovens, fireplaces, stoves, etc.

2. Description of the Related Art

Many varieties of heating sources, such as heaters, boilers, dryers, washing machines, ovens, fireplaces, stoves, and other heat-producing devices utilize pressurized, combustible fuels. Some such devices operate with liquid propane, while others operate with natural gas. However, such devices and certain components thereof have various limitations and disadvantages.

SUMMARY OF THE INVENTION

According to certain embodiments, a dual fuel heating source can comprise a first pressure regulator to regulate a flow of a first fuel; a second pressure regulator to regulate a flow of a second fuel different from the first fuel and at a higher pressure than the first fuel; and a fuel selector valve. The fuel selector valve can have a first position configured to permit a flow of the first fuel from the first pressure regulator through the fuel selector valve and to prevent a flow of the second fuel therethrough and can have a second position configured to permit a flow of the second fuel from the second pressure regulator through the fuel selector valve and to prevent a flow of the first fuel therethrough.

The dual fuel heating source can further comprise an outlet valve having a set of inlets and first and second sets of outlets. In a first position of the outlet valve flow can be permitted from the set of inlets through the outlet valve to the first set of outlets and in a second position of the outlet valve flow can be permitted from the set of inlets through the outlet valve to the second set of outlets. In certain embodiments, the fuel selector valve and the outlet valve are coupled together such that selecting the first position on fuel selector valve also selects the first position on the outlet valve and selecting the second position on the fuel selector valve also selects the second position on the outlet valve.

In some embodiments, the set of inlets can comprise an oxygen depletion sensor (ODS) inlet and a burner inlet and each of the first and second sets of outlets comprises an ODS outlet and a burner outlet. The first ODS and burner outlets can be configured to direct fuel to an ODS and a burner nozzle, respectively, configured for use with the first fuel, and the second ODS and burner outlets can be configured to direct fuel to an ODS and a burner nozzle, respectively, configured for use with the second fuel.

In some embodiments, a dual fuel heating source can comprise a first pressure regulator configured to regulate a flow of natural gas, a second pressure regulator configured to regulate a flow of liquid propane and a fuel selector valve. The fuel selector valve can have a first inlet and a second inlet. The fuel selector valve can be configured such that as the valve rotates one inlet is open and the other is closed. The first inlet can be connected to the first pressure regulator and the second inlet can be connected to the second pressure regulator.

The dual fuel heating source can further comprise an outlet valve having a first configuration of flow channels and a second configuration of flow channels. The outlet valve can be axially aligned with the fuel selector valve and configured such that rotation of the fuel selector valve also rotates the outlet valve. Selecting a fuel with the fuel selector valve can determine which inlet is open to allow flow therethrough of either natural gas or liquid propane and can determine the flow path of the fuel through the outlet valve by either the first configuration of flow channels or the second configuration of flow channels. In certain embodiments, the dual fuel heating source can further comprise a control valve, wherein the control valve is connected to the fuel selector valve and controls the amount of fuel flowing from the fuel selector valve to the outlet valve.

In some embodiments, a dual fuel heating source can comprise first and second pressure regulators configured to regulate two different fuels at different pressures, wherein the dual fuel heating source is configured to use one fuel at a time; a fuel selector valve for selecting between the two different fuels; and an outlet valve for controlling the flow of fuel from the dual fuel heating source to a combustion chamber. The dual fuel heating source can be configured such that connecting one fuel to its designated pressure regulator and selecting another with the fuel selector valve prevents fuel from flowing through the dual fuel heating source.

According to some embodiments, a method can comprise moving a fuel selector to determine a gas path through the fuel selector. Moving the fuel selector can result in movement of a controller configured to direct the gas to either an LP burner line and oxygen depletion sensor (ODS) line in one position or an NG burner line and ODS line in another position.

In some embodiments of a method, the fuel selector can be connected to a dual fuel pressure regulator and moving said fuel selector can determine a gas path from said dual fuel pressure regulator through said fuel selector. The dual fuel pressure regulator can include a first outlet and a second outlet, and moving said fuel selector to a first position can permit communication of gas from said first outlet to said controller and moving said selector to a second position can permit communication of gas from said second outlet to said controller. Further, in some methods, moving said fuel selector to a first position can permit communication of gas from said first outlet through said controller to said LP burner line and LP ODS line and moving said selector to a second position can permit communication of gas from said second outlet through said controller to an NG burner line and ODS line.

BRIEF DESCRIPTION OF THE DRAWINGS

Various embodiments are depicted in the accompanying drawings for illustrative purposes, and should in no way be interpreted as limiting the scope of the inventions.

FIG. **1** is a perspective cutaway view of a portion of one embodiment of a heater configured to operate using either a first fuel source or a second fuel source.

FIG. **2** is a perspective cutaway view of the heater of FIG. **1**.

FIG. **3** is perspective view of one embodiment of a heating source.

FIG. **4** is a schematic view of a heating source wherein natural gas is selected.

FIG. **5** is a schematic view of a heating source wherein liquid propane is selected.

FIG. **6** is a schematic view of a heating source having a fuel selector valve and an outlet valve wherein natural gas is selected.

FIG. **6**A is a diagram illustrating certain functions.

FIG. **7** is a side and top perspective view of another embodiment of a heating source.

FIG. **8** is a cross-sectional view from the top of the heating source of FIG. **7**.

FIG. **9** is a cross-sectional view from the side of the heating source of FIG. **7**.

FIG. **10** is a perspective view of another embodiment of a heating source.

FIG. **11** is another embodiment of a heating source.

FIG. **12**A is a perspective view of an air shutter coupled with a fuel delivery line in a first operational configuration.

FIG. **12**B is a perspective view of an air shutter coupled with a fuel delivery line in a second operational configuration.

FIG. **12**C is a partially dissembled view of a gas log insert.

FIG. **12**D is a gas log insert that can be used in a preexisting fireplace.

FIGS. **13**A-B are top and a side cross-sectional views, respectively, of another embodiment of a heating source in a first position.

FIGS. **13**C-D are top and a side cross-sectional views, respectively, of the heating source of FIGS. **13**A-B in a second position.

FIG. **14** shows a perspective view of another embodiment of a heating source.

FIGS. **15**A-C show different positions of a user interface surface.

FIGS. **15**D-E show additional embodiments of a user interface surface.

FIG. **16** illustrates another embodiment of a heating source with the valve housing removed.

FIGS. **17**A-C show different positions of an air shutter.

FIG. **18**A is an embodiment of a heating source and air shutter.

FIG. **18**B is an exploded view of the air shutter of FIG. **18**A.

FIG. **19** is a schematic representation of a dual fuel direct vent heater.

FIG. **20** shows a partial cross-section and disassemble view of a direct vent heater **210**.

FIG. **21** is a detail perspective view of part of a housing of a dual fuel direct vent heater with a heating source.

FIG. **22**A is side view of another embodiment of a heating source.

FIG. **22**B is a cross-sectional view of the heating source of FIG. **22**A in a first position.

FIG. **22**C is a cross-sectional view of the heating source of FIG. **22**A in a second position.

FIG. **23** is a side view of another embodiment of a heating source.

FIG. **23**A is a cross-sectional view is a cross-sectional view of the heating source of FIG. **23** in a first position.

FIG. **23**B is a cross-sectional view of the heating source of FIG. **23** in a second position.

FIG. **24** is a detail view of another embodiment of a nozzle from a heating source.

FIG. **24**A is a detail view of the end of the nozzle in FIG. **24**.

FIG. **25**A is a perspective view of parts of the heater including a heating source and a basket that is part of a sealed combustion chamber.

FIG. **25**B shows a top view of the parts of the heater of FIG. **25**A.

FIGS. **26**A and B are schematic and partial cross-sectional views of another embodiment of a heating source in a first and second configuration, respectively.

FIG. **27** shows another embodiment of a heating source.

FIGS. **27**A and B are schematic and partial cross-sectional views of the heating source of FIG. **27** in a first and second configuration, respectively.

FIG. **28** is a partially dissembled view of the heating source of FIG. **27**.

FIGS. **28**A and B are cross-sectional views of a portion of the heating source of FIG. **28** taken along line A-B and showing a first and second configuration, respectively.

FIG. **29** is a schematic cross-sectional view of the heating source of FIG. **27**.

FIG. **30** illustrates partial cross-section of a portion of the heating source of FIG. **27** including a nozzle.

FIG. **31** shows a perspective view of another embodiment of a heating source.

FIG. **32** shows a perspective view of another embodiment of a heating source.

FIG. **32**A schematically illustrates the positions of an internal shaft of the heating source of FIG. **32**.

FIGS. **33**, **34**, **35** are schematic and partial cross-sectional views of the heating source of FIG. **32** in a closed, first open and second open configuration, respectively.

FIGS. **33**A, **34**A, **35**A are cross-sectional views taken along line A-A of the respective base FIG. **33**, **34** or **35**.

FIGS. **33**B, **34**B, **35**B are cross-sectional views taken along line B-B of the respective base FIG. **33**, **34** or **35**.

FIGS. **33**C, **34**C, **35**C are cross-sectional views taken along line C-C of the respective base FIG. **33**, **34** or **35**.

DETAILED DESCRIPTION OF THE PREFERRED EMBODIMENT

Many varieties of space heaters, fireplaces, stoves, ovens, boilers, fireplace inserts, gas logs, and other heat-producing devices employ combustible fuels, such as liquid propane and natural gas. These devices generally are designed to operate with a single fuel type at a specific pressure. For example, as one having skill in the art would appreciate, some gas heaters that are configured to be installed on a wall or a floor operate with natural gas at a pressure in a range from about 3 inches of water column to about 6 inches of water column, while others operate with liquid propane at a pressure in a range from about 8 inches of water column to about 12 inches of water column.

In many instances, the operability of such devices with only a single fuel source is disadvantageous for distributors, retailers, and/or consumers. For example, retail stores often try to predict the demand for natural gas units versus liquid propane units over a given season, and accordingly stock their shelves and/or warehouses with a percentage of each variety

of device. Should such predictions prove incorrect, stores can be left with unsold units when the demand for one type of unit was less than expected, while some potential customers can be left waiting through shipping delays or even be turned away empty-handed when the demand for one type of unit was greater than expected. Either case can result in financial and other costs to the stores. Additionally, some consumers can be disappointed to discover that the styles or models of stoves, fireplaces or other device, with which they wish to improve their homes, are incompatible with the fuel sources with which their homes are serviced.

Certain advantageous embodiments disclosed herein reduce or eliminate these and other problems associated with devices having heating sources that operate with only a single type of fuel source. Furthermore, although certain of the embodiments described hereafter are presented in the context of vent-free heating systems, the apparatus and devices disclosed and enabled herein can benefit a wide variety of other applications and appliances.

FIG. **1** illustrates one embodiment of a heater **100**. The heater **100** can be a vent-free infrared heater, a vent-free blue flame heater, or some other variety of heater, such as a direct vent heater. Some embodiments include boilers, stoves, dryers, fireplaces, gas logs, etc. Other configurations are also possible for the heater **100**. In many embodiments, the heater **100** is configured to be mounted to a wall or a floor or to otherwise rest, in a substantially static position. In other embodiments, the heater **100** is configured to move within a limited range. In still other embodiments, the heater **100** is portable.

The heater **100** can comprise a housing **200**. The housing **200** can include metal or some other suitable material for providing structure to the heater **100** without melting or otherwise deforming in a heated environment. In the illustrated embodiment, the housing **200** comprises a window **220**, one or more intake vents **240** and one or more outlet vents **260**. Heated air and/or radiant energy can pass through the window **220**. Air can flow into the heater **100** through the one or more intake vents **240** and heated air can flow out of the heater **100** through the outlet vents **260**.

With reference to FIG. **2**, in certain embodiments, the heater **100** includes a regulator **120**. The regulator **120** can be coupled with an output line or intake line, conduit, or pipe **122**. The intake pipe **122** can be coupled with a heater control valve **130**, which, in some embodiments, includes a knob **132**. As illustrated, the heater control valve **130** is coupled to a fuel supply pipe **124** and an oxygen depletion sensor (ODS) pipe **126**, each of which can be coupled with a fluid flow controller **140**. The fluid flow controller **140** can be coupled with a first nozzle line **141**, a second nozzle line **142**, a first ODS line **143**, and a second ODS line **144**. In some embodiments, the first and the second nozzle lines **141**, **142** are coupled with a nozzle **160**, and the first and the second ODS lines **143**, **144** are coupled with an ODS **180**. In some embodiments, the ODS comprises a thermocouple **182**, which can be coupled with the heater control valve **130**, and an igniter line **184**, which can be coupled with an igniter switch **186**. Each of the pipes **122**, **124**, and **126** and the lines **141-144** can define a fluid passageway or flow channel through which a fluid can move or flow.

In some embodiments, including the illustrated embodiment, the heater **100** comprises a burner **190**. The ODS **180** can be mounted to the burner **190**, as shown. The nozzle **160** can be positioned to discharge a fluid, which may be a gas, liquid, or combination thereof into the burner **190**. For purposes of brevity, recitation of the term "gas or liquid" hereafter shall also include the possibility of a combination of a gas and a liquid. In addition, as used herein, the term "fluid" is a broad term used in its ordinary sense, and includes materials or substances capable of fluid flow, such as gases, liquids, and combinations thereof.

Where the heater **100** is a dual fuel heater, either a first or a second fluid is introduced into the heater **100** through the regulator **120**. Still referring to FIG. **2**, the first or the second fluid proceeds from the regulator **120** through the intake pipe **122** to the heater control valve **130**. The heater control valve **130** can permit a portion of the first or the second fluid to flow into the fuel supply pipe **124** and permit another portion of the first or the second fluid to flow into the ODS pipe **126**. From the heater control valve **130**, the first or the second fluid can proceed to the fluid flow controller **140**. In many embodiments, the fluid flow controller **140** is configured to channel the respective portions of the first fluid from the fuel supply pipe **124** to the first nozzle line **141** and from the ODS pipe **126** to the first ODS line **143** when the fluid flow controller **140** is in a first state, and is configured to channel the respective portions of the second fluid from the fuel supply pipe **124** to the second nozzle line **142** and from the ODS pipe **126** to the second ODS line **144** when the fluid flow controller **140** is in a second state.

In certain embodiments, when the fluid flow controller **140** is in the first state, a portion of the first fluid proceeds through the first nozzle line **141**, through the nozzle **160** and is delivered to the burner **190**, and a portion of the first fluid proceeds through the first ODS line **143** to the ODS **180**. Similarly, when the fluid flow controller **140** is in the second state, a portion of the second fluid proceeds through the nozzle **160** and another portion proceeds to the ODS **180**. As discussed in more detail below, other configurations are also possible.

A heating assembly or heating source **10** that can be used with the heater **100**, or other gas appliances, will now be described. The heating source **10** can be configured such that the installer of the gas appliance can connect the assembly to one of two fuels, such as either a supply of natural gas (NG) or a supply of propane (LP) and the assembly will desirably operate in the standard mode (with respect to efficiency and flame size and color) for either gas.

Looking at FIGS. **3-5**, a heating source **10** can comprise a fuel selector valve **3**. The fuel selector valve **3** can be for selecting between two different fuels. The fuel selector valve **3** can have a first mode configured to direct a flow of a first fuel (such as NG) in a first path through the fuel selector valve **3** and a second mode configured to direct a flow of a second fuel (such as LP) in a second path through the fuel selector valve **3**. For example, the fuel selector valve **3** can have a first mode configured to permit a flow of a first fuel (such as NG) through the fuel selector valve **3** and to prevent a flow of a second fuel (such as LP) therethrough and a second mode configured to permit a flow of the second fuel through the fuel selector valve **3** and to prevent a flow of the first fuel therethrough. In some embodiments, including the illustrated embodiment, the first and second modes comprise first and second positions of the fuel selector valve **3**. The fuel selector valve **3** can also be used to perform other functions as will be described later on in this specification.

The heating assembly **10** can further comprise first and second fuel source connections **15**. The heating assembly **10** can connect to one of two different fuel sources, each fuel source having a different type of fuel therein. For example, one fuel source can be a cylinder of LP and another fuel source can be a NG fuel line in a house, connected to a city gas line. In some embodiments, the first and second fuel source connections **15** comprise first and second pressure regulators **13**, **14**. In some embodiments, the first and second pressure

regulators **13**, **14** are separate and in some embodiments, they are connected in a joint regulator unit **12**. In still other embodiments, the pressure regulator can be adjustable so that one fuel source connection can be used for different fuels.

In some embodiments, including the illustrated embodiment, the fuel selector valve **3** can have a first position configured for permitting a flow of the first fuel from the first pressure regulator **13** through the fuel selector valve **3** and preventing a flow of the second fuel therethrough; and a second position configured for permitting a flow of the second fuel from the second pressure regulator **14** through the fuel selector valve **3** and preventing a flow of the first fuel therethrough.

The pressure regulators **13**, **14** can function in a similar manner to those discussed in U.S. application Ser. No. 11/443,484, filed May 30, 2006, now U.S. Pat. No. 7,607,426, incorporated herein by reference and made a part of this specification; with particular reference to the discussion on pressure regulators at columns **3-9** and FIGS. **3-7** of the issued patent. The regulator unit **12** can incorporate the two separate pressure regulators **13**, **14** into one unit, maintaining separate inlets and outlets for each pressure regulator **13**, **14** through the unit **12**, resulting in a two in-two out configuration.

The pressure regulators **13**, **14** can be preset at the manufacturing site, factory, or retailer to operate with selected fuel sources. In many embodiments, the regulator unit **12** includes one or more caps to prevent consumers from altering the pressure settings selected by the manufacturer. Optionally, the heater **100** and/or the regulator unit **12** can be configured to allow an installation technician and/or user or customer to adjust the heater **100** and/or the regulator unit **12** to selectively regulate the heater unit for a particular fuel source.

In some embodiments, the pressure regulators **13**, **14** are selectively and independently operable which are independently operated depending on the fuel source, such as, but not limited to, natural gas and propane. In some embodiments, the first pressure regulator **13** comprises a first spring-loaded valve or valve assembly and the second pressure regulator **14** comprises a second spring-loaded valve or valve assembly.

The pressure settings can be set by tensioning of a screw that allows for flow control of the fuel at a predetermined pressure or pressure range and selectively maintains an orifice open so that the fuel can flow through spring-loaded valve or valve assembly of the pressure regulator. If the pressure exceeds a threshold pressure, a plunger seat can be pushed towards a seal ring to seal off the orifice, thereby closing the pressure regulator.

The pressure selected depends at least in part on the particular fuel used, and may desirably provide for safe and efficient fuel combustion and reduce, mitigate, or minimize undesirable emissions and pollution. In some embodiments, the first pressure regulator **13** can be set to provide a pressure in the range from about 3 inches of water column to about 6 inches of water column, including all values and sub-ranges therebetween. In some embodiments, the threshold or flow-terminating pressure is about 3 inches of water column, about 4 inches of water column, about 5 inches of water column, or about 6 inches of water column.

In some embodiments, the second pressure regulator **14** can be configured to provide a second pressure in the range from about 8 inches of water column to about 12 inches of water column, including all values and sub-ranges therebetween. In some embodiments, the second threshold or flow-terminating pressure is about equal to 8 inches of water column, about 9 inches of water column, about 10 inches of water column, about 11 inches of water column, or about 12 inches of water column.

When natural gas is the first fuel and propane is the second fuel, the first pressure, pressure range and threshold pressure are less than the second pressure, pressure range and threshold pressure. Stated differently, in some embodiments, when natural gas is the first fuel and propane is the second fuel, the second pressure, pressure range and threshold pressure are greater than the first pressure, pressure range and threshold pressure.

Advantageously, the regulator unit **12**, by comprising first and second pressure regulators **13**, **14** which are selectively and independently operable, facilitates a single heater unit being efficaciously used with different fuel sources. This desirably saves on inventory costs, offers a retailer or store to stock and provide a single unit that is usable with more than one fuel source, and permits customers the convenience of readily obtaining a unit which operates with the fuel source of their choice. The particular fuel pressure operating range is desirably factory-preset to provide an adaptable and versatile heater.

The regulator unit **12**, like the other parts of the heating assembly **10**, can comprise a wide variety of suitably durable materials. These include, but are not limited to, metals, alloys, ceramics, plastics, among others. In one embodiment, the regulator unit **12** comprises a metal or alloy such as aluminum or stainless steel. Various suitable surface treatments and finishes may be applied with efficacy, as needed or desired.

In certain embodiments, the regulator unit **12**, like the other parts of the heating assembly **10**, can be fabricated or created using a wide variety of manufacturing methods, techniques and procedures. These include, but are not limited to, casting, molding, machining, laser processing, milling, stamping, laminating, bonding, welding, and adhesively fixing, among others.

The heating source **10** can have: 1) two pressure regulators **13**, **14**, each configured to connect to a different fuel (such as NG on one and LP on the other) and 2) a fuel selector valve **3**, with no pipes in-between 1 and 2, as shown in FIG. **3**. The fuel selector valve **3** can permit the flow of fuel from one of the two pressure regulators, through the fuel selector valve **3** and into additional components **9**. The additional components **9** can be, for example, the heater control valve **130**, the fluid flow controller **140**, the nozzle **160**, etc. In some embodiments, the additional components **9** can comprise a control valve which comprises at least one of a manual valve, a thermostat valve, an AC solenoid, a DC solenoid and a flame adjustment motor. In various embodiments, the additional components **9** may or may not comprise part of the heating source **10**. The additional components **9** can be configured to use the fuel, such as for combustion, and/or to direct one or more lines of fuel to other uses or areas of the heater **100** or other appliance.

FIGS. **4** and **5** show schematic diagrams of a heating source **10** wherein different fuels, NG or LP are selected. A rotating valve is represented where in a first position a passageway **31** allows the first gas, shown as NG in FIG. **4**, to pass through the selector valve **3** and in a second position a passageway **33** allows the second gas, shown as LP in FIG. **5**, to pass through the selector valve **3**. Also shown are two inlets **35** and one outlet **37**. The reverse could also be true in that the selector valve can have one inlet and two outlets. In some embodiments, there are two inlets **35** and two outlets **37**, wherein each inlet **35** corresponds to a particular outlet **37**. In some embodiments, the entire passageway **31**, **33** rotates between an open and a closed position wherein the passageway is either connected or disconnected to an inlet **35** and an outlet

37. In other embodiments, a segment of the passageway **31**, **33** or a door on the inlet **35** or outlet **37** moves to open or close the passageway **31**, **33**, inlet **35** or outlet **37**.

The fuel selector valve **3** provides many benefits. For example, the fuel selector valve **3** can allow the heating source **10** to be configured such that connecting one fuel to its designated pressure regulator and selecting another with the fuel selector valve **3** prevents fuel from flowing through the dual fuel heating source **10**. In many prior art designs, connecting one fuel and selecting another would potentially allow the fuel to flow, albeit at a configuration designed for another fuel. This could result in a dangerous condition, for example, an elevated flame.

In some embodiments the fuel selector valve can have additional positions. For example, the fuel selector valve can select between two different fuels and between a higher and a lower BTU level. This may be necessary where the heater or other appliance has a low BTU level and a high BTU level. A different amount of fuel may be required in one level than the other which may require a larger opening for flow through the valve. For example, a 40,000 BTU level and a 20,000 BTU can require substantially different amounts of fuel and the fuel selector valve can have different positions that can correspond to different sized openings or channels through the valve.

Turning now to FIG. **6**, another embodiment of a heating source **10** will be described. The heating source **10** can comprise an outlet valve **5**. The outlet valve **5** can have a first inlet **41** and a second inlet **42**. According to some embodiments, the outlet valve **5** further has first and second sets of outlets, wherein each inlet **41** is configured to establish fluid communication with one of either of two outlets **43**, **45** and inlet **42** is configured to establish fluid communication with one of either of two outlets **44**, **46**. As can be seen in FIG. **6**, inlet **41** is in fluid communication with outlet **43** but, if the outlet valve **5** were to be rotated, fluid communication would be disconnected between inlet **41** and outlet **43** and would be established between inlet **41** and outlet **45**. It can also be seen that the selection of inlet **41** with outlet **43** is also tied to the selection of inlet **42** and outlet **44**, as is the selection of inlet **41** with outlet **45** tied to the selection of inlet **42** and outlet **46**.

In this way, the heating source **10** can output a fluid flow to a particular part of the heater **100** (or other gas appliance). For example, the outlet valve **5** could select between directing fuel towards a first burner nozzle configured for a first fuel or a second burner nozzle configured for a second fuel. The burner nozzles could be different sizes depending on the particular fuel and therefore not particularly well suited for the other fuel. Similarly, the outlet valve **5** could select between directing fuel towards a first pilot light or a first oxygen depletion sensor configured for a first fuel or a second pilot light or a second oxygen depletion sensor configured for a second fuel. Alternatively, the outlet valve **5** could direct fuel to particular flow paths configured for the particular fuel.

In some embodiments, the outlet valve **5** and the fuel selector valve **3** can be connected or coupled such that making a selection with the fuel selector valve **3** also makes a selection with the outlet valve **5**. The heating source **10** can comprise a connecting rod **17**. The connecting rod **17** can connect the outlet valve **5** and the fuel selector valve **3**. In this way, first and second positions of the fuel selector valve **3** can correspond with first and second positions of the outlet valve **5**, respectively. Additional positions can also correspond. For example, the fuel selector valve **3** and the outlet valve **5** could both have a closed position. As another example, in the illustrated embodiment in FIG. **6**, natural gas has been selected with the fuel selector valve **3** and fuel passageway **31** is open, in addition, on the outlet valve **5**, outlet **43** is open to inlet **41** and outlet **44** is open to inlet **42**. If liquid propane were selected instead, passageway **33** would be open and outlet **45** would be open to inlet **41** and outlet **46** would be open to inlet **42**.

FIG. **6**A illustrates the functions of the schematic from FIG. **6** without regard to any specific structure. It should be noted that the controls shown as S**1** and S**2** can be connected with a rod **17** as illustrated in FIG. **6** but can also be connected in other ways such as by gears, a flapper valve, etc., or as otherwise described herein. The functions can also be tied together or controlled without being physically connected, such as through a central control system, electrical controls, hydraulic controls, etc.

FIGS. **7**-**9** show a particular embodiment of a heating source **10** with a fuel selector valve **3**, an outlet valve **5** and a connecting rod **17**. The heating source **10** has a valve housing **20** in which the valve bodies rotate. In some embodiments the heating source **10** has separate valve housings **20** for each of the fuel selector valve **3** and the outlet valve **5**. Whether having combined or separate valve housings, the valves **3**, **5** can be sealed so that the fluid within each valve **3**, **5** does not communicate directly with the fluid in the other valve, **3**, **5** within the valve housings **20**. The valve bodies can each have a frustoconical shape. The point can be directed inward. This shape can help the valves to properly seat within the valve housing **20** and help the fluid passageways to properly line up.

As shown, the fuel selector valve **3** has two channels **31**, **33** which are offset at an approximately 90 degree angle. By rotating the fuel selector valve **3**, one channel is aligned with an inlet **35** and an outlet **37** while the other channel is not. As best seen in FIG. **8**, in the position shown, channel **33** is open and channel **31** is closed. Various other configurations to achieve the same purpose are also contemplated. The channels **31**, **33** can also be different sizes. This can allow more or less flow through the fuel selector valve **3** depending on the type of fuel selected. For example, each channel **31**, **33** can be oval or oblong or can comprise multiple channels. This can allow a greater amount of flow through the valve then might otherwise be possible. For example, a system configured for 40,000 BTU or greater may use an oblong channel in the valve where a 20,000 BTU system may only need a round channel in the same sized valve.

Also in the embodiment shown, the outlet valve **5** has two channels **51**, **53**. These channels **51**, **53** are elbow shaped so that there are two sections which combine to form a right angle. Further, the inlets **41**, **42** are on a side of the outlet valve **5** and the outlets are on the top and the bottom so that the inlets can only connect with one of the respective outlets, either with those on the top or those on the bottom. Thus, the outlet valve **5** can change the configuration with a 90 degree rotation. Looking at FIG. **9**, it can be seen that outlets **45** and **46** are open and outlets **43** and **44** are closed.

The outlet valve **5** can have a first configuration of flow channels and a second configuration of flow channels. The outlet valve **5** can be axially aligned with the fuel selector valve **3** and configured such that rotation of the fuel selector **3** valve also rotates the outlet valve **5**. Selecting a fuel with the fuel selector valve **3** can determine which inlet of the fuel selector valve is open to allow flow therethrough of either natural gas or liquid propane and can determine the flow path of the fuel through the outlet valve **5** by either the first configuration of flow channels or the second configuration of flow channels.

The heating source **10** can have end caps **22**, **24** and a shaft **26** (FIG. **7**). The shaft **26** can be used to rotate the valves **3**, **5** and connecting rod **17** to make the desired selection. The shaft

26 can pass through the end cap 22. In certain embodiments, other devices or valves can be further connected to the heating source 10 such that making a selection with the heating source 10 also performs additional actions. One particular device, described in more detail below, can comprise an air shutter control.

The outlet valve 5 can also have additional channels 55 which connect to the outlets or are part of the outlets 43, 44, 45, 46. The additional channels 55 can, for example, provide additional exit points to direct the flow of fuel from the outlet valve 5. In some embodiments, the outlet valve 5 can comprise one or more caps 58. The caps 58 can close off the unused exits such as those from the additional channels 55 or the outlets. The additional channels 55 and the caps 58 can increase the versatility of the outlet valve 5.

In some embodiments the fuel selector valve can have additional positions. For example, the fuel selector valve can select between two different fuels and between a higher and a lower BTU level. This may be necessary where the heater or other appliance has a low BTU level and a high BTU level. A different amount of fuel may be required in one level than the other which may require a larger opening a flow through the valve. For example, a 40,000 BTU level and a 20,000 BTU can require substantially different amounts of fuel and the fuel selector valve can have different positions that can correspond to different sized openings or channels through the valve.

FIG. 10 illustrates a heater 101 with another embodiment of a heating source 10, having a fuel selector valve 3, an outlet valve 5 and a connecting rod 17. The heater 101 can be portable. The heater 101 is shown in partial cross-section and partially disassembled to better shown certain features of the heating source 10. As shown, the heating source 10 comprises a regulator unit 12 having first and second pressure regulators 13, 14, a fuel selector valve 3 and an outlet valve 5. The heating source 10 according to certain embodiments can comprise a manifold 57. The manifold 57 can combine the two outlets 37 of the fuel selector valve 3 into one channel and can maintain two separate flow paths for the two inlets 41, 42 of the outlet valve 5. The manifold 57 also comprises other configurations.

Also shown in FIG. 10 are channels 21, 23 and 25 and control valve 59. The control valve 59 can comprise at least one of a manual valve, a thermostat valve, an AC solenoid, and a DC solenoid. The control valve 59 can control the amount of fuel flowing from the fuel selector valve to the outlet valve. For example, the control valve 59 can receive an amount of fuel from the fuel selector valve 3 through channel 21. The control valve 59 can divide the flow into two flows or branches. The two flows or branches can be for different purposes, such as for an oxygen depletion sensor (ODS) 180 and for a burner 190. In some embodiments, the control valve 59 can output an amount of fuel for the ODS 180 through the channel 23 and an amount of fuel for the burner 190 through channel 25. The control valve 59 can manually or automatically control when and how much fuel is flowing. In some embodiments, the control valve 59 can directly connect to the fuel selector valve 3 and the outlet valve 5. In some embodiments, the control valve 59 is directly connected to a manifold 57 that is directly connected to the fuel selector valve 3 and the outlet valve 5. In some embodiments, the control valve 59 comprises both a manual control valve and an automatic control valve.

The heater assembly 10 may produce different color flames. Some embodiments have a blue flame, which is generally indicative of high efficiency gas combustion. For example, the heating assembly of FIG. 10 can be used to produce a blue flame in a vent free heater. Other embodiments have a yellow flame, particularly where air is introduced into the fuel. A yellow flame can appear closer to what many people are familiar with when it comes to fire and therefore may be more desirable for some people. In some embodiments, yellow flame is not as efficient as blue flame because less fuel is combusted. Heaters, such as direct vent heaters, vent free heaters, and builder vent heaters are examples of heating sources that might typically have yellow flames. Some embodiments with a yellow flame can have an air shutter.

An air shutter can be used to introduce air into the flow of fuel prior to combustion. The amount of air that is needed to be introduced depends on the type of fuel used. For example, propane gas needs more air than natural gas to produce a flame of the same size.

Looking now to FIG. 11, an additional embodiment of a heating source 10 is shown having an air shutter adjustment 60. The air shutter adjustment 60 can adjust the air shutter depending on the type of gas used. The air shutter adjustment 60, in some embodiments can comprise a rocker arm 62 and a rod 64. Some embodiments can comprise more than one rod 64. In certain embodiments, the end cap 24 (shown in FIGS. 7-9) can be removed and replaced with a device having an air shutter adjustment 60 (FIG. 11). The air shutter adjustment 60 can be connected to one or both of the fuel selector valve 3 and the outlet valve 5. Thus, selecting a position with the fuel selector valve 3 can, for example, also select a position of the air shutter adjustment 60.

In some embodiments, additional channels 55 can be attached to the heating source 10. For example, the outlets 46 and 44 can be closed with caps 58 so that the flow can be directed down the additional channels 55. As shown, the additional channels 55 can end in a nozzle or nozzle holding unit 56. The nozzle holding unit can hold a nozzle and the additional channels 55 can direct flow to different parts of the nozzle depending on the type of fuel to be used. For example, the nozzle can have a first flow path configured for a first fuel and a second flow path configured for a second fuel. The different paths can comprise different sized orifices, each configured for a particular fuel.

With reference now to FIG. 12A, the heating source of FIG. 11 is shown attached to an air shutter 70. A nozzle can deliver fuel to a mixing compartment 66 within the air shutter 70. In a first position, as shown in FIG. 12A, the air flow channels or windows 65 are relatively small and allow a relatively small amount and/or a relatively low flow rate of air therethrough. In some embodiments, as fuel is dispensed from the nozzle, air is drawn through the windows 65. In some embodiments, the size of the windows 65 is such that the amount of air drawn into the mixing compartment 66 is adequate to form an air-fuel mixture that combusts as a substantially yellow flame (e.g., a flame of which a substantial portion is yellow) at the burner. In some embodiments, the heating assembly 10 is configured to dispense natural gas at a first pressure so as to produce a substantially yellow flame at the burner.

With reference to FIG. 12B, air shutter 70 can be configured to transition to a second operational configuration. In certain embodiments, the rocker arm 62 can be rotated, thereby imparting rotational movement to the cover 63. Rotational movement of the cover 63 can enlarge or decrease the amount of the openings on the conduit 67 exposed to the air, thereby adjusting the size of the windows 65. For example, prior to rotation of the cover 63, the windows 65 can define a first flow area, and subsequent to rotation of the cover 63, the windows 65 can define a second flow area which varies from the first flow area. For example, the rocker arm 62 can be

connected to at least one rod **64**. The rod **64** can connect to an extension or flange **69** on the cover **63** through a hole or slot **68**. Movement of the rocker arm **62** can thereby move the cover **63** through the rod **64**.

In some embodiments, when the heating assembly **10** is in the second operating configuration, the windows **65** are relatively larger than they are when the heating assembly **10** is in the first configuration. In some embodiments, the size of the windows **65** changes by a predetermined amount between the first and second configurations.

In some embodiments, the size of the windows **65** is such that, when the heating assembly **10** is in the second configuration, the amount of air drawn into the mixing compartment **66** is adequate to form an air-fuel mixture that combusts as a substantially yellow flame at the burner. In some embodiments, the heating assembly **10** is configured to dispense propane at a second pressure so as to produce a substantially yellow flame at the burner. In some embodiments, the second pressure at which propane is dispensed is larger than the first pressure at which natural gas is dispensed when the valve assembly is in the first configuration.

The heating assembly **10** can transition from the second operational configuration to the first operational configuration. In certain embodiments, the cover **63** occludes a larger portion of the openings defined by the conduit **67** when the heating assembly **10** transitions from the second operational configuration to the first operational configuration, thus reducing the size of the windows **65**. Advantageously, the heating assembly **10** can transition between the first and second operating configurations as desired with relative ease. Accordingly, a user can select whichever configuration is appropriate for the fuel source with which the heating assembly **10**, and more generally, the heater **10** (or other gas appliance), is to be used.

As discussed previously, the air shutter **70** and the air shutter adjustment **60** can be coupled to the fuel selector valve **3** and/or the outlet valve **5**. In this situation, by making a fuel selection with the fuel selector valve **3**, not only are the flow paths through the fuel selector valve **3** and outlet valve **5** decided but also, the position of the air shutter **70** and the size of the window **65** is also decided. This combined control mechanism advantageously allows a user, such as an installer, to easily and simply switch between one setting for a first fuel and another setting for a second fuel. This alleviates many of the different adjustments and changes required to change from one fuel to another in many prior art heating sources. In some uses, such as blue flame, there is no air shutter and so this is true of the heating source **10** even when it does not have an air shutter or an air shutter adjustment.

In some embodiments, selecting a fuel with the fuel selector valve **3** is the only change required to be performed by an installer to change the heating source **10** from being configured for one fuel to another. For example, a heating source **10** can be used in a dual fuel heater designed for use with either natural gas or liquid propane. The heater can be factory set in an initial configuration for natural gas. After purchase, if the installer needs to connect the heater to a liquid propane source, the source can be connected to the appropriate pressure regulator. Then, the installer can rotate the fuel selector valve to an identified liquid propane position. This opens the appropriate channel in the fuel selector so that the liquid propane can pass through the valve to a control valve. This also opens the appropriate channels in the outlet valve so that the fuel will be directed to the burner and ODS though the appropriate channels configured for liquid propane. This selection also adjusts the air shutter so that the windows are moved to a configuration designed for liquid propane.

Additionally, if the installer does not change the fuel selector valve to the correct position for liquid propane, the heater will not function as the liquid propane will be prevented from passing through the fuel selector valve into the heating source configured for natural gas. This provides an additional level of safety.

In many of the currently available systems, the steps identified above were performed individually or not at all. For example, in some systems instead of making a small adjustment the installer is required to replace the burner nozzle and the ODS, which requires a large time commitment and additional parts. In other systems, the installer is required to make multiple small or large adjustments to change the system from one configuration to another. This can include manually changing the air shutter from one position to other, adjusting multiple valves, etc.

Another advantage of the disclosed systems is the ability to quickly move between positions configured for the particular fuels. For example, the air shutter with one move is adjusted from a position configured for natural gas to a position configured for liquid propane. This is in contrast to the currently available systems that use, for example a long screw to adjust the air shutter. These systems may be factory set to one position configured for a first fuel but do not provide the user with an easy or quick way to change to another position configured for another fuel. Also, once this type of air shutter has been adjusted the position may be lost and not easily returned to.

FIGS. **12**C-D illustrate an embodiment of a heater **102** that can utilize the heating assembly **10** and air shutter **70** of FIGS. **11**-**12**B. The heater **102** can be a gas log insert configured for use in a preexisting fireplace, for example. As shown, the heating source **10** can be connected to both an automatic valve and a manual valve to control the fuel flow to the burner **190** and the ODS **180**. The position of the fuel selector valve **3** can also be used to determine the flow through the fuel selector valve **3**, and to control the flow path through the outlet valve **5**, as well as the position of the air shutter **70** and the size of the windows **65** on the air shutter as described above. The gas log insert can have a grill, rack, or grate **28** and a base **30**. The base **30** and grate **28** can provide surfaces against which artificial logs may rest to resemble wood-burning fireplaces.

FIGS. **13**A-D disclose another embodiment of a heater assembly **10**. The heater assembly **10** is shown in cross section to illustrate two different flow paths through the heater assembly **10**. FIGS. **13**A and B illustrate a first configuration wherein channels **33**, **45** and **46** are open and **31**, **43** and **44** are closed. FIGS. **13**C and D show a second configuration wherein channels **31**, **43** and **44** are open and **33**, **45** and **46** are closed. FIGS. **13**A-D also show one possible configuration of the additional channels **55** leading to the nozzle holding unit **56**.

In FIG. **14**, another embodiment of a heating source **10** is shown. The heating source **10** is illustrated with a regulator unit **12**, a fuel selector valve **3**, an outlet valve **5**, and a control valve **59**. The control valve **59** comprises both an automatic and a manual control valve. In some embodiments, the automatic valve is connected directly to the fuel selector valve **3** and the outlet valve **5** and the manual valve is connected directly to the automatic valve.

Certain embodiments of the heating source **10** can also have a user interface surface **72**, such as that shown in FIGS. **15**A-E. The user interface surface can comprise a knob connected to the shaft **26**. The user interface surface **72**, of some embodiments, can control the type of gas. The user interface surface **72**, of some embodiments, can control the amount of air flow. The user interface surface **72**, of some embodiments,

can control the amount of air flow and the type of gas. Manipulation of the user interface surface **72** can control the fuel selector valve **3**, the outlet valve **5** and/or the air shutter **70**. In other embodiments, not shown, the user interface surface **72** can comprise other types of mechanical controls such as a lever, a wheel, a switch, or some other device to transfer a user's movement to move the desired valves. In other embodiments, also not shown, the user interface surface **72** can comprise an electrical or computer control, including but not limited to electrical buttons, electrical switches, a touch screen, etc.

The user interface surface **72** can be rotated from a first position to a second position. The first position can control the heating source **10** so that the heating source is configured for a first fuel. The second position can control the heating source **10** so that the heating source is configured for a second fuel. The user interface surface **72** can also control the heater **100** or other gas appliance. Thus, the first position can control the heater **100** so that the heater **100** is configured for a first fuel and the second position can control the heater **100** so that the heater **100** is configured for a second fuel.

In some embodiments the user interface surface **72** can be limited to two positions, a first position for a first fuel and a second position for a second fuel. Other embodiments can have additional positions or configurations, for example, an off position.

FIGS. **15**A-C show one embodiment of a user interface surface **72**. According to some embodiments, the user interface surface **72** can make two types of adjustments. In an initial adjustment, a user, such as an installer, can select the type of fuel. As shown, the user can select between natural gas and liquid propane. This can be done by rotating the user interface surface **72** so that the indicator **74** is pointing to one of the fuel regions **76**, **78**. If the indicator **74** is anywhere along either fuel region **76** or **78**, that particular fuel is selected. In FIG. **15**A, natural gas (NG) has been selected. In FIGS. **15**B and C, liquid propane (LP) has been selected.

Depending on the configuration of the heating source **10**, the fuel selected by the user interface surface **72** will open or configure the connected valves, if any, to the appropriate setting. Preferably this includes the fuel selector valve **3** and the outlet valve **5**. The air shutter **70** can also be moved to a position configured for the selected fuel.

The second adjustment of user interface surface **72**, in some embodiments, pertains to the air shutter **70**. As discussed previously, the air shutter **70** can be connected to the fuel selector valve **3** and/or the outlet valve **5** with an air shutter adjustment **60**. Movement of the valves can move the air shutter adjustment **60** which in turn moves the air shutter **70**. The second adjustment of the user interface surface **72** can be used for fine tune adjustment of the air shutter **70**. This fine tune adjustment can be done without changing or modifying the flow of the selected fuel.

As mentioned previously, the fuel selection can be done by moving the user interface surface **72** so that the indicator **74** is along a fuel region **76**, **78**. The large arrow in the fuel region can represent a factory setting or a typical setting of the air shutter **70**, known to work in many typical situations. The other markings in the fuel region **76**, **78** can indicate an amount of deviation or change from the first position. In other words, these markings can indicate to a user an increase or decrease in the size of the windows **65** on the air shutter **70** and thereby an increase or decrease in the amount of air that can mix with the fuel flow.

FIGS. **15**D-E illustrate two additional embodiments of user interface surfaces **72**. In FIG. **15**D, the circles indicate an initial position to be lined up with the indicator **74** configured for a particular fuel. From the initial position, the user can continue to rotate the user interface surface **72**. Because the initial position is near the beginning of the fuel region **76**, **78** the adjustment of the air shutter **70** can be to either increase or decrease the size of the window **65** from the initial position. FIG. **15**E is similar to FIG. **15**D with an initial position indicated at zero and showing a degree change from the initial position. For example, as shown, the natural gas (NG) initial position can be a fully open window or largest window position and the degree change can indicate an amount the air shutter is closed from the fully open or largest window position.

In some embodiments, the fuel regions **76**, **78** can be within a 30 degree, 45 degree, 50 degree or 60 degree segment of the user interface surface **72**. In some embodiments, a large change in the position of the user interface surface **72** can result in a small adjustment of the air shutter **70**. In some embodiments, the change in position of the user interface surface **72** corresponds to a similar sized change in the position of the air shutter **70**.

The valves and/or valve housings can be configured to account for a range of positions of the valves **3**, **5** for a particular fuel. This can allow for adjustment of the air shutter without adjusting the flow of fuel through either or both of the valve **3**, **5**. FIG. **16** shows part of the heating source **10** from FIG. **14**, with valve housing **20** removed. In this view it can be seen that the size of the openings to the passageways **31**, **33**, **51**, **53** through the valves **3**, **5** have been increased. It can be seen that the openings on both ends are larger than the rest of the passageway. This can allow the air shutter to be adjusted within a range for a particular fuel. In some embodiments, larger passageways can be used instead of enlarged openings. The enlarged openings, or alternatively the enlarged passageways, can be larger than the inlets and outlets on the valves. The inlets and outlets can include inlets **35**, **41**, **42** and outlets **37**, **43**, **44**, **45**, **46**. This can allow the valve **3** and/or **5** to function properly within a range of positions.

The air shutter **70** and the air shutter adjustment **60** can take on many forms. In one embodiment, the air shutter adjustment **60** is coupled to the outlet valve **5** with a screw. In some embodiments, the outlet valve **5** further comprises a projection **80** which extends through the end cap **24**. The projection **80** can comprise part of the air shutter adjustment **60**. The air shutter **70** can attach to the outlet valve **5** through the projection **80**. In some embodiments, the air shutter **70** is coupled, fastened or otherwise connected to the projection **80**.

Now referring to FIGS. **17**A-C, some embodiments of an air shutter **70** comprise two cylinders. The mixing compartment **66** for mixing air with fuel can be inside the air shutter **70**. The conduit **67**, here the internal cylinder, can be stationary and the cover **63**, here the external cylinder, can move to change the size of the windows **65**. The shown configuration is similar to that shown in FIGS. **12**A and B. The windows **65** are formed when the openings **84** or **86** line up with the openings **82**. In FIGS. **12**A-B the same openings are used for both fuels. In FIGS. **17**A-C different openings are used for the different fuels. This configuration can allow for more specific control over the air shutter **70** and the amount of air that can flow through the windows **65** depending on the fuel. FIG. **17**A illustrates the closed position and **17**B and C show a position for liquid propane and natural gas, respectively.

For example, in some embodiments, the opening used for one fuel is larger than the opening used for the other. The various embodiments and configurations can also have different numbers and/or sizes of openings. For example, one fuel might use three openings where the other might use two. These openings could be the same openings or different open-

ings. In some embodiments, the openings are rectangular for one fuel and triangular for the other. In some embodiments, one opening is equal to or greater than double the size of the other opening.

Different sized openings can be advantageous especially where different fuels require different amounts of air to produce the same sized flame. One fuel may require a small amount of air compared with another fuel. For this reason it can be beneficial to use different sized openings. The openings for the first fuel can be smaller and open up to a lesser extent or more gradually as compared to the openings for the other fuel that requires more air.

In some embodiments the cover **63** can attach to the projection **80** (FIG. **16**). This can allow for control of the air shutter **70** by rotation of the valves such as by movement of the user interface surface **72** as previously described.

FIGS. **18**A and B illustrate another embodiment of an air shutter **70** with two rotating cylinders. The air shutter **70** can form two windows **65** on opposite sides of the air shutter **70** for each fuel selected. The conduit **67** has two sets of different sized triangular holes **84**, **86** and the cover **63** has two rectangular holes **82**. The two rectangular holes **82** on the cover **63** can be positioned to allow air flow through either of the first or second sets of triangular holes **84**, **86**. Further adjustment can then be made to decrease or increase the size of the windows **65**, or the amount of the holes that overlap and allow air flow therethrough.

Aspects of certain embodiments with use in a dual fuel direct vent heater **210** will now be described with respect to FIG. **19**. A direct vent heater **210** can have an air intake **211** which passes through an outside wall **213** of a building. The air intake **211** directs air into a sealed chamber **90** of the direct vent heater **210**. The air can be mixed with a fuel through the air shutter **70** to then be combusted at a burner **92**. The direct vent heater **210** can have a log insert **217** to give the appearance of a natural wood burning fire. The exhaust gas can then exit the sealed chamber through an exhaust **212**.

As shown, the sealed chamber **90** is sealed to the outside with the exception of the air intake **211** and the exhaust **212**. Heated air does not flow from the sealed chamber to the surroundings; instead air, for example from in an interior room, can enter an inlet vent **214**. The air can pass through channel **215** passing over the outside of the sealed chamber **90** and over the exhaust **212**. Heat is transferred to this air which can then pass into the interior room through outlet vent **216**.

As similarly discussed earlier with respect to the dual fuel heater **100**, a dual fuel direct vent heater **210** is made up of various components. Many of the components are similar to those discussed in this regard or as discussed in other parts herein. One difference between the heater **100** and the direct vent heater **210** is in the use of a sealed combustion chamber **90**. The heater **100** has a burner **190** and combustion occurs within the housing **200**. A direct vent heater **210** has a burner **92** and a housing **218**, but inside of the housing **218** is a sealed combustion chamber **90**. The burner **92** is within the sealed combustion chamber **90**, as is the oxygen depletion sensor (ODS) **180**, so that the combustion occurs within the sealed combustion chamber **90**.

Because the combustion chamber **90** is sealed it can be difficult to access components within the chamber **90**. For this reason some components are within the chamber **90** but many are not. In some embodiments, the components necessary for combustion are within the chamber **90** and others are outside.

The schematic diagram in FIG. **19** shows some of the components used for combustion within the sealed combustion chamber **90**, such as, the burner **92**, the air shutter **70** and the ODS **180**. Other components not shown that may also be inside can include: a nozzle, and a thermostat or other temperature sensor. Also shown is a heating source **10** and other components **9** connected to the heating source **10**.

FIG. **20** is an embodiment of a direct vent heater **210**. It can be seen a basket **201** can form part of the sealed chamber **90**. The basket **201** can facilitate placement of some of the component parts of the heater **210** within the sealed chamber **90**, while others remain outside.

FIG. **21** shows an embodiment of a heating source **10** within the housing **218**. As can be seen, pipes connected to the outlets **45** and **46** pass into the sealed combustion chamber **90** through fittings **94** attached to and sealing the holes or entry points in the wall **219** of the sealed combustion chamber **90**. The flow of fuel through outlet **46** can be directed to the burner and the flow of fuel through outlet **45** can be directed to the ODS. Outlets **44** and **43**, not shown, can also direct flow to the burner and ODS respectively in a similar manner as has been described previously.

Part of the heating source **10** can also pass into the sealed combustion chamber **90** through a fitting **94**. For example, the projection **80** (FIG. **16**) can pass into the sealed combustion chamber **90** to provide control of the air shutter **70** with the user interface surface **72**. The fitting **94** can be a separate fitting that allows the valve or pipe to pass into the sealed combustion chamber **90** in a sealed fashion. In some embodiments the end cap **24** can comprise the fitting **94** (for example, FIGS. **7-9**, **16**). For example, the end cap **24** can be inside the sealed combustion chamber **90** and the valve housing **20** can outside. The two parts can then be connected in a sealed fashion around a wall **219** of the combustion chamber **90**. This can both seal the valve housing **20** and seal the hole through to the combustion chamber **90**.

In some embodiments one or more of the fuel lines and the air shutter control can pass into the sealed combustion chamber **90** through the same fitting **94**. For example, the heating source **10** shown in FIG. **11** can be connected to a wall of the combustion chamber **90** such that the fuel selector valve **3** and the outlet valve **5** are outside and the air shutter adjustment **60** and the nozzle holding unit **56** are inside the sealed combustion chamber **90**. The additional channels **55** directing fuel to the burner and the screw which connects the air shutter adjustment to the outlet valve **5** can use the same fitting **94** to enter the sealed combustion chamber **90**.

These configurations can advantageously decrease the number of fittings **94** required and the number of entry points into the sealed combustion chamber **90** that require fittings **94**.

FIG. **22**A shows another embodiment of a heating source **10** which provides further benefits. For example, the number and size of the fittings **94** are decreased. In the valve shown, a nozzle **96** has advantageously been combined with the outlet valve **5**. The nozzle **96** simplifies the construction of the heater **100**, direct vent heater **210** or other gas appliance. This is because the outlets **44** and **46** are eliminated. The outlets **44** and **46** in some embodiments, were connected to a separate nozzle, with each outlet **44**, **46** connected to a channel configured to direct the fuel to an area of the nozzle configured for the particular fuel designed to flow through that outlet and channel.

The two different positions of the outlet valve **5** now can also define two different channels **531**, **532** that each connect to the nozzle **96** in a different way (FIGS. **22**B-C). Channel **531** can be configured for a first fuel and direct the first fuel from the inlet **42** into the nozzle **96**. The nozzle **96** can then direct the first fuel through a first orifice **97**. The first orifice

can be configured for natural gas. The nozzle can also have a second orifice **98**. The second orifice **98** can be configured for liquid propane.

In the illustrated embodiment, the first and second orifices **97**, **98** can be different sizes. The second orifice **98** can be smaller than the first orifice **97**. This can allow one fuel to use both orifices. For example, in some embodiments, a fuel that uses the smaller of the two orifices can pass through the larger orifice and then the smaller orifice. As another example, a fuel that uses the smaller orifice can pass through the smaller orifice first and then pass through the other orifice. The nozzle can be configured such that the fuel that needs the larger orifice can pass through the larger orifice and not the smaller orifice.

The nozzle **96** can have a first flow configuration or path going through the nozzle **96** passing through both the first and second orifices **97**, **98** and a second flow configuration or path going through only one of the orifices. For example, a flow of natural gas can flow through the first orifice **97** and not through the second orifice **98**.

After exiting the nozzle a fuel can pass into the mixing chamber **66** to be mixed with air as discussed previously. The air shutter **70** can attach to the nozzle **96** so that it will rotate with the nozzle **96** and can be adjusted as described with respect to the user interface surface **72**.

In some embodiments, the nozzle **96** can be made integral with the fuel selector valve **3**, with or without the outlet valve **5**. Making a selection with the fuel selector valve **3** by rotation or otherwise can determine the flow path through the nozzle **96**.

Also shown in FIG. **22**A are the fittings **94** through which the nozzle **96** and ODS channels, connected to the outlets **43** and **45**, pass into the sealed combustion chamber **90**. As the nozzle **96** can make up part of a fuel line, the fuel line and the air shutter control can pass into the sealed combustion chamber **90** through the same fitting **94**. This can beneficially reduce the number of fittings **94**.

The nozzle **96** can have many different configurations. FIG. **23** shows another embodiment of heating source **10** with a nozzle **96**. The cross-sectional view of FIG. **23**A shows the nozzle **96** configured for a first fuel. In some embodiments the first fuel is natural gas. The cross-sectional view of FIG. **23**B shows the nozzle **96** configured for a second fuel. In some embodiments the second fuel is propane.

Referring to FIG. **23**A, in some embodiments the nozzle **96** can have a first chamber **533** and a second chamber **534**. Each chamber can end in an orifice **97**, **98** and each chamber can be configured for receiving a flow of fuel therethrough. As shown, the second chamber **534** is substantially within the first chamber **533**. As also can be seen, orifice **98** of the second chamber **534** is within the first chamber **533**.

In some embodiments, the second orifice **98** can be positioned downstream of the first orifice **97**, as can be seen in FIG. **24**. In addition the first orifice can be made up of a number of holes **99**. The holes can surround the second orifice. In some embodiments there can be more than one row of holes, such as two or three rows of holes surrounding the second orifice. Such a configuration can work to aerate the fuel to achieve more efficient combustion. In some embodiments, the nozzle can be configured such that one fuel, such as propane, can travel through the second orifice **98** and a second fuel, such as natural gas, can travel through the holes **99** of the first orifice **87**. In other embodiments, the nozzle can be configured such that one fuel, such as propane, can travel through the second orifice **98** and a second fuel, such as natural gas, can travel through both the holes **99** of the first orifice **87** and the second orifice **98**. Such a configuration can beneficially produce quieter and more efficient combustion of fuel.

FIGS. **25**A-B show how a heating source **10** with a nozzle **96** connected to the outlet valve **5** and an air shutter **70** can function together with a basket **201** as part of the sealed combustion chamber **90** (see FIG. **20**). The fuel for combustion in the burner can pass through the nozzle and one fitting **94** into the basket **201** of the sealed combustion chamber **90**. The air shutter control can pass through this same fitting. Electrical wires (not shown) from the ODS **180** can pass through the same fitting **94** as the pipes **95** leading to the ODS. This configuration can reduce the number of fittings through to the sealed combustion chamber. This configuration can also greatly simplify the control of the heating source **10** such that one adjustment to select the fuel and then possible minor adjustments to adjust the air shutter are all that is required. These adjustments can all be accomplished with the same control feature, such as the knob **72**.

Referring now to FIGS. **26**A and B, another embodiment of a heating source **10** is shown. The heating source includes a selector valve **3** and an outlet valve **5** which are controlled by a geared mechanism **11**. As shown, the geared mechanism **11** includes a driving gear **16** and two driven gears **18**, **19**, where one driven gear **18** controls the fuel selector valve **3** and one driven gear **19** controls the outlet valve **5**. The user interface surface **72** can be used to rotate the driving gear **16**. This control of the driving gear **16** can be done directly, through other controls, or gears or in other ways. As can be seen, the driving gear **16** can be on the same shaft **26** as the user interface surface **72**. Thus, the user interface surface **72** can provide direct control of the rotation of the driving gear **16**.

The driven gears **18**, **19** can be on a shaft **27**. The shaft **27** can have a threaded portion **29** that can engage a threaded channel **31** on the housing **20**. This can allow the shaft **27** to convert the rotational movement of the gear **18**, **19** into linear movement which can be used to open and close various valves. For example, each shaft can have a first valve **32** and a second valve **34**. As shown in FIG. **26**A, in one position the first valve **32** can be closed and the second valve **34** can be open. In a second position, shown in FIG. **26**B, the first valve **32** can be open and the second valve **34** can be closed. This can allow, for example, either a first fuel or a second fuel to flow into an inlet **35** and out the outlet **37**. This can also allow flow through the inlet **41** and out either of outlets **43** and **45**.

In some embodiments, the user interface surface **72** can be held in a locked position with a spring. Pushing the user interface surface **72** towards the housing **20** can unlock the user interface surface **72** and allow rotation thereof. After pushing and rotating, the user interface surface **72** can assume a locked or unlocked position that is either closer to or farther from the housing **20** in comparison to the prior position. Alternatively, the user interface surface **72** can be configured such that rotating the shaft **26** can also linearly advance the shaft **26**.

The shaft **26** can also include a nozzle control **36**. The nozzle control **36** can control the position of a nozzle shaft **38** within a chamber **39** inside of the nozzle **96**. The nozzle shaft can function in one of two different ways. In some embodiments, the nozzle shaft **38** can also include a chamber **40** with an orifice **98**. In the first position (FIG. **26**A), fuel can flow into the nozzle through chamber **39** and out orifice **97**. Linear movement of the shaft **26** towards the second position (FIG. **26**B) can adjust the position of the nozzle control **36** to and seal and close the chamber **39**. Fuel can then flow through chamber **40** and out of both orifice **98** and then orifice **97**. In this way, the nozzle **96** can be adjusted for use with different

fuels. The nozzle **96** according to certain embodiments can include a spring to bias the nozzle towards either of the first or second positions.

In other embodiments, the position of the nozzle shaft **38** can determine the amount of fluid that can flow out of the exit orifice **97** of the nozzle **96**. For example, fuel can flow through chamber **39** in both the first and second positions and the position of the nozzle shaft **38** within the chamber **39** with respect to the interior surface of the chamber **39** can determine how much fluid can flow through the orifice **97**. In the second position the nozzle shaft **38** can limit the amount of fuel that can reach the orifice **97**. This can have the affect of essentially creating a smaller orifice within the chamber **39**.

Turning now to FIG. **27**, another embodiment of heating source **10** is shown. FIGS. **27**A and B illustrate the heating source in schematic partial cross-sections in first and second configurations, respectively. The heating source is similar in some respects to that shown in FIGS. **26**A and B, except that instead of controlling the valves **32** and **34** through a gearing mechanism, an actuator or linkage **47** is employed to control the positions of valves.

In some embodiments, the actuator **47** can be connected to both shaft **26** and shaft **27** and can rotate about a pin **48**. Thus, linear movement of the shaft **26** in one direction can cause shaft **27** to move in the other direction through the movement of the actuator **47**. In this way, the shaft **27** is able to move between the positions shown, opening and closing the valves. In other embodiments an actuator or bar can be used without a pin. Movement of the shaft **26** would cause a corresponding movement in shaft **27**.

An actuator **47** used with a pin **48** can advantageously be used to scale the amount of movement between the two shafts **26**, **27**. For example, with the pin closer to shaft **26** than to shaft **27**, a small movement in shaft **26** can translate into a larger movement in shaft **27**. With the pin farther away from shaft **26** the opposite would be true.

In some embodiments, the actuator **47** can comprise a metal spring. For example, a metal plate or wire can be shaped with bends as shown in FIG. **27**B. The movement of the shafts **26** and **27** can be configured such that shaft **26** moves more than necessary to open or close the valves **32**, **34**. The extra movement can cause the spring to flex, applying a force on the valve **32**, **34** and thereby holding the valve more firmly in place.

As well as moving linearly, the user interface surface **72** can also rotate. The rotating motion can be used to control the outlet valve **5**. Looking to FIGS. **28**, **28**A and **28**B, it is shown how the outlet valve **5** can control the flow, for example to the ODS, through the outlets **43**, **45**. Flow can enter inlet **41** and travel through channel **51**. The position of the slotted valve **49**, as best seen in FIGS. **28**A and B, can determine whether the flow travels from channel **51** to either channel **50** or **52**. Referring now to the arrows indicating the flow path on FIG. **28**, it can be seen that channel **50** leads to outlet **43** and channel **52** leads to outlet **45**.

FIG. **29** illustrates a cross-section of FIG. **27** with the nozzle **96** in the second position. FIG. **30** shows the nozzle **96** in a first position. It can be seen that the heating source of FIG. **27** can have a nozzle similar to that described above with respect to FIGS. **26**A and B.

In FIG. **31**, another embodiment of a heating source **10** is shown. The heating source **10** is illustrated with a regulator unit **12**, a fuel selector valve **3**, an outlet valve **5**, and a control valve **59**. The control valve **59** comprises both an automatic and a manual control valve. In some embodiments, the automatic valve is connected directly to the fuel selector valve **3** and the outlet valve **5** and the manual valve is connected directly to the automatic valve.

Looking to FIG. **32**, another embodiment of a heating source is illustrated. FIG. **32**A shows schematically the positions of the internal shaft **26** as controlled by the user interface surface **72**. The heating source **10** of FIG. **32** can have three positions. It can have a closed position, a first open position and a second open position. The first open position can correspond to a first fuel and the second open position can correspond to a second fuel. FIGS. **33**-**35**, including the A-C subsets will now be described with respect to these three different positions.

FIGS. **33**, **34**, **35** are schematic and partial cross-sectional views of the heating source of FIG. **32** in the three positions stated above. The user interface surface **72** can control the position of the shaft **26** which can move the heating source between the three positions. The shaft **26** can include various cutouts **61** to allow the shaft **26** to act as a cam. In some embodiments, the actuators **47** can act as followers on the cam. The actuator **47** together with pin **48** and spring **54** can force the actuator into contact with the shaft **26**. Thus, when the actuator **47** engages the cutout **61**, the spring will force the actuator forward into contact with the smaller diameter region of the shaft. This will also cause the shaft **27** to move, opening the valve **32** or **34**. The cutouts **61** can be configured such that in one position, both valves **32**, **34** are closed. The cutouts **61** can also be configured such that in other positions, one or both of the valves **32**, **34** are open. As shown, both valves are closed in FIG. **33**, one valve is open in FIG. **34** and the other valve is open in FIG. **35**.

FIGS. **33**A, **34**A, **35**A are cross-sectional views taken along line A-A of the respective base FIG. **33**, **34** or **35**. FIGS. **33**B, **34**B, **35**B are cross-sectional views taken along line B-B of the respective base FIG. **33**, **34** or **35**. In the A series figures a valve **71** can be seen and in the B series figures a valve **73** is shown. The valves **71**, **73** act as followers to the cam, i.e. shaft **26** and cutouts **61**. Thus the valves **71**, **73** remain closed in the cutout **61** and open when contacting the normal section of the shaft **26**. As an example, in FIG. **34**A, valve **71** is open and in FIG. **34**B, valve **73** is closed.

FIGS. **33**C, **34**C, **35**C are cross-sectional views taken along line C-C of the respective base FIG. **33**, **34** or **35**. As can be seen, the end of shaft **26** can have a channel **53**. Rotating the shaft **26** can open or close the channel **53** to inlet **42**, as well as to the additional channel **55** and the nozzle **96**. The position of channel **53** can determine if and how fuel can flow into the nozzle **96**. In FIG. **33**C, the channel **53** is closed to inlet **42**. In FIG. **34**C, the channel **53** is open to inlet **42** and directs the flow of fuel to both chambers of the nozzle **533** and **534**. In this configuration, fuel can flow out of both orifices **97**, **98**. In FIG. **35**C, the channel **53** is open to inlet **42** and directs the flow of fuel to chamber **534** but blocks the flow of fuel to chamber **533** of the nozzle **96**. In this configuration, fuel flows out of orifice **98**.

Looking now to one set of figures, FIGS. **35**-**35**C, it can be seen that in this configuration, valve **34** is open, as is valve **73** and valves **32** and **71** are closed. Also, channel **53** is open to inlet **42** and configured to direct fuel to chamber **534** while blocking flow to chamber **533**.

The heating source **10** as described herein has many benefits. One of these benefits is its versatility. As shown and described the heating sources **10** can be used for many different types of gas appliances. Manufacturing a basic component that can be used in many different situations may significantly reduce costs across the different product lines. For example, a heating source **10** in one configuration can be used in a vent free heater **100** and in another configuration or

in the same configuration can be used in a direct vent heater **210**. In both instances the heating source **10** can allow the appliance to use one of either of two different fuels. The different fuels can also be at different pressures.

As a further example, many of the same parts may be used to produce the heating source **10** shown in FIG. **11** as that shown in FIG. **22**. In some embodiments, the outer valve body **20** shown in FIG. **11** can be used with the outlet valve **5** and nozzle **96** shown in FIG. **22**. Caps **58** can be used to close unnecessary outlets **44** and **46**. Thus, the heating source **10** is a modular unit with many different uses and possible configurations. As also described herein the heating source **10** can comprise a number of different components that can connect directly to one another without the use of additional connecting pipes, with FIGS. **13**A-D being but one example.

Reference throughout this specification to "one embodiment" or "an embodiment" means that a particular feature, structure or characteristic described in connection with the embodiment is included in at least one embodiment. Thus, appearances of the phrases "in one embodiment" or "in an embodiment" in various places throughout this specification are not necessarily all referring to the same embodiment. Furthermore, the particular features, structures or characteristics of any embodiment described above may be combined in any suitable manner, as would be apparent to one of ordinary skill in the art from this disclosure, in one or more embodiments.

Similarly, it should be appreciated that in the above description of embodiments, various features of the inventions are sometimes grouped together in a single embodiment, figure, or description thereof for the purpose of streamlining the disclosure and aiding in the understanding of one or more of the various inventive aspects. This method of disclosure, however, is not to be interpreted as reflecting an intention that any claim require more features than are expressly recited in that claim. Rather, as the following claims reflect, inventive aspects lie in a combination of fewer than all features of any single foregoing disclosed embodiment. Thus, the claims following the Detailed Description are hereby expressly incorporated into this Detailed Description, with each claim standing on its own as a separate embodiment.

What is claimed is:

1. A dual fuel heating source comprising:

a first pressure regulator to regulate a flow of a first fuel;

a second pressure regulator to regulate a flow of a second fuel different from the first fuel and at a higher pressure than the first fuel;

a fuel selector valve having a first position configured to permit a flow of the first fuel from the first pressure regulator through the fuel selector valve and to prevent a flow of the second fuel therethrough and having a second position configured to permit a flow of the second fuel from the second pressure regulator through the fuel selector valve and to prevent a flow of the first fuel therethrough;

an outlet valve having a set of inlets and first and second sets of outlets wherein in a first position of the outlet valve flow is permitted into the set of inlets through the outlet valve to the first set of outlets and in a second position of the outlet valve flow is permitted into the set of inlets through the outlet valve to the second set of outlets;

wherein the fuel selector valve and the outlet valve are separately sealed valves coupled together by a connecting shaft configured to cause the fuel selector valve and the outlet valve to rotate in an axially aligned manner such that selecting the first position on fuel selector valve also selects the first position on the outlet valve and selecting the second position on the fuel selector valve also selects the second position on the outlet valve.

2. The dual fuel heating source of claim **1**, wherein the set of inlets comprise an ODS inlet and a burner inlet and each of the first and second sets of outlets comprises an ODS outlet and a burner outlet.

3. The dual fuel heating source of claim **2**, wherein the first ODS and burner outlets are configured to direct fuel to an ODS and a burner nozzle, respectively, configured for use with the first fuel, and the second ODS and burner outlets are configured to direct fuel to an ODS and a burner nozzle, respectively, configured for use with the second fuel.

4. The dual fuel heating source of claim **1**, wherein the first fuel comprises natural gas and the second fuel comprises liquid propane.

5. The dual fuel heating source of claim **2**, further comprising a control valve controlling an amount of flow from the fuel selector valve through the control valve to the ODS and burner inlets.

6. The dual fuel heating source of claim **1**, wherein the dual fuel heating source comprises part of a heater, oven, dryer or boiler.

7. The dual fuel heating source of claim **2**, further comprising an air shutter adjustment.

8. The dual fuel heating source of claim **1**, wherein the fuel selector valve and the outlet valve rotate about a same axis and each valve is frustoconically shaped with the point directed at one another.

9. The dual fuel heating source of claim **1**, wherein the first pressure regulator is configured to provide a pressure in the range from about 3 inches of water column to about 6 inches of water column.

10. The dual fuel heating source of claim **1**, wherein the second pressure regulator is configured to provide a pressure in the range from about 8 inches of water column to about 12 inches of water column.

11. The dual fuel heating source of claim **1**, further comprising a control valve wherein the control valve is connected to the fuel selector valve and controls the amount of fuel flowing from the fuel selector valve to the outlet valve.

12. The dual fuel heating source of claim **5**, wherein the control valve comprises at least one of a manual valve, a thermostat valve, an AC solenoid, and a DC solenoid.

* * * * *