United States Patent [19]

McLean

[11] 4,335,697

[45] Jun. 22, 1982

[54] INTERNAL COMBUSTION ENGINE DUAL FUEL SYSTEM

[76] Inventor: Kerry L. McLean, 20540 Westhampton, Southfield, Mich. 48075

[21] Appl. No.: 138,434

[22] Filed: Apr. 8, 1980

[51] Int. Cl.[3] F02M 13/06

[52] U.S. Cl. 123/527; 123/525

[58] Field of Search 123/525, 527

[56] References Cited

U.S. PATENT DOCUMENTS

1,973,142	9/1934	Day et al.	123/527
2,315,882	4/1943	Trimble	123/525
2,357,947	9/1944	Gerson	123/527
2,381,304	8/1945	Merrill	123/527
2,939,775	6/1960	Middleton	123/527
4,068,639	1/1978	Cook	123/525

Primary Examiner—Ronald B. Cox

Attorney, Agent, or Firm—Hauke and Pataladis

[57] ABSTRACT

An internal combustion engine dual fuel system for controllably running the internal combustion engine on a liquid fuel, such as gasoline, in the usual manner or, at will, on liquified petroleum (LP) gaseous fuel. The conventional liquid fuel system of the internal combustion engine is unmodified except for the addition of a remotely controlled shut-off valve in the fuel line at the carburetor fuel inlet. An LP gas suction verturi is disposed in the air induction flow to the carburetor inlet, for example by being mounted in the air filter above the carburetor inlet, and is supplied in fuel from the vapor phase of an LP gas, such as butane or propane, above the level of the liquified gas in an appropriate tank. The LP gas tank and the line supplying the gas to the carburetor air inlet are maintained at a substantially constant temperature via a by-pass of the engine coolant circuit, the flow of coolant through the by-pass being automatically controlled by a thermostat. A manual control, in the form of an electrical switch, is provided for shutting off the flow of LP gas while running the engine on conventional liquid fuel, and shutting off the flow of liquid fuel to the carburetor while running the engine on LP gas.

40 Claims, 5 Drawing Figures

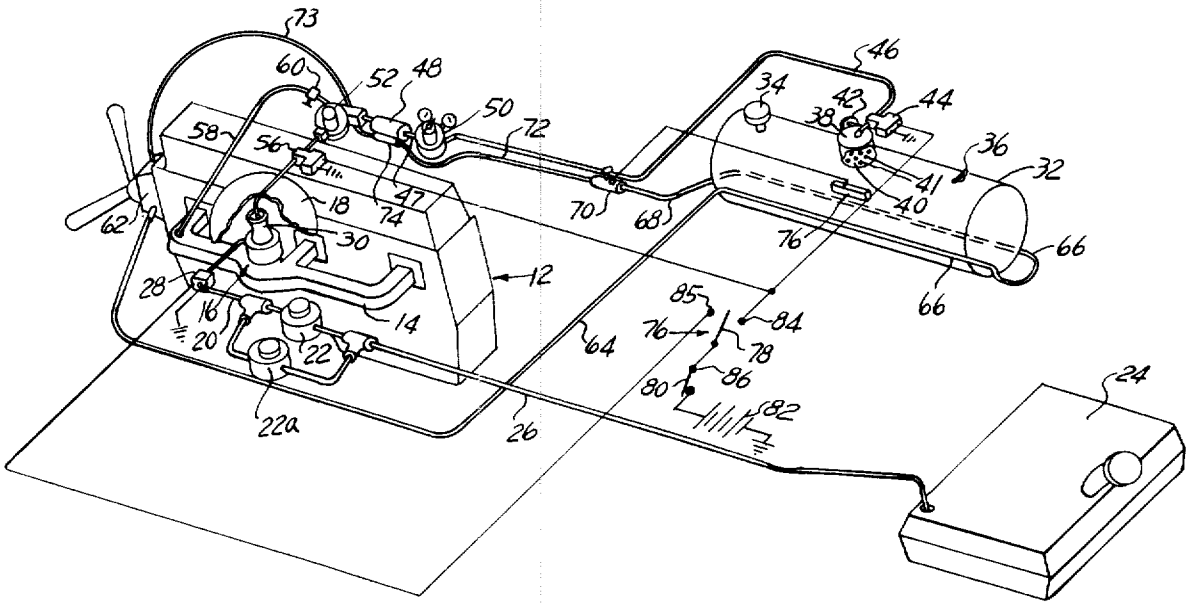

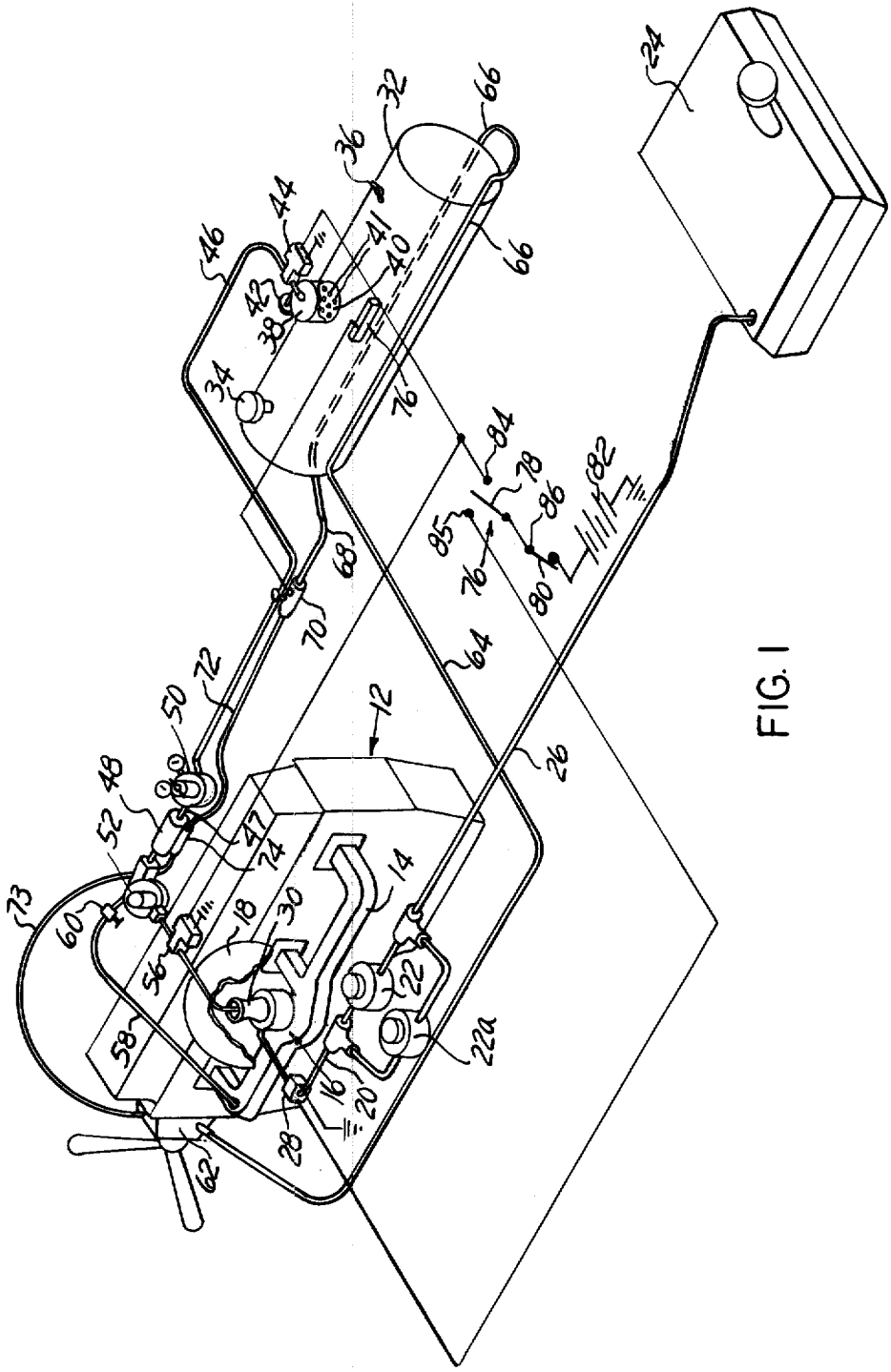
12
14
16
18
20
22
22a
24
26
28
30
32
34
36
38
39
40
41
42
44
46
47
48
50
52
56
58
60
62
64
66
66
68
70
72
73
74
76
76
78
80
82
84
85
86

FIG. 1

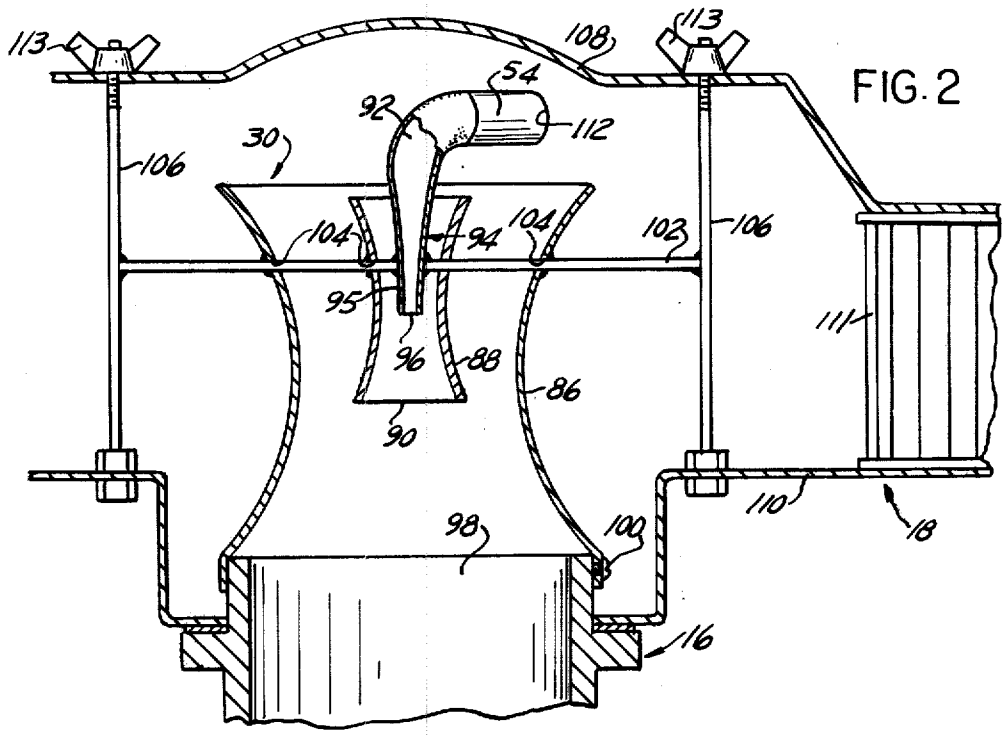
113
108
113
54
92
112
30
106
104
94
104
102
106
95
111
96
88
86
90
110
18
98
100
16

FIG. 2

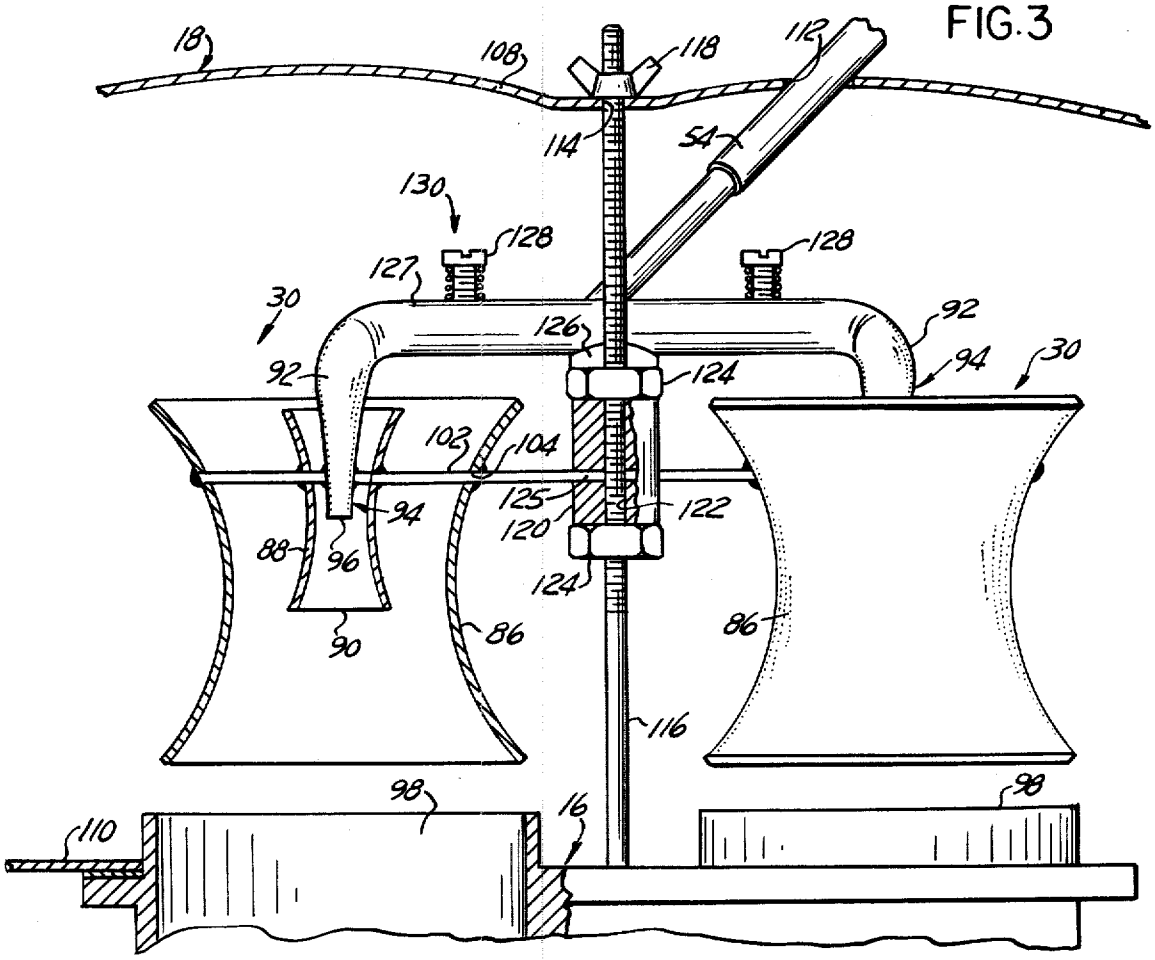
18
108
118
112
114
54
130
128
128
127
30
126
92
92
94
30
124
102
104
125
122
94
120
88
96
124
90
86
86
116
98
98
110
16

FIG. 3

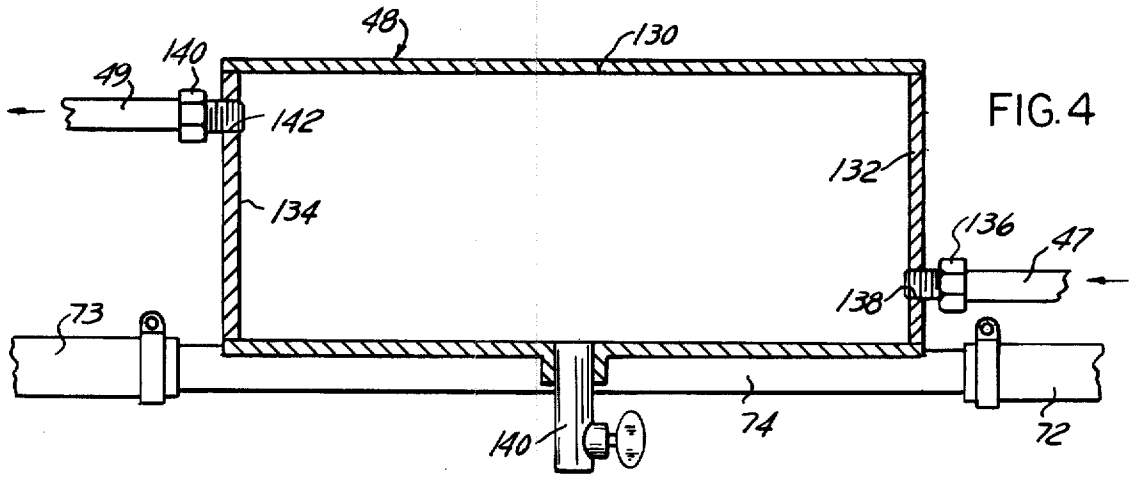
48
130
140
49
142
134
132
136
47
138
73
74
72
140

FIG. 4

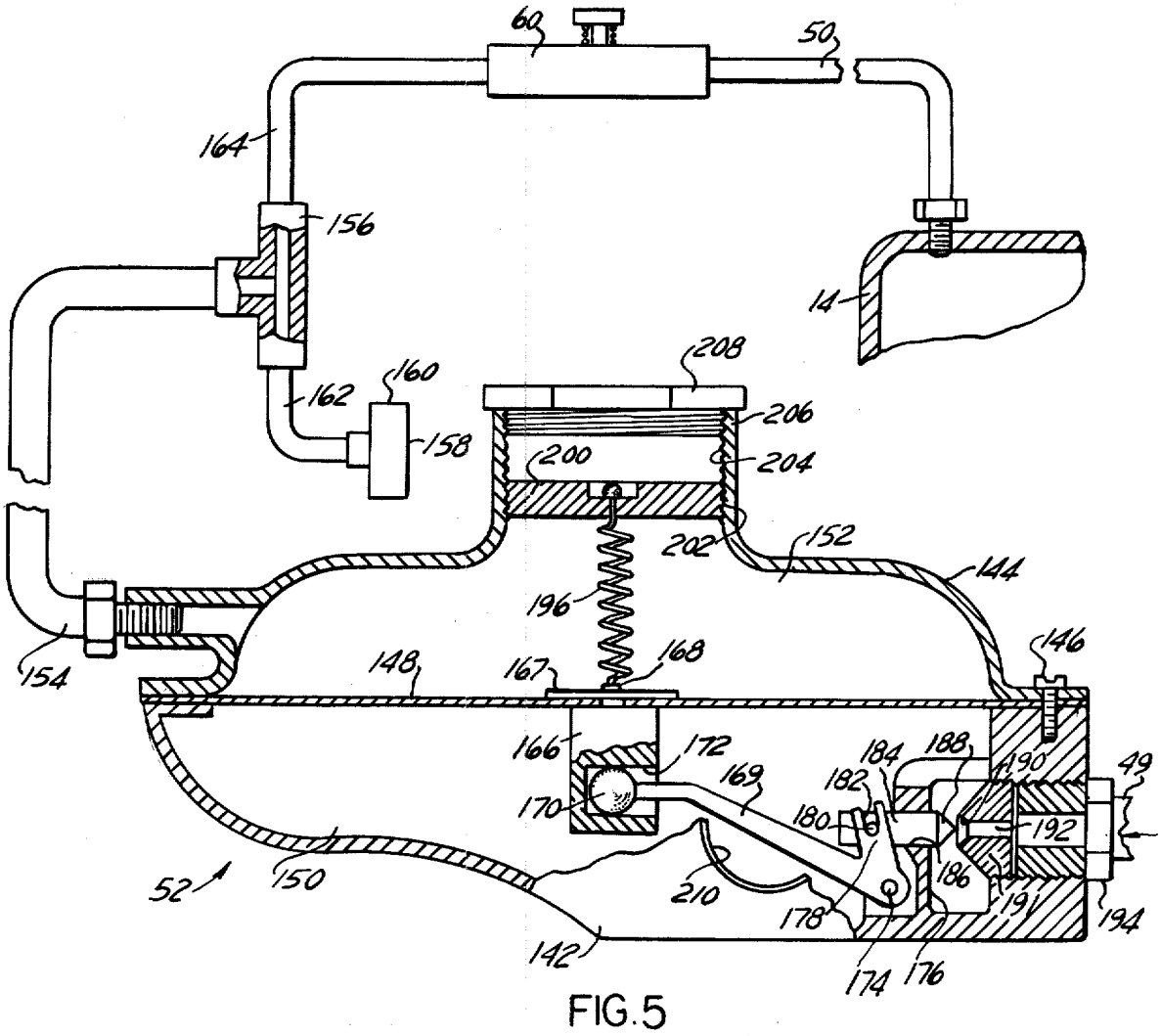
60
50
164
156
14
208
160
162
206
158
200
204
202
152
144
196
146
154
148
167
168
166
172
169
184
188
190
49
182
170
180
192
52
150
210
186
178
191
194
142
174
176

FIG. 5

INTERNAL COMBUSTION ENGINE DUAL FUEL SYSTEM

BACKGROUND OF THE INVENTION

The present invention relates to liquified petroleum (LP) gas fuel system for internal combustion engines, and more particularly to a dual fuel system permitting to run an internal combustion engine at will on LP gas or on conventional liquid fuel, such as gasoline.

The air pollution problems inherent in the operation of gasoline fueled and diesel-oil fueled internal combustion engines are well known. Although various emission control devices have been used in the past and are presently in use, and although emission control devices are required by federal legislation and regulations to reduce the amount of pollutants discharged in the atmosphere by internal combustion engines, emission control devices are not entirely satisfactory, they are subject to deterioration with the passage of time, and they are often a hindrance preventing the internal combustion engine from operating at best efficiency and at an economical fuel consumption rate.

Liquid fuels, other than gasoline and diesel fuel, have been proposed for the purpose of reducing consumption of fossil fuels and of decreasing the quantity and the toxicity of the pollutants discharged in the atmosphere. Natural gas and LP gases, such as porpane and butane, have also been proposed as a replacement for conventional liquid fuels such as gasoline, for the purpose of reducing atmospheric pollution, decreasing the operating costs of internal combustion engines, as compared to the costs of operating on gasoline, and the volume of contaminant emission, as compared to gasoline, without complex emission control devices, or for the purpose of entirely eliminating emission control devices. The use of natural gas as a fuel for internal combustion engines is convenient for stationary engines, such as pipeline compressor engines, engines used in oil field operations, water pumping, or production of electricity, for example. However, the use of natural gas as a fuel for internal combustion engine mobile installations, such as in motor vehicles and the like, presents many inconveniences as natural gas must be compressed in thick-walled tanks at a very high pressure, and a battery of a plurality of relatively small high pressure tanks is required for providing a motor vehicle with a reasonable range between refueling stops. Furthermore, natural gas compressor stations are not readily available to the average motorist.

The use of LP gases, such as butane and preferably propane, presents many advantages over the use of natural gas for fueling internal combustion engines. For example, propane is in a liquid phase under a relatively low pressure at room temperature and requires only thin-walled tanks for safe containment. Many systems using LP gases for fueling internal combustion engines have been proposed and some are presently in use in particular applications such as for service trucks, small tractors, lift trucks and the like, in manufacturing plants and in mines, and for fueling motor vehicles operated by LP gas producers, distributors and dealers.

An example of LP gas fuel systems for motor vehicles is disclosed in U.S. Pat. No. 2,855,759, and diverse dual fuel systems have been proposed to permit conventional internal combustion engines to run on a gaseous fuel, or to run at will on a gaseous fuel or on a liquid fuel such as gasoline, as desired, as disclosed for example in U.S. Pat. Nos. 4,056,087 and 4,063,905 and in Popular Mechanics of September, 1979 (page 48) and April, 1980 (pages 108–109, 201). In heretofore known LP gas fueling systems or dual fuel LP gas and gasoline systems, whether the LP gas is supplied from the LP gas tank in a liquid or in a gaseous phase, complete dual fuel mixing systems are required, thus necessitating the replacement of the conventional gasoline carburetor by an LP gas mixer, or by LP gas mixer and gasoline carburetor combined in a single unit or, in the alternative, by mounting a complex gas mixer at the inlet of the carburetor or in the form of a flange adapter between the carburetor and the engine inlet manifold.

SUMMARY OF THE INVENTION

The principal object of the invention is to provide a relatively simple but efficient dual fuel system for an internal combustion engine allowing the internal combustion engine to run on conventional gasoline fuel or on LP gas fuel, such as propane for example, without any modification to the internal combustion engine or to the gasoline fuel system. The present invention also provides an LP gas fuel system for a conventional internal combustion engine which may be substituted for the gasoline fuel system if so desired, although when used in a dual fuel system is permits to run an internal combustion engine on gasoline fuel or on LP gas fuel, at will, and to switch from one type of fuel to the other without requiring special adjustment or set-up of the carburetor system or of the ignition system.

This, and other objects of the present invention, will become apparent to those skilled in the art, when the following description of an example of the best modes contemplated for practicing the invention is read in conjunction with the accompanying drawing wherein:

BRIEF DESCRIPTION OF THE DRAWING

FIG. **1** is a schematic of an example of dual fuel system for internal combustion engines according to the present invention;

FIGS. **2** and **3** are schematic representations of examples of LP gas double venturi mixer adapter disposed at the inlet of a conventional gasoline carburetor, according to the present invention;

FIG. **4** is a schematic partial section through a portion of the fuel system of FIG. **1**; and

FIG. **5** is a schematic partial section through another portion of the fuel system of FIG. **1**.

DETAILED DESCRIPTION OF THE PREFERRED EMBODIMENTS

Referring now to FIG. **1**, there is illustrated in a schematic manner an internal combustion engine **12** provided with an inlet manifold **14** having appropriate tubular branches leading to the valved intake ports of the engine cylinders. The inlet manifold **14** is provided with an appropriate intake opening over which is mounted a conventional carburetor **16** provided with a conventional air filter **18**. The carburetor **16** is supplied in gasoline through a line **20** from the pressure side of a fuel pump **22** whose suction side is connected to the outlet of a gasoline fuel tank **24** via a line **26**. The fuel pump **22** may be a conventional mechanically driven pump or, preferably, it may be an electric pump. A solenoid actuated valve **28** is placed in the fuel line **20** between the outlet of the pump **22** and the inlet of the carburetor **16**. The exhaust manifold of the engine **12** is

not represented. The engine **12** is an engine having its cylinders in line, such as a six-cylinder in line, for example, although it is evident that the invention is adaptable to any type of internal combustion engines, preferably of the spark-ignition type.

In a dual fuel system, according to the invention, LP gas, such as propane for example, is fed to the air intake of the carburetor **16** by means of a double venturi proportional mixer **30** installed within the air cleaner **18**, as described in further detail hereinafter. The propane gas or vapor is supplied from a tank **32** provided with an appropriate filler valve **34** for filling to not more than about 95% of its liquid volume capacity with liquid propane such as to leave above the level of the liquidfied gas a space or head filled with propane vapor. As commercial quality propane boils at atmospheric pressure around −44° F. (−42° C.), and its vapor pressure at −40° F. (−40° C.) is 3.6 PSIG which progressively increases to 128 PSIG at 70° F. (21° C.), a head of gaseous propane is always present above the level of liquid propane in the tank **32**, within an extended range of ambient temperatures. The tank **32** is provided at its top with an over-pressure relief valve **36**, for safety purpose, which may be vented by an appropriate line, not shown, to the exterior of a motor vehicle body, and with a vapor collecting dome **38** mounted, such as by welding, over an aperture in the tank wall provided with a vapor trap consisting of a partition **40** provided with a plurality of small apertures **41**. The vapor collecting dome **38**, with its vapor trap partition **40**, ensures that only propane vapor fills the dome **38**, any liquid propane due to condensation, or to sloshing or overflowing of the tank being returned to the main portion of the tank **32** through the apertures **41** in the vapor trap partition **40**.

Propane vapor under pressure flows from the dome **38** through a manually controllable shut-off valve **42** and an electrically actuated solenoid shut-off valve **44** into a line **46** supplying propane gas to an expansion chamber **48** through a high pressure regulator **50** and a line **47**. Gaseous propane flows, via a line **49** from the expansion chamber **48** through a vacuum operated control valve **52** to a low pressure propane vapor line **54** connected to the propane gas venturi inlet **30** mounted above the carburetor **16**. An electrically actuated shut-off valve **56** is disposed in the low pressure line **54**, and the suction side of the vacuum control valve **52** is connected via an appropriate line **58** to the interior of the inlet manifold **14**. Between the inlet manifold **14** and the suction side of the vacuum control valve **52**, a suitable adjustable regulator needle valve **60** is disposed to manually preset the amount of suction from the inlet manifold required to operate the vacuum control valve **52** to vary the flow of propane gas through the control valve **52** as a function of the load on the engine **12**, as represented by the variations in suction in the inlet manifold **14**, for best overall operation efficiency and fuel economy.

A hot coolant by-pass system is tapped at the engine water pump **62** and comprises a hose **64** supplying hot coolant to a tank heater pipe **66**, or to a pair of tank heater pipes **66**, as illustrated, which are mounted in contact with the exterior wall of the propane tank **32**, preferably at the bottom thereof. The outlet of the pipe or pipes **66** is connected to a return hose **68** which, through a manually and solenoid operated valve **70**, returns the hot coolant to the engine coolant circulation system through an intermediate return line **72** and a heating pipe **74** defining a heat exchanger for the expansion chamber **48**. Preferably, the propane gas feed line **46** from the tank **32** to the high pressure regulator **50** is in physical engagement with the hot coolant return hose **68** and the return intermediate line **72**, such as to ensure that, during normal operation, condensation or extreme cooling of the gas passing through the propane gas feed line is avoided through heat convected from the hot coolant return hose and line **68** and **72** to the propane gas feed line **46**. The intermediate coolant return line **72**, for the same reason, is laid in proximity and actually engaged with the high pressure regulator **50**, and the heating pipe **74** of the expansion chamber **48** supplies heat to the expansion chamber to prevent condensation and to heat the propane gas flowing therethrough.

The hot coolant flow valve **70** is automatically operated from a temperature-sensing bulb or thermostat **76** such that the flow of coolant through the tank heating pipe or pipes **66** is turned on or shut off in such manner as to maintain the temperature of the propane tank **32**, and of the propane contained therein, at a predetermined temperature preferably in the vicinity of 80° F. (26.5° C.), thus providing a substantially constant vapor pressure in the high pressure gas feed line **46**, substantially 140 PSIG for such a temperature, resulting in a highly regulated flow of propane gas through the high pressure system without any large fluctuation of pressure. The flow of hot coolant through the system may be reverse of that described without influencing in any way the overall performance of the dual fuel system of the invention.

The high pressure propane gas shut-off valve **44** and the low pressure propane gas shut-off valve **56** are operated simultaneously from a three-position control switch **77** whose movable contact **78** is connected through, for example, the motor vehicle ignition switch **80** to the motor vehicle electrical battery **82**, when the movable contact **78** of the switch **77** is in engagement with its fixed contact **84**. By placing the movable contact **78** of the switch **77** in such position, the engine **12** is operated on propane gas, and in such a position of the switch movable contact the gasoline shut-off valve **28** shuts off the supply of gasoline to the carburetor **16**. When the movable contact **78** of the switch **77** is engaged with its other fixed contact **85**, the propane gas supply valves **44** and **36** are automatically shut off and the gasoline supply shut-off vavle **28** is turned on. In such a position of the switch movable contact, the engine **12** is operating on gasoline fuel.

If it is desired to operate the engine **12** on LP gas alone, there is no need, obviously, for the gasoline fuel tank **24**, the gasoline feed line **26** and the gasoline fuel pump **22** and they may be removed or disconnected and the gasoline feed line inlet fitting to the carburetor **16** is plugged. In dual fuel installations, when it is desired to run the engine **12** on gasoline only, the switch **77** is operated from its neutral position to the position engaging the movable contact **78** with the fixed contact **85** to open the gasoline shut-off valve **28**. As, during normal operation with the propane fuel system of the invention, the float chamber, not shown, of the carburetor **16** has been emptied, if the engine has been shut off while running on propane fuel, unless there is no objection against cranking the engine for a sufficiently long period of time that permits the pump **22** to replenish the float chamber of the carburetor with gasoline, it is best to use as a fuel pump **22** an electric pump rather than a

mechanically actuated pump or, in the alternative, to install an electric fuel pump, as shown at 22*a* shunting the mechanical pump or, alternately, mounted in series in the fuel line **26**, such that by activating the electrical fuel pump **22***a* for a few seconds prior to starting the engine, the carburetor float bowl is replenished with gasoline.

In dual fuel systems, the engine **12** may thus be started and run on gasoline, in the usual manner, or it may be started and run on propane gas. In addition, as will be explained hereinafter in further detail, while operating on one fuel, the operation of the engine may be shifted to the other fuel, at will.

When it is desired to start the engine **12** on propane gas, the switch **77** is operated from its neutral position to the position engaging the movable contact **78** with the fixed contact **84**. The propane gas high pressure shut-off valve **44** and the low pressure shut-off valve **56** are simultaneously activated such as to allow flow of propane gas therethrough. Due to the low temperature of vaporization propane, and as long as the ambient temperature is above about −40° F. (−40° C.), there is enough propane vapor pressure and flow through the system to provide sufficient flow through the line **54** into the double venturi **30** to enable starting the engine and starting driving the motor vehicle, in motor vehicle installations. As the engine warms up to normal operation temperatures, hot coolant circulates through the hose **64**, the pipe or pipes **66**, the return lines **68** and **72** and the heat transfer pipe **74** of the expansion chamber **48**, to maintain the propane fuel tank **32** and its contents, the propane gas feed lines and the expansion chamber to a fairly constant temperature as regulated by the thermostat **76**. The regulator **50** is preset to reduce the pressure of the propane gas downstream of the regulator anywhere between 2 and 15 psi, depending on the calibration of the system, the size of the lines and fittings, and the predetermined fuel requirement of the engine **12**. The expansion chamber **48**, which is normally maintained at engine temperature, acts as a trap for oil, water, or foreign materials which may be entrained in the propane gas flow and, more importantly yet, the expansion chamber acts as a storage for excess propane gas that may be called upon during sudden acceleration as a result of suddenly opening the throttle valve of the carburetor **16**. The vacuum valve **52** regulates the flow of propane gas to the double venturi inlet **30** to the carburetor **16**, as previously mentioned, as a function of the load demand on the engine, resulting in a self-regulating fuel and air mixture ratio remaining substantially constant.

While running the engine **12** on propane gas, if it is desred to switch over to gasoline fuel, the switch **77** is operated such that the movable contact **78** is displaced from engagement with the stationary contact **84** to engagement with the stationary contact **85**. The propane gas shut-off valves **44** and **56** are automatically returned to their shut-off position, thus cutting off the supply of propane gas to the double venturi inlet **30** to the carburetor **16** and opening the gasoline supply shut-off valve **28**. Gasoline fuel is supplied to the carburetor float bowl through the line **20** from the fuel pump **22**, and the engine **12**, after a predetermined delay during which the float bowl of the carburetor fills up with gasoline, is ready to operate exclusively on gasoline. The delay may be shortened by means of an electric pump being substituted for the mechanical fuel pump or by using an auxiliary electric pump **22***a* started prior to effecting the switch-over. The auxiliary electric pump **22***a* may be mounted, as shown, such as to shunt the mechanical pump **22**, or it may be disposed in series with the mechanical pump **22** in the fuel line **26** or **20**. When it is desired to switch back running the engine on propane gas, the switch **76** is actuated to its neutral position, which operates the shut-off valve **28** to cut off supply of gasoline to the carburetor. It is best to wait until the engine loses power, thus indicating that the supply of gasoline stored in the carburetor float bowl has been exhausted, before displacing the switch **77** to the position engaging its movable contact **78** with the stationary contact **84** re-establishing the propane gas fuel system into normal operation.

It will be readily appreciated that appropriate delays may be built in the control system to ensure proper switch-over from operating on one fuel to operating on the other, such that the supply of gasoline in the carburetor bowl is exhausted prior to the propane gas geing turned on and that, during switch-over from propane gas to gasoline fuel, the supply of gasoline in the carburetor float bowl is automatically re-established before switch-over is accomplished.

As illustrated at FIG. **2**, the double venturi **30** comprises an outer venturi member **86** having an inner smaller diameter venturi member **88** disposed concentrically therein. The inner venturi member **88** has a total length which is approximately one-half that of the larger outer venturi member **86** such that the outlet **90** of the inner venturi member is disposed substantially in the plane of the smallest inner diameter of the outer venturi member **86**. The propane gas low pressure line **54** is connected to an elbow fitting **92** ending in a nozzle **94** disposed concentrically within the inner venturi member and being in the form of a tapered tubular body member **95** defining a nozzle outlet **96** disposed substantially in a plane corresponding to the plane of smallest diameter of the interior of the inner venturi **88**. In such manner, the air flowing into the outer venturi **86** on its way to the intake throat **98** of the carburetor **16** creates a maximum drop of pressure at the outlet **90** of the inner venturi member **88**, thus causing a high velocity flow through the inner venturi **88**. The outlet **96** of the propane gas supply nozzle **94** being placed on the plane of maximum velocity of the air flow through the inner venturi **88** creates maximum suction of the supplied propane gas providing thorough mixing of the propane gas with the entrained air, maximum flow of gas with full throttle opening, minimum flow of gas with fully closed throttle, except for idling adjustment, and no flow of gas upon shutting off the engine, as the pressure of the propane gas flowing through the low pressure line **54** and the nozzle **94** is lower than atmospheric pressure.

FIG. **2** represents a typical installation for single barrel carburetor or, in the alternative, a typical installation for a single double venturi unit **30** mounted over the intake of a multiple-barrel carburetor. In the example of structure of FIG. **2**, the outer venturi member **86** is mounted directly on the inlet of the carburetor **16** by means of, for example, set screws **100**, and concentrically supports by way of at least a pair of diametrally disposed rods **102** the inner venturi member **88** and the gas supply nozzle **94**, the rods **102** passing through appropriately aligned apertures **104** through the walls of the venturi members **86** and **88** and being soldered or brazed thereto at the edge surface of the apertures **104**. One end of the rods **102** is soldered, brazed or welded to

the peripheral surface of the tapered body portion **95** of the nozzle **94**. The other end of the rods **102** is soldered, brazed or welded to vertically disposed studs **106** which interconnect the cover **108** and the housing **110** of the air filter **10** provided with a conventional air filter element **111**, the low pressure gas line **54** being passed through an appropriate aperture **112** in the air filter cover **108**. The air filter cover **108** is provided with apertures through which are passed the threaded end of the studs **106**, wing nuts **113** being used for holding the cover **108** in position.

It is readily apparent that other means are available for installing the propane gas nozzle and double venturi assembly within the air filter. For example, the gas nozzle-venturi assembly **30** may be mounted in any convenient position in the air filter **18** such as being, for example attached to the rod holding the air filter cover **108** in position, such an arrangement being shown schematically at FIG. **3** for supplying propane gas at the intake of a multiple-barrel carburetor, such as a double-barrel carburetor **16**.

In the structure of FIG. **3**, the cover **108** of the air filter **18** is held in position in a conventional manner as being provided with a central aperture **114** through which passes the threaded end of a rod **116** attached at its other end to the housing of the carburetor **16**, a wing nut **118** being used for holding the air filter cover **108** in position. Although a single gas nozzle-venturi unit **30** could be used, having an over-all diameter large enough to cover the inlet throats **98** of all the carburetor barrels, a two-barrel twin venturi assembly **130** is illustrated, formed of a pair of nozzle-venturi assemblies **30**, each disposed over, and a slight distance away from, the inlet throat **98** of each carburetor barrel. The twin venturi assembly **130** is supported by a bracket **120** having a central aperture **122** through which is passed a portion of the rod **116**, a pair of nuts **124** being used for clamping the support bracket **120** in position over the rod **116**. The ends of the support rods **102** for the nozzle-venturi assemblies **30** are fastened through, for example, radial bores **125**, disposed in the support bracket **120** and are soldered, brazed or welded therein. The support bracket **120** has an arm **126** at the end of which is soldered, brazed or welded a bifurcated gas header **127** provided at each end with a gas nozzle **94**. The gas header **127** is connected to the low pressure propane gas line **54**, and each branch of the gas header **127** may be provided with a flow rate adjusting screw **128**, such as to balance and equalize the gas flow rate through each nozzle **94** in synchronized action multi-barrel carburetor installations, and as to pre-set the gas flow rate proportions between nozzles in progressive action multi-barrel carburetor installations.

Referring to FIG. **4**, there is illustrated in section the propane gas expansion chamber **48** formed of a tubular member **130** provided with end closure plates **132** and **134** brazed or welded in position. Propane gas is introduced into the space within the tubular member **130** and the end plates **132** and **134** from the pressure regulator **50**, FIG. **1**, by way of the connection inlet line **47** and an appropriate threaded fitting **136** threading through an appropriate threaded aperture **138** disposed at a relatively low level in the end closure plate **132**. The propane gas stored within the expansion chamber **48** is supplied on demand to the proportioning and modulating valve **52**, FIG. **1**, through the connection line **49** provided on its end with an appropriate fitting **140** threaded into a threaded aperture **142** disposed at a relatively higher level through the end closure plate **134**. Heat is supplied from the intermediate hot coolant line **72** to the heat exchanger pipe **74**, and from the heat exchanger pipe **74** is returned to the engine coolant system via the return line or hose **73**. The heat exchanger pipe **74** is welded or brazed to a portion of the peripheral surface of the tubular member **130**. A drain pipe and petcock **140** is disposed at a low point of the tubular member **130** for occasionally draining the interior of the expansion chamber **48** from any accumulation of oil, water, or any other materials which may condense or be trapped within the expansion chamber, and which are generally present in commercial grade propane.

FIG. **5** illustrates the detail of the proportioning and modulating valve **52** disposed downstream from the expansion chamber **48**, and supplying the propane gas on demand to the low pressure line **54**, FIG. **1**, through the shut-off valve **56**. The valve **52**, as illustrated in detail at FIG. **5**, has a housing **142** provided with a cover **144** fastened over the housing by means of appropriate fasteners such as screws **146**, a flexible diaphragm **148** being clamped between the housing **142** and the cover **144** at their junction plane. The flexible diaphragm **148** separates the interior of the valve **52** into two chambers, a gas chamber **150** disposed below the flexible diaphragm **148** and a vented chamber **152** disposed above the flexible diaphragm **148**. The pressure in the vented chamber **152** varies as a function of the pressure inside the inlet manifold **14**, from atmospheric pressure when the engine is shut off to lower than atmospheric pressure when the engine is running. For that purpose, rather than being placed directly in communication with the inlet manifold **14**, as schematically illustrated at FIG. **1**, the vented chamber **152** preferably is placed in communication, via a line **154** and through a T-connector **156**, to the line **58** through which is circulating air drawn into the inlet manifold **14** at a flow rate which is a function of the vacuum within the inlet manifold **14**. The air is drawn into the inlet manifold **14** in minute amount through the line **58** as adjusted by the needle valve **60**, the air being caused to flow from an inlet **158**, provided preferably with a small air filter **160**, through a line **162** connected to the T-connector **156**, and through a line **164** between the T-connector and the needle valve **60**. In such manner, the rate of air flow from the filtered inlet **158** to the manifold **14** through the line **162**, the T-connector **156**, the line **164**, the needle valve **60** and the line **58** is modulated as a function of the load of the engine. The modulated flow of air through the circuit creates a suction within the T-connector **156** resulting in a modulation of the variable pressure in the vented chamber **152** below atmospheric pressure.

A stud member **166** is fastened to the lower face of the flexible diaphragm **148**, within the gas chamber **150** of the valve **52**, by means of a retainer nut or disc **167** threading over a threaded reduced diameter portion **168** of the stud member **166** passed through an appropriate mounting aperture in the flexible diaphragm **148**. The stud member **166** is operatively coupled to an end of a lever **169** by means of a spherical member **170** formed integrally on the end of the lever **168** and slidably engaged in a radial bore **172** in the stud member **166**. The lever **169** pivots around a pivot pin **174** affixed to a web portion **176** of the housing **142**, the lever arm **169** being provided on its pivoting end with a bifurcated arm member **178** which, by means of a radial pin **180** en-

gaged in a slot **182** formed in the end of the arm member **178**, reciprocates a valve needle in the form of a plunger **184** reciprocable within a bore **186** on the end of the web **176** of the housing **142**. The needle valve plunger **184** has a conical end **188** engageable with the conical set **190** of an insert **191** defining an inlet port **192** into the gas chamber **150**, the inlet gas line **49** being connected to the inlet port **192** by means of an appropriate fitting **194**.

A tension coil spring **196** is fixedly attached at one end to the mounting end **168** of the stud member **166** and at its other end to an adjustment disc **200** having a peripheral thread **202** engaging the inner thread **204** formed in a cylindrical neck portion **206** of the valve cover **144**. The coil spring **196** is adapted to adjustably urge the diaphragm **148** in deformation towards the chamber **152**. The opening in the cylindrical neck portion **206** of the valve cover **144** is obturated by a closure plug **208**, after adjustment of the amount of pull exerted on the flexible diaphgram **148** by the spring **196** as a result of rotating the adjusting disc **200** in one direction or the other.

When the butterfly valve, not shown, of the carburetor **16**, FIG. **1**, is closed, the pressure in the inlet manifold **14** is very low, and atmospheric air flows from the air inlet **158** through the line **162**, the T-connector **156**, the line **164**, the needle valve **60** and the line **58** at a relatively high rate, thus causing a strong suction to be exerted on the end of the line **154** connected to the T-connector **156**. This results in the pressure within the vacuum chamber **152** of the valve **52** dropping to a minimum. The diaphragm **148** is therefore displaced towards the chamber **152**, upwardly displacing the stud member **166** and, through the lever **169**, displacing the valve plunger **184** to the right, as seen in the drawing, thus causing the conical end **188** of the valve plunger **184** to be displaced toward the conical seat **190** of the valve seat insert **191** at the inlet port **192** of the gas chamber **150** and, consequently reducing to a minimum the flow of propane gas from the expansion chamber **48** through the inlet port **192** into the gas chamber **150**. As the gas chamber **150** is connected to an appropriate outlet **210** in the valve housing **142** to the low pressure gas inlet line **54**, FIG. **1**, the flow of gas through the inlet line **54** to the gas venturi **30** is reduced to a minimum, just enough to permit the engine to idle. However, when the carburetor throttle valve is wide open, pressure inside the inlet manifold **14** increases, thus reducing the flow of air from the air inlet **158** through the line **164**, the T-connector **156**, the line **164**, the needle valve **60** and the line **58** to a minimum. The pressure in the chamber **152** of the proportioning valve **52** increases, thus permitting the diaphragm **148** to return towards the gas chamber **150**. The stud member **166** is displaced downwardly, with the result that the valve needle plunger **184** is displaced leftwardly in a direction which increases the space between the conical end **188** of the valve needle plunger and the conical valve seat **190**, thus increasing the flow of gas through the port **192** into the gas chamber **150**, and out of the gas chamber through the outlet **210**, via the low pressure line **54** to the gas venturi **30**. In such manner, the gas flow through the low pressure line **54**, FIG. **1**, is modulated as a function of the carburetor throttle valve opening, with the result that propane gas flow to the venturi **30** is reduced during idling or low power operation of the engine, and is increased as a function of the power demand on the engine as represented by throttle opening.

Providing a motor vehicle with an LP gas vapor fuel system, such as a propane vapor fuel system, according to the present invention permits to effectuate considerable savings in the cost of operating the vehicle, in view of the fact that, at present rates, the cost per gallon of liquified propane is considerably less than the cost of a gallon of gasoline, and it has been experimentally found that the propane gas fuel system of the invention provides slightly better mileage per gallon of liquified propane than provided per gallon of gasoline, an improvement of about 10% in most installations, contrary to what is achieved by prior art propane fuel systems. The system of the invention requires no modification to the engine or gasoline carburetor and, although liquified propane provides slightly less BTU per gallon than gasoline, it has been found that running a motor vehicle on propane vapor or gas according to the present invention provides no noticeable difference in power output, because of the more thorough mixing of the fuel-air intake charge and the better combustion of the charge in the cylinders. While running on propane gas, the engine runs generally smoother than while running on gasoline. Another advantage of propane over gasoline is that it has a very high octane rating, thus allowing high compression ratios, it burns much cleaner and it does not discharge any toxic or obnoxious contaminants into the atmosphere. Cold starts are improved as the fuel is fully vaporized prior to reaching the carburetor, there is no fuel line freeze-up in the winter and no vapor lock problems in the summer. The engine may be run somewhat leaner than when running on gasoline.

By installing a dual-fuel system according to the invention on a motor vehicle, better use of available fuels is achieved and, by leaving the gasoline fuel system intact and installing, in the luggage compartment for example, a propane tank of the same capacity as the conventional gasoline fuel tank, the range of the vehicle can be doubled before both tanks are run dry, and great flexibility in the use of available fuels may be enjoyed according to whatever fuel is in greater supply and at a lower price.

Having thus described the present invention by way of an example of an embodiment thereof, modifications whereof will be apparent to those skilled in the art, what is claimed as new is as follows:

1. An LP gas fuel feed system for an internal combustion engine having an intake for a fuel-air mixture, said fuel feed system comprising a tank containing said LP gas under pressure in a liquid form, first gas conduit means having an inlet disposed in said tank above the level of said LP gas in a gaseous form, second gas conduit means, pressure regulator means between said first and second gas conduit means for reducing the pressure of said LP gas in a gaseous form during passage from said first gas conduit means to said second gas conduit means, an expansion chamber in said second gas conduit means, gas flow modulation means for modulating the flow of said gas through said second gas conduit means as a function of power requirement of said engine, means at the end of said second conduit means for supplying a mixture of said gas and of air at the intake of said internal combustion engine, means for heating said tank, said expansion chamber and at least a portion of said conduit means, and means for maintaining said tank at a predetermined temperature.

2. The fuel feed system of claim **1** wherein said heating means comprises a heat exchanger means engaged with the surface of said tank, and conduit means for

supplying hot coolant from the cooling system of said engine to said heat exchanger means.

3. The fuel feed system of claim 1 wherein said means for maintaining said tank at a predetermined temperature comprises temperature sensitive control means attached to said tank, and means controlled by said temperature sensitive control means for turning on and off said means for heating said tank.

4. The fuel feed system of claim 2 further comprising temperature sensitive control means attached to said tank and valve means disposed in said heat coolant conduit means for shutting off and re-establishing the flow of hot coolant therethrough.

5. The fuel feed system of claim 1 further comprising gas flow shut-off means disposed at the inlet of said first gas conduit means and at the outlet of said second gas conduit means.

6. The fuel feed system of claim 1 further comprising gas flow shut-off means, a carburetor mounted at said internal combustion engine intake, a liquid fuel tank and liquid fuel feed means connecting said liquid fuel tank to said carburetor, liquid fuel flow shut-off means, and control means for operating said liquid fuel shut-off means to a shut-off position while simultaneously turning on said gas flow shut-off means.

7. An LP gas fuel feed system for an internal combustion engine having an intake for a fuel-air mixture, said fuel feed system comprising a tank containing said LP gas under pressure in a liquid form, first gas conduit means having an inlet disposed in said tank above the level of said LP gas in a gaseous form, second gas conduit means, pressure regulator means between said first and second gas conduit means for reducing the pressure of said LP gas in a gaseous form during passage from said first gas conduit means to said second gas conduit means, an expansion chamber in said second gas conduit means, gas flow modulation means for modulating the flow of said gas through said second gas conduit means as a function of power requirement of said engine, and means at the end of said second conduit means for supplying a mixture of said gas and of air at the intake of said internal combustion engine, wherein said gas flow modulation means comprises a housing, a deformable flexible diaphragm separating said housing into a first and a second chamber, conduit means placing the inlet manifold of said engine in communication with the atmosphere, second conduit means placing said first conduit means in communication with said first chamber for varying the pressure in said first chamber as a function of the flow of atmospheric air in said first conduit means, a gas inlet port and a gas outlet in said second chamber, reciprocating valve plunger means for gradually closing and opening said inlet port, and pivoting lever means having an end attached in said second chamber to said flexible diaphragm and another end attached to said reciprocating valve plunger means for urging said plunger to a position tending to obturate said inlet port upon displacement of said flexible diaphragm towards said first chamber for modulating the flow of gas into said second chamber as an inverse function of the pressure of said first chamber.

8. An LP gas fuel feed system for an internal combustion engine having an intake for a fuel-air mixture, said fuel feed system comprising a tank containing said LP gas under pressure in a liquid form, first gas conduit means having an inlet disposed in said tank above the level of said LP gas in a gaseous form, second gas conduit means, pressure regulator means between said first and second gas conduit means for reducing the pressure of said LP gas in a gaseous form during passage from said first gas conduit means to said second gas conduit means, an expansion chamber in said second gas conduit means, gas flow modulation means for modulating the flow of said gas through said second gas conduit means as a function of power requirement of said engine, and means at the end of said second conduit means for supplying a mixture of said gas and of air at the intake of said internal combustion engine, wherein said expansion chamber comprises a tubular member closed at both ends, inlet means introducing said LP gas in said tubular member at a predetermined level, outlet means from said tubular member at a level higher than said predetermined level, and means applying heat to said expansion chamber.

9. The fuel feed system of claim 8 further comprising drain means disposed in said tubular member for draining the interior of said tubular member.

10. An LP gas fuel feed system for an internal combustion engine having an intake for a fuel-air mixture, said fuel feed system comprising a tank containing said LP gas under pressure in a liquid form, first gas conduit means having an inlet disposed in said tank above the level of said LP gas in a gaseous form, second gas conduit means, pressure regulator means between said first and second gas conduit means for reducing the pressure of said LP gas in a gaseous form during passage from said first gas conduit means to said second gas conduit means, an expansion chamber in said second gas conduit means, gas flow modulation means for modulating the flow of said gas through said second gas conduit means as a function of power requirement of said engine, and means at the end of said second conduit means for supplying a mixture of said gas and of air at the intake of said internal combustion engine, wherein said means for supplying a mixture of said gas and of air at the intake of said internal combustion engine comprises a first venturi-shaped conduit, a second venturi-shaped conduit disposed concentric within said first venturi-shaped conduit and having an inlet substantially at the inlet of said first venturi-shaped conduit and an outlet substantially at the level of the smallest diameter of said first venturi-shaped conduit, and a gas nozzle connected to the end of said gas conduit means and disposed concentric within said second venturi-shaped conduit with its outlet substantially at the level of the smallest diameter of said second venturi-shaped conduit.

11. The fuel feed system of claim 2 further comprising gas flow shut-off means, a carburetor mounted at said internal combustion engine intake, a liquid fuel tank and a liquid fuel feed means connecting said liquid fuel tank to said carburetor, liquid fuel flow shut-off means, and control means for operating said liquid fuel shut-off means to a shut-off position while simultaneously turning on said gas flow shut-off means.

12. The fuel feed system of claim 2 further comprising gas flow shut-off means, a carburetor mounted at said internal combustion engine intake, a liquid fuel tank and liquid fuel feed means connecting said liquid fuel tank to said carburetor, liquid fuel flow shut-off means, and control means for operating said liquid fuel shut-off means to a shut-off position while simultaneously turning on said gas flow shut-off means.

13. The fuel feed system of claim 2 further comprising gas flow shut-off means, a carburetor mounted at said internal combustion engine intake, a liquid fuel tank and liquid fuel feed means connecting said liquid fuel tank to

said carburetor, liquid fuel flow shut-off means, and control means for operating said liquid fuel shut-off means to a shut-off position while simultaneously turning on said gas flow shut-off means.

14. The fuel feed system of claim **3** further comprising gas flow shut-off means, a carburetor mounted at said internal combustion engine intake, a liquid fuel tank and liquid fuel feed means connecting said liquid fuel tank to said carburetor, liquid fuel flow shut-off means, and control means for operating said liquid fuel shut-off means to a shut-off position while simultaneously turning on said gas flow shut-off means.

15. The fuel feed system of claim **4** further comprising gas flow shut-off means, a carburetor mounted at said internal combustion engine intake, a liquid fuel tank and liquid fuel feed means connecting said liquid fuel tank to said carburetor, liquid fuel flow shut-off means, and control means for operating said liquid fuel shut-off means to a shut-off position while simultaneously turning on said gas flow shut-off means.

16. The fuel feed system of claim **5** further comprising a carburetor mounted at said internal combustion engine intake, a liquid fuel tank and liquid fuel feed means connecting said liquid fuel tank to said carburetor, liquid fuel flow shut-off means, and a control means for operating said liquid fuel shut-off means to a shut-off position while simultaneously turning on said gas flow shut-off means.

17. The fuel feed system of claim **6** further comprising gas flow shut-off means, a carburetor mounted at said internal combustion engine intake, a liquid fuel tank and liquid fuel feed means connecting said liquid fuel tank to said carburetor, liquid fuel flow shut-off means, and control means for operating said liquid fuel shut-off means to a shut-off position while simultaneously turning on said gas flow shut-off means.

18. The fuel feed system of claim **7** further comprising gas flow shut-off means, a carburetor mounted at said internal combustion engine intake, a liquid fuel tank and liquid fuel feed means connecting said liquid fuel tank to said carburetor, liquid fuel flow shut-off means, and control means for operating said liquid fuel shut-off means to a shut-off position while simultaneously turning on said gas flow shut-off means.

19. The fuel feed system of claim **8** further comprising gas flow shut-off means, a carburetor mounted at said internal combustion engine intake, a liquid fuel tank and liquid fuel feed means connecting said liquid fuel tank to said carburetor, liquid fuel flow shut-off means, and control means for operating said liquid fuel shut-off means to a shut-off position while simultaneously turning on said gas flow shut-off means.

20. The fuel feed system of claim **7** further comprising means for heating said tank, said expansion chamber and at least a portion of said conduit means.

21. The fuel feed system of claim **20** further comprising means for maintaining said tank at a predetermined temperature.

22. The fuel feed system of claim **20** wherein said heating means comprises a heat exchanger means engaged with the surface of said tank, and conduit means for supplying hot coolant from the cooling system of said engine to said heat exchanger means.

23. The fuel feed system of claim **21** wherein said means for maintaining said tank at a predetermined temperature comprises temperature sensitive control means attached to said tank, and means controlled by said temperature sensitive control means for turning on and off said means for heating said tank.

24. The fuel feed system of claim **22** further comprising temperature sensitive control means attached to said tank and valve means disposed in said heat coolant conduit means for shutting off and re-establishing the flow of hot coolant therethrough.

25. The fuel feed system of claim **7** further comprising gas flow shut-off means disposed at the inlet of said first gas conduit means and at the outlet of said second gas conduit means.

26. The fuel feed system of claim **7** further comprising gas flow shut-off means, a carburetor mounted at said internal combustion engine intake, a liquid fuel tank and liquid fuel feed means connecting said liquid fuel tank to said carburetor, liquid fuel flow shut-off means, and control means for operating said liquid fuel shut-off means to a shut-off position while simultaneously turning on said gas flow shut-off means.

27. The fuel feed system of claim **8** further comprising means for heating said tank, said expansion chamber and at least a portion of said conduit means.

28. The fuel feed system of claim **27** further comprising means for maintaining said tank at a predetermined temperature.

29. The fuel feed system of claim **27** wherein said heating means comprises a heat exchanger means engaged with the surface of said tank, and conduit means for supplying hot coolant from the cooling system of said engine to said heat exchanger means.

30. The fuel feed system of claim **28** wherein said means for maintaining said tank at a predetermined temperature comprises temperature sensitive control means attached to said tank, and means controlled by said temperature sensitive control means for turning on and off said means for heating said tank.

31. The fuel feed system of claim **29** further comprising temperature sensitive control means attached to said tank and valve means disposed in said heat coolant conduit means for shutting off and re-establishing the flow of hot coolant therethrough.

32. The fuel feed system of claim **8** further comprising gas flow shut-off means disposed at the inlet of said first gas conduit means and at the outlet of said second gas conduit means.

33. The fuel feed system of claim **8** further comprising gas flow shut-off means, a carburetor mounted at said internal combustion engine intake, a liquid fuel tank and liquid fuel feed means connecting said liquid fuel tank to said carburetor, liquid fuel flow shut-off means, and control means for operating said liquid fuel shut-off means to a shut-off position while simultaneously turning on said gas flow shut-off means.

34. The fuel feed system of claim **10** further comprising means for heating said tank, said expansion chamber and at least a portion of said conduit means.

35. The fuel feed system of claim **34** further comprising means for maintaining said tank at a predetermined temperature.

36. The fuel feed system of claim **34** wherein said heating means comprises a heat exchanger means engaged with the surface of said tank, and conduit means for supplying hot coolant from the cooling system of said engine to said heat exchanger means.

37. The fuel feed system of claim **35** wherein said means for maintaining said tank at a predetermined temperature comprises temperature sensitive control means attached to said tank, and means controlled by

said temperature sensitive control means for turning on and off said means for heating said tank.

38. The fuel feed system of claim **36** further comprising temperature sensitive control means attached to said tank and valve means disposed in said heat coolant conduit means for shutting off and re-establishing the flow of hot coolant therethrough.

39. The fuel feed system of claim **10** further comprising gas flow shut-off means disposed at the inlet of said first gas conduit means and at the outlet of said second gas conduit means.

40. The fuel feed system of claim **10** further comprising gas flow shut-off means, a carburetor mounted at said internal combustion engine intake, a liquid fuel tank and liquid fuel feed means connecting said liquid fuel tank to said carburetor, liquid fuel flow shut-off means, and control means for operating said liquid fuel shut-off means to a shut-off position while simultaneously turning on said gas flow shut-off means.

* * * * *