US007905469B2

(12) **United States Patent**
**Nickels et al.**

(10) **Patent No.: US 7,905,469 B2**
(45) **Date of Patent: Mar. 15, 2011**

(54) **GASEOUS FUEL MIXING DEVICE**

(75) Inventors: **Travis J. Nickels**, Milwaukee, WI (US); **Jimmy L. Meronek**, Burlington, WI (US)

(73) Assignee: **Briggs and Statton Corporation**, Wauwatosa, WI (US)

( * ) Notice: Subject to any disclaimer, the term of this patent is extended or adjusted under 35 U.S.C. 154(b) by 376 days.

(21) Appl. No.: **12/118,833**

(22) Filed: **May 12, 2008**

(65) **Prior Publication Data**

US 2008/0290531 A1 Nov. 27, 2008

**Related U.S. Application Data**

(60) Provisional application No. 60/931,843, filed on May 25, 2007.

(51) **Int. Cl.**
***F02M 21/04*** (2006.01)

(52) **U.S. Cl.** ..... **261/16**; 123/527; 261/23.2; 261/23.3; 261/52; 261/DIG. 74

(58) **Field of Classification Search** ..... 123/527–529; 261/16, 23.2, 23.3, 52, DIG. 74
See application file for complete search history.

(56) **References Cited**

U.S. PATENT DOCUMENTS

| | | | | |
|---|---|---|---|---|
| 871,134 | A | | 11/1907 | Monnier et al. |
| 1,383,994 | A | | 7/1921 | Olson |
| 1,808,587 | A | | 6/1931 | Adams |
| 1,885,331 | A | | 11/1932 | Collins |
| 2,725,865 | A | | 12/1955 | McDuffie |
| 2,737,170 | A | | 3/1956 | McDuffie |
| 3,089,685 | A | | 5/1963 | Hennemann et al. |
| 3,843,338 | A | * | 10/1974 | Zonker et al. ..... 48/180.1 |
| 3,948,226 | A | | 4/1976 | Green et al. |
| 3,970,059 | A | | 7/1976 | Pisar |
| 4,158,280 | A | | 6/1979 | Thomas et al. |
| 4,216,744 | A | | 8/1980 | Oswald et al. |
| 4,235,828 | A | | 11/1980 | Howes |
| 4,327,553 | A | | 5/1982 | Rilett |
| 4,351,300 | A | | 9/1982 | Selvidge et al. |
| 4,386,594 | A | | 6/1983 | Szloboda |
| 4,398,521 | A | | 8/1983 | Schuurman |

(Continued)

FOREIGN PATENT DOCUMENTS

EP 1383994 8/2007

(Continued)

OTHER PUBLICATIONS

Beam LP-Gas Products Carburetion Product Catalogue, Available at least as early as Nov. 1988, 146 pages.

(Continued)

*Primary Examiner* — Richard L Chiesa
(74) *Attorney, Agent, or Firm* — Michael Best & Friedrich LLP

(57) **ABSTRACT**

A gaseous fuel mixing device includes a body having an air/fuel passageway and a gaseous fuel passageway in fluid communication with the air/fuel passageway, a throttle valve pivotably coupled to the body and positioned in the air/fuel passageway, and an intake unit coupled to the body. The intake unit includes an inlet configured to be fluidly connected with a source of gaseous fuel, a first jet fluidly communicating the inlet and the gaseous fuel passageway, a second jet selectively fluidly communicating the inlet and the gaseous fuel passageway, and a selector valve operable to control a flow of gaseous fuel through the second jet.

**33 Claims, 16 Drawing Sheets**

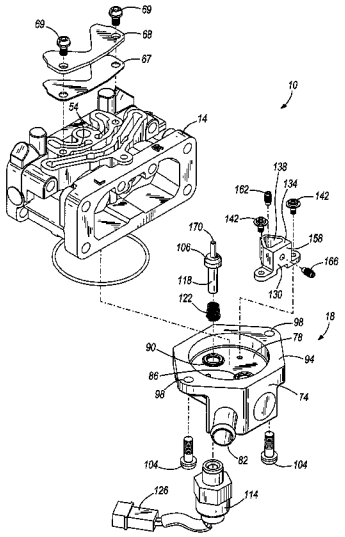

U.S. PATENT DOCUMENTS

| | | | | | |
|---|---|---|---|---|---|
| 4,413,474 | A | | 11/1983 | Moscrip | |
| 4,415,507 | A | | 11/1983 | Voliva | |
| 4,430,275 | A | | 2/1984 | Horton | |
| 4,492,207 | A | * | 1/1985 | Hallberg | 123/527 |
| 4,492,208 | A | | 1/1985 | Lent | |
| 4,502,435 | A | * | 3/1985 | Tadokoro et al. | 123/198 F |
| 4,508,189 | A | * | 4/1985 | Kato | 180/219 |
| 4,528,966 | A | | 7/1985 | Lent et al. | |
| 4,535,728 | A | | 8/1985 | Batchelor | |
| 4,553,519 | A | | 11/1985 | Masson | |
| 4,570,587 | A | | 2/1986 | Watanabe et al. | |
| 4,651,682 | A | | 3/1987 | Pefley et al. | |
| 4,688,537 | A | | 8/1987 | Calkins et al. | |
| 4,826,517 | A | | 5/1989 | Norman | |
| 4,884,530 | A | | 12/1989 | Boekhaus et al. | |
| 5,010,868 | A | | 4/1991 | Clements | |
| 5,042,238 | A | | 8/1991 | White, III et al. | |
| 5,069,190 | A | | 12/1991 | Richards | |
| 5,343,699 | A | | 9/1994 | McAlister | |
| 5,411,058 | A | | 5/1995 | Welsh et al. | |
| 5,476,082 | A | | 12/1995 | Carpenter et al. | |
| 5,542,398 | A | | 8/1996 | Marcon | |
| 5,581,986 | A | | 12/1996 | Calver | |
| 5,676,117 | A | | 10/1997 | Williams | |
| 5,678,527 | A | | 10/1997 | Suzuki et al. | |
| 5,775,309 | A | | 7/1998 | Burrahm | |
| 5,803,035 | A | | 9/1998 | Guntly | |
| 5,868,117 | A | | 2/1999 | Moote et al. | |
| 6,120,007 | A | | 9/2000 | Grant | |
| 6,250,261 | B1 | * | 6/2001 | Santarossa | 123/27 GE |
| 6,276,345 | B1 | * | 8/2001 | Nelson et al. | 123/525 |
| 6,481,698 | B1 | * | 11/2002 | Calvin et al. | 261/23.2 |
| 7,410,152 | B2 | * | 8/2008 | Yates | 261/23.2 |
| 7,591,257 | B2 | * | 9/2009 | Bayer et al. | 123/575 |
| 2006/0236986 | A1 | * | 10/2006 | Fujisawa et al. | 123/527 |
| 2007/0074452 | A1 | * | 4/2007 | Yates | 48/144 |
| 2008/0060626 | A1 | | 3/2008 | Bayer et al. | |

FOREIGN PATENT DOCUMENTS

| | | | | | |
|---|---|---|---|---|---|
| EP | 1808587 | | 10/2007 | | |
| GB | 1315867 | | 5/1973 | | |
| GB | 2012356 | | 7/1979 | | |
| JP | 57-203851 | | 12/1982 | | |
| JP | 60-176820 | | 9/1985 | | |
| JP | 3-279659 | A * | 12/1991 | | 123/527 |
| JP | 6-193512 | | 7/1994 | | |
| WO | 02073015 | | 9/2002 | | |

OTHER PUBLICATIONS

Beam Products Mfg. Co. LP-Gas Conversions Product Brochure, Mar. 1985, 2 pages.

Lady, Paul, "Don't Overlook the Small Engine Market," Gas Industries, The Magazine of LP-Gas Distribution, Nov. 1974, 4 pages.

Osenga, Mike, "Honda adds first dual-fuel engines," Diesel Progress North American Edition, May 2003, 2 pages.

WINCO Product Brochure, "Home Power Tri-Fuel Portable Generator," Oct. 2002, 2 pages.

* cited by examiner

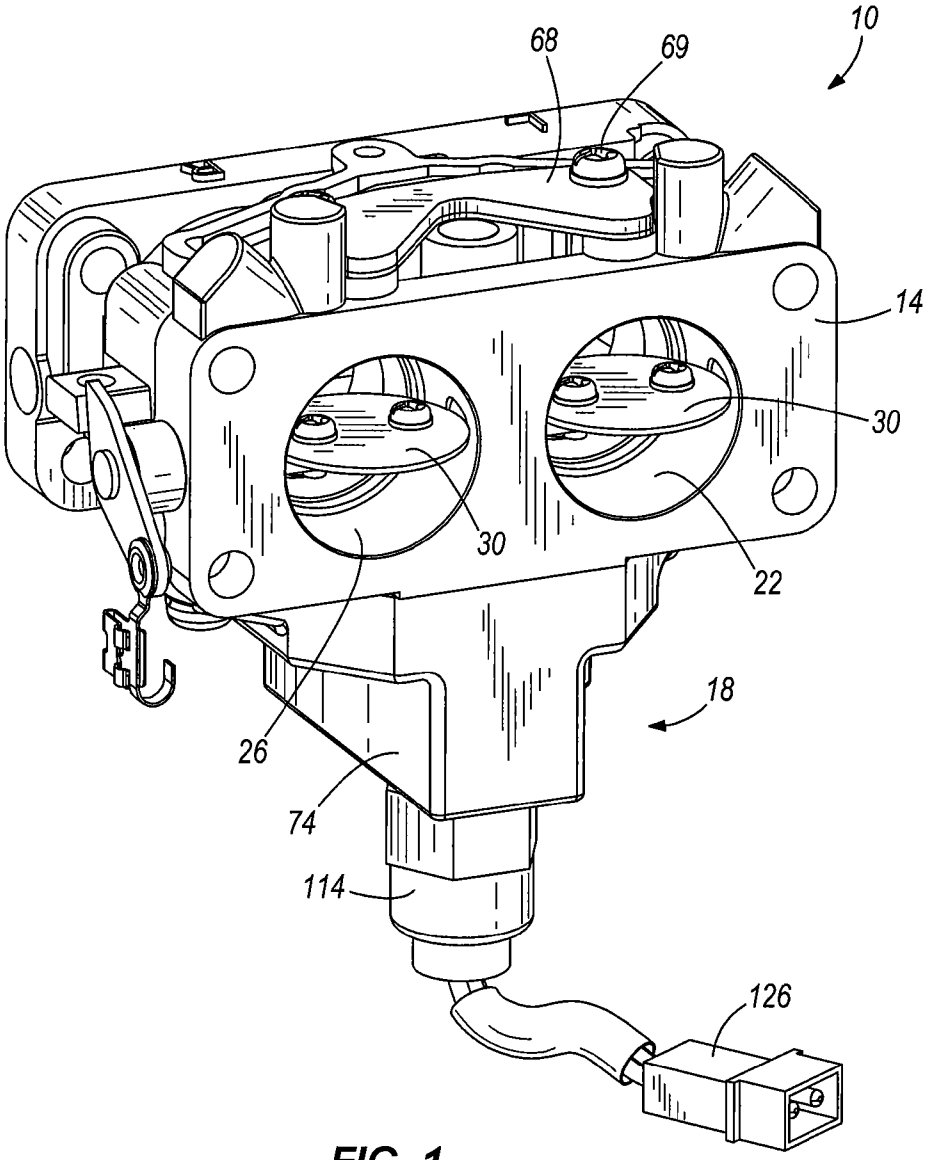


FIG. 1

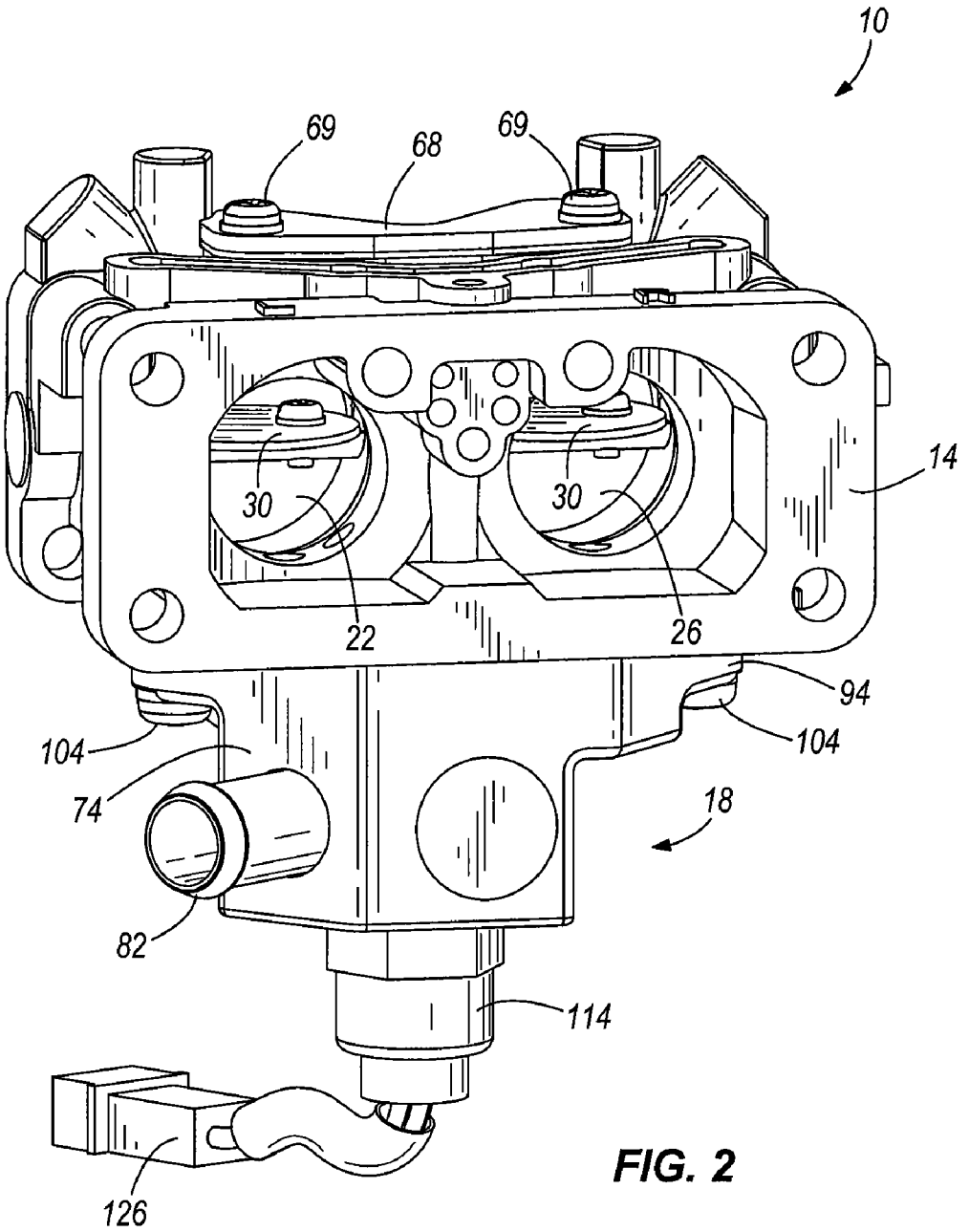


FIG. 2

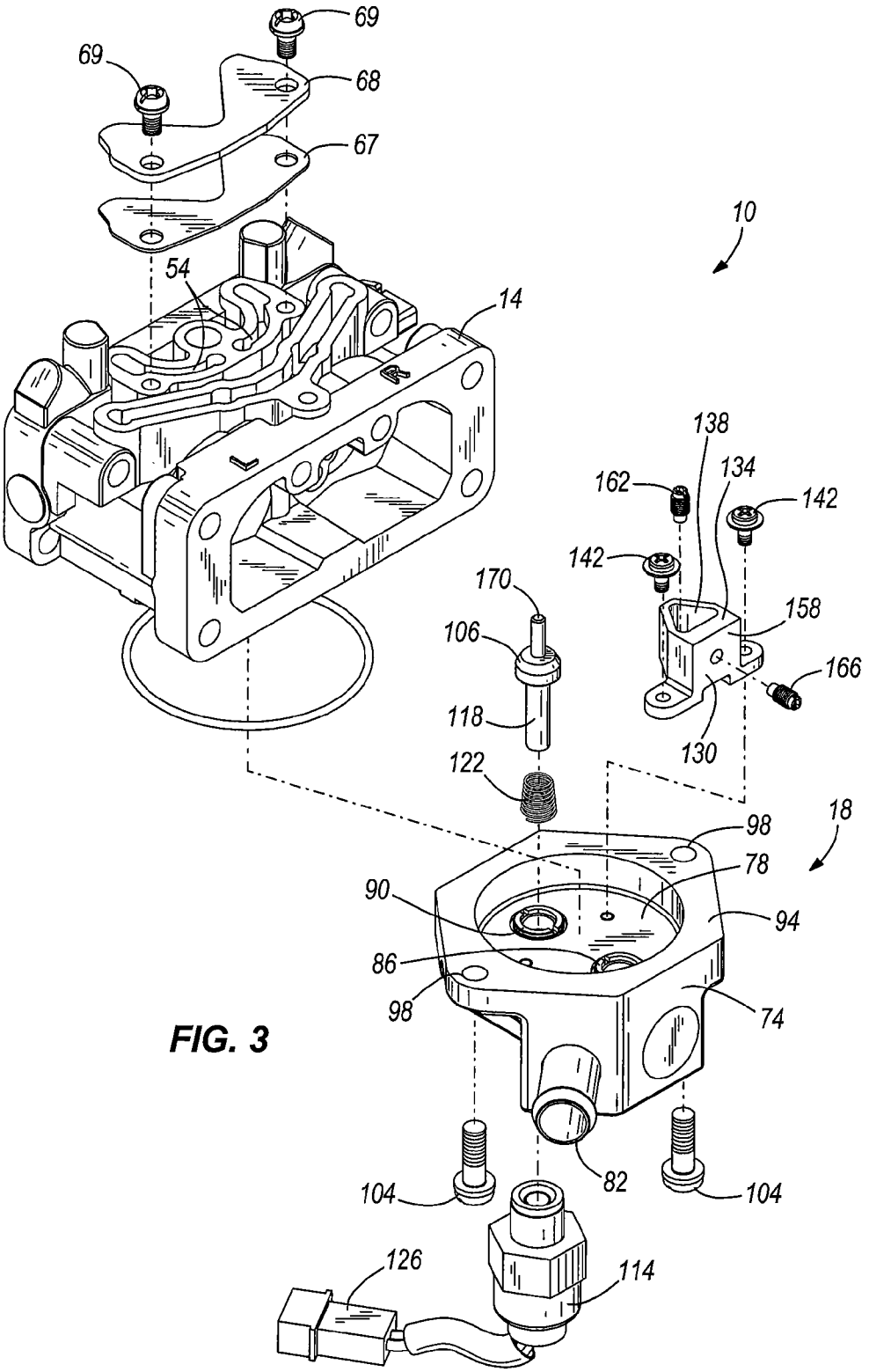
69
69
68
67
10
54
14
138
134
162
142
142
170
158
106
166
118
130
122
18
98
78
90
94
86
98
74
82
104
104
126
114

FIG. 3

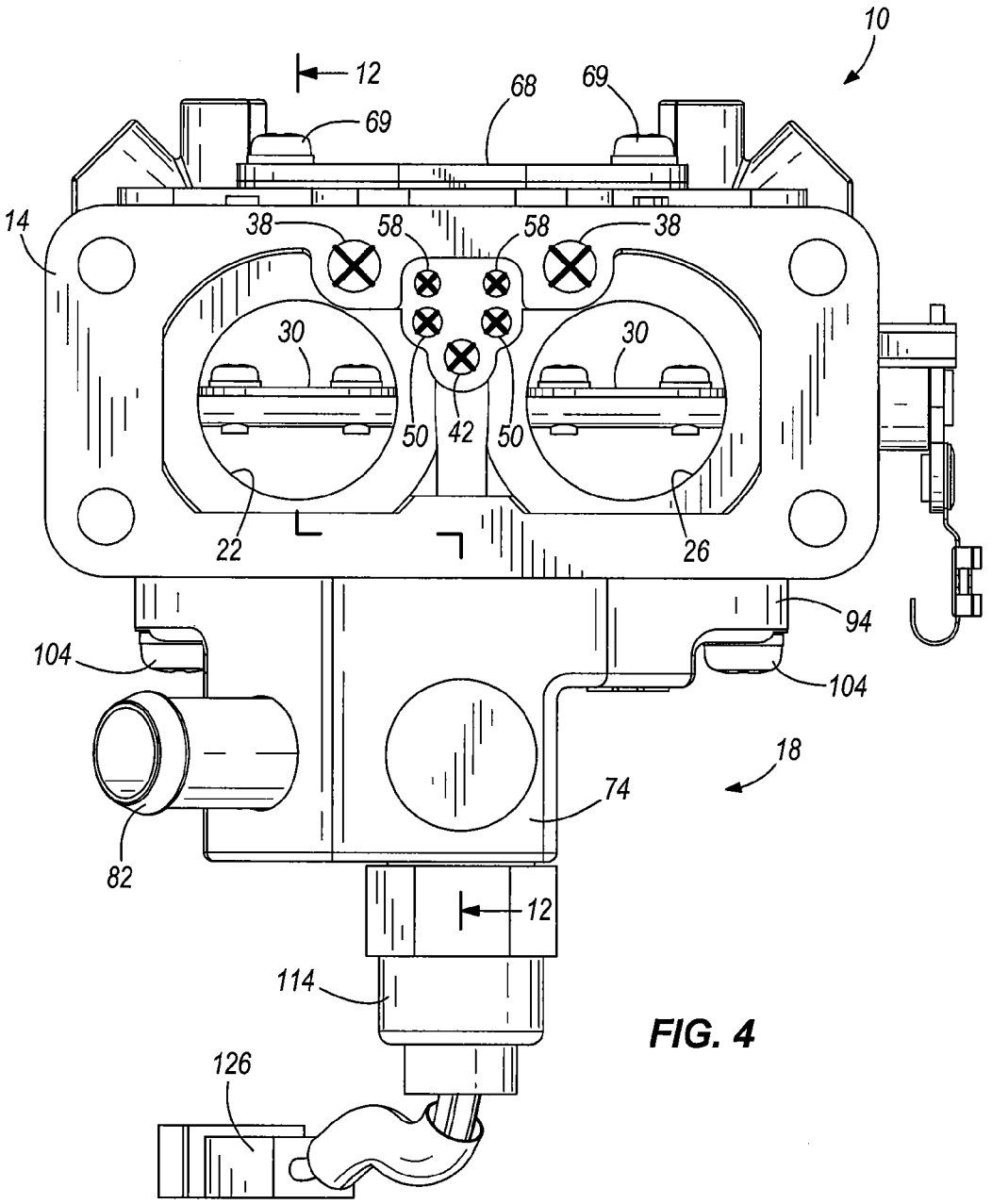
10
12
68
69
69
14
38
58
58
38
30
30
50
42
50
22
26
94
104
104
18
74
82
12
114
126

FIG. 4

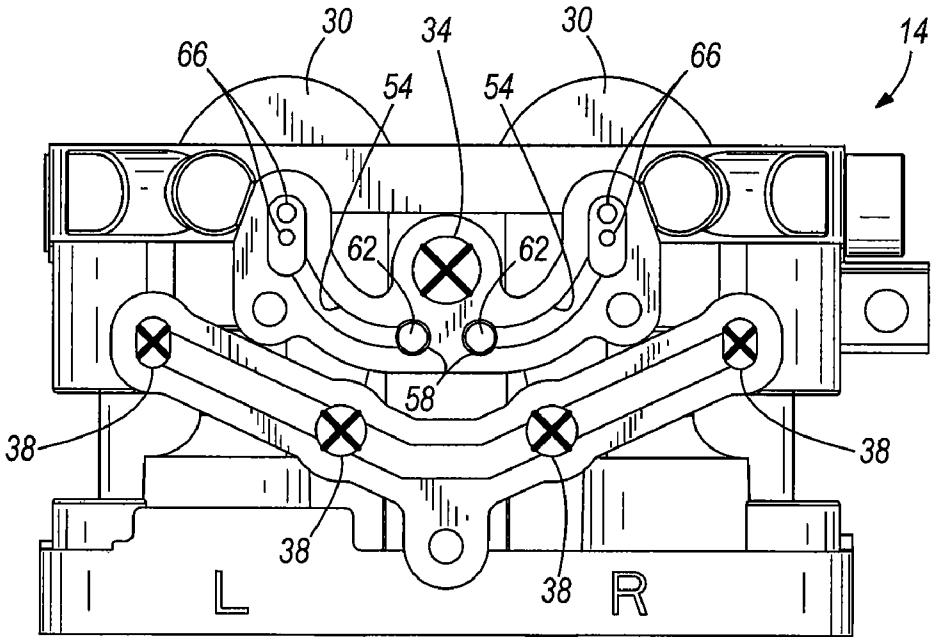
30
34
30
14
66
66
54
54
62
62
58
38
38
38
38
L
R

FIG. 5

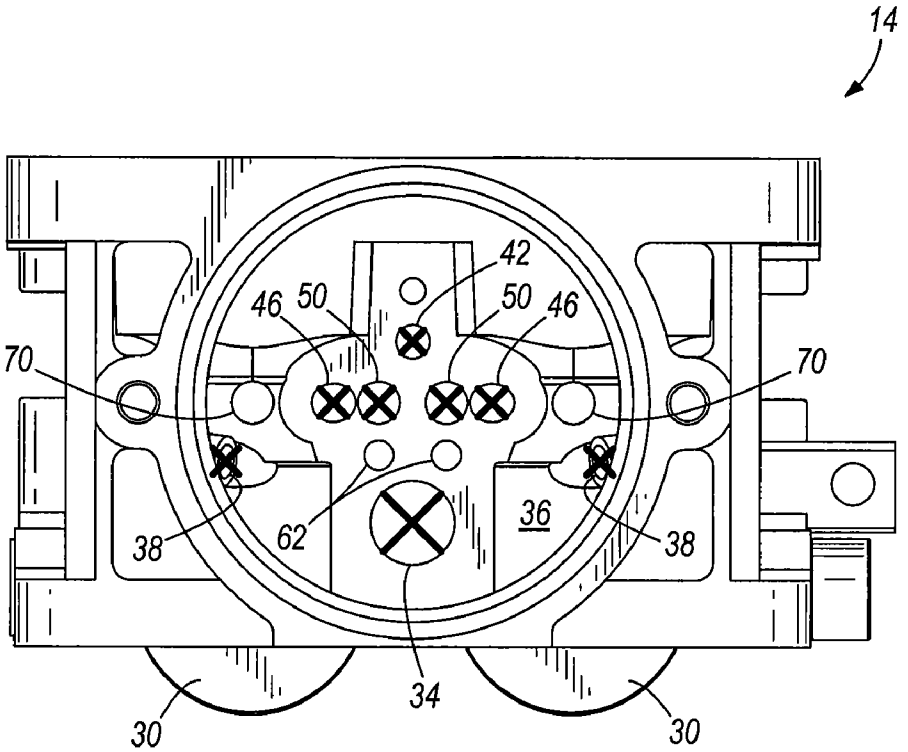
14
42
46
50
50
46
70
70
38
62
36
38
34
30
30

FIG. 6

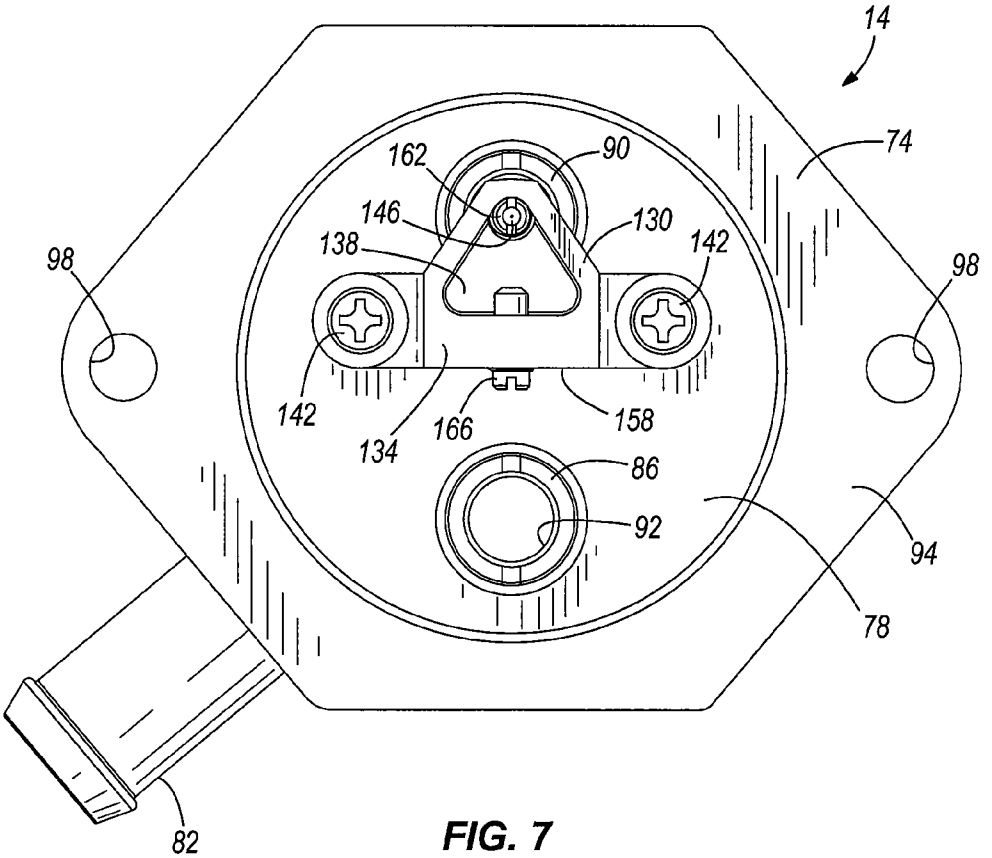


FIG. 7

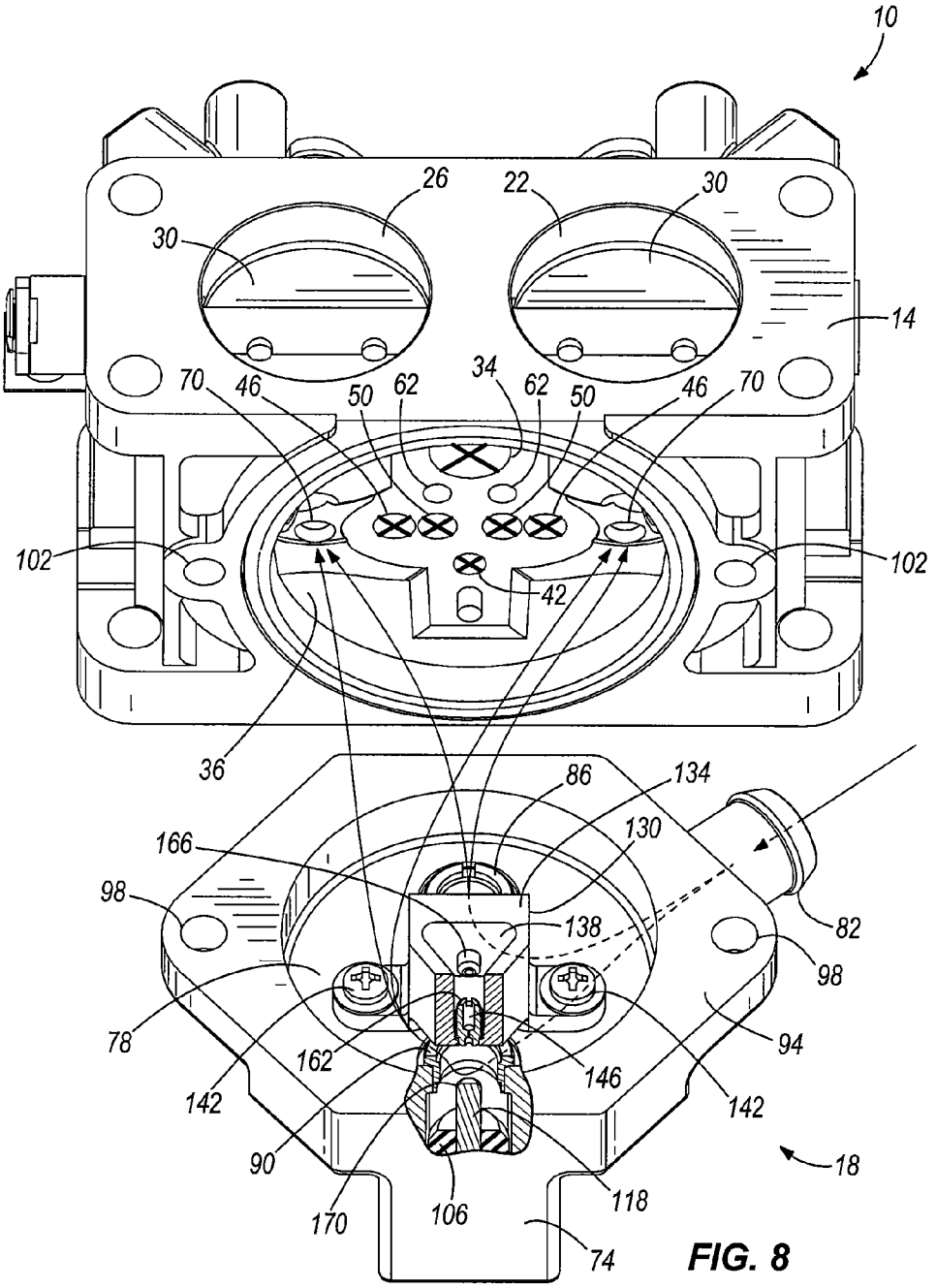
10
26
22
30
30
14
70
46
50
62
34
62
50
46
70
102
102
42
36
86
134
130
166
98
138
82
98
78
162
146
94
142
142
90
18
170
106
118
74

FIG. 8

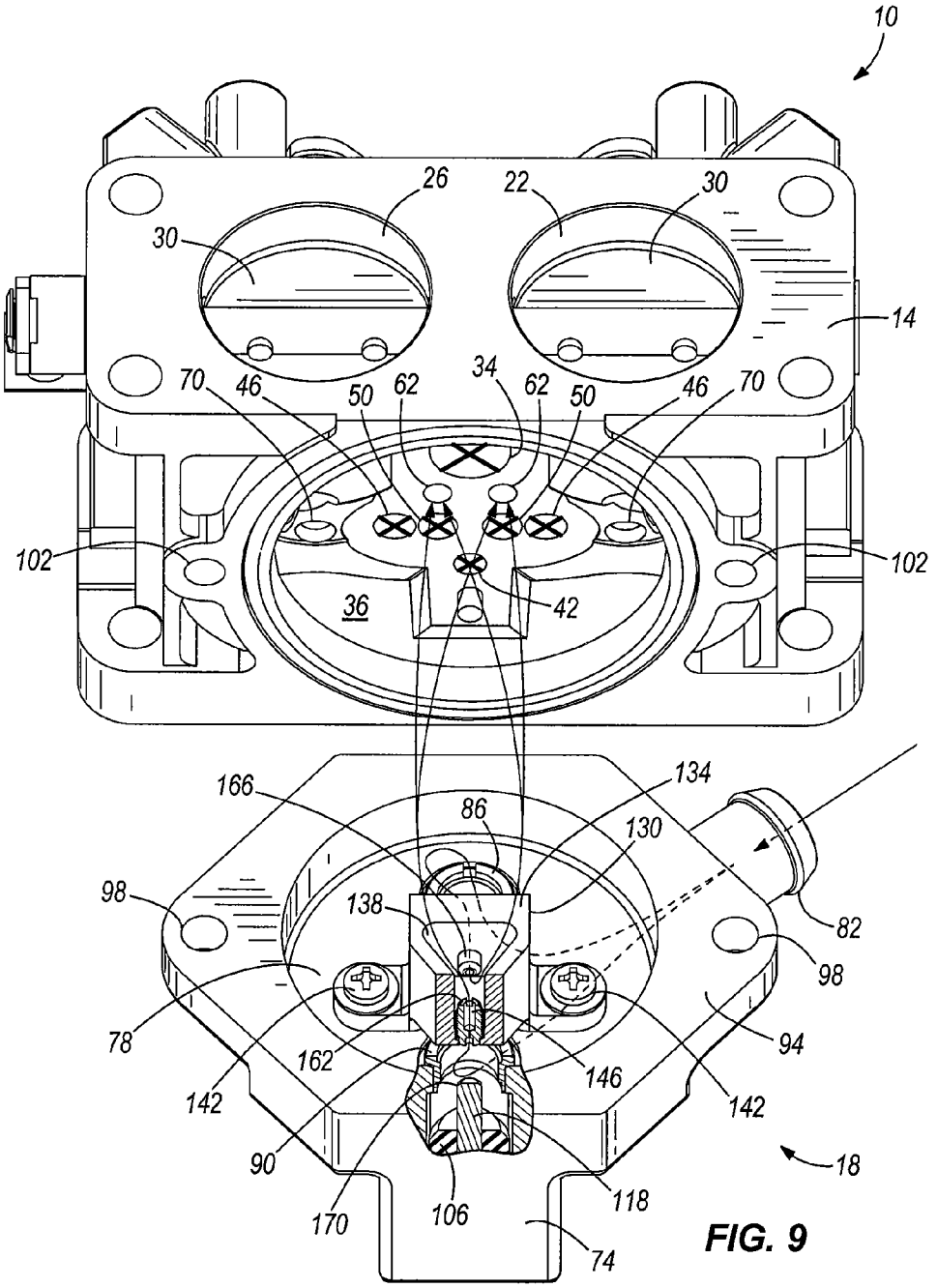
10
26
22
30
30
14
70
46
50
62
34
62
50
46
70
102
102
36
42
166
134
86
130
98
138
82
98
78
94
162
146
142
142
90
18
170
106
118
74

FIG. 9

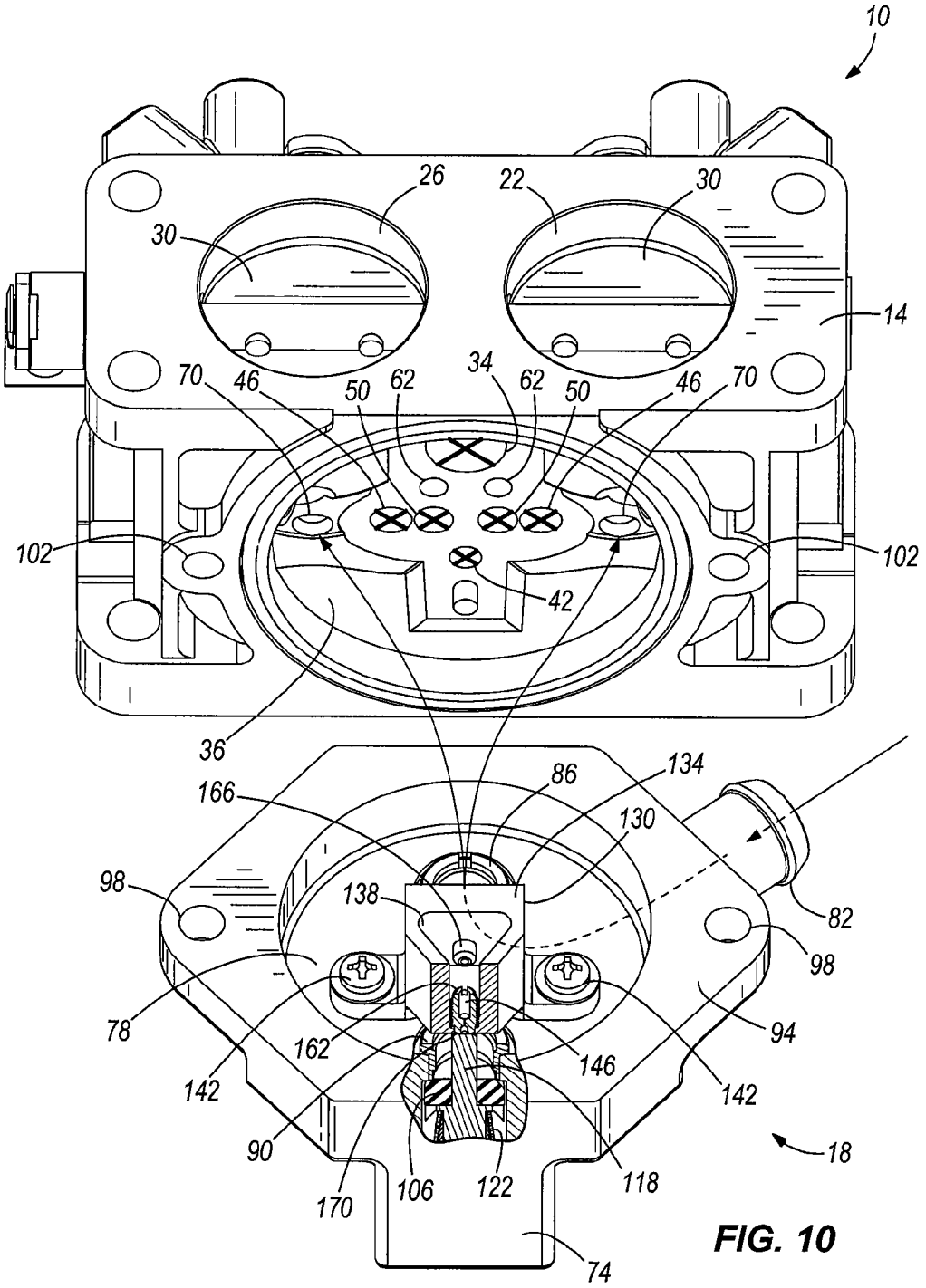
10
26
22
30
30
14
70
46
50
62
34
62
50
46
70
102
102
42
36
166
86
134
130
98
138
82
98
78
162
146
94
142
142
90
18
170
106
122
118
74

FIG. 10

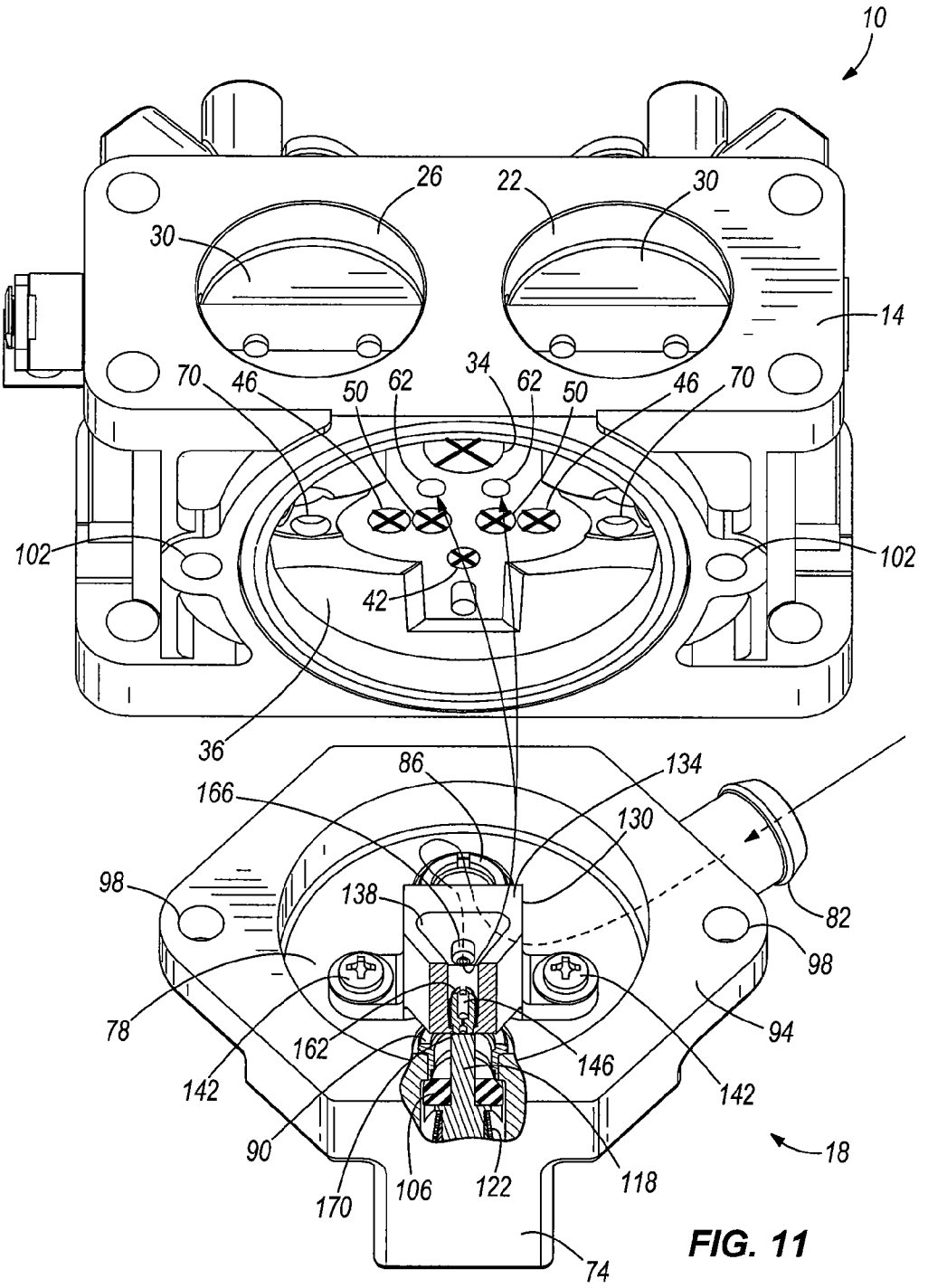
10
26
22
30
30
14
70
46
50
62
34
62
50
46
70
102
102
42
36
86
134
166
130
98
138
82
98
78
94
162
146
142
142
90
18
170
106
122
118
74

FIG. 11

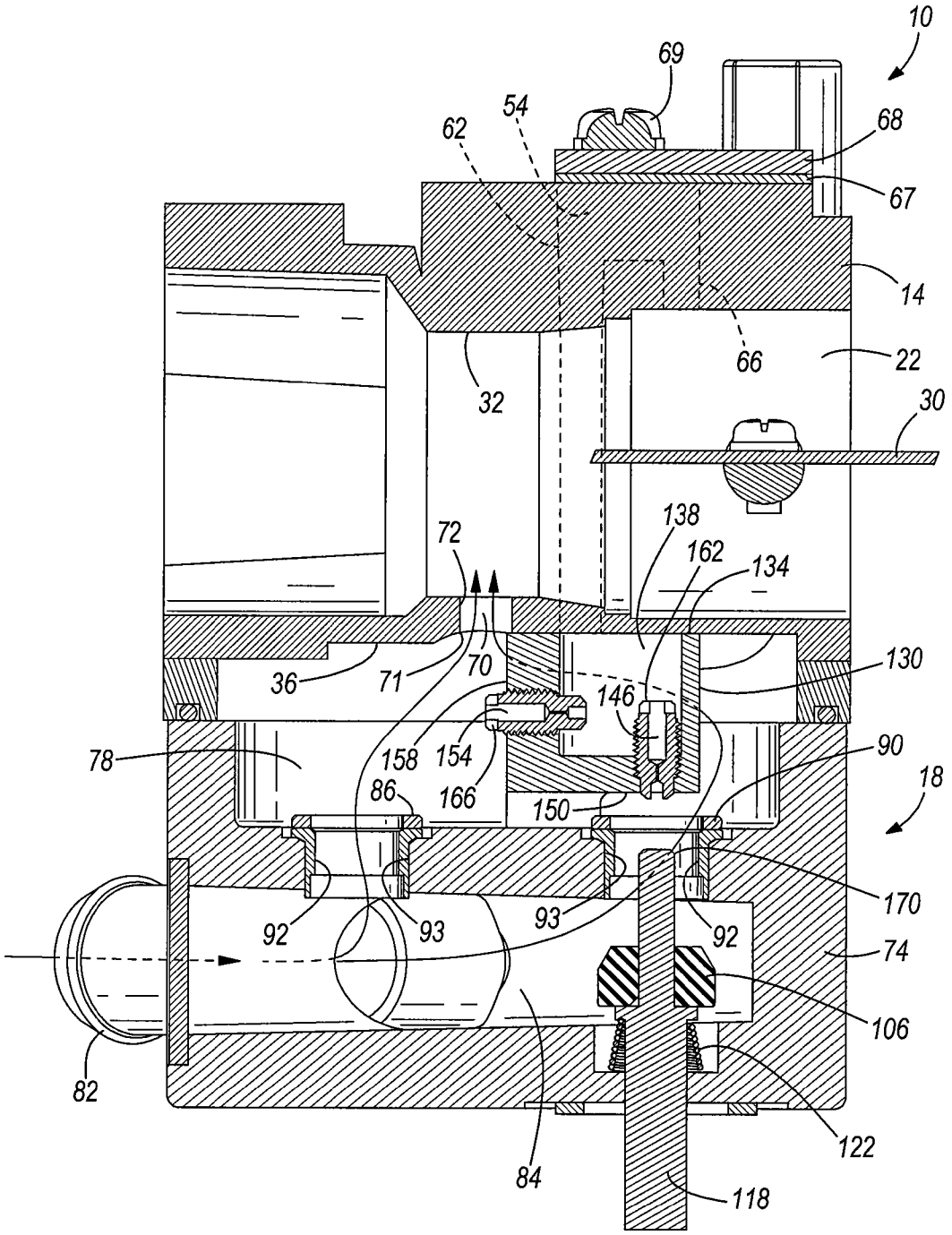
10
69
54
62
68
67
14
66
22
32
30
138
72
162
134
130
36
71
70
146
78
158
154
90
86
166
18
150
170
92
93
93
92
74
106
82
122
84
118

FIG. 12

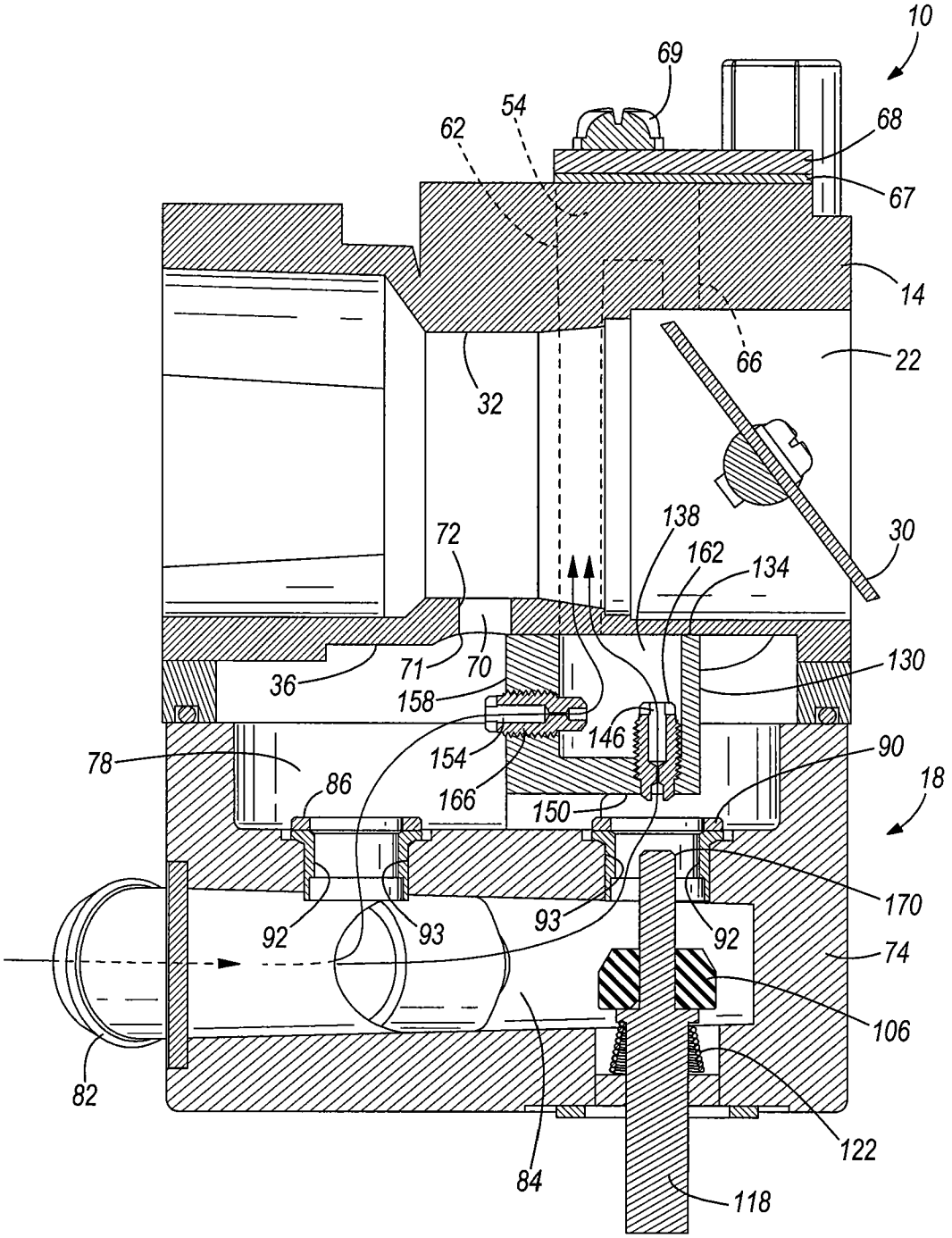
10
69
54
62
68
67
14
66
22
32
30
72
138
162
134
130
36
71
70
158
146
154
166
150
78
86
90
18
170
92
93
93
92
74
106
82
122
84
118

FIG. 13

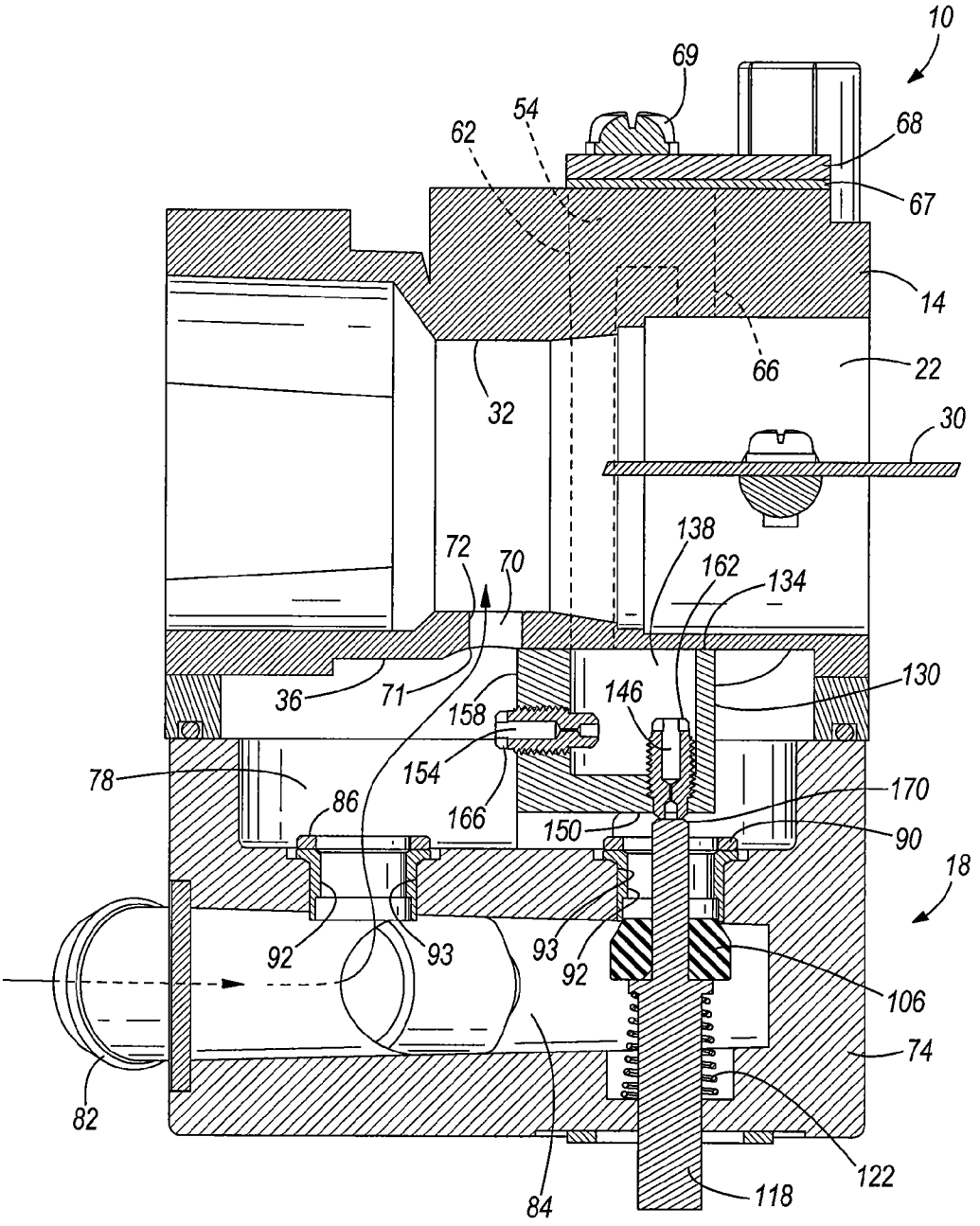
10
69
54
62
68
67
14
66
22
32
30
138
72
70
162
134
130
36
71
146
158
154
78
86
166
150
170
90
18
92
93
93
92
106
74
82
122
84
118

FIG. 14

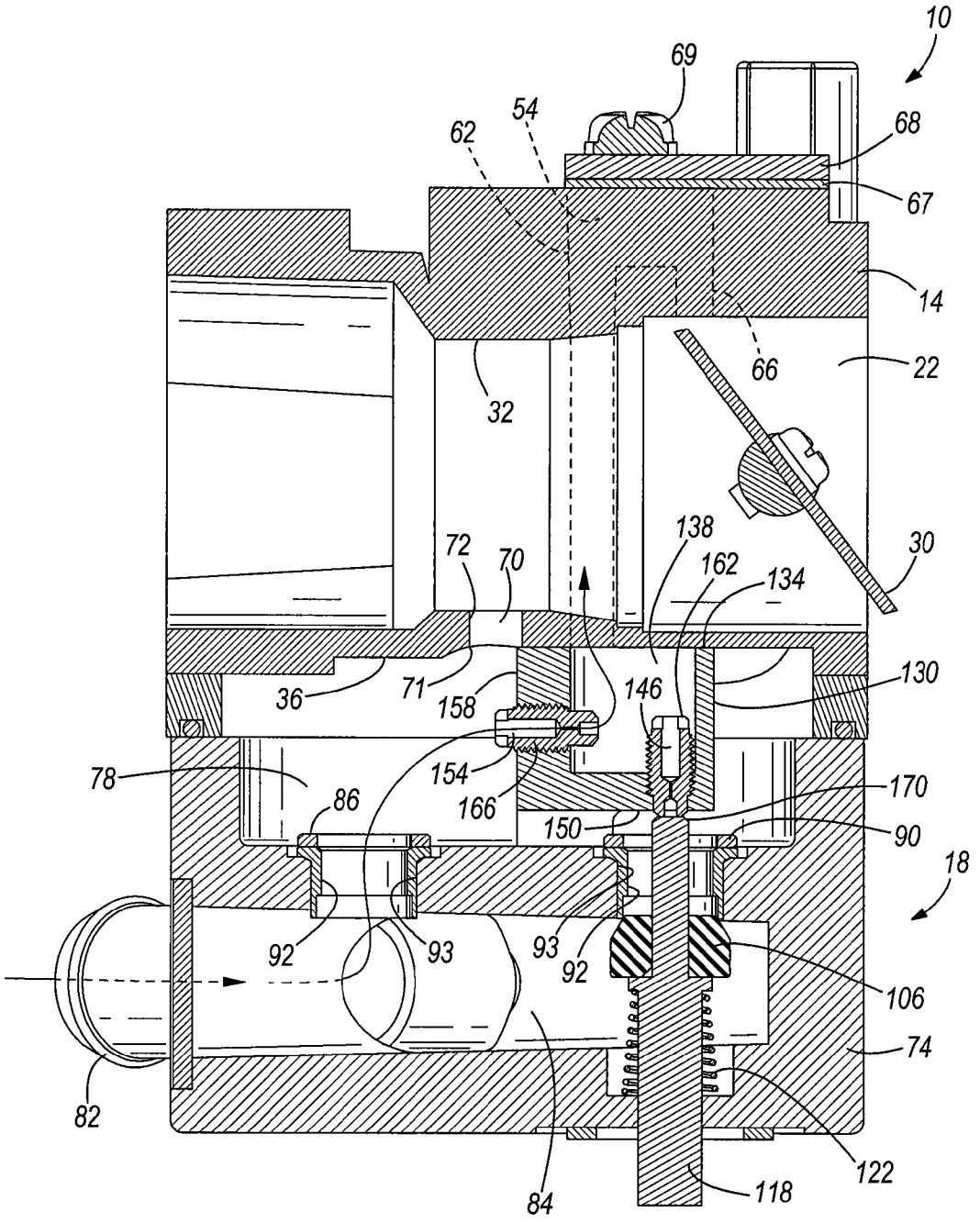
10
69
54
62
68
67
14
66
22
32
30
138
162
134
72
70
130
36
71
158
146
154
166
170
78
86
150
90
18
92
93
93
92
106
74
82
122
84
118

FIG. 15

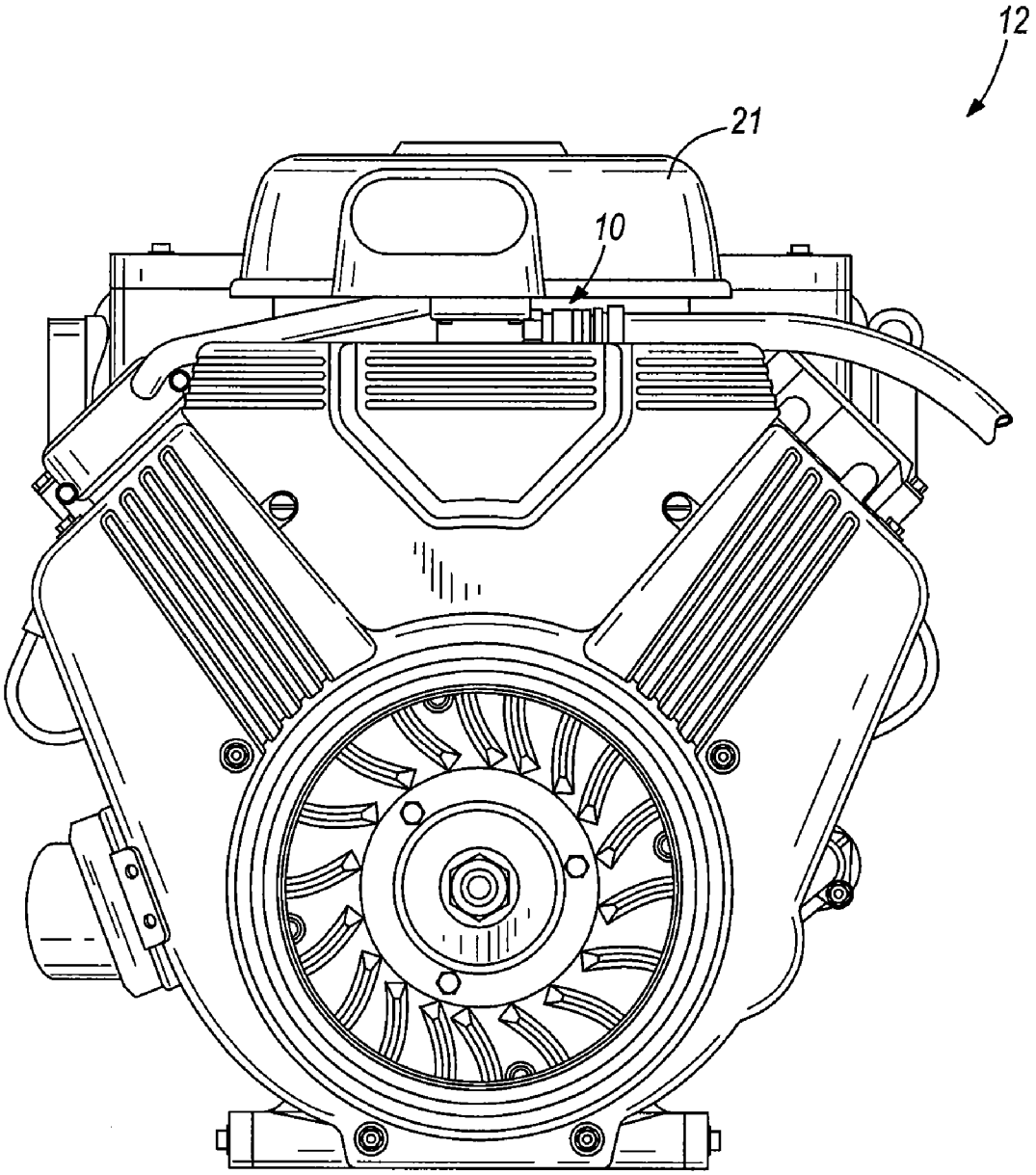


FIG. 16

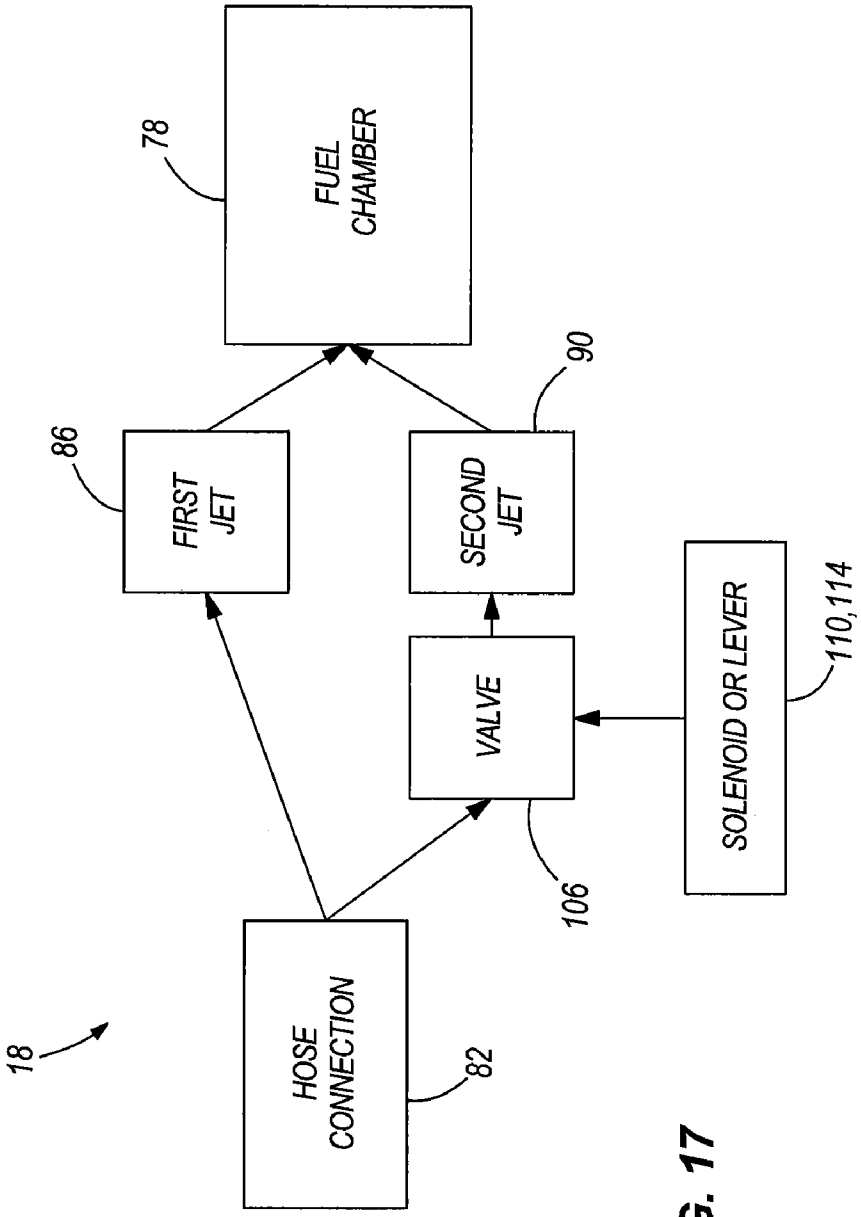
18
HOSE CONNECTION
82
FIRST JET
86
VALVE
106
SECOND JET
90
FUEL CHAMBER
78
SOLENOID OR LEVER
110,114

FIG. 17

# GASEOUS FUEL MIXING DEVICE

## RELATED APPLICATIONS

This application claims priority to U.S. Provisional Patent Application Ser. No. 60/931,843 filed on May 25, 2007, the entire content of which is incorporated herein by reference.

## BACKGROUND

The present invention relates to a mixing device for gaseous fuel. More particularly, the present invention relates to a gaseous fuel mixing device using a modified carburetor body.

Typically, a liquid fuel carburetor includes at least one air intake passageway having a venturi and a fuel bowl that is configured to temporarily store a supply of liquid fuel. The venturi is in communication with the fuel bowl such that, as air flows through the venturi, liquid fuel is drawn from the fuel bowl and into the intake passageway. The fuel mixes with the air to become a vapor and flows through the intake passageway or throat to a cylinder of an internal combustion engine. The vaporized fuel is combusted in the cylinder to drive the engine.

Due to governmental regulations on emissions from small engines, it has become more desirable to power internal combustion engines with gaseous fuels (e.g., liquid propane and natural gas). However, these engines do not require typical carburetors that are configured to deliver vaporized gasoline to the cylinder. Rather, these engines require mixing devices that are capable of mixing the fuel with air, and supplying the mixture to the engine.

## SUMMARY

The present invention provides, in one aspect, a mixing device for use with a gaseous fuel internal combustion engine. To reduce cost, the mixing device uses a modified, existing carburetor body and a gaseous fuel reservoir or intake unit. The modified carburetor body includes an air intake passageway, a throttle valve coupled for rotation in the intake passageway, and at least one passageway in communication between the intake unit and the intake passageway. The intake unit includes a fuel chamber, a first jet, and an optional second jet. The intake unit may also include a valve operable to selectively close the second jet for different gaseous fuels. In other embodiments, the mixing device may have one or two jets, or could be designed for use with a single fuel (LP or NG) and thus would not require a selector valve.

The present invention provides, in another aspect, a gaseous fuel mixing device including a body including an air/fuel passageway and a gaseous fuel passageway in fluid communication with the air/fuel passageway, a throttle valve pivotably coupled to the body and positioned in the air/fuel passageway, and an intake unit coupled to the body. The intake unit includes an inlet configured to be fluidly connected with a source of gaseous fuel, a first jet fluidly communicating the inlet and the gaseous fuel passageway, a second jet selectively fluidly communicating the inlet and the gaseous fuel passageway, and a selector valve operable to control a flow of gaseous fuel through the second jet.

The present invention provides, in yet another aspect, a gaseous fuel mixing device including a body having a first air/fuel passageway, a second air/fuel passageway, a first gaseous fuel passageway in fluid communication with the first air/fuel passageway, a second gaseous fuel passageway in fluid communication with the second air/fuel passageway, a first throttle valve pivotably coupled to the body and positioned in the first air/fuel passageway, a second throttle valve pivotably coupled to the body and positioned in the second air/fuel passageway, and an intake unit coupled to the body and in fluid communication with a source of gaseous fuel. Each of the first and second gaseous fuel passageways is configured to draw an amount of gaseous fuel, based upon individual demand of fuel through the respective first and second air/fuel passageways, from the intake unit.

The present invention provides, in a further aspect, a gaseous fuel mixing device including a modified carburetor body, originally configured for use with a liquid fuel, having an air/fuel passageway, a gaseous fuel passageway having an inlet in communication with an exterior of the body and an outlet in communication with the air/fuel passageway, a closed liquid fuel passageway, a throttle valve pivotably coupled to the carburetor body and positioned in the air/fuel passageway, and an intake unit coupled to the carburetor body. The intake unit is configured to deliver gaseous fuel to the gaseous fuel passageway in the carburetor body.

The present invention provides, in another aspect, a method of converting a carburetor from operating using a liquid fuel to operating using a gaseous fuel. The method includes providing a carburetor body including an air/fuel passageway, creating a gaseous fuel passageway through a portion of the body to fluidly communicate the gaseous fuel passageway with the air/fuel passageway, and closing a liquid fuel passageway in the body.

Other aspects of the invention will become apparent by consideration of the detailed description and accompanying drawings.

## BRIEF DESCRIPTION OF THE DRAWINGS

FIG. **1** is a front perspective view of a gaseous fuel mixing device including a modified carburetor body and an intake unit.

FIG. **2** is a rear perspective view of the gaseous fuel mixing device of FIG. **1**.

FIG. **3** is an exploded perspective view of the gaseous fuel mixing device of FIG. **1**.

FIG. **4** is a rear view of the gaseous fuel mixing device of FIG. **1**.

FIG. **5** is a top view of the gaseous fuel mixing device of FIG. **1**, with portions removed.

FIG. **6** is bottom view of the gaseous fuel mixing device of FIG. **1**, with the intake unit removed.

FIG. **7** is a top view of the intake unit of the gaseous fuel mixing device of FIG. **1**.

FIG. **8** is a perspective view illustrating the modified carburetor body separated from the intake unit of FIG. **1**, illustrating the mixing device operating in a first condition with a first type of fuel.

FIG. **9** is a perspective view illustrating the modified carburetor body separated from the intake unit of FIG. **1**, illustrating the mixing device operating in a second condition with the first type of fuel.

FIG. **10** is a perspective view illustrating the modified carburetor body separated from the intake unit of FIG. **1**, illustrating the mixing device operating in the first condition with a second type of fuel.

FIG. **11** is a perspective view illustrating the modified carburetor body separated from the intake unit of FIG. **1**, illustrating the mixing device operating in the second condition with the second type of fuel.

FIG. **12** is a cross-sectional view of the gaseous fuel mixing device of FIG. **1**, along line **12-12** in FIG. **4**, illustrating the mixing device operating in the first condition with the first type of fuel.

FIG. **13** is a cross-sectional view of the gaseous fuel mixing device of FIG. **1**, along the same line **12-12** in FIG. **4**, illustrating the mixing device operating in the second condition with the first type of fuel.

FIG. **14** is a cross-sectional view of the gaseous fuel mixing device of FIG. **1**, along the same line **12-12** in FIG. **4**, illustrating the mixing device operating in the first condition with the second type of fuel.

FIG. **15** is a cross-sectional view of the gaseous fuel mixing device of FIG. **1**, along the same line **12-12** in FIG. **4**, illustrating the mixing device operating in the second condition with the second type of fuel.

FIG. **16** is a front view of an engine incorporating the gaseous fuel mixing device of FIG. **1**.

FIG. **17** is a schematic of the intake unit of FIG. **1** including a fuel selector valve.

## DETAILED DESCRIPTION

Before any embodiments of the invention are explained in detail, it is to be understood that the invention is not limited in its application to the details of construction and the arrangement of components set forth in the following description or illustrated in the following drawings. The invention is capable of other embodiments and of being practiced or of being carried out in various ways. Also, it is to be understood that the phraseology and terminology used herein are for the purpose of description and should not be regarded as limiting. The use of "including," "comprising," or "having" and variations thereof herein is meant to encompass the items listed thereafter and equivalents thereof as well as additional items. Unless specified or limited otherwise, the terms "mounted," "connected," "supported," and "coupled" and variations thereof are used broadly and encompass both direct and indirect mountings, connections, supports, and couplings. Further, "connected" and "coupled" are not restricted to physical or mechanical connections or couplings.

FIGS. **1-3** illustrate a mixing device **10** that includes a modified carburetor body **14** and a reservoir or intake unit **18**. In the illustrated embodiment, the mixing device **10** is configured for use with a two-cylinder, horizontal shaft engine **12**, and may be disposed beneath a removable cover **21** of the engine **12** (see FIG. **16**). Alternatively, the mixing device **10** may be utilized with a vertical shaft engine. The engine **12** is powered by a gaseous fuel such as, for example, liquid propane (LP) or natural gas (NG). In some embodiments, the gaseous fuel engine **12** may be used in a standby generator. In other embodiments, the gaseous fuel engine **12** may be used in other suitable gaseous fuel applications, such as a lawnmower. Additionally, the mixing device **10** may be configured for use with a different number of cylinders, such as a single cylinder engine.

In some embodiments, a first regulator (not shown) may be positioned upstream of the mixing device **10** to regulate the pressure of the gaseous fuel entering the mixing device **10**. In one embodiment, the first regulator may be positioned near an LP tank or a NG source to reduce the relatively high pressure of the gaseous fuel prior to the gaseous fuel flowing into the intake unit **18**. For example, the first regulator may be configured to facilitate altering the fuel from a high-pressure liquid state to a lower-pressure gaseous state. Additionally or alternatively, a second regulator (not shown) may be positioned on or adjacent the engine **12** to reduce the pressure of the gaseous fuel as it enters the mixing device **10**.

As shown in FIGS. **1-3**, the carburetor body **14** is from an existing V-twin carburetor, originally configured for use with a liquid fuel (e.g., gasoline), that is modified for use with a gaseous fuel. For example, the carburetor body **14** may be modified by closing off (e.g., blocking, plugging, etc.) unneeded passageways, removing a fuel bowl and float (not shown), and adding an input/chamber component (e.g., the intake unit **18**) in place of the fuel bowl for use with the gaseous fuel mixing device **10**.

With reference to FIG. **1**, the carburetor body **14** includes a first air/fuel or intake passageway **22**, a second air/fuel or intake passageway **26**, and respective throttle plates or valves **30** pivotably coupled for rotation in the intake passageways **22**, **26**. The intake passageways **22**, **26** are in communication with an external air source and the intake unit **18** to provide the gaseous fuel to corresponding cylinders of the engine **12**. The throttle valves **30** are responsive to actuation by an engine governor or are manually actuated by a user, and rotate between an opened and a closed position to adjust the amount of gaseous fuel supplied to the engine **12** in accordance with the engine speed or the applied load.

In the illustrated embodiment, the gaseous fuel is drawn into the intake passageways **22**, **26** by a vacuum pulse generated as air flows through a venturi **32** (i.e., the smaller diameter portion) of the intake passageways **22**, **26** (see FIGS. **12-15**). When the engine **12** requires more fuel, the throttle valves **30** rotate toward an open position to allow more air to flow through the intake passageways **22**, **26**, creating a larger vacuum pulse and drawing more fuel into the intake passageways **22**, **26**. When the engine **12** requires less fuel, the throttle valves **30** rotate toward a closed position to restrict the air flow through the intake passageways **22**, **26**, creating a smaller vacuum pulse and drawing less fuel into the intake passageways **22**, **26**.

The original, unmodified carburetor body also includes various passageways for air and/or fuel flow. In the illustrated embodiment, some of the passageways have been blocked off or plugged such that the carburetor body **14** is suitably modified for use with a gaseous fuel. In the figures, passageways that have been blocked are generally indicated by an "X". The passageways and holes may be plugged with epoxy or plugs, by removing corresponding core pins in the die used to form the original carburetor body, or by eliminating a machining process for the carburetor body.

Prior to modification, the carburetor body includes a main liquid (e.g., gasoline) fuel passageway or inlet **34** exposed to an exterior surface **36** of the carburetor body **14**, and internal vents **38** (see FIG. **6**). The main gasoline fuel inlet **34** supplies gasoline to the fuel bowl in a gasoline engine. The main gasoline fuel inlet **34** is initially defined by a core pin in the die for the carburetor body and then machined (e.g., drilled) once the carburetor body is removed from the die. In the illustrated embodiment, the main gasoline fuel inlet **34** is plugged (e.g., by using an epoxy, etc.) because the gaseous fuel engine does not require gasoline for operation.

The internal vents **38** vent the airspace above the liquid fuel in the original carburetor fuel bowl. The internal vents **38** are formed such that one end (FIG. **4**) is downstream of an air cleaner/filter and the other end (FIG. **6**) is in the airspace above the fuel in the fuel bowl. In some embodiments, the original carburetor body also includes a provision **42** for an additional or alternative internal vent. The provision **42** may be completely drilled through for use in lieu of the internal vents **38**. However, in the illustrated embodiment, no fuel bowl is present and thus the internal vents **38** are not needed.

Therefore, both the existing internal vents **38** and the provision **42** for an internal vent are blocked off in the modified carburetor body **14**.

In addition, prior to modification, the carburetor body includes nozzles extending into the first and second intake passageways **22**, **26** and emulsion tubes extending into the fuel bowl. In an unmodified carburetor, the nozzles are positioned within corresponding nozzle passageways **46** and are typically made of brass. The nozzles carry fuel between the fuel bowl and the intake passageways **22**, **26** to supply the fuel during operation of the engine. In the illustrated embodiment of the modified carburetor body **14**, the nozzles are removed and the nozzle passageways **46** are plugged. In some embodiments, the nozzle passageways **46** remain unplugged, but are recalibrated (e.g., resized) for use with gaseous fuels.

The emulsion tubes are made of brass and extend from corresponding emulsion passageways **50** positioned between the intake passageways **22**, **26** (FIG. **4**). In a standard liquid fuel carburetor, air enters the emulsion tubes and mixes with the liquid fuel. The mixture of fuel and air is then drawn through the nozzles and into the intake passageways **22**, **26**. In the modified carburetor body **14** used with the present invention, the emulsion tubes are removed and the emulsion passageways **50** are plugged because the fuel used with the illustrated modified carburetor body **14** is already a gas and does not require additional air to reach a gaseous state.

As shown in FIG. **5**, the original carburetor body also includes mixing chambers **54**, or progression slots or holes, for use at idle speeds. The mixing chambers **54** communicate with air bleed inlets **58**, fuel bleed inlets **62** (FIG. **6**), and idle holes or slots **66**. In a typical carburetor, the air bleed inlets **58** provide entry points for air to enter the mixing chambers **54** and break up (i.e., vaporize) fuel entering the mixing chambers **54** through the fuel bleed inlets **62**. This relatively small mixture of air and fuel then enters the first and second intake passageways **22**, **26** through the corresponding idle holes or slots **66** so that the engine continues to run at idle speeds. In the illustrated embodiment of the modified carburetor body **14**, the fuel bleed inlets **62** are recalibrated and the air bleed inlets **58** are blocked (see FIG. **4**) because the gaseous fuel does not require additional air. In addition, the idle holes **66** are recalibrated for use with the gaseous fuel. In some embodiments, the mixing chambers **54** are entirely or partially filled such that only a small, direct passageway exists between the fuel bleed inlets **62** and the idle holes **66**.

As shown in FIG. **3**, the mixing device **10** includes a gasket **67** and a plate **68** coupled to the carburetor body **14** to seal the gasket **67** against the carburetor body **14**. Specifically, the gasket **67** and plate **68** are positioned over the mixing chambers **54** to substantially prevent entry of additional air into the mixing chambers **54**. In the illustrated construction of the mixing device **10**, fasteners (e.g., screws **69**, etc.) are utilized to couple the plate **68** to the carburetor body **14**. Alternatively, the plate **68** may be coupled to the carburetor body **14** in any of a number of different ways (e.g., by welding, brazing, by using adhesives, etc.).

Referring to FIG. **6**, gaseous fuel passageways or apertures **70** are machined (e.g., drilled or bored) near an outer periphery of the carburetor body **14** during the process of modifying the carburetor body **14**. The apertures **70** include respective inlets **71**, each exposed to the exterior surface **36** of the carburetor body **14**, and respective outlets **72** exposed to the respective intake passageways **22**, **26**. The apertures **70** are appropriately sized to allow gaseous fuel to flow from the intake unit **18** and into the intake passageways **22**, **26**. The apertures **70** replace the flow passageway previously provided by the nozzle passageways **46**. As discussed above, in some embodiments, the apertures **70** may be omitted and the nozzle passageways **46** may be recalibrated for use with gaseous fuels.

As shown in FIG. **3**, the intake unit **18** includes a housing **74**, a gaseous fuel chamber **78** at least partially defined in the housing **74**, a hose connection **82** extending from the housing **74** at least partially defining a gaseous fuel inlet **84** in the housing **74** (see FIGS. **12-15**), a first jet **86** fluidly communicating the inlet **84** and the fuel chamber **78**, and a second jet **90** fluidly communicating the inlet **84** and the fuel chamber **78**. In the illustrated construction of the intake unit **18**, each of the jets **86**, **90** is a separate and distinct component from the housing **74**. Specifically, each of the jets **86**, **90** is generally tubular (see FIGS. **12-15**) and includes an orifice **92** calibrated for use with different gaseous fuels (e.g., NG or LP). In addition, the jets **86**, **90** are made from metal (e.g., brass), and are press-fit within respective apertures **93** in the housing **74**. Alternatively, the jets **86**, **90** may be omitted, and the respective apertures **93** in the housing **74** may be sized according to the orifices **92** in the jets **86**, **90** to provide a calibrated flow of gaseous fuel from the inlet **84** to the fuel chamber **78**. As a further alternative, the fuel chamber **78** may be omitted from the intake unit **18**, such that gaseous fuel is delivered to the carburetor body **14** via conduits interconnecting the carburetor body **14** and the respective jets **86**, **90**.

As shown in FIG. **3**, the intake unit **18** also includes a flange **94** having apertures **98** configured to align with corresponding apertures **102** in the carburetor body **14** (see FIG. **6**). Fasteners (e.g., a screw **104**, a bolt, etc.) are utilized to couple the intake unit **18** to the carburetor body **14**. In the illustrated embodiment, the intake unit **18** is machined or cast from aluminum. In other embodiments, the intake unit **18** may be composed of another suitable material or combination of materials such as, for example, plastic, steel, ceramic, or the like. In the illustrated embodiment, the fuel chamber **78** is a reservoir to temporarily hold a supply of gaseous fuel.

With reference to FIG. **3**, the hose connection **82** extends from the intake unit **18** and is configured to communicate with a LP supply or NG supply. In some embodiments, the hose connection **82** may include threads, barbs or a quick-connect/disconnect coupler to facilitate coupling with the gaseous fuel source. In the illustrated embodiment, the hose connection **82** is a separate piece that is threaded, welded, press-fit, brazed, or cast, or otherwise attached to the housing **74**. In other embodiments, the hose connection **82** may be formed or machined as a single component with the housing **74**.

With continued reference to FIG. **3**, the first and second jets **86**, **90** are positioned within the fuel chamber **78** to allow gaseous fuel entering the intake unit **18** through the hose connection **82** to be temporarily stored within the fuel chamber **78**. In NG applications, both jets **86**, **90** are configured to be open and supply NG to the fuel chamber **78**. In LP applications, only one jet (e.g., the first jet **86**) is configured to be open and supply LP to the fuel chamber **78**. The jets **86**, **90** may include different sized orifices **92**, and are calibrated such that the jet **86** used to supply LP supplies the correct amount for optimal efficiency and performance.

With reference to FIG. **3**, the intake unit **18** includes a selector valve **106** to selectively close one of the jets (e.g., the second jet **90**). As shown schematically in FIG. **17**, a solenoid or lever **110** is coupled to the valve **106** to actuate the valve **106**. As such, the valve **106** may be automatically or manually operated to switch between NG and LP applications. Alternatively, the valve **106** may be set at an open or closed position during manufacture of the intake unit **18**. Alternatively, one of the jets (e.g., jet **90**) and the selector valve **106** could be

eliminated if the mixing device **10** is designed to be used with a single type of fuel (e.g., LP).

In the illustrated construction of the intake unit **18**, a solenoid **114** is utilized to move the valve **106** relative to the jet **90** to control the flow of gaseous fuel from the inlet **84** to the fuel chamber **78** via the jet **90** (see FIG. **3**). The solenoid **114** includes a plunger **118** upon which the valve **106** is supported, and a biasing member (e.g., a compression spring **122**) biasing the plunger **118** and valve **106** toward the jet **90**. In operation of the intake unit **18**, as will be discussed in greater detail below, the solenoid **114** is energized to move the plunger **118** and the valve **106** away from the jet **90**, against the bias of the spring **122**, to substantially open the jet **90** (see FIGS. **12** and **13**). Alternatively, the solenoid **114** may be configured such that the valve **106** is biased away from the jet **90**, and energizing the solenoid **114** moves the plunger **118** and the valve **106** toward the jet **90**, against the bias of a tension spring, to substantially close the jet **90**.

With reference to FIGS. **1-3**, the solenoid **114** includes a wiring harness **126** configured to be selectively connected to a source of electricity. An individual installing, for example, a household electrical generator incorporating the engine **12**, need only connect the wiring harness **126** to a battery or other source of electricity (e.g., the electricity generated by an engine alternator or the generator itself) to configure the engine **12** for operation with NG to maintain the valve **106** displaced or unseated from the jet **90**. Of course, the engine **12** must also be connected to the source of NG. Likewise, the individual need only leave the wiring harness **126** unplugged to configure the engine **12** for operation with LP (in addition to connecting the engine **12** to the source of LP). As a result, the spring **122** biases the valve **106** against the jet **90** to substantially close the jet **90**. Incorporating the solenoid **114** and valve **106** with the intake unit **18** allows the mixing device **10** to be packaged on the engine **12** beneath one or more shrouds or housings (e.g., cover **21**; see FIG. **16**), where it might otherwise be difficult to gain access to change or otherwise modify the structure of the intake unit **18** at the installation site to adapt the engine **12** to operate using either a NG fuel source or a LP fuel source.

With reference to FIG. **3**, an idle jet housing **130** is positioned between the intake unit **18** and the carburetor body **14**. The idle jet housing **130** includes an upper surface **134** that, when the intake unit **18** is coupled to the carburetor body **14**, engages the exterior surface **36** of the carburetor body **14** to define a gaseous fuel sub-chamber **138** within the fuel chamber **78**. In the illustrated construction, the idle jet housing **130** is a separate and distinct component from the intake unit **18**, and is coupled to the intake unit **18** via a plurality of fasteners (e.g., screws **142**, etc.). Alternatively, the idle jet housing **130** may be coupled to the intake unit **18** in any of a number of different ways (e.g., by welding, brazing, by using adhesives, etc.). As a further alternative, the idle jet housing **130** may be integrally formed as a single piece with the housing **74** of the intake unit **18**.

With reference to FIGS. **9** and **13**, the idle jet housing **130** substantially surrounds the fuel bleed inlets **62**, such that the fuel bleed inlets **62** are not directly exposed to the fuel chamber **78**, but instead are directly exposed to the sub-chamber **138** in the idle jet housing **130**. With continued reference to FIG. **13**, the idle jet housing **130** includes an orifice **146** in a bottom surface **150** of the idle jet housing **130** in facing relationship with the jet **90**, and another orifice **154** in a side surface **158** of the idle jet housing **130**. As a result, gaseous fuel in the fuel chamber **78** must pass through the respective orifices **146**, **154** to enter the sub-chamber **138** and the fuel bleed inlets **62**. The orifices **146**, **154** may be calibrated to meter different amounts of gaseous fuel into the sub-chamber **138** (e.g., by having different diameters). Further, each of the orifices **146**, **154** includes a diameter, and therefore a cross-sectional area, less than that of the orifices **92** defined by the jets **86**, **90**. In the illustrated construction of the idle jet housing **130**, each of the orifices **146**, **154** is defined by a respective jet **162**, **166** coupled to the idle jet housing **130**. Specifically, each of the jets **162**, **166** is a separate and distinct component from the idle jet housing **130**, and is threadably connected to the idle jet housing **130**. Alternatively, the jets **162**, **166** may be omitted, and each of the orifices **146**, **154** may be defined by respective apertures created in the idle jet housing **130**.

With reference to FIGS. **7** and **9**, the jet **162** is substantially coaxial with the jet **90** in the intake unit **18**. In operation of the intake unit **18**, as will be discussed in greater detail below, a tip **170** of the plunger **118** is engageable with the jet **162** to substantially close the jet **162** at about the same time that the jet **90** is closed by the valve **106** (see FIGS. **14** and **15**). The plunger tip **170** may include any of a number of different shapes (e.g., a tapered shape) to facilitate sealing the plunger tip **170** against the jet **162** to substantially prevent flow of gaseous fuel through the jet **162** and into the sub-chamber **138**.

In operation of the engine **12**, a user rotates the throttle valves **30** relative to the intake passageways **22**, **26** (e.g., by pushing a pedal, pulling a lever, etc.), or the engine governor automatically positions the throttle valves **30** to adjust the air flow through the intake passageways **22**, **26**. When the throttle valves **30** are substantially parallel to the direction of air flow in the intake passageways **22**, **26** (as shown in FIGS. **12** and **14**), the greatest amount of air flows through the intake passageways **22**, **26**. As the air flows through the intake passageways **22**, **26**, the flow is slightly reduced at the venturis **32**. At normal operating speeds, this creates a vacuum pulse that is capable of drawing gaseous fuel from the intake unit **18** into the intake passageways **22**, **26** via the respective passageways or apertures **70**. The gaseous fuel mixes and flows with the air toward the first and second cylinders of the engine **12** where it is combusted to power the engine **12**.

FIGS. **8** and **12** illustrate the mixing device **10** operating in a main or normal running circuit. The main circuit is used when the engine **12** is in a normal operating condition (e.g., full throttle), and not simply running at an idle speed. The mixing device **10** operates according to this main circuit when the vacuum pulses in the modified carburetor body **14** are sufficiently strong to draw gaseous fuel through the apertures **70** in fluid flow communication with the fuel chamber **78**.

While operating according to the main circuit, gaseous fuel flows through the hose connection **82**, through the first and/or second jets **86**, **90**, and into the fuel chamber **78** of the intake unit **18**. The gaseous fuel in the fuel chamber **78** is drawn through the large apertures **70** and into the corresponding intake passageways **22**, **26** (see FIG. **12**). From the intake passageways **22**, **26**, the gaseous fuel flows to the respective cylinders of the engine **12** for combustion, based upon the magnitude of the respective individual vacuum pulses generated by each cylinder during the intake stroke of the engine. If the individual vacuum pulses in the intake passageways **22**, **26** differ, different amounts of gaseous fuel are drawn from the intake unit **18** into the respective passageways **22**, **26** to suit the individual fuel demand for each of the cylinders in the engine **12**. In the illustrated embodiment, the valve **106** is open such that the gaseous fuel flows through both jets **86**, **90**. Such a configuration is desirable for NG applications. In other embodiments, the valve **106** may be closed such that the gaseous fuel can only flow through the first jet **86** (see FIG.

14). Such a configuration is desirable for LP applications. For single fuel applications, the valve **106** may be omitted.

FIGS. **9** and **13** illustrate the mixing device **10** operating in an idle or slow circuit, in which the throttle valves **30** are substantially closed. The idle circuit is used when the vacuum pulses in the modified carburetor body **14** and mixing device **10** are not strong enough to draw gaseous fuel through the apertures **70**, but instead draw the gaseous fuel through the fuel bleed inlets **62**. While the engine **12** is using the idle circuit at idle speed, the individual vacuum pulses in the mixing device **10** draw the gaseous fuel through the smaller fuel bleed inlets **62** in a sufficient quantity to keep the engine **12** running at an idle speed. When the idle circuit is in use, the gaseous fuel in the fuel passageway **78** flows through the jets **162**, **166**, into the sub-chamber **138**, through the fuel bleed inlets **62**, through the mixing chambers **54** and idle holes **66**, and into the intake passageways **22**, **26** (see FIG. **13**). In the illustrated embodiment, the solenoid **114** is energized to maintain the valve **106** in a position spaced from the jet **90** such that both jets **86**, **90** supply gaseous fuel to the fuel chamber **78**, which, as discussed above, is desirable for NG applications. In other embodiments, the solenoid **114** may be de-energized to allow the valve **106** to seat against and close the jet **90**, and allow the plunger tip **170** to seat against and close the jet **162** in the idle jet housing **130**, such that the gaseous fuel only flows through the first jet **86** and the jet **166** in the idle jet housing **130**, which is desirable for LP applications (see FIG. **15**). For single fuel applications, the valve **106** may be omitted.

The mixing device **10** provides a low-cost structure and method to modify an existing carburetor body for use with a gaseous fuel. More particularly, unneeded passageways in the existing carburetor body may be quickly, inexpensively, and easily blocked without requiring a new mixing device body to be designed and tooled from scratch. In addition, the existing carburetor body may be fitted with a low-cost, easy to manufacture intake unit to further minimize costs. Gaseous fuel engines may, thereby, become more available while minimizing additional costs that are generated when manufacturing specialized components.

An important aspect of the present invention is that the individual vacuum pulse of each individual cylinder determines or regulates the amount of fuel drawn in by that cylinder without the need for a separate regulator or injector, and without an electronic controller. Each cylinder draws in an individualized quantity of fuel during its own intake stroke.

Various features of the invention are set forth in the following claims.

What is claimed is:

**1**. A gaseous fuel mixing device configured for use with an internal combustion engine, the mixing device comprising:

a body including an air/fuel passageway, and a gaseous fuel passageway in fluid communication with the air/fuel passageway;

a throttle valve pivotably coupled to the body and positioned in the air/fuel passageway;

an intake unit coupled to the body, the intake unit including

an inlet configured to be fluidly connected with a source of gaseous fuel;

a first jet fluidly communicating the inlet and the gaseous fuel passageway;

a second jet selectively fluidly communicating the inlet and the gaseous fuel passageway; and

a selector valve operable to control a flow of gaseous fuel through the second jet.

**2**. The gaseous fuel mixing device of claim **1**, wherein the intake unit includes a gaseous fuel chamber in fluid communication with the gaseous fuel passageway, wherein the first jet is configured to transfer gaseous fuel from the inlet to the gaseous fuel chamber, and wherein the second jet is configured to transfer gaseous fuel, upon actuation of the selector valve, from the inlet to the gaseous fuel chamber.

**3**. The gaseous fuel mixing device of claim **2**, further comprising an idle jet housing at least partially positioned within the gaseous fuel chamber, wherein the idle jet housing includes a second gaseous fuel chamber in fluid communication with the gaseous fuel passageway, and at least one orifice selectively fluidly communicating the first gaseous fuel chamber in the intake unit with the second gaseous fuel chamber.

**4**. The gaseous fuel mixing device of claim **3**, wherein the selector valve is configured to control the flow of gaseous fuel through the second jet and the orifice in the idle jet housing.

**5**. The gaseous fuel mixing device of claim **3**, wherein the body includes a second gaseous fuel passageway in fluid communication with the air/fuel passageway, and wherein the second gaseous fuel passageway directly fluidly connects the first gaseous fuel chamber in the intake unit with the air/fuel passageway.

**6**. The gaseous fuel mixing device of claim **5**, wherein the second gaseous fuel passageway is configured to receive gaseous fuel from at least one of the first and second jets when the throttle valve is substantially open.

**7**. The gaseous fuel mixing device of claim **5**, wherein the first gaseous fuel passageway is configured to receive gaseous fuel from at least one of the first and second jets, via the orifice in the idle jet housing, when the throttle valve is substantially closed.

**8**. The gaseous fuel mixing device of claim **3**, wherein the orifice has a cross-sectional area less than a cross-sectional area of the first jet, and wherein the cross-sectional area of the orifice is less than a cross-sectional area of the second jet.

**9**. The gaseous fuel mixing device of claim **1**, wherein the selector valve is configured to be moved between a first position, in which the second jet is at least partially closed, and a second position, in which the second jet is substantially open.

**10**. The gaseous fuel mixing device of claim **1**, wherein the body includes a second air/fuel passageway and a second gaseous fuel passageway in fluid communication with the second air/fuel passageway, and wherein each of the first and second gaseous fuel passageways is configured to draw an amount of gaseous fuel, based upon individual demand of fuel through the respective first and second air/fuel passageways, from the intake unit.

**11**. The gaseous fuel mixing device of claim **1**, wherein the body includes a modified carburetor body originally configured for use with a liquid fuel, wherein the gaseous fuel passageway has an inlet in communication with an exterior of the body and an outlet in communication with the air/fuel passageway, and wherein the body includes a closed liquid fuel passageway.

**12**. A gaseous fuel mixing device configured for use with an internal combustion engine, the mixing device comprising:

a body including

a first air/fuel passageway;

a second air/fuel passageway;

a first gaseous fuel passageway in fluid communication with the first air/fuel passageway;

a second gaseous fuel passageway in fluid communication with the second air/fuel passageway;

a first throttle valve pivotably coupled to the body and positioned in the first air/fuel passageway;

a second throttle valve pivotably coupled to the body and positioned in the second air/fuel passageway; and

an intake unit coupled to the body and in fluid communication with a source of gaseous fuel, wherein each of the first and second gaseous fuel passageways is configured to draw an amount of gaseous fuel, based upon individual demand of fuel through the respective first and second air/fuel passageways, from the intake unit.

**13**. The gaseous fuel mixing device of claim **12**, wherein the intake unit includes

an inlet configured to be fluidly connected with the source of gaseous fuel;

a first jet fluidly communicating the inlet with the first and second gaseous fuel passageways;

a second jet selectively fluidly communicating the inlet with the first and second gaseous fuel passageways; and

a selector valve configured to control a flow of gaseous fuel through the second jet.

**14**. The gaseous fuel mixing device of claim **13**, wherein the intake unit includes a gaseous fuel chamber in fluid communication with the first and second gaseous fuel passageways, wherein the first jet is configured to transfer gaseous fuel from the inlet to the gaseous fuel chamber, and wherein the second jet is configured to transfer gaseous fuel, upon actuation of the selector valve, from the inlet to the gaseous fuel chamber.

**15**. The gaseous fuel mixing device of claim **14**, further comprising an idle jet housing at least partially positioned within the gaseous fuel chamber, wherein the idle jet housing includes a second gaseous fuel chamber in fluid communication with the first and second gaseous fuel passageways, and at least one orifice selectively fluidly communicating the first gaseous fuel chamber in the intake unit with the second gaseous fuel chamber.

**16**. The gaseous fuel mixing device of claim **15**, wherein the selector valve is configured to control the flow of gaseous fuel through the second jet and the orifice in the idle jet housing.

**17**. The gaseous fuel mixing device of claim **15**, wherein the body includes

a third gaseous fuel passageway in fluid communication with the first air/fuel passageway; and

a fourth gaseous fuel passageway in fluid communication with the second air/fuel passageway, wherein the third gaseous fuel passageway directly fluidly connects the first gaseous fuel chamber in the intake unit with the first air/fuel passageway, and wherein the fourth gaseous fuel passageway directly fluidly connects the first gaseous fuel chamber in the intake unit with the second air/fuel passageway .

**18**. The gaseous fuel mixing device of claim **17**, wherein the third and fourth gaseous fuel passageways are each configured to draw gaseous fuel from at least one of the first and second jets when the throttle valve is substantially open.

**19**. The gaseous fuel mixing device of claim **17**, wherein the first and second gaseous fuel passageways are each configured to draw gaseous fuel from at least one of the first and second jets, via the orifice in the idle jet housing, when the throttle valve is substantially closed.

**20**. The gaseous fuel mixing device of claim **15**, wherein the orifice has a cross-sectional area less than a cross-sectional area of the first jet, and wherein the cross-sectional area of the orifice is less than a cross-sectional area of the second jet.

**21**. The gaseous fuel mixing device of claim **13**, wherein the selector valve is configured to be moved between a first position, in which the second jet is at least partially closed, and a second position, in which the second jet is substantially open.

**22**. The gaseous fuel mixing device of claim **12**, wherein the body includes a modified carburetor body originally configured for use with a liquid fuel, wherein each of the first and second gaseous fuel passageways has an inlet in communication with an exterior of the body, and wherein the body includes a closed liquid fuel passageway.

**23**. A gaseous fuel mixing device configured for use with an internal combustion engine, the mixing device comprising:

a modified carburetor body, originally configured for use with a liquid fuel, including

an air/fuel passageway;

a gaseous fuel passageway having an inlet in communication with an exterior of the body and an outlet in communication with the air/fuel passageway;

a closed liquid fuel passageway;

a throttle valve pivotably coupled to the carburetor body and positioned in the air/fuel passageway; and

an intake unit coupled to the carburetor body, the intake unit configured to deliver gaseous fuel to the gaseous fuel passageway in the carburetor body.

**24**. The gaseous fuel mixing device of claim **23**, wherein the intake unit includes

an inlet configured to be fluidly connected with a source of gaseous fuel;

a first jet fluidly communicating the inlet with the gaseous fuel passageway;

a second jet selectively fluidly communicating the inlet with the gaseous fuel passageway; and

a selector valve operable to control a flow of gaseous fuel through the second jet.

**25**. The gaseous fuel mixing device of claim **24**, wherein the intake unit includes a gaseous fuel chamber in fluid communication with the gaseous fuel passageway, wherein the first jet is configured to transfer gaseous fuel from the inlet to the gaseous fuel chamber, and wherein the second jet is configured to transfer gaseous fuel, upon actuation of the selector valve, from the inlet to the gaseous fuel chamber.

**26**. The gaseous fuel mixing device of claim **25**, further comprising an idle jet housing at least partially positioned within the gaseous fuel chamber, wherein the idle jet housing includes a second gaseous fuel chamber in fluid communication with the gaseous fuel passageway, and at least one orifice selectively fluidly communicating the first gaseous fuel chamber in the intake unit with the second gaseous fuel chamber.

**27**. The gaseous fuel mixing device of claim **26**, wherein the selector valve is configured to control the flow of gaseous fuel through the second jet and the orifice in the idle jet housing.

**28**. The gaseous fuel mixing device of claim **25**, wherein the body includes a second gaseous fuel passageway in fluid communication with the air/fuel passageway, and wherein the second gaseous fuel passageway directly fluidly connects the first gaseous fuel chamber in the intake unit with the air/fuel passageway.

**29**. The gaseous fuel mixing device of claim **28**, wherein the second gaseous fuel passageway is configured to draw gaseous fuel from at least one of the first and second jets when the throttle valve is substantially open.

**30**. The gaseous fuel mixing device of claim **26**, wherein the first gaseous fuel passageway is configured to draw gaseous fuel from at least one of the first and second jets, via the orifice in the idle jet housing, when the throttle valve is substantially closed.

**31**. The gaseous fuel mixing device of claim **26**, wherein the orifice has a cross-sectional area less than a cross-sectional area of the first jet, and wherein the cross-sectional area of the orifice is less than a cross-sectional area of the second jet.

**32**. The gaseous fuel mixing device of claim **24**, wherein the selector valve is configured to be moved between a first position, in which the second jet is at least partially closed, and a second position, in which the second jet is substantially open.

**33**. The gaseous fuel mixing device of claim **23**, wherein the body includes a second air/fuel passageway and a second gaseous fuel passageway in fluid communication with the second air/fuel passageway, and wherein each of the first and second gaseous fuel passageways is configured to draw an amount of gaseous fuel, based upon individual demand of fuel through the respective first and second air/fuel passageways, from the intake unit.

* * * * *