US 20120262389A1

(19) United States

(12) Patent Application Publication

(10) Pub. No.: US 2012/0262389 A1

(43) Pub. Date: Oct. 18, 2012

Kida et al.

(54) DISPLAY PANEL WITH TOUCH DETECTION FUNCTION, DRIVE CIRCUIT, AND ELECTRONIC UNIT

(75) Inventors: **Yoshitoshi Kida**, Kanagawa (JP); **Koji Noguchi**, Kanagawa (JP); **Hiroshi Mizuhashi**, Kanagawa (JP); **Kohei Azumi**, Tokyo (JP)

(73) Assignee: **Sony Corporation**, Tokyo (JP)

(21) Appl. No.: **13/420,669**

(22) Filed: **Mar. 15, 2012**

(30) **Foreign Application Priority Data**

Apr. 13, 2011 (JP) 2011-089430

Publication Classification

(51) **Int. Cl.**
G06F 3/041 (2006.01)

(52) **U.S. Cl.** **345/173**

(57) **ABSTRACT**

There are provided a display panel with a touch detection function, a drive circuit, and an electronic unit, which make it possible to realize many functions related to touch detection. The display panel includes: one or more display elements; one or more drive electrodes extending in one direction; an electrode drive section integrated into a chip, and applying a drive signal to the drive electrodes; and one or more touch detection electrodes extending in a direction intersecting the direction in which the drive electrodes extend.

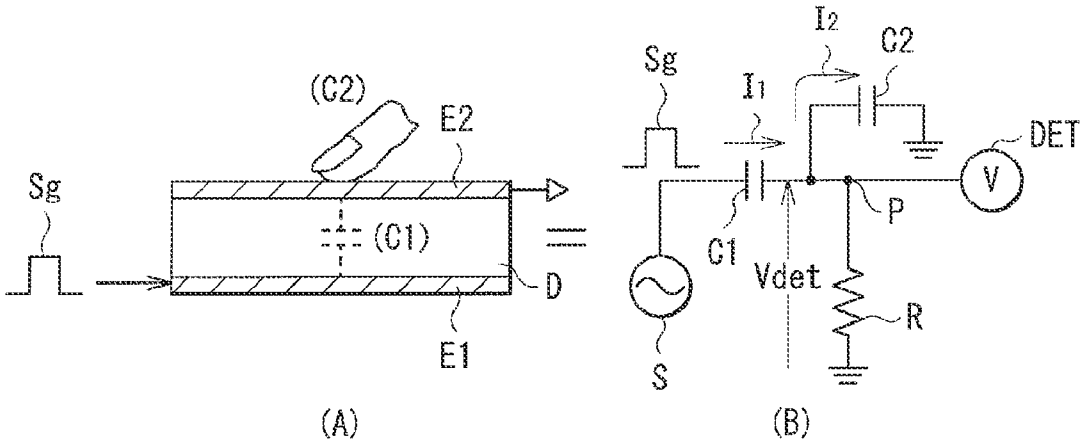

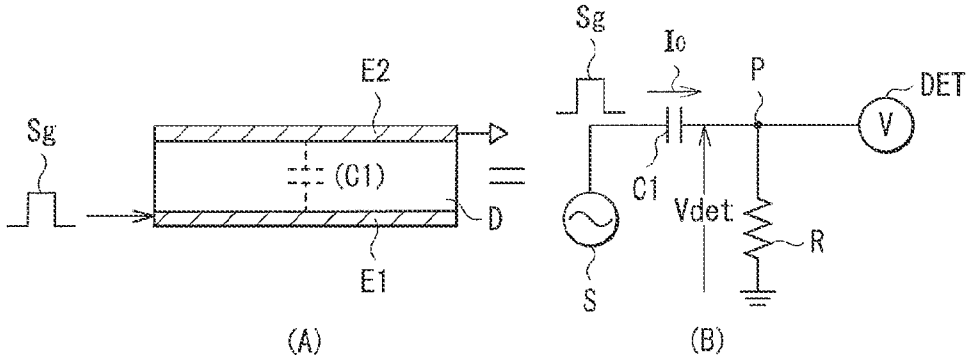

FIG. 1

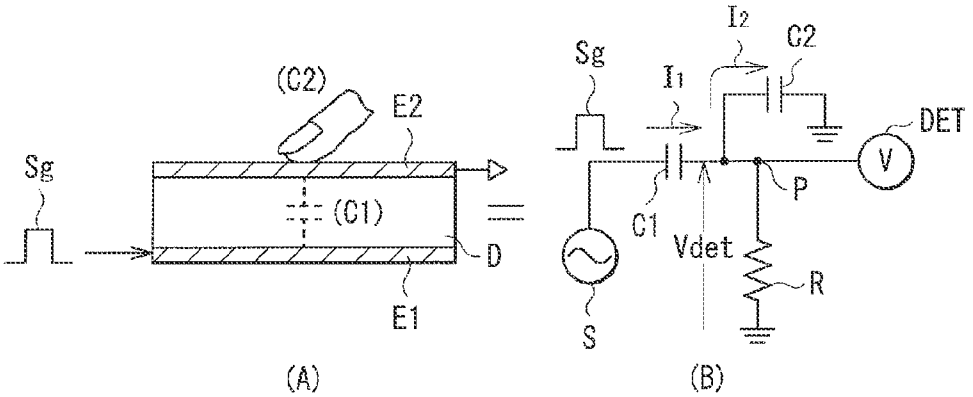

FIG. 2

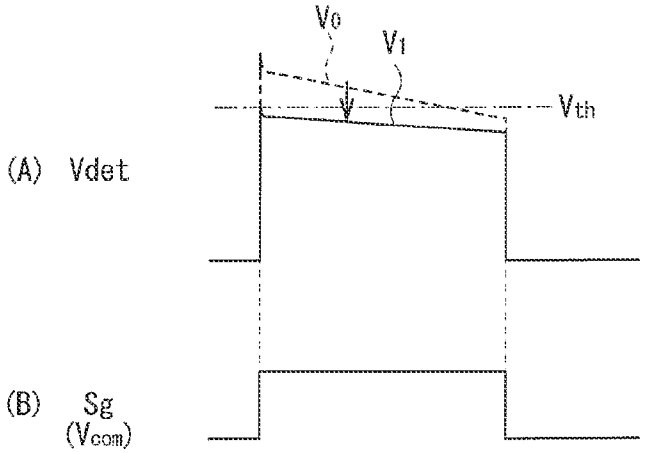

FIG. 3

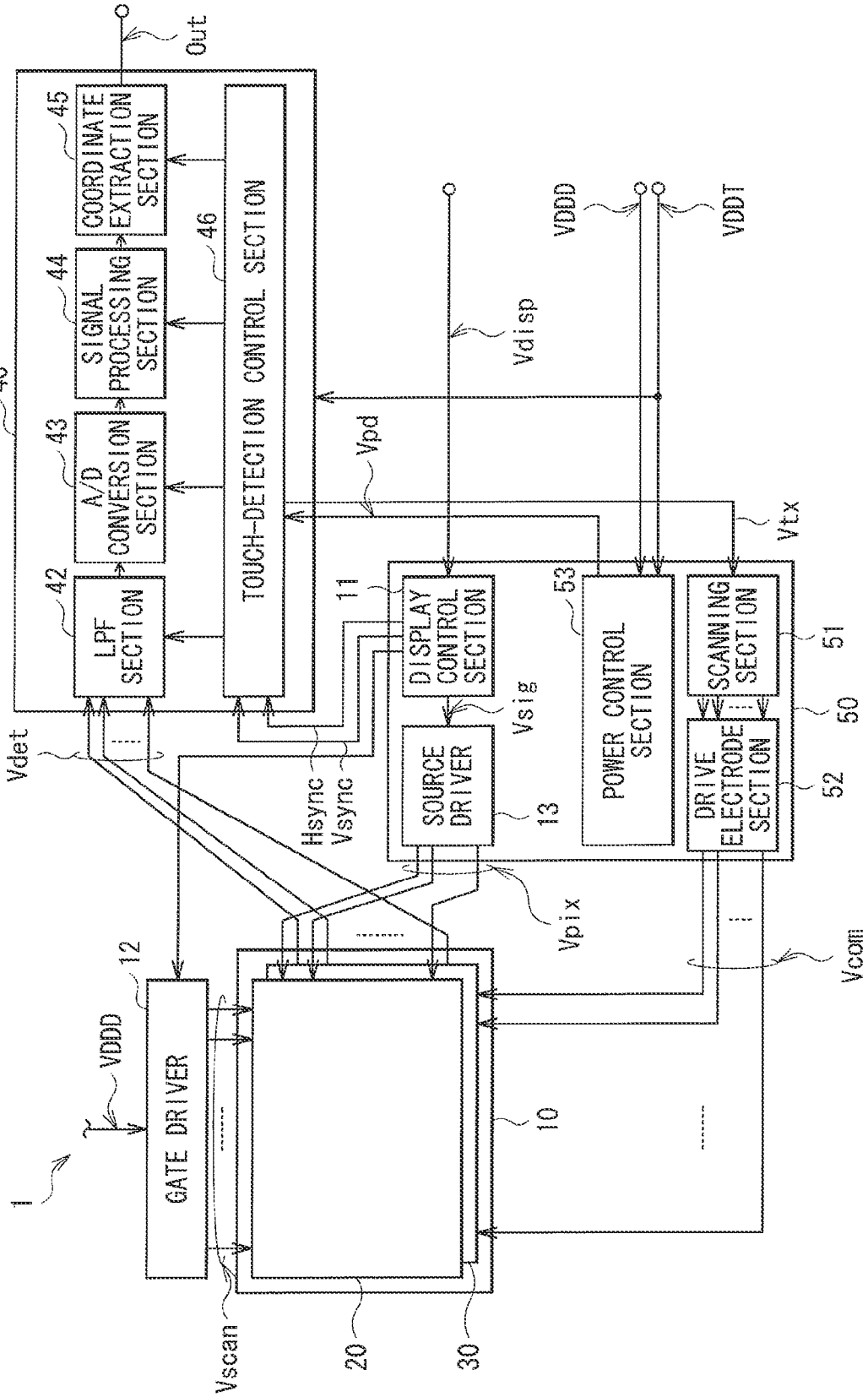
Out
45
COORDINATE EXTRACTION SECTION
44
SIGNAL PROCESSING SECTION
43
A/D CONVERSION SECTION
42
LPF SECTION
40
46
TOUCH-DETECTION CONTROL SECTION
Vdisp
VDDD
VDDT
Vpd
Vtx
11
DISPLAY CONTROL SECTION
53
POWER CONTROL SECTION
SCANNING SECTION
51
50
Vsig
SOURCE DRIVER
13
DRIVE ELECTRODE SECTION
52
Vdet
Hsync
Vsync
Vpix
Vcom
12
VDDD
GATE DRIVER
10
1
Vscan
20
30

FIG. 4

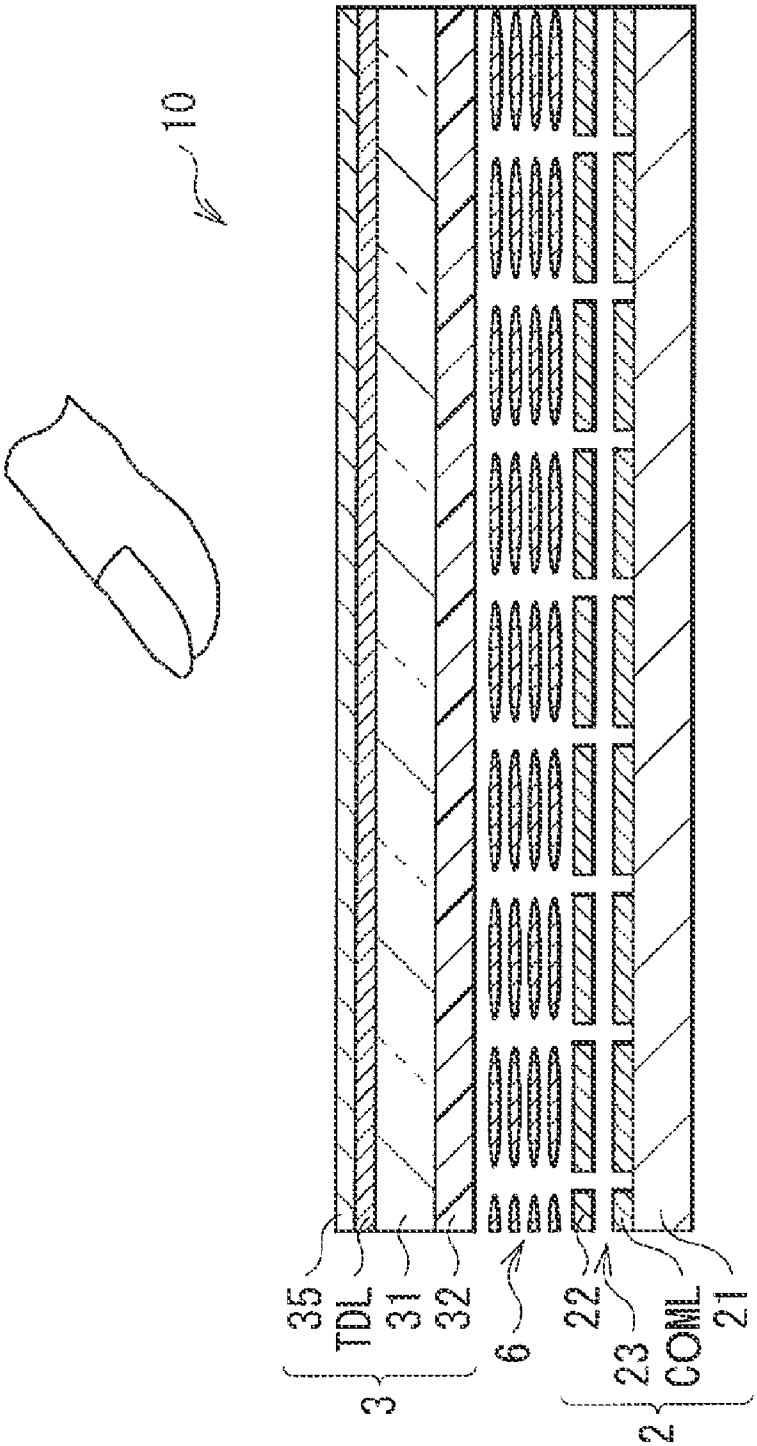

FIG. 5

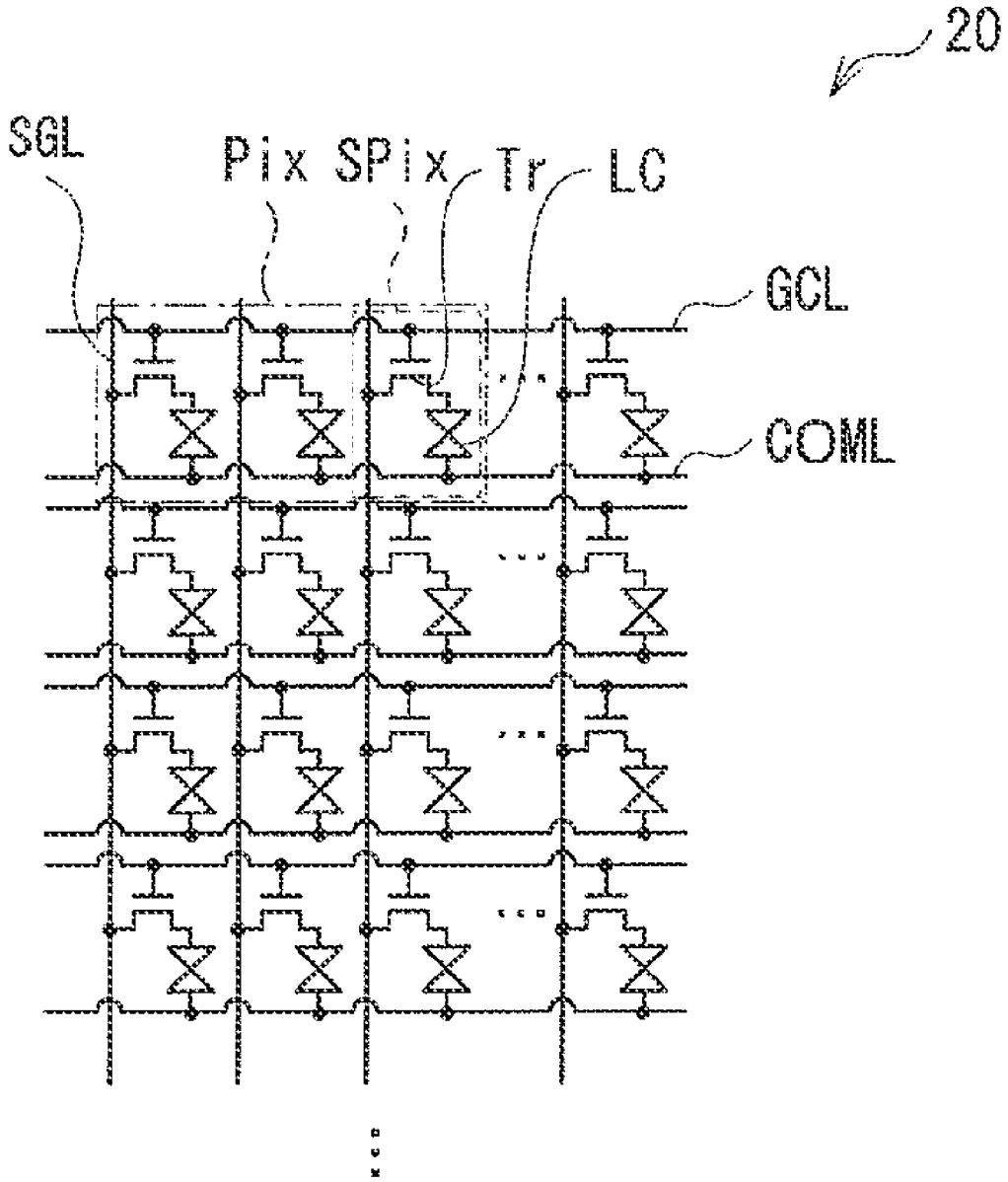

FIG. 6

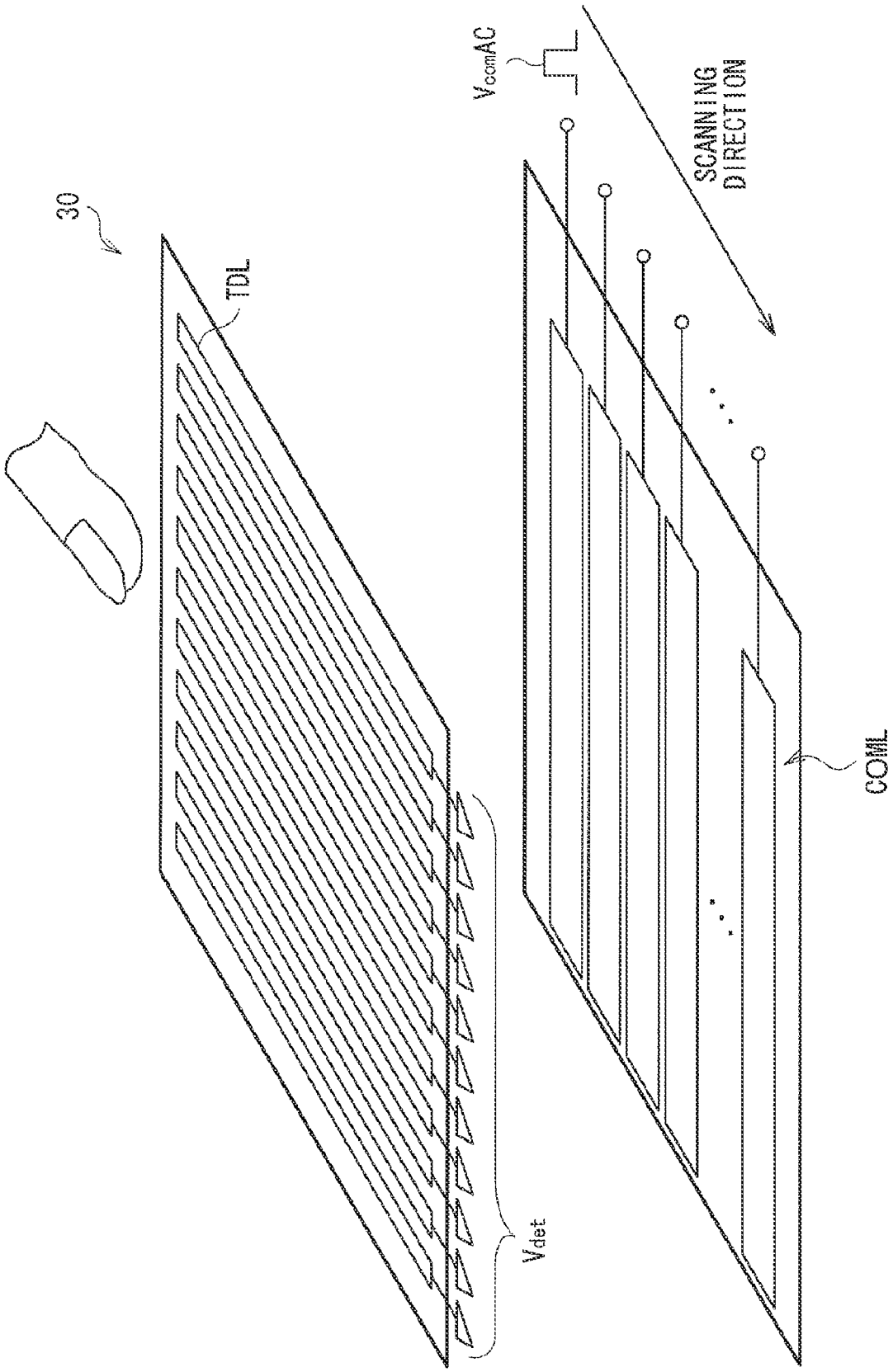

FIG. 7

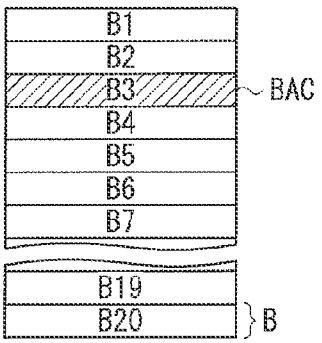

FIG. 8A

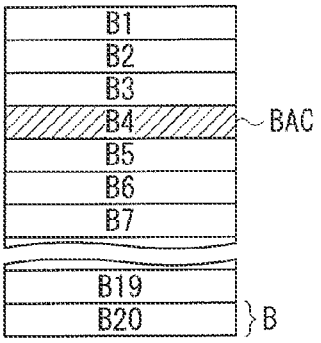

FIG. 8B

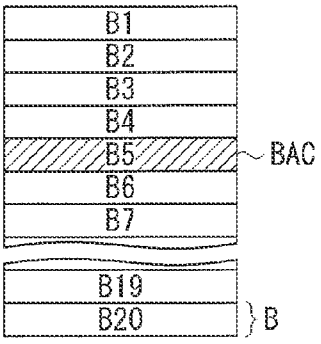

FIG. 8C

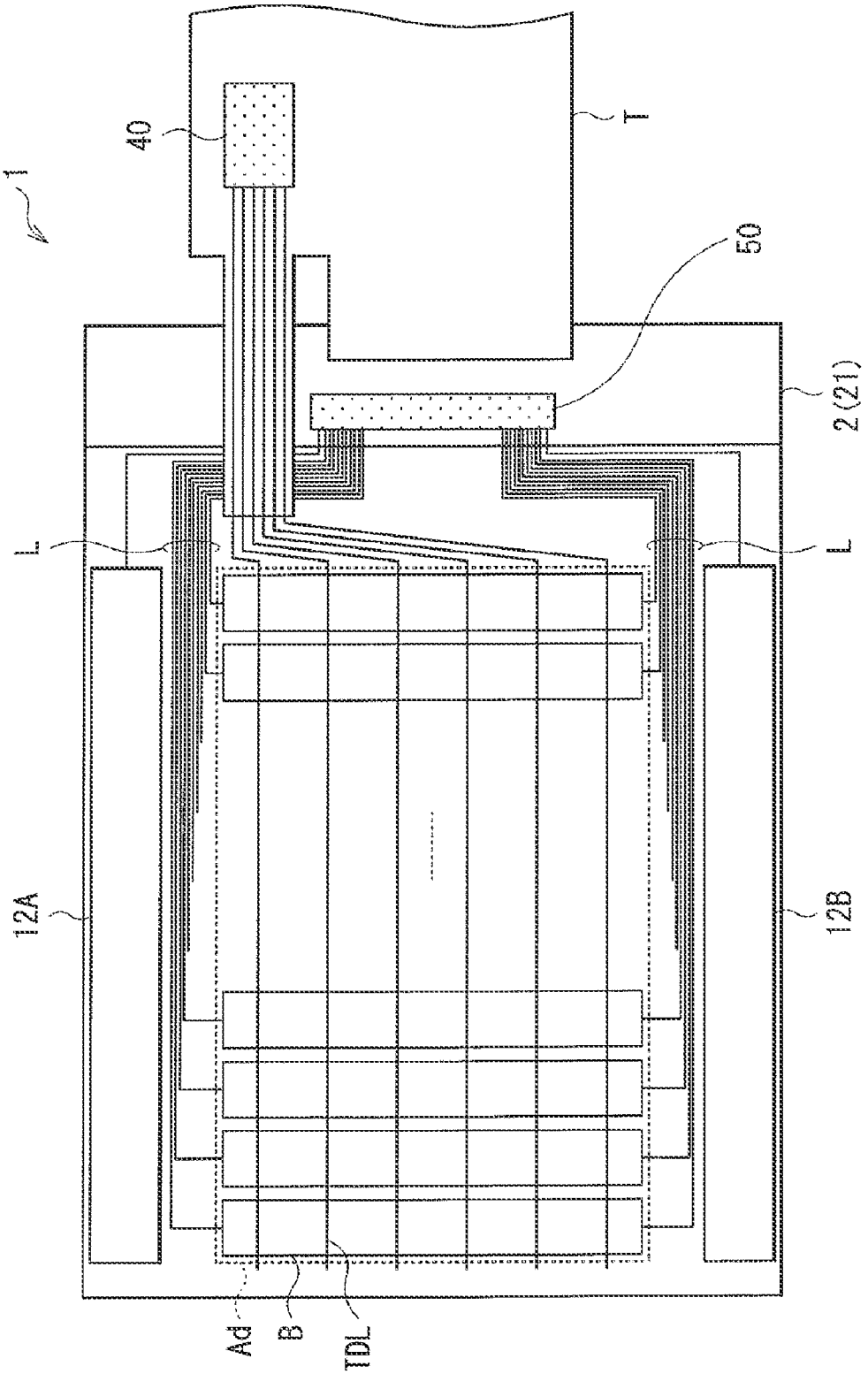

FIG. 9

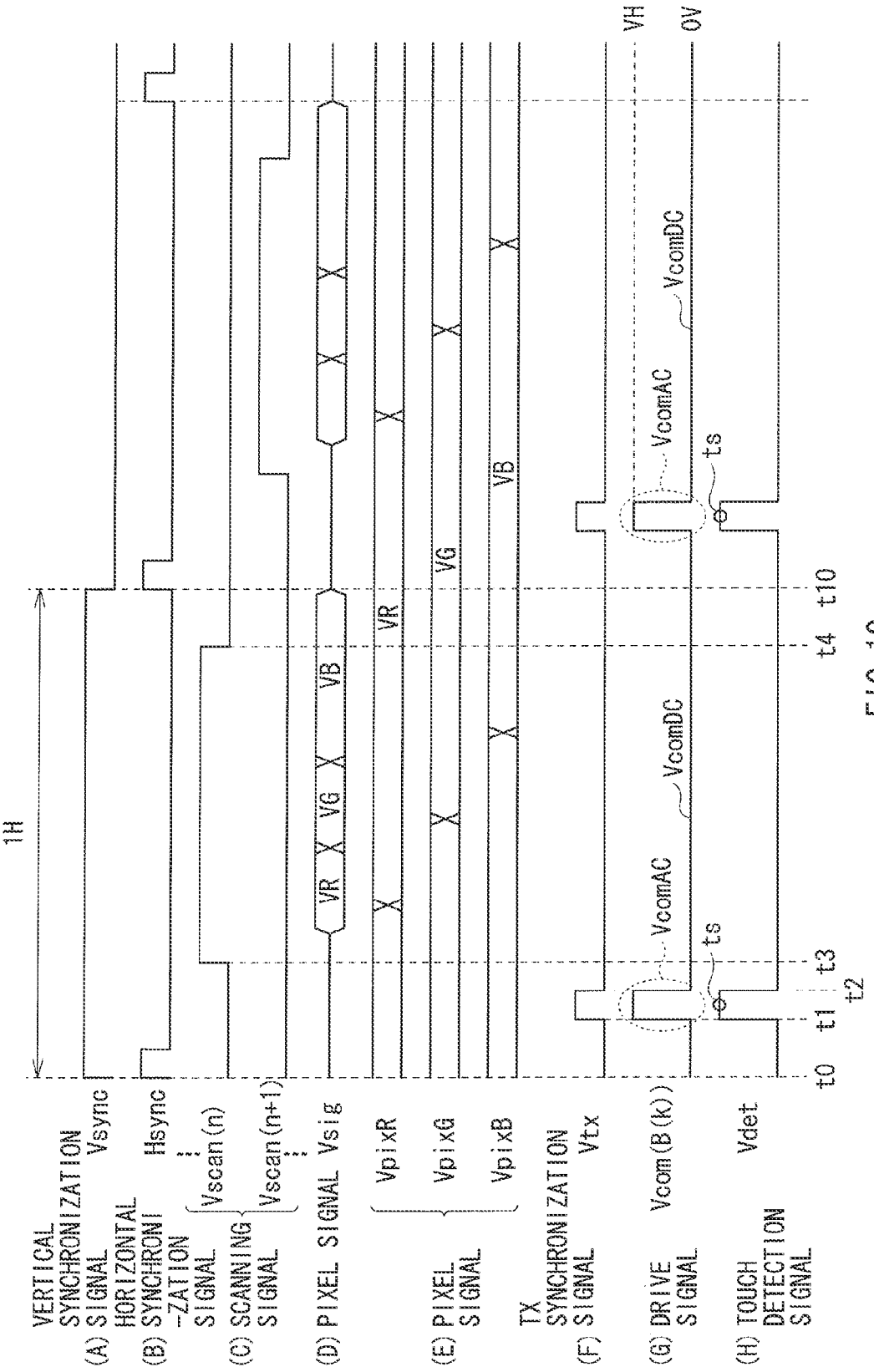
1H
VERTICAL SYNCHRONIZATION SIGNAL
(A) Vsync
HORIZONTAL SYNCHRONI-ZATION SIGNAL
(B) Hsync
SCANNING SIGNAL
(C) Vscan(n)
Vscan(n+1)
PIXEL SIGNAL
(D) Vsig
VR
VG
VB
VR
VG
VB
PIXEL SIGNAL
(E) VpixR
VpixG
VpixB
TX SYNCHRONIZATION SIGNAL
(F) Vtx
DRIVE SIGNAL
(G) Vcom(B(k))
VcomAC
VcomDC
VcomAC
VcomDC
TOUCH DETECTION SIGNAL
(H) Vdet
ts
ts
VH
0V
t0
t1
t2
t3
t4
t10

FIG. 10

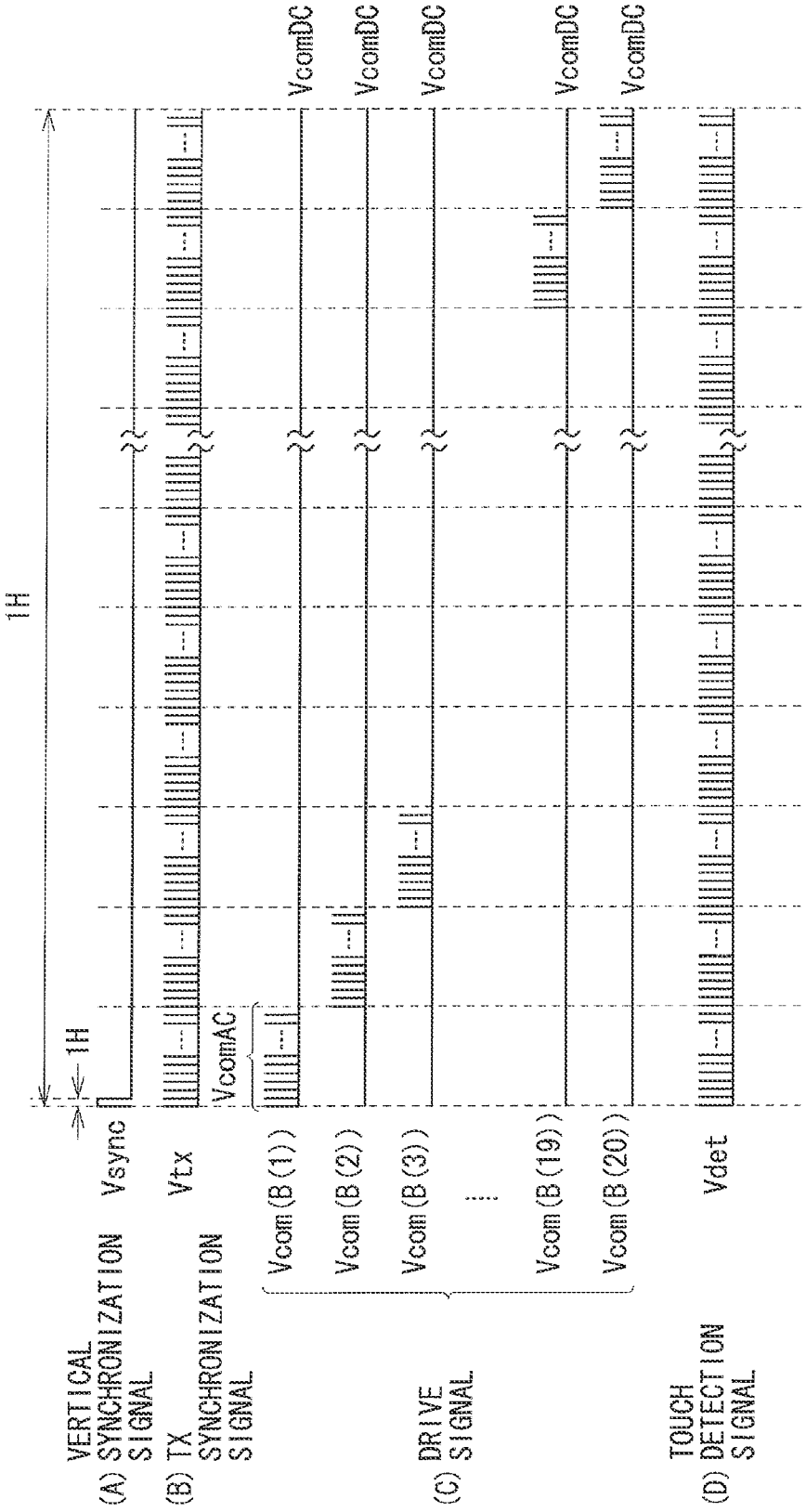
1H
1H
VERTICAL SYNCHRONIZATION SIGNAL
(A)
Vsync
(B) TX SYNCHRONIZATION SIGNAL
Vtx
VcomAC
VcomDC
VcomDC
VcomDC
VcomDC
VcomDC
(C) DRIVE SIGNAL
Vcom(B(1))
Vcom(B(2))
Vcom(B(3))
Vcom(B(19))
Vcom(B(20))
TOUCH DETECTION SIGNAL
(D)
Vdet

FIG. 11

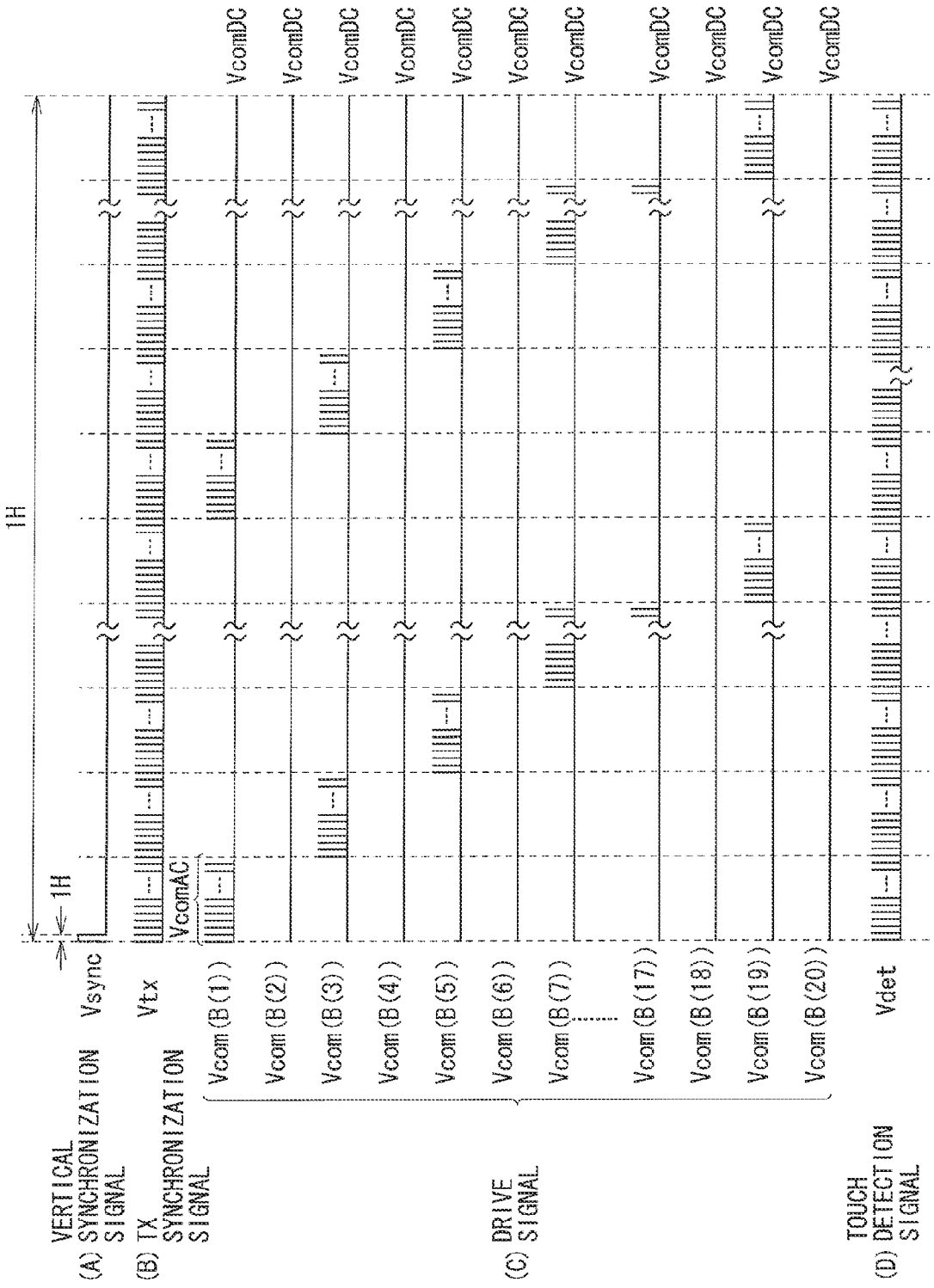
1H
1H
VERTICAL SYNCHRONIZATION SIGNAL
(A) Vsync
(B) TX SYNCHRONIZATION SIGNAL
Vtx
VcomAC
(C) DRIVE SIGNAL
Vcom(B(1))
Vcom(B(2))
Vcom(B(3))
Vcom(B(4))
Vcom(B(5))
Vcom(B(6))
Vcom(B(7))
Vcom(B(17))
Vcom(B(18))
Vcom(B(19))
Vcom(B(20))
VcomDC
TOUCH DETECTION SIGNAL
(D) Vdet

FIG. 12

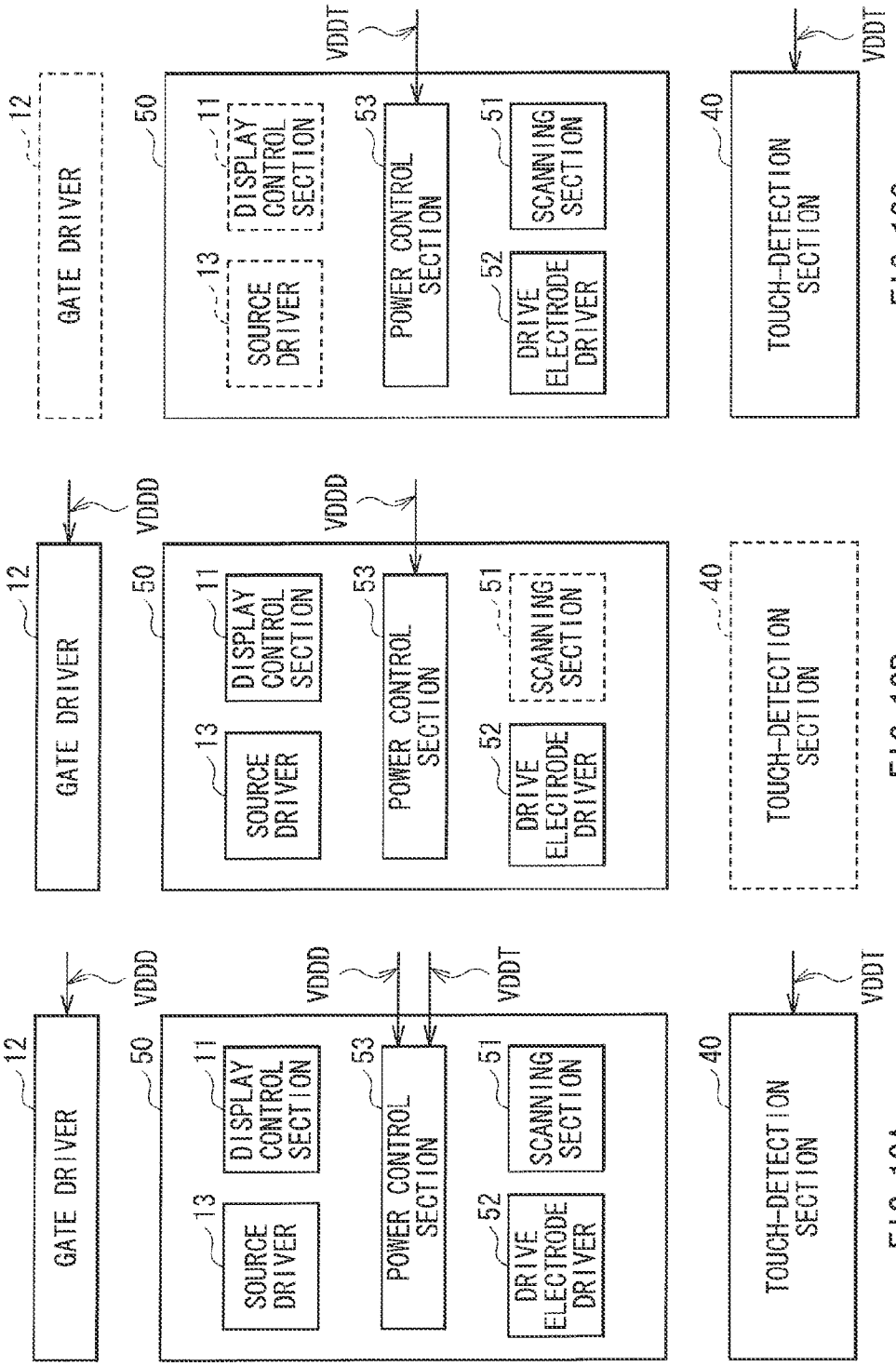

FIG. 13A

FIG. 13B

FIG. 13C

FIG. 14A

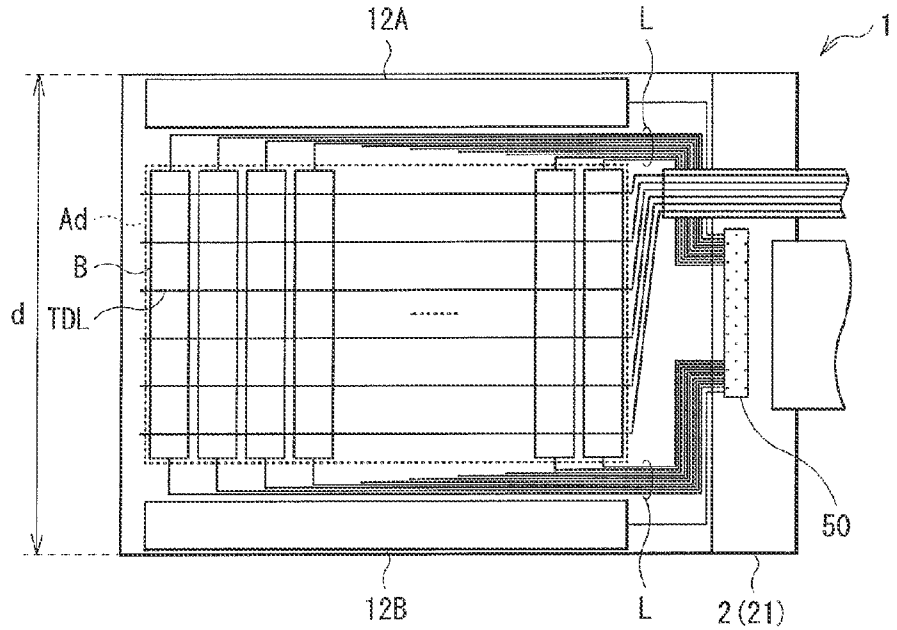

FIG. 14B

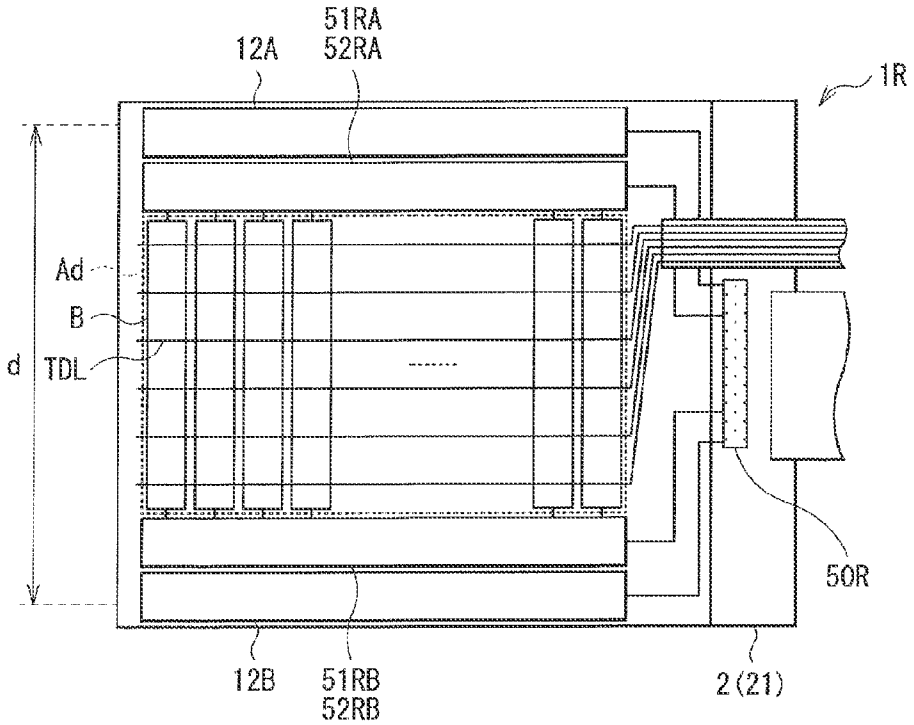

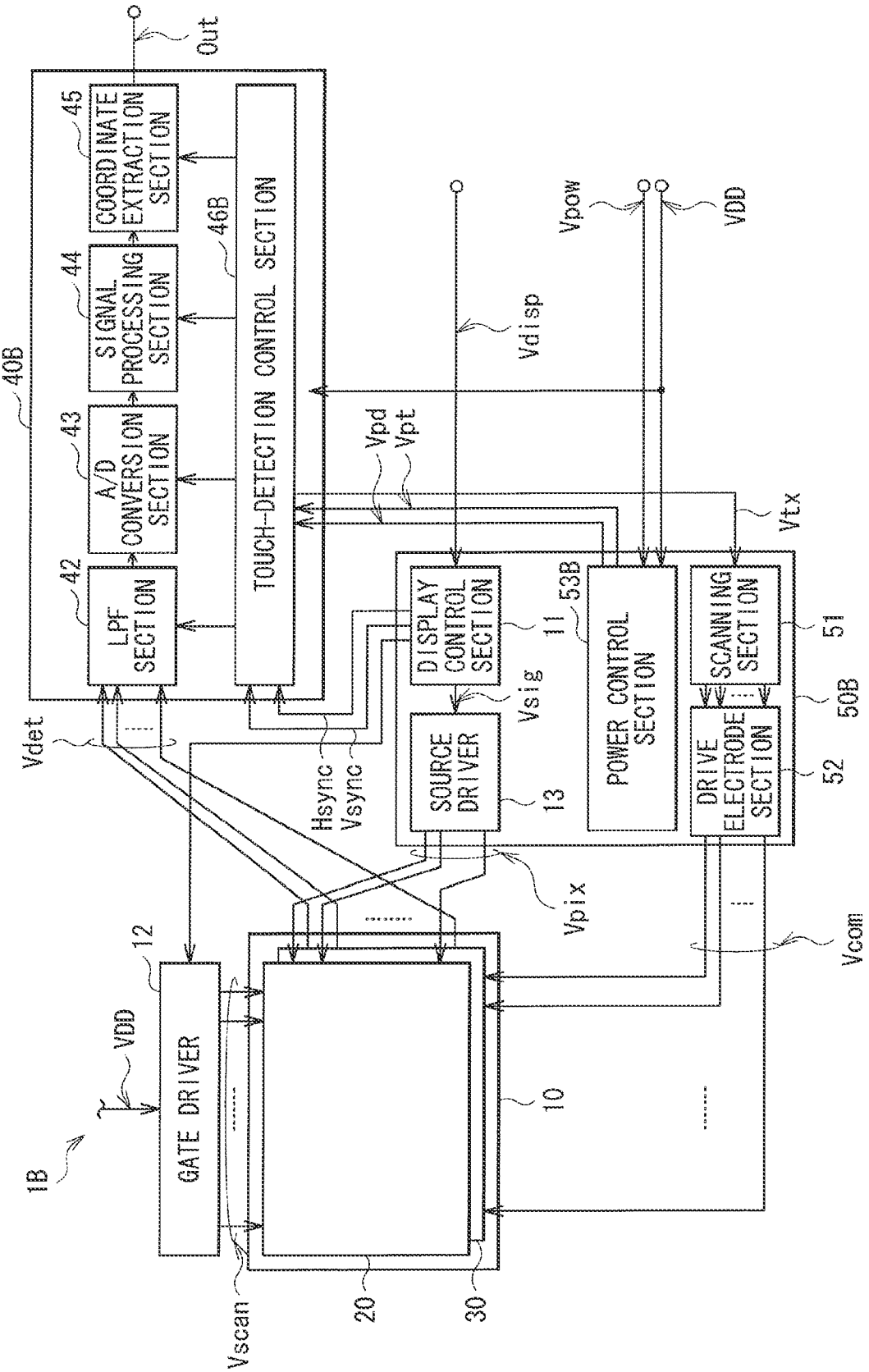
Out
45
COORDINATE EXTRACTION SECTION
44
SIGNAL PROCESSING SECTION
43
A/D CONVERSION SECTION
42
LPF SECTION
40B
46B
TOUCH-DETECTION CONTROL SECTION
Vdisp
Vpow
VDD
Vpd
Vpt
Vtx
DISPLAY CONTROL SECTION
11
53B
POWER CONTROL SECTION
SCANNING SECTION
51
50B
Vsig
SOURCE DRIVER
13
DRIVE ELECTRODE SECTION
52
Vdet
Hsync
Vsync
Vpix
Vcom
12
VDD
GATE DRIVER
1B
10
Vscan
20
30

FIG. 15

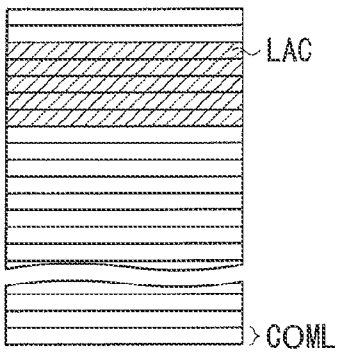

FIG. 16A

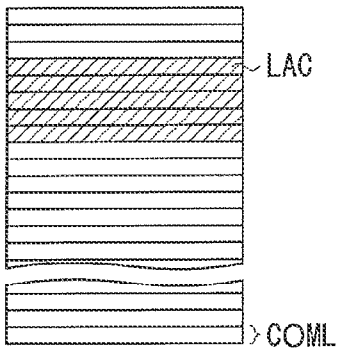

FIG. 16B

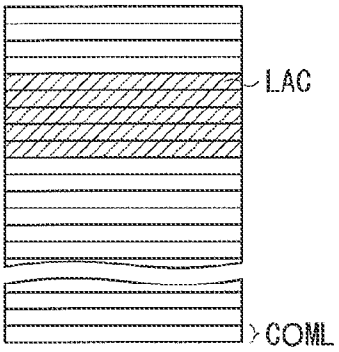

FIG. 16C

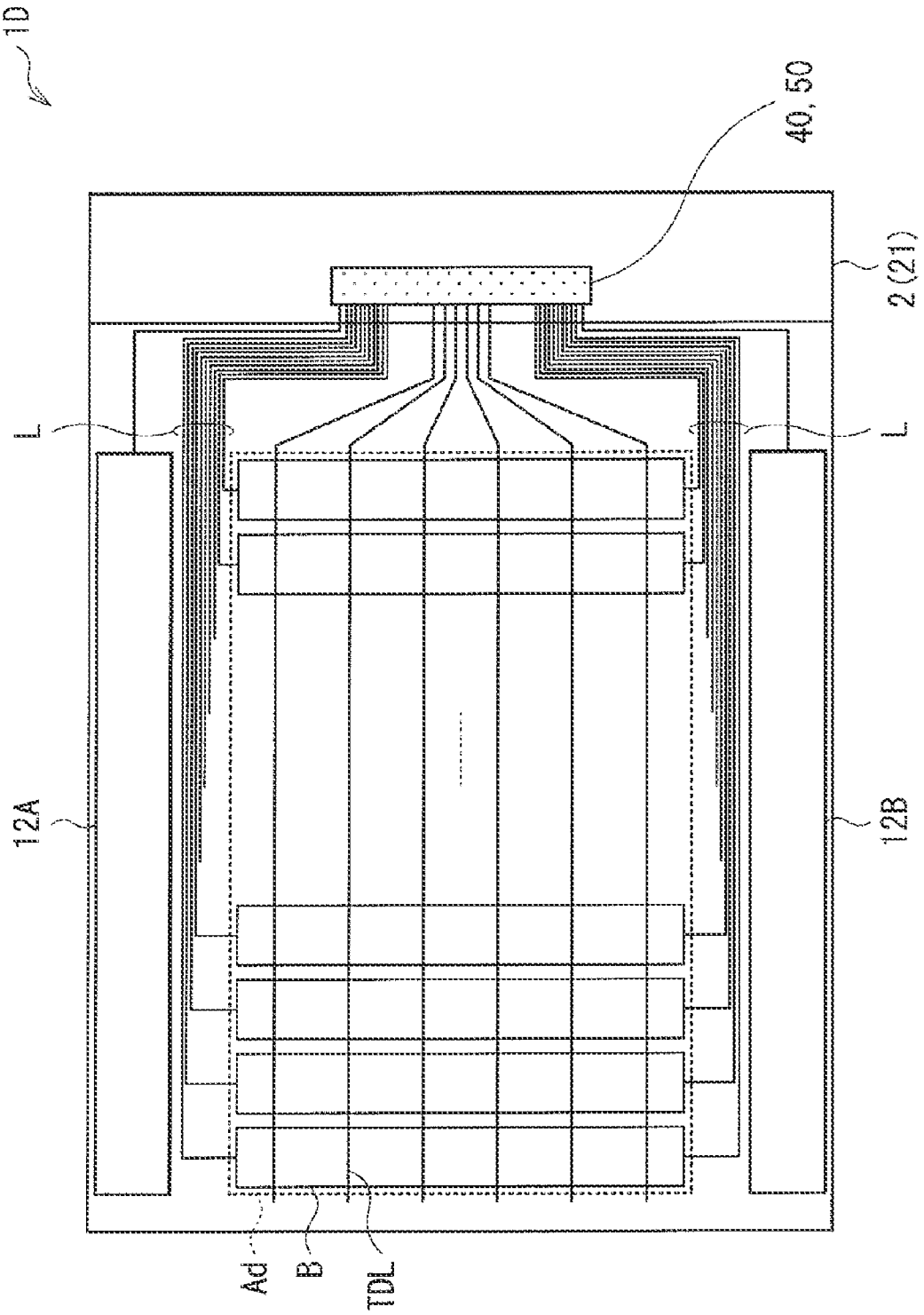

FIG. 17

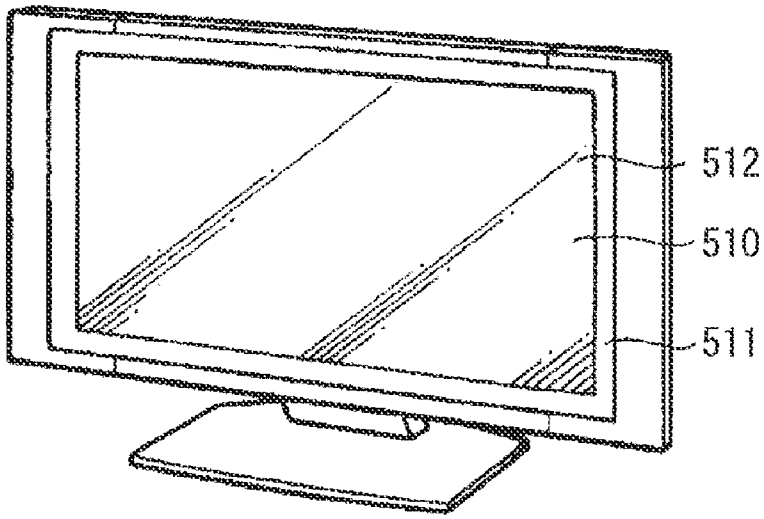

FIG. 18

FIG. 19A

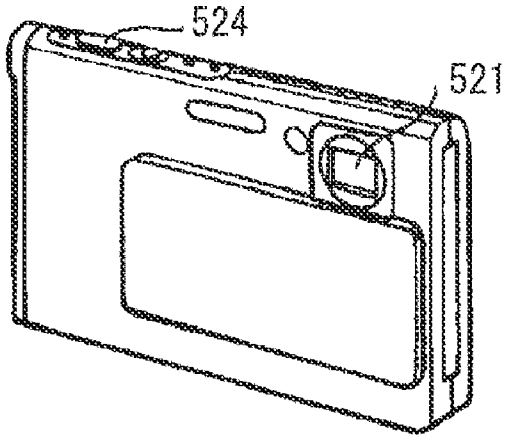

FIG. 19B

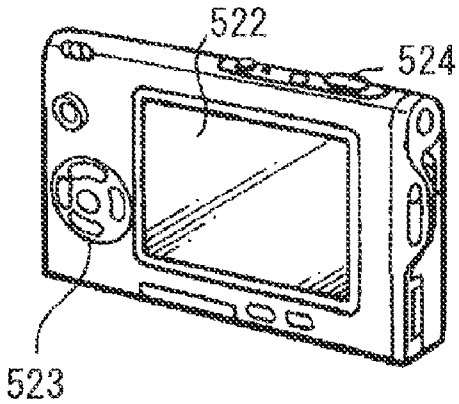

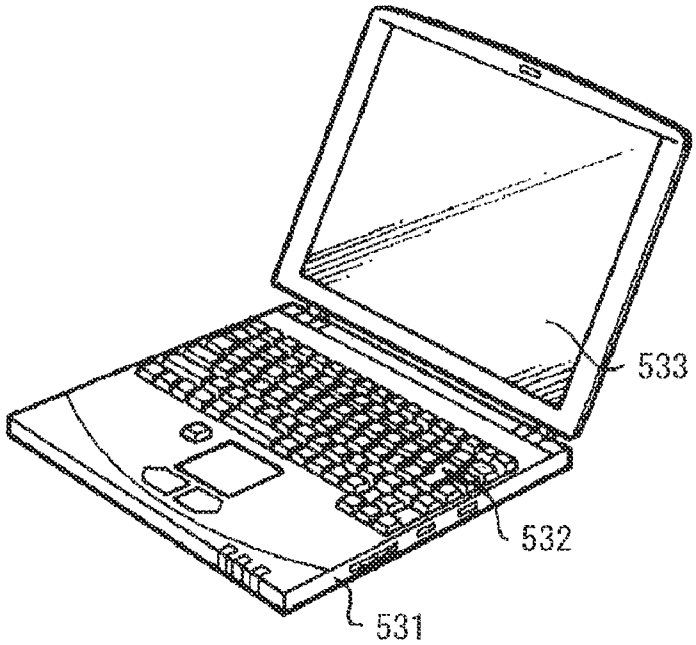

FIG. 20

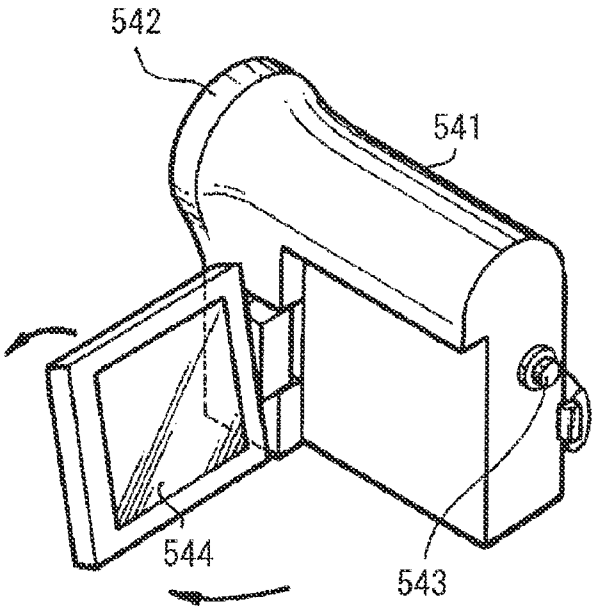

FIG. 21

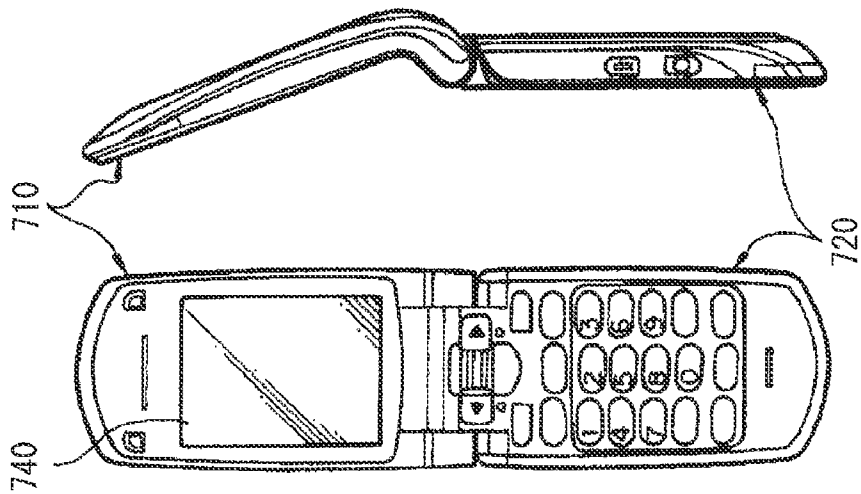

FIG. 22A

FIG. 22B

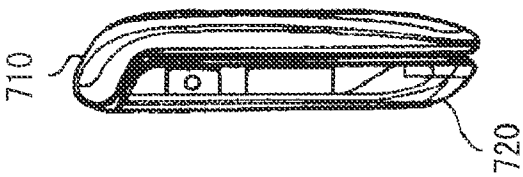

FIG. 22D

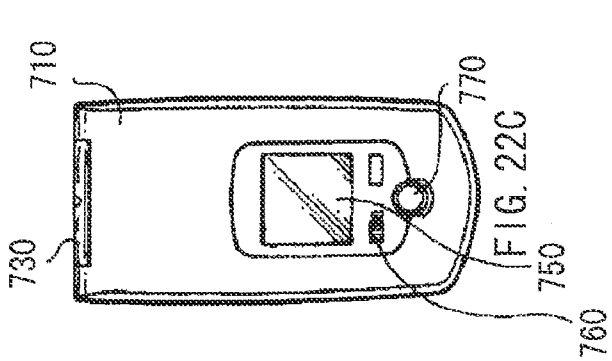

FIG. 22C

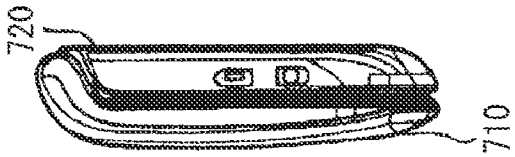

FIG. 22E

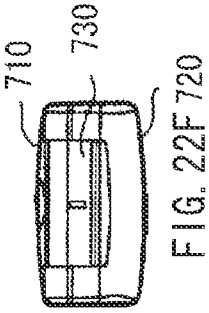

FIG. 22F

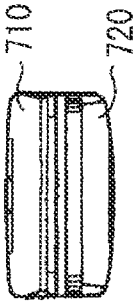

FIG. 22G

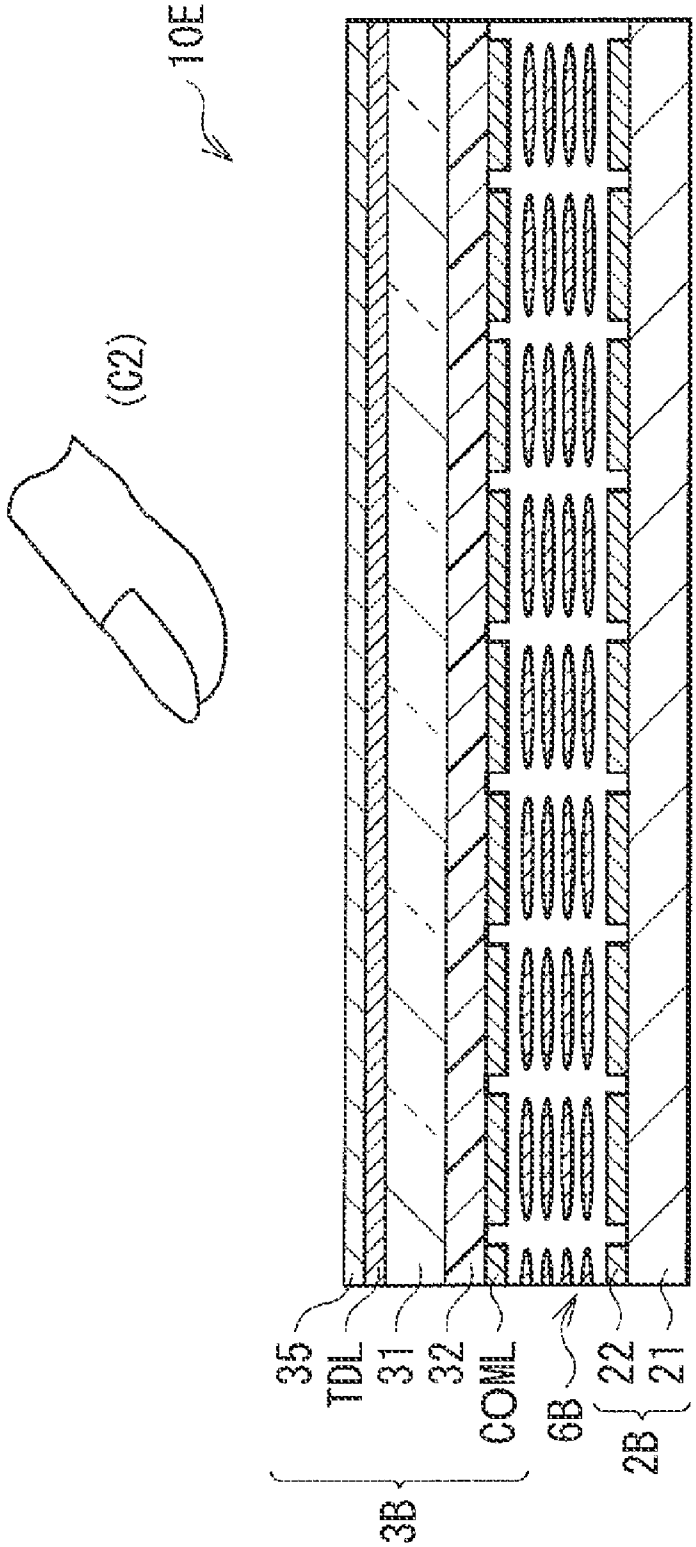

FIG. 23

DISPLAY PANEL WITH TOUCH DETECTION FUNCTION, DRIVE CIRCUIT, AND ELECTRONIC UNIT

BACKGROUND

[0001] The present disclosure relates to a display panel with a touch detection function which detects a touch event by an external proximity object, a drive circuit thereof, and an electronic unit having such a display panel with a touch detection function.

[0002] In recent years, attention has been given to a display panel configured by mounting a contact sensing device, a so-called touch panel, on a display such as a liquid crystal display or the like, or integrating the touch panel and the display, thereby causing the display to display various button images and the like to enable information input, in place of ordinary mechanical buttons. The display panel having such a touch panel is allowed not to have an input device such as a keyboard, a mouse, or a keypad and therefore, there is a growing trend to use the display panel in a portable information terminal such as a portable telephone, in addition to a computer.

[0003] There are some types of the touch panel, including an optical type, a resistive type, and a capacitance type. For example, Japanese Unexamined Patent Application Publication No. 2009-258182 has proposed a so-called in-cell type display panel with a touch detection function. According to this document, in a capacitance-type touch panel, a common electrode for display originally provided in a display is used as one of a pair of touch sensor electrodes, and the other (a touch detection electrode) is disposed to intersect this common electrode. In this display panel with a touch detection function, an AC signal applied to this common electrode is transmitted to the touch detection electrode via a capacitance between the common electrode and the touch detection electrode. Then, a touch event is detected based on a detection signal outputted from the touch detection electrode. A drive circuit that performs driving by applying this AC signal to the common electrode is formed on a TFT board made of glass or the like.

SUMMARY

[0004] Incidentally, it has been desired that such a display panel with a touch detection function have more functions related to touch detection. However, Japanese Unexamined Patent Application Publication No. 2009-258182 provides no specific description about an attempt to achieve multifunctionality.

[0005] In view of the foregoing, it is desirable to provide a display panel with a touch detection function, a drive circuit, and an electronic unit, which make it possible to realize many functions related to touch detection.

[0006] According to an embodiment of the present disclosure, there is provided a first display panel with a touch detection function, the first display panel including one or more display elements; one or more drive electrodes extending in one direction; an electrode drive section integrated into a chip, and applying a drive signal to the drive electrodes; and one or more touch detection electrodes extending in a direction intersecting the direction in which the drive electrodes extend.

[0007] According to another embodiment of the present disclosure, there is provided a second display panel with a touch detection function, the second display panel including one or more display elements; one or more touch detection elements; and a drive section integrated into a chip, and driving the one or more touch detection elements.

[0008] According to another embodiment of the present disclosure, there is provided a drive circuit including a display drive section driving one or more display elements; and an electrode drive section integrated into a chip, and applying a drive signal to one or more drive electrodes that extend in a direction intersecting a direction in which one or more touch detection electrodes extend.

[0009] According to another embodiment of the present disclosure, there is provided an electronic unit including the display panel with a touch detection function and a control section performing operation control using the display panel, the display panel including: one or more display elements; one or more drive electrodes extending in a direction; an electrode drive section integrated into a chip, and applying a drive signal to the drive electrodes; and one or more touch detection electrodes extending in a direction intersecting the direction in which the drive electrodes extend. For example, a television receiver, a digital camera, a personal computer, a video camera, a portable terminal device such as a portable telephone, or the like corresponds to this electronic unit.

[0010] In the first and second display panels, the drive circuit, and the electronic unit according to the above-described embodiments of the present disclosure, the drive signal is applied to the drive electrode by the electrode drive section, and a detection signal according to the drive signal is outputted from the touch detection electrode. This electrode drive section is integrated into the chip.

[0011] According to the first and second display panels, the drive circuit, and the electronic unit in the above-described embodiments of the present disclosure, the electrode drive section is integrated into the chip and thus, it is possible to realize many functions related to touch detection.

[0012] It is to be understood that both the foregoing general description and the following detailed description are exemplary, and are intended to provide further explanation of the technology as claimed.

BRIEF DESCRIPTION OF THE DRAWINGS

[0013] The accompanying drawings are included to provide a further understanding of the disclosure, and are incorporated in and constitute a part of this specification. The drawings illustrate embodiments and, together with the specification, serve to explain the principles of the technology.

[0014] Parts (A) and (B) of FIG. **1** are diagrams for explaining a basic principle of a touch detection scheme in a display panel with a touch detection function according to an embodiment of the present disclosure, and illustrate a state in which there is no touch or approach of a finger.

[0015] Parts (A) and (B) of FIG. **2** are diagrams for explaining the basic principle of the touch detection scheme in the display panel with a touch detection function according to the embodiment of the present disclosure, and illustrate a state in which there is a touch or an approach of the finger.

[0016] Parts (A) and (B) of FIG. **3** are diagrams for explaining the basic principle of the touch detection scheme in the display panel with a touch detection function according to the embodiment of the present disclosure, and illustrate an example of a waveform of a drive signal and an example of a waveform of a touch detection signal, respectively.

[0017] FIG. **4** is a block diagram illustrating a configuration example of a display panel with a touch detection function according to an embodiment of the present disclosure.

[0018] FIG. **5** is a cross-sectional diagram illustrating a schematic sectional structure of a display device with a touch detection function illustrated in FIG. **4**.

[0019] FIG. **6** is a circuit diagram illustrating a pixel arrangement in the display device with a touch detection function illustrated in FIG. **4**.

[0020] FIG. **7** is a perspective diagram illustrating a configuration example of drive electrodes and touch detection electrodes in the display device with a touch detection function illustrated in FIG. **4**.

[0021] FIGS. **8**A to **8**C are schematic diagrams illustrating an operation example of touch detection scanning in the display panel with a touch detection function illustrated in FIG. **4**.

[0022] FIG. **9** is a schematic diagram illustrating an implementation example of the display panel with a touch detection function illustrated in FIG. **4**.

[0023] Parts (A) to (H) of FIG. **10** are timing waveform charts illustrating an operation example of the display panel with a touch detection function illustrated in FIG. **4**.

[0024] Parts (A) to (D) of FIG. **11** are timing waveform charts illustrating an example of touch detection operation in the display panel with a touch detection function illustrated in FIG. **4**.

[0025] Parts (A) to (D) of FIG. **12** are timing waveform charts illustrating another example of the touch detection operation in the display panel with a touch detection function illustrated in FIG. **4**.

[0026] FIGS. **13**A to **13**C are explanatory diagrams each illustrating an example of power supply control in the display panel with a touch detection function illustrated in FIG. **4**.

[0027] FIGS. **14**A and **14**B are schematic diagrams each illustrating an implementation example of the display panel with a touch detection function.

[0028] FIG. **15** is a block diagram illustrating a configuration example of a display panel with a touch detection function according to a modification of the embodiment.

[0029] FIGS. **16**A to **16**C are schematic diagrams illustrating an operation example of touch detection scanning in a display panel a touch detection function according to another modification of the embodiment.

[0030] FIG. **17** is a schematic diagram illustrating an implementation example of a display panel with a touch detection function according to still another modification of the embodiment.

[0031] FIG. **18** is a perspective view illustrating a configuration of an appearance of an application example 1, among display panels each provided with a touch detection function, to which the embodiment is applied.

[0032] FIGS. **19**A and **19**B are perspective views each illustrating a configuration of an appearance of an application example 2.

[0033] FIG. **20** is a perspective view illustrating a configuration of an appearance of an application example 3.

[0034] FIG. **21** is a perspective view illustrating a configuration of an appearance of an application example 4.

[0035] FIGS. **22**A to **22**G are front views, side views, a top view, and a bottom view each illustrating a configuration of an appearance of an application example 5.

[0036] FIG. **23** is a cross-sectional diagram illustrating a schematic sectional structure of a display device with a touch detection function according to a modification.

DETAILED DESCRIPTION OF EMBODIMENT

[0037] An embodiment of the present disclosure will be described below in detail with reference to the drawings. Incidentally, the description will be provided in the following order.

1. Basic Principle of Capacitance-Type Touch Detection

2. Embodiment

3. Application Examples

1. Basic Principle of Capacitance-Type Touch Detection

[0038] At first, with reference to Parts (A) and (B) of each of FIG. **1** to FIG. **3**, there will be described a basic principle of touch detection in a display panel with a touch detection function according to an embodiment of the present disclosure. This touch detection scheme is embodied as a capacitance-type touch sensor, and forms a capacitive element by using, as illustrated in, for example, Part (A) of FIG. **1**, a pair of opposed electrodes (a drive electrode E**1** and a touch detection electrode E**2**) with a dielectric body D in between. This structure is expressed as an equivalent circuit illustrated in Part (B) of FIG. **1**. A capacitive element C**1** is configured by using the drive electrode E**1**, the touch detection electrode E**2**, and the dielectric body D. Of the capacitive element C**1**, one end is connected to an AC-signal source (drive signal source) S, and the other end P is grounded via a resistor R and also connected to a voltage detector (touch detection circuit) DET. When an AC rectangular wave Sg (Part (B) of FIG. **3**) of a predetermined frequency (for example, around several kHz to tens kHz) is applied to the drive electrode E**1** (the one end of the capacitive element C**1**) from the AC-signal source S, an output waveform (a touch detection signal Vdet) as illustrated in Part (A) of FIG. **3** appears in the touch detection electrode E**2** (the other end P of the capacitive element C**1**). It is to be noted that this AC rectangular wave Sg is equivalent to an AC drive signal VcomAC to be described later.

[0039] In a state in which there is no touch (or approach) of a finger, an electric current I**0** according to a capacitance value of the capacitive element C**1** flows, accompanying charge and discharge for the capacitive element C**1**, as illustrated in Parts (A) and (B) of FIG. **1**. An electric potential waveform at the other end P of the capacitive element C**1** at this moment is, for example, like a waveform V**0** in Part (A) of FIG. **3**, and this is detected by the voltage detector DET.

[0040] On the other hand, in a state in which there is a touch (or an approach) of a finger, a capacitive element C**2** formed by the finger is added to the capacitive element C**1** in series, as illustrated in Parts (A) and (B) of FIG. **2**. In this state, currents I**1** and I**2** flow, accompanying charge and discharge for the capacitive elements C**1** and C**2**, respectively. An electric potential waveform at the other end P of the capacitive element C**1** at this moment is, for example, like a waveform V**1** in Part (A) of FIG. **3**, and this is detected by the voltage detector DET. At the time, the electric potential of the point P is a partial pressure potential determined by the values of the currents I**1** and I**2** flowing through the capacitive elements C**1** and C**2**. For this reason, the waveform V**1** is a value smaller than the waveform V**0** in a noncontact state. The voltage detector DET compares the detected voltage with a predeter-

mined threshold voltage Vth, and determines that the noncontact state is established when the detected voltage is equal to or higher than this threshold voltage, and on the other hand, determines that a contact state is established when the detected voltage is lower than this threshold voltage. In this way, the touch detection is enabled.

2. Embodiment

Configuration Example

Overall Configuration Example

[0041] FIG. **4** illustrates a configuration example of a display panel with a touch detection function **1** according to an embodiment of the present disclosure. This display panel with a touch detection function **1** is of a so-called in-cell type, in which a liquid crystal display element is used as a display element, and a liquid crystal display device configured by using the liquid crystal display element and a capacitance-type touch detection device are integrated.

[0042] This display panel with a touch detection function **1** includes a drive section **50**, a gate driver **12**, a display device with a touch detection function **10**, and a touch detection section **40**.

[0043] The drive section **50** drives the display device with a touch detection function **10**. This drive section **50** is integrated to be a chip through, for example, a silicon process, and implemented on a pixel board **2** as a so-called COG (Chip On Glass), as will be described later.

[0044] The drive section **50** includes a display control section **11**, a source driver **13**, a scanning section **51**, a drive electrode driver **52**, and a power control section **53**.

[0045] The display control section **11** is a circuit that supplies a control signal to each of the source driver **13**, the gate driver **12**, and the touch detection section **40**, based on an image signal Vdisp supplied externally, thereby controlling these elements to operate in synchronization with one another. Specifically, the display control section **11** supplies a pixel signal Vsig and a source-driver control signal to the source driver **13**, supplies a gate-driver control signal to the gate driver **12**, and supplies a horizontal synchronization signal Hsync and a vertical synchronization signal Vsync to the touch detection section **40**.

[0046] The source driver **13** generates a pixel signal Vpix based on the pixel signal Vsig and the source-driver control signal supplied from the display control section **11**, and supplies the generated signal to a pixel signal line SGL of the display device with a touch detection function **10**. As will be described later, the pixel signal Vpix supplied to the pixel signal line SGL is written in pixels Pix of one row (one horizontal line) selected by the gate driver **12**, among pixels Pix configured in a matrix in the display device with a touch detection function **10**, and thereby display is performed.

[0047] The scanning section **51** is configured to include a shift register, and generates a plurality of scanning signals based on a TX synchronization signal Vtx supplied from the touch detection section **40**, and supplies the generated signals to the drive electrode driver **52**. As will be described later, the scanning signals respectively correspond to a plurality of drive electrode blocks B (to be described later) driven by the drive electrode driver **52**, and thereby the drive electrode driver **52** sequentially scans and drives these drive electrode blocks B.

[0048] The drive electrode driver **52** is a circuit that supplies a drive signal Vcom to a drive electrode COML (to be described later) of the display device with a touch detection function **10**, based on the scanning signal supplied from the scanning section **51**. Specifically, the drive electrode driver **52** amplifies the scanning signal supplied from the scanning section **51**, and generates the drive signal Vcom by performing impedance conversion. This drive signal Vcom is a signal including a pulse waveform (an AC drive signal VcomAC), and the drive electrode driver **52** applies the AC drive signal VcomAC to the drive electrodes COML in touch detection operation. In display operation, the drive electrode driver **52** applies a DC voltage (a DC drive signal VcomDC) to the drive electrodes COML. A DC voltage of this DC drive signal VcomDC is, for example, 0 V, and a high-level voltage VH of the AC drive signal VcomAC may be set at, for example, 5.5 V. As will be described later, the drive electrode driver **52** drives the drive electrodes COML for each block (the drive electrode block B to be described later) including a predetermined number of drive electrodes COML.

[0049] The power control section **53** controls power supply to each block (the display control section **11**, the source driver **13**, the scanning section **51**, and the drive electrode driver **52**) of the drive section **50**, based on a display source voltage VDDD and a touch-detection source voltage VDDT which have been supplied thereto. In addition, the power control section **53** supplies the touch detection section **40** with a display power flag signal Vpd indicating whether the display source voltage VDDD is supplied. Specifically, the display power flag signal Vpd is a logic signal that is at a high level (e.g., 1.8 V) when the display source voltage VDDD is supplied, and at a low level (0V) when the display source voltage VDDD is not supplied.

[0050] The gate driver **12** has a function of sequentially selecting one horizontal line targeted for display driving of the display device with a touch detection function **10**, based on the gate-driver control signal supplied from the display control section **11**. Specifically, as will be described later, the gate driver **12** generates a scanning signal Vscan based on the control signal supplied from the display control section **11**, and applies the scanning signal Vscan to a gate of a TFT element Tr of the pixel Pix via a scanning signal line GCL, thereby sequentially selecting one row (one horizontal line) of the pixels Pix formed in a matrix in a liquid-crystal display device **20** of the display device with a touch detection function **10**, as a target for the display driving. The gate driver **12** is supplied with the display source voltage VDDD.

[0051] This gate driver **12** is formed on a TFT board **21** of the display device with a touch detection function **10** to be described later. At the time when the TFT element Tr (to be described later) of the liquid-crystal display device **20** is formed, the gate driver **12** is formed using the same process.

[0052] The display device with a touch detection function **10** is a display device with a built-in touch detection function. The display device with a touch detection function **10** has the liquid-crystal display device **20** and a touch detection device **30**. The liquid-crystal display device **20** is, as will be described later, a device that performs display by sequentially scanning the horizontal lines one by one, according to the scanning signal Vscan supplied from the gate driver **12**. The touch detection device **30** operates based on the above-described basic principle of the capacitance-type touch detection, and outputs the touch detection signal Vdet. This touch detection device **30** is, as will be described later, configured to perform sequential scanning according to the AC drive signal

VcomAC supplied from the drive electrode driver **52**, and thereby performing the touch detection.

[0053] The touch detection section **40** is a circuit that detects the presence or absence of a touch event on the touch detection device **30**, based on the touch-detection control signal supplied from the display control section **11** and the touch detection signal Vdet supplied from the touch detection device **30** of the display device with a touch detection function **10**, and when there is a touch event, determines its coordinates or the like in a touch detection region. The touch detection section **40** is supplied with the touch-detection source voltage VDDT.

[0054] This touch detection section **40** has a LPF (Low Pass Filter) section **42**, an A/D conversion section **43**, a signal processing section **44**, a coordinate extraction section **45**, and a touch-detection control section **46**. The LPF section **42** is a low-pass analog filter that removes a high frequency component (noise component) contained in the touch detection signal Vdet supplied from the touch detection device **30**, and extracts and outputs each touch component. The A/D conversion section **43** is a circuit that samples each analog signal outputted from the LPF section **42** at timing synchronized with the AC drive signal VcomAC, and converts the analog signal into a digital signal. The signal processing section **44** is a logical circuit that detects the presence or absence of a touch event on the touch detection device **30**, based on an output signal of the A/D conversion section **43**. The coordinate extraction section **45** is a logical circuit that determines, when the touch event is detected in the signal processing section **44**, its touch-panel coordinates. The touch-detection control section **46** controls the LPF section **42**, the A/D conversion section **43**, the signal processing section **44**, and the coordinate extraction section **45**, to operate in synchronization with one another, based on the horizontal synchronization signal Hsync and the vertical synchronization signal Vsync supplied from the display control section **11**. In addition, the touch-detection control section **46** also has a function of generating the TX synchronization signal Vtx, based on the horizontal synchronization signal Hsync and the vertical synchronization signal Vsync, and supplying the generated signal to the scanning section **51**. This TX synchronization signal Vtx is, for example, a logic signal changing between a low level (e.g., 0 V) and a high-level (e.g., 1.8 V). Specifically, when the display power flag signal Vpd is at a high level, the touch-detection control section **46** generates the TX synchronization signal Vtx, based on the horizontal synchronization signal Hsync and the vertical synchronization signal Vsync supplied from the display control section **11**, and when the display power flag signal Vpd is at a low level, the touch-detection control section **46** generates the TX synchronization signal Vtx by itself.

Display Device with Touch Detection Function **10**

[0055] Next, a configuration example of the display device with a touch detection function **10** will be described in detail.

[0056] FIG. **5** illustrates an example of a cross-sectional structure of a main part in the display device with a touch detection function **10**. This display device with a touch detection function **10** includes the pixel board **2**, an opposite board **3** disposed to face this pixel board **2**, and a liquid crystal layer **6** interposed between the pixel board **2** and the opposite board **3**.

[0057] The pixel board **2** has a TFT board **21** serving as a circuit board, the drive electrodes COML, and pixel electrodes **22**. The TFT board **21** functions as a circuit board where various electrodes, wires, thin film transistors (TFTs), and the like are formed. The TFT board **21** is made of, for example, glass. Formed on the TFT board **21** are the drive electrodes COML. The drive electrode COML is an electrode to supply a voltage common to the pixels Pix (to be described later). This drive electrode COML functions as a common drive electrode for liquid-crystal-display operation, and also functions as a drive electrode for touch detection operation. Formed on the drive electrodes COML is an insulating layer **23**, and the pixel electrodes **22** are formed on the insulating layer **23**. The pixel electrode **22** is an electrode to supply a pixel signal for display, and has translucency. The drive electrode COML and the pixel electrode **22** are made of, for example, ITO (Indium Tin Oxide).

[0058] The opposite board **3** has a glass substrate **31**, a color filter **32**, and touch detection electrodes TDL. The color filter **32** is formed on one surface of the glass substrate **31**. This color filter **32** is configured, for example, by periodically arranging color filter layers of three colors of red (R), green (G), and blue (B), and one set of the three colors of R, G and B is associated with each display pixel. Formed on the other surface of the glass substrate **31** are the touch detection electrodes TDL. The touch detection electrode TDL is an electrode made of, for example, ITO, and has translucency. On this touch detection electrode TDL, a polarizing plate **35** is disposed.

[0059] The liquid crystal layer **6** functions as a display functional layer, and modulates light passing therethrough according to the state of an electric field. This electric field is formed by a potential difference between a voltage of the drive electrode COML and a voltage of the pixel electrode **22**. A liquid crystal in a transverse electric field mode, such as FFS (Fringe Field Switching) and IPS (In Plane Switching) is used in the liquid crystal layer **6**.

[0060] It is to be noted that each of between the liquid crystal layer **6** and the pixel board **2**, and between the liquid crystal layer **6** and the opposite board **3**, an oriented film is disposed, and an incidence-side polarizing plate is disposed on the undersurface side of the pixel board **2**, but the illustration is omitted here.

[0061] FIG. **6** illustrates a configuration example of a pixel structure in the liquid-crystal display device **20**. The liquid-crystal display device **20** has the pixels Pix arranged in a matrix. Each of the pixels Pix is configured to include three subpixels SPix. These three subpixels SPix are arranged to correspond to the three colors (RGB) of the color filter **32** illustrated in FIG. **5**, respectively. The subpixel SPix has the TFT element Tr and a liquid crystal element LC. The TFT element Tr is configured by using a thin-film transistor and, in this example, configured by using an n-channel MOS (Metal Oxide Semiconductor) TFT. Of the TFT element Tr, a source is connected to the pixel signal line SGL, a gate is connected to the scanning signal line GCL, and a drain is connected to one end of the liquid crystal element LC. As for the liquid crystal element LC, one end is connected to the drain of the TFT element Tr, and the other end is connected to the drive electrode COML.

[0062] The subpixel SPix is connected to other subpixels SPix belonging to the same row of the liquid-crystal display device **20**, by the scanning signal line GCL. The scanning signal line GCL is connected to the gate driver **12**, and supplied with the scanning signal Vscan from the gate driver **12**. In addition, the subpixel SPix is connected to other subpixels

SPix belonging to the same column of the liquid-crystal display device **20**, by the pixel signal line SGL. The pixel signal line SGL is connected to the source driver **13**, and supplied with the pixel signal Vpix from the source driver **13**.

[0063] Further, the subpixel SPix is connected to other subpixels SPix belonging to the same row of the liquid-crystal display device **20**, by the drive electrode COML. The drive electrode COML is connected to the drive electrode driver **52**, and supplied with the drive signal Vcom from the drive electrode driver **52**.

[0064] With this configuration, in the liquid-crystal display device **20**, the gate driver **12** drives the scanning signal line GCL to perform the line sequential scanning time-divisionally, and thereby one horizontal line is selected sequentially, and the pixels Pix belonging to the selected one horizontal line are supplied with the pixel signal Vpix from the source driver **13**, and thereby display is performed for every one horizontal line.

[0065] FIG. **7** illustrates a configuration example of the touch detection device **30** perspectively. The touch detection device **30** is configured to include the drive electrodes COML provided at the pixel board **2**, and the touch detection electrodes TDL provided at the opposite board **3**. The drive electrode COML is configured to have stripe-shaped electrode pattern extending in a lateral direction of this figure. When touch detection operation is performed, the AC drive signal VcomAC is sequentially supplied from the drive electrode driver **52** to the electrode pattern, and sequential scanning driving is performed in a time-sharing manner, as will be described later. The touch detection electrode TDL is configured to have stripe-shaped electrode pattern extending in a direction orthogonal to the direction in which the electrode pattern of the drive electrode COML extend. The electrode pattern of the touch detection electrode TDL is connected to the LPF section **42** of the touch detection section **40**. The electrode patterns of the drive electrode COML and the touch detection electrode TDL crossing each other form a capacitance at the intersection.

[0066] By this configuration, in the touch detection device **30**, when the drive electrode driver **52** applies the AC drive signal VcomAC to the drive electrode COML, the touch detection signal Vdet is outputted from the touch detection electrode TDL, and thereby the touch detection is performed. In other words, the drive electrode COML corresponds to the drive electrode E**1**, and the touch detection electrode TDL corresponds to the touch detection electrode E**2**, in the basic principle of the touch detection illustrated in Part (A) of FIG. **1** to Part (B) of FIG. **3**, and thus, the touch detection device **30** detects a touch event in accordance with this basic principle. As illustrated in FIG. **7**, the electrode patterns intersecting each other form the capacitance-type touch sensor in a matrix. Therefore, it is also possible to detect a position where a touch or an approach of an external proximity object has occurred, by scanning an entire touch detection surface of the touch detection device **30**.

[0067] FIGS. **8**A to **8**C schematically illustrate touch detection scanning. FIGS. **8**A to **8**C illustrate operation of applying the AC drive signal VcomAC to each of drive electrode blocks B**1** to B**20**, in a case where a display region/touch detection region includes the twenty drive electrode blocks B**1** to B**20**. A drive-signal-applied block BAC indicates the drive electrode block B to which the AC drive signal VcomAC is applied, and the DC drive signal VcomDC is applied to other drive electrode blocks B. As illustrated in FIGS. **8**A to **8**C, the drive electrode driver **52** sequentially selects the drive electrode block B targeted for the touch detection operation, applies the AC drive signal VcomAC thereto, and scans all the drive electrode blocks B. At the time, as will be described later, the drive electrode driver **52** applies the AC drive signal VcomAC to each of the drive electrode blocks B over a predetermined number of horizontal periods. It is to be noted that, in this example, the number of the drive electrode blocks B is twenty for convenience of description, but is not limited to this number.

Implementation Example of Display Panel with Touch Detection Function **1**

[0068] FIG. **9** schematically illustrates an implementation example of the display panel with a touch detection function **1**. As illustrated in FIG. **9**, the drive section **50** is implemented as the COG on the pixel board **2**, and connected to each of the drive electrode blocks B arranged side by side via a wire L. In this example, the wires L are provided on an upper side and a lower side of the drive electrode blocks B in FIG. **9**, and the drive section **50** is allowed to drive each of the drive electrode blocks B from both sides. Then, the gate driver **12** (**12**A and **12**B) is formed on the TFT board **21** by using a TFT element, and connected to the drive section **50**. In this example, the gate driver **12** is disposed on an upper side (**12**A) and a lower side (**12**B) of the pixel board **2** in FIG. **9**, and is allowed to drive the pixels Pix (not illustrated) disposed in a matrix in a display region Ad, from both sides. Further, the touch detection section **40** is implemented on a flexible printed circuit board T, and connected to each of the touch detection electrodes TDL arranged side by side.

[0069] As illustrated in FIG. **9**, this drive section **50** is disposed on a side (the right side) of the pixel board **2** which is different from the sides where the gate drivers **12**A and **12**B are disposed, in the display panel with a touch detection function **1**. This allows the length of the wire L to be made short, and makes it easy for the drive section **50** to drive the drive electrode block B, compared to a case where the drive section **50** is disposed on the flexible printed circuit board T, for example.

[0070] It is to be noted that, in this example, the wires L are disposed on the upper side and the lower side of the drive electrode blocks B in FIG. **9**, but are not limited to this example, and may be provided only on one of the upper side and the lower side of the drive electrode blocks B. Similarly, in this example, the two gate drivers **12**A and **12**B are provided, but this is not a limitation, and a configuration in which only one of these gate drivers is provided may be adopted.

[0071] Here, the liquid crystal element LC corresponds to a specific example of "display element" in the present disclosure. The AC drive signal VcomAC corresponds to a specific example of "drive signal" in the present disclosure. The scanning section **51** and the drive electrode driver **52** correspond to a specific example of "electrode drive section" in the present disclosure. The display control section **11** and the source driver **13** correspond to a specific example of "display drive section" in the present disclosure. The horizontal synchronization signal Hsync and the vertical synchronization signal Vsync correspond to a specific example of "display synchronization signal" in the present disclosure. The TX

synchronization signal Vtx corresponds to a specific example of "touch-detection synchronization signal" in the present disclosure.

Operation and Function

[0072] Next, there will be described the operation and function of the display panel with a touch detection function **1** in the present embodiment.

[0073] First, a summary of the entire operation of the display panel with a touch detection function **1** will be described with reference to FIG. **4**. Based on the image signal Vdisp supplied externally, the display control section **11** supplies the control signal to each of the gate driver **12**, the source driver **13**, and the touch detection section **40**, thereby controlling these elements to operate in synchronization with one another. The gate driver **12** supplies the scanning signal Vscan to the liquid-crystal display device **20**, thereby sequentially selecting one horizontal line targeted for display driving. The source driver **13** generates the pixel signal Vpix, and supplies the generated signal to each of the subpixels SPix of one horizontal line. The liquid crystal display device **20** of the display device with a touch detection function **10** performs display operation.

[0074] Based on the horizontal synchronization signal Hsync and the vertical synchronization signal Vsync supplied from the display control section **11**, the touch-detection control section **46** of the touch detection section **40** generates the TX synchronization signal Vtx. The scanning section **51** generates the scanning signal based on this TX synchronization signal Vtx, and the drive electrode driver **52** generates the drive signal Vcom based on this scanning signal and supplies the generated signal to the drive electrode COML of the touch detection device **30** in the display device with a touch detection function **10**. Based on the drive signal Vcom, the touch detection device **30** outputs the touch detection signal Vdet from the touch detection electrode TDL. The LPF section **42** of the touch detection section **40** removes the high frequency component (noise component) contained in the touch detection signal Vdet, and extracts and outputs the touch component. The A/D conversion section **43** converts the analog signal outputted from the LPF section **42** into the digital signal. The signal processing section **44** detects the presence or absence of a touch event on the display device with a touch detection function **10**, based on the output signal of the A/D conversion section **43**. When the touch detection is performed in the signal processing section **44**, the coordinate extraction section **45** determines its touch-panel coordinates.

[0075] The power control section **53** of the drive section **50** controls the power supply to each of the blocks in the drive section **50**, based on the display source voltage VDDD and the touch-detection source voltage VDDT supplied thereto.

Detailed Operation

[0076] Next, detailed operation of the display panel with a touch detection function **1** will be described.

[0077] Parts (A) to (H) of FIG. **10** illustrate timing waveform examples of the display panel with a touch detection function **1**, namely, Part (A) indicates a waveform of the vertical synchronization signal Vsync, Part (B) indicates a waveform of the horizontal synchronization signal Hsync, Part (C) indicates waveforms of the scanning signal Vscan, Part (D) indicates a waveform of the pixel signal Vsig, Part (E) indicates waveforms of the pixel signal Vpix, Part (F) indicates a waveform of the TX synchronization signal Vtx, Part (G) indicates a waveform of the drive signal Vcom, and Part (H) indicates a waveform of the touch detection signal Vdet.

[0078] In the display panel with a touch detection function **1**, the touch detection operation and the display operation are carried out in each one horizontal period (**1**H). In the display operation, the gate driver **12** sequentially applies the scanning signal Vscan to the scanning signal line GCL, thereby performing the display scanning In the touch detection operation, the drive electrode driver **52** sequentially applies the AC drive signal VcomAC to each of the drive electrode blocks B, thereby performing the touch detection scanning, and the touch detection section **40** detects the touch event based on the touch detection signal Vdet outputted from the touch detection electrode TDL. The details will be described below.

[0079] First, at timing t**0**, the display control section **11** generates a pulse as the horizontal synchronization signal Hsync, and supplies the generated pulse to the touch-detection control section **46** (Part (B) of FIG. **10**). As a result, one horizontal period begins. Further, at this timing t**0**, the display control section **11** generates a pulse having a width corresponding to the one horizontal period, and supplies this pulse to the touch-detection control section **46** similarly (Part (A) of FIG. **10**). In other words, in this example, one frame period (**1**F) starts at the timing t**0**.

[0080] Next, in a period of timings t**1** to t**2**, the touch-detection control section **46** generates a pulse as the TX synchronization signal Vtx (Part (F) of FIG. **10**). In response to this, the scanning section **51** of the drive section **50** selects the drive electrode block B related to the touch detection operation (here, the kth drive electrode block B(k)), and generates a pulse as the scanning signal corresponding to the drive electrode block B(k). The drive electrode driver **52** amplifies this scanning signal, and also performs the impedance conversion, thereby generating and applying a pulse (the AC drive signal VcomAC) as the drive signal Vcom (B(k)) to the drive electrode block B(k) (Part (G) of FIG. **10**). This AC drive signal VcomAC is transmitted to the touch detection electrode TDL through the capacitance, and the touch detection signal Vdet changes (Part (H) of FIG. **10**). Then, at sampling timing ts, the A/D conversion section **43** of the touch detection section **40** performs A/D conversion of the output signal of the LPF section **42** to which this touch detection signal Vdet has been inputted (Part (H) of FIG. **10**). The signal processing section **44** of the touch detection section **40** performs the touch detection, based on a result of this A/D conversion collected over a plurality of horizontal periods, as will be described later.

[0081] Next, at timing t**3**, the gate driver **12** applies the scanning signal Vscan to the scanning signal line GCL(n) in the nth row related to the display operation, and the scanning signal Vscan(n) changes from a low level to a high level (Part (C) of FIG. **10**). Then, the source driver **13** applies the pixel signal Vpix to the pixel signal line SGL (Part (E) of FIG. **10**), and the display of the pixels Pix of the one horizontal line related to the scanning signal line GCL(n) in the nth row is performed.

[0082] Specifically, at first, the gate driver **12** changes the scanning signal Vscan(n) from the low level to the high level at the timing t**3**, thereby selecting the one horizontal line related to the display operation. Then, the display control section **11** supplies the source driver **13** with a pixel voltage VR for a red subpixel SPix, as the pixel signal Vsig (Part (D) of FIG. **10**). The source driver **13** separates the pixel voltage VR supplied by the display control section **11**, from the pixel signal Vsig, and supplies the pixel voltage VR as a pixel signal VpixR to the red subpixel SPix related to the one horizontal

line, through the pixel signal line SGL (Part (E) of FIG. **10**). Similarly, the display control section **11** supplies the source driver **13** with a pixel voltage VG for a green subpixel SPix as the pixel signal Vsig (Part (D) of FIG. **10**), and the source driver **13** separates this pixel voltage VG from the pixel signal Vsig, and supplies the pixel voltage VG as a pixel signal VpixG to a green subpixel SPix related to the one horizontal line (Part (E) of FIG. **10**). Afterwards, similarly, the display control section **11** supplies the source driver **13** with a pixel voltage VB for a blue subpixel SPix (Part (D) of FIG. **10**), and the source driver **13** separates this pixel voltage VB from the pixel signal Vsig, and supplies the pixel voltage VB as a pixel signal VpixB to a blue subpixel SPix related to the one horizontal line (Part (E) of FIG. **10**).

[0083] Next, at timing t**4**, the gate driver **12** changes the scanning signal Vscan(n) of the scanning signal line GCL in the nth row from the high level to the low level (Part (C) of FIG. **10**). This electrically isolates the subpixel SPix of the one horizontal line related to the display operation, from the pixel signal line SGL.

[0084] Afterwards, in the display panel with a touch detection function **1**, by repeating the operation described above, the display operation in the entire display screen is performed by the line-sequential scanning, and also the touch detection operation in the entire touch detection region is carried out by performing the scanning for each of the drive electrode blocks B, as will be described below.

[0085] Parts (A) to (D) of FIG. **11** illustrate an operation example of the touch detection scanning, namely, Part (A) illustrates a waveform of the vertical synchronization signal Vsync, Part (B) illustrates a waveform of the TX synchronization signal Vtx, Part (C) illustrates waveforms of the drive signal Vcom, and Part (D) illustrates a waveform of the touch detection signal Vdet.

[0086] As illustrated in Parts (A) to (D) of FIG. **11**, the drive electrode driver **52** generates the AC drive signal VcomAC synchronized with the TX synchronization signal Vtx, and sequentially applies the generated AC drive signal VcomAC to each of the drive electrode blocks B, thereby performing the touch detection scanning for the drive electrode COML. At the time, the drive electrode driver **52** applies the AC drive signal VcomAC to each of the drive electrode blocks B over a predetermined number of horizontal periods (Part (C) of FIG. **11**). The touch detection device **30** outputs the touch detection signal Vdet based on this AC drive signal VcomAC, in each of the one horizontal periods (Part (D) of FIG. **11**), and the touch detection section **40** samples this touch detection signal Vdet. In the touch detection section **40**, after the sampling in the last one of the predetermined number of horizontal periods is finished, the signal processing section **44** detects the presence or absence of the touch event in a region corresponding to the drive electrode block B, based on the plurality of sampling results. In this way, the touch detection is performed based on the plurality of sampling results and thus, it is possible to analyze the sampling results statistically, suppress deterioration of the S/N ratio caused by variation of the sampling results, and enhance accuracy of the touch detection.

[0087] In the display panel with a touch detection function **1**, the scanning section **51** and the drive electrode driver **52** related to the touch detection operation are integrated together with the display control section **11** and the source driver **13** related to the display operation, and formed as one chip. An effect of this integration will be described below.

Multifunctionality

[0088] In the display panel with a touch detection function **1**, the scanning section **51** and the drive electrode driver **52** are integrated to be the chip and thus, it is possible to form a more multifunctional circuit. In other words, for example, in a case where the scanning section **51** and the drive electrode driver **52** are formed on the TFT board **21** of the display device with a touch detection function **10** by using the same process as that of the TFT element Tr like the gate driver **12**, processing accuracy is, for example, 3 [um] which is low, and therefore, the circuit area is large. On the other hand, in the case where the scanning section **51** and the drive electrode driver **52** are made to be one chip through a silicon process and the like, and implemented as a COG, processing accuracy is, for example, 80 [nm] which is high, and therefore, it is possible to make the circuit area smaller. In other words, in the case where the scanning section **51** and the drive electrode driver **52** are formed using the same process as that of the TFT element Tr, it is difficult to form a multifunctional circuit because of a limitation in terms of circuit area, but providing them as one chip makes it possible to form more circuits per unit area and thus allows implementation of a multifunctional circuit.

[0089] This achievement of multifunctionality allows, for example, more complicated touch detection scanning and more intricate power supply control, in the display panel with a touch detection function **1**. An example thereof will be described below in detail.

[0090] Parts (A) to (D) of FIG. **12** illustrate an example of more complicated touch detection scanning, namely, Part (A) illustrates a waveform of the vertical synchronization signal Vsync, Part (B) illustrates a waveform of the TX synchronization signal Vtx, Part (C) illustrates waveforms of the drive signal Vcom, and Part (D) illustrates a waveform of the touch detection signal Vdet.

[0091] In this example, the drive electrode driver **52** applies the AC drive signal VcomAC only to the odd-numbered drive electrode blocks B (B(**1**), B(**3**), B(**5**), . . .). This makes it possible to detect whether a touch is made in the touch detection region, in a short time. In other words, in Parts (A) to (D) of FIG. **11**, it is possible to determine the position of the touch event in the touch detection region specifically, by sequentially driving all the drive electrode blocks B, and in this example (Parts (A) to (D) of FIG. **12**), it is possible to detect only whether a touch is merely made, by sequentially driving only the odd-numbered drive electrode blocks B among all the drive electrode blocks B.

[0092] The touch detection scanning as illustrated in Parts (A) to (D) of FIG. **12** may not be realized by, for example, merely changing the waveform of a signal inputted into the shift register, in the scanning section **51** configured to perform the touch detection scanning in Parts (A) to (D) of FIG. **11**. In other words, in order to perform both the scanning in Parts (A) to (D) of FIG. **11** and the scanning in Parts (A) to (D) of FIG. **12**, addition of a circuit dedicated to achieve multifunctionality is desired. In the display panel with a touch detection function **1**, the scanning section **51** and the drive electrode driver **52** are integrated and formed as the chip and thus, such multifunctionality may be realized with a small circuit area.

[0093] FIGS. **13**A to **13**C each illustrate an example of the power supply control, namely, FIG. **13**A illustrates a case in which both the display operation and the touch detection operation are performed, FIG. **13**B illustrates a case in which only the display operation is performed, and FIG. **13**C illustrates a case in which only the touch detection operation is performed. In FIGS. **13**A to **13**C, blocks made in solid lines each indicate a block supplied with power, and blocks made in dashed lines each indicate a block supplied with no power.

[0094] As illustrated in FIG. **13**A, when both the display source voltage VDDD and the touch-detection source voltage VDDT are supplied, the power control section **53** of the drive section **50** performs power supply to each of the blocks (the display control section **11**, the source driver **13**, the scanning section **51**, and the drive electrode driver **52**) in the drive section **50**. This makes the display panel with a touch detection function **1** perform the display operation and the touch detection operation as described above.

[0095] Further, as illustrated in FIG. **13**B, when only the display source voltage VDDD is supplied, the power control section **53** performs power supply to the display control section **11**, the source driver **13**, and the drive electrode driver **52** among the blocks in the drive section **50**. At the time, the drive electrode driver **52** supplies the DC drive signal VcomDC to all the drive electrodes COML. In other words, the drive electrode driver **52** does not apply the AC drive signal VcomAC to the drive electrodes COML. Then, the source driver **13** supplies the pixel signal Vpix to one horizontal line selected by the gate driver **12**. In this way, the display panel with a touch detection function **1** performs only the display operation in this case.

[0096] Furthermore, as illustrated in FIG. **13**C, when only the touch-detection source voltage VDDT is supplied, the power control section **53** performs power supply to the scanning section **51** and the drive electrode driver **52** among the blocks in the drive section **50**. At the time, the power control section **53** generates the display power flag signal Vpd at a low level, and supplies this signal to the touch-detection control section **46** of the touch detection section **40**. Then, the touch-detection control section **46** generates the TX synchronization signal Vtx by itself, and supplies this signal to the scanning section **51**. This causes the scanning section **51** and the drive electrode driver **52** to generate the drive signal Vcom, and supply this signal to the drive electrode COML. Then, the touch detection section **40** detects a touch event based on the touch detection signal Vdet according to this drive signal Vcom. In this way, the display panel with a touch detection function **1** performs only the touch detection operation in this case.

[0097] In this way, in the display panel with a touch detection function **1**, the power control section **53** is provided in the drive section **50**, and a function of controlling power supply is built therein and therefore, the power supply control according to its use and the like is allowed, making it possible to reduce power consumption.

Reduction in Frame Region

[0098] Next, a reduction in a frame region of the display panel with a touch detection function **1** will be described in comparison with a comparative example. A display panel with a touch detection function **1**R according to this comparative example is configured by forming a scanning section and a drive electrode driver on a TFT board **21** of a display device with a touch detection function **10**, by using the same process as that of a TFT element Tr, not as a chip of the drive section **50**. Otherwise, the display panel with a touch detection function **1**R is similar in configuration to the present embodiment (FIG. **4**).

[0099] FIG. **14**A schematically illustrates an implementation example of the display panel with a touch detection function **1** according to the present embodiment, and FIG **14**B schematically illustrates an implementation example of the display panel with a touch detection function **1**R according to the comparative example.

[0100] The display panel with a touch detection function **1**R includes a drive section **50**R, a scanning section **51**R (**51**RA and **51**RB), and a drive electrode driver **52**R (**52**RA and **52**RB) as illustrated in FIG. **14**B. The drive section **50**R is configured by removing the scanning section **51** and the drive electrode driver **52** from the drive section **50** of the present embodiment. The scanning section **51**R and the drive electrode driver **52**R are circuits having functions equivalent to those of the scanning section **51** and the drive electrode driver **52** according to the present embodiment, and formed on the TFT board **21** of the display device with a touch detection function **10**, by using the same process as that of the TFT element Tr. In this example, the scanning section **51**RA and the drive electrode driver **52**RA are formed between drive electrode blocks B and a gate driver **12**A, and the scanning section **51**RB and the drive electrode driver **52**RB are formed between the drive electrode blocks B and a gate driver **12**B. It is to be noted that this configuration corresponds to FIG. **15** of Japanese Unexamined Patent Application Publication No. 2009-258182. In other words, it is conceivable that in this figure, a Vcom drive circuit **9** is formed on a TFT board, using the same process as that of a TFT element.

[0101] As illustrated in FIG. **14**B, in the display panel with a touch detection function **1**R, the scanning section **51**R and the drive electrode driver **52**R are formed using the same process as that of the TFT element Tr in a manner similar to the gate driver **12**, and therefore, its processing accuracy is low, resulting in a large circuit area. Thus, a width d (a width in a vertical direction in FIGS. **14**A and **14**B) of the display panel with a touch detection function **1**R is large, as compared to the case of the present embodiment (FIG. **14**A). In other words, in the display panel with a touch detection function **1**R, a region (a frame region) outside a display region Ad is larger than that in the case of the present embodiment (FIG. **14**A). Therefore, this may, for example, increase the size of an electronic unit provided with this display panel with a touch detection function **1**R, or reduce flexibility in design of the electronic unit.

[0102] On the other hand, in the display panel with a touch detection function **1** according to the present embodiment, the scanning section **51** and the drive electrode driver **52** are integrated and formed as the chip. Therefore, the processing accuracy is high and thus, it is possible to make the circuit area small, and reduce the frame region as illustrated in FIG. **14**A. This makes it possible to, for example, reduce the size of an electronic unit provided with the display panel with a touch detection function **1**, or increase flexibility in design of the electronic unit.

Effects

[0103] As described above, in the present embodiment, the scanning section and the drive electrode driver are integrated to be provided as the one chip and thus, it is possible to realize a multifunctional circuit. This allows, for example, more complicated touch detection scanning, and more intricate power supply control.

[0104] In addition, in the present embodiment, since the scanning section and the drive electrode driver are integrated to be the one chip, and disposed on the side different from the

side where the gate driver is disposed, it is possible to shorten the width of the display panel with a touch detection function, and reduce the frame region.

[0105] Further, in the present embodiment, the drive electrode driver is disposed near the drive electrode blocks and thus, it is possible to make the driving of the drive electrode blocks easy.

Modification 1-1

[0106] In the embodiment described above, the display source voltage VDDD and the touch-detection source voltage VDDT are supplied separately to each of the blocks of the display panel with a touch detection function **1**, but this is not a limitation. Instead, for example, a common source voltage VDD may be supplied. This example will be described below in detail.

[0107] FIG. **15** illustrates a configuration example of a display panel with a touch detection function **1**B according to the present modification. The display panel with a touch detection function **1**B includes a drive section **50**B and a touch detection section **40**B. In the display panel with a touch detection function **1**B, a single source voltage VDD is supplied externally and distributed to each block.

[0108] The drive section **50**B has a power control section **53**B. The power control section **53**B controls power supply to each block (a display control section **11**, a source driver **13**, a scanning section **51**, and a drive electrode driver **52**) of the drive section **50**B based on a power-supply control signal Vpow. Specifically, for example, the power-supply control signal Vpow controls the power supply to each block as in FIG. **13**C when being a signal of ordering both display operation and touch detection operation, controls the power supply to each block as in FIG. **13**B when being a signal of ordering only the display operation, and controls the power supply to each block as in FIG. **13**C when being a signal of ordering only the touch detection operation. Further, the power control section **53**B supplies the touch detection section **40**B with a display power flag signal Vpd indicating whether the source voltage is supplied to the block (the display control section **11** and the source driver **13**) related to the display operation, and also supplies the touch detection section **40**B with a touch-detection power flag signal Vpt indicating whether the source voltage is supplied to the block (the scanning section **51**) related to the touch detection operation. Specifically, this touch-detection power flag signal Vpt is a logic signal that is at a high level (e.g., 1.8 V) when the source voltage is supplied to the block related to the touch detection operation, and at a low level (0 V) when the source voltage is not supplied to this block.

[0109] The touch detection section **40**B has a touch-detection control section **46**B. Like the touch-detection control section **46** according to the above-described embodiment, the touch-detection control section **46**B controls a LPF section **42**, an A/D conversion section **43**, a signal processing section **44**, and a coordinate extraction section **45** to operate in synchronization with one another, based on a horizontal synchronization signal Hsync and a vertical synchronization signal Vsync, and also generates and supplies a TX synchronization signal Vtx to the scanning section **51**. In addition, the touch-detection control section **46**B also has a function of stopping the power supply to the LPF section **42**, the A/D conversion section **43**, the signal processing section **44**, and the coordinate extraction section **45**, when the touch-detection power flag signal Vpt is at the low level.

[0110] In this case as well, it is possible to realize a reduction in power consumption, by causing the power control section **53**B to perform the power supply control based on the power-supply control signal Vpow, in the display panel with a touch detection function **1**B.

Modification 1-2

[0111] In the above-described embodiment, the drive electrodes COML are driven and scanned for each of the drive electrode blocks B each including the predetermined number of drive electrodes COML, but this is not a limitation. Instead, for example, a predetermined number of drive electrodes COML may be driven simultaneously, and scanned by shifting through the drive electrodes COML one by one. The details will be described below.

[0112] FIGS. **16**A to **16**C schematically illustrate an operation example of a drive electrode driver **52**C according to the present modification. The drive electrode driver **52**C applies an AC drive signal VcomAC to a predetermined number of drive electrodes COML simultaneously. Specifically, the drive electrode driver **52**C applies the AC drive signal VcomAC to the predetermined number (five, in this case) of drive electrodes COML simultaneously (a drive-signal-applied electrode LAC). Then, the drive electrode driver **52**C performs touch detection scanning by shifting through one by one the drive electrodes COML to which the AC drive signal VcomAC is applied. It is to be noted that, in this example, the AC drive signal VcomAC is applied to the five drive electrodes COML simultaneously, but is not limited to this example. Instead, the AC drive signal VcomAC may be applied to four or less, or six or more drive electrodes COML simultaneously. Further, in this example, the scanning is performed by shifting through one by one the drive electrodes COML to which the AC drive signal VcomAC is applied, but this is not a limitation. Instead, shifting for every two or more may be performed.

Modification 1-3

[0113] In the embodiment described above, the touch detection section **40** and the drive section **50** are integrated into separate chips, but are not limited to this example. Instead, for example, as illustrated in FIG. **17**, the touch detection section **40** and the drive section **50** may be integrated into the same chip.

Other Modifications

[0114] In the above-described embodiment, the drive electrode block B is configured to include the plurality of drive electrodes COML, but is not limited to this example. Instead, for example, the plurality of drive electrodes COML may be formed to be thick by being integrated, and this may be driven as the drive electrode block B.

3. Application Examples

[0115] Next, with reference to FIG. **18** to FIG. **22**G, there will be described application examples of the display panel with a touch detection function in each of the above-described embodiment and modifications. The display panel with a touch detection function in each of the embodiment and the like may be applied to electronic units in various fields, such as television receivers, digital cameras, laptop computers, portable terminal devices such as portable telephones, and video cameras. In other words, it is possible to apply the display panel with a touch detection function in each of the embodiment and the like to electronic units in various fields,

which display externally-input image signals or internally-generated image signals as still or moving images.

Application Example 1

[0116] FIG. **18** illustrates an external view of a television receiver to which the display panel with a touch detection function in any of the embodiment and the like is applied. This television receiver has, for example, an image display screen section **510** that includes a front panel **511** and a filter glass **512**, and this video display screen section **510** is configured using the display panel with a touch detection function according to any of the embodiment and the like.

Application Example 2

[0117] FIGS. **19**A and **19**B each illustrate an external view of a digital camera to which the display panel with a touch detection function in any of the embodiment and the like is applied. This digital camera includes, for example, a flash emitting section **521**, a display section **522**, a menu switch **523**, and a shutter release **524**, and the display section **522** is configured using the display panel with a touch detection function according to any of the embodiment and the like.

Application Example 3

[0118] FIG. **20** illustrates an external view of a laptop computer to which the display panel with a touch detection function in any of the embodiment and the like is applied. This laptop computer includes, for example, a main section **531**, a keyboard **532** for entering characters and the like, and a display section **533** that displays an image. The display section **533** is configured using the display panel with a touch detection function according to any of the embodiment and the like.

Application Example 4

[0119] FIG. **21** illustrates an external view of a video camera to which the display panel with a touch detection function in any of the embodiment and the like is applied. This video camera includes, for example, a main section **541**, a lens **542** disposed on a front face of this main section **541** to shoot an image of a subject, a start/stop switch **543** used at the time of shooting, and a display section **544**. The display section **544** is configured using the display panel with a touch detection function according to any of the embodiment and the like.

Application Example 5

[0120] FIGS. **22**A to **22**G illustrate external views of a portable telephone to which the display panel with a touch detection function in any of the embodiment and the like is applied. This portable telephone is, for example, a device in which an upper housing **710** and a lower housing **720** are connected by a coupling section (hinge section) **730**, and includes a display **740**, a sub-display **750**, a picture light **760**, and a camera **770**. The display **740** or the sub-display **750** is configured using the display panel with a touch detection function according to any of the embodiment and the like.

[0121] Up to this point, the present technology has been described by using the embodiment and modifications, as well as the application examples of electronic units, but is not limited to these embodiment and the like, and may be variously modified.

[0122] For example, in the embodiment and the like, the liquid crystal display device configured by using the liquid crystal in the transverse electric field mode such as FFS and IPS, and the touch detection device are integrated. However, instead, a liquid crystal display device using a liquid crystal in various modes such as TN (Twisted Nematic), VA (Vertical Alignment), and ECB (Electrically Controlled Birefringence), and a touch detection device may be integrated. When such a liquid crystal is used, the display device with a touch detection function may be configured as illustrated in FIG. **23**. FIG **23** illustrates an example of a cross-sectional structure of a main part in a display device with a touch detection function **10**E according to the present modification, and illustrates a state in which a liquid crystal layer **6**B is held between a pixel board **2**B and an opposite board **3**B. Names, functions, and the like of all other elements are similar to those in the case of FIG. **5** and thus, the description will be omitted. In this example, unlike the case of FIG. **5**, drive electrodes COML used for both display and touch detection are formed on the opposite board **3**B.

[0123] Further, for example, in each of the embodiment and the like, there is employed the so-called in-cell type in which the liquid crystal display device and the capacitance-type touch detection device are integrated, but this is not a limitation. Instead, for example, there may be employed a so-called on-cell type in which a capacitance-type touch detection device is formed on a surface of a liquid crystal display device.

[0124] Furthermore, for example, in each of the embodiment and the like, the touch detection device is of capacitance type, but is not limited thereto, and may be of, for example, optical type or resistive type, instead.

[0125] Moreover, for example, in each of the embodiment and the like, the display element is the liquid crystal element, but is not limited thereto, and may be, for example, an EL (Electro Luminescence) element.

[0126] It is to be noted that the present technology may be configured as follows.

[0127] (1) A display panel with a touch detection function, the display panel including:

[0128] one or more display elements;

[0129] one or more drive electrodes extending in one direction;

[0130] an electrode drive section integrated into a chip, and applying a drive signal to the drive electrodes; and

[0131] one or more touch detection electrodes extending in a direction intersecting the direction in which the drive electrodes extend.

[0132] (2) The display panel according to (1), further including

[0133] a display drive section driving the display elements,

[0134] wherein the display drive section is integrated together with the electrode drive section.

[0135] (3) The display panel according to (2), wherein the electrode drive section applies a drive signal to the drive electrodes, based on a display synchronization signal supplied from the display drive section.

[0136] (4) The display panel according to (3), further including

[0137] a touch-detection control section controlling touch detection operation,

[0138] wherein the touch-detection control section generates a touch-detection synchronization signal based on the display synchronization signal, and

[0139] the electrode drive section applies the drive signal to the drive electrodes, based on the touch-detection synchronization signal.

[0140] (5) The display panel according to (4), wherein the touch-detection control section is integrated together with the electrode drive section.

[0141] (6) The display panel according to any one of (1) to (5), wherein a capacitance is formed between each of the drive electrodes and each of the touch detection electrodes, and

[0142] a detection signal according to the drive signal applied to the drive electrodes is outputted from the touch detection electrode.

[0143] (7) The display panel according to any one of (1) to (6), wherein the electrode drive section performs scanning by sequentially selecting one or more electrodes to be driven out of the drive electrodes, and applies the drive signal to the electrode to be driven.

[0144] (8) The display panel according to (7), wherein the electrode drive section has a plurality of scanning modes whose methods of sequentially selecting the electrode to be driven are different from each other.

[0145] (9) The display panel according to any one of (2) to (5), further including

[0146] a power control section controlling power supply to the electrode drive section and the display drive section, and integrated together with the electrode drive section.

[0147] (10) A display panel with a touch detection function, the display panel including:

[0148] one or more display elements;

[0149] one or more touch detection elements; and

[0150] a drive section integrated into a chip, and driving the one or more touch detection elements.

[0151] (11) A drive circuit including:

[0152] a display drive section driving one or more display elements; and

[0153] an electrode drive section integrated into a chip, and applying a drive signal to one or more drive electrodes that extend in a direction intersecting a direction in which one or more touch detection electrodes extend.

[0154] (12) An electronic unit including a display panel with a touch detection function and a control section performing operation control using the display panel, the display panel including:

[0155] one or more display elements;

[0156] one or more drive electrodes extending in a direction;

[0157] an electrode drive section integrated into a chip, and applying a drive signal to the drive electrodes; and

[0158] one or more touch detection electrodes extending in a direction intersecting the direction in which the drive electrodes extend.

[0159] The present disclosure contains subject matter related to that disclosed in Japanese Priority Patent Application JP 2011-089430 filed in the Japan Patent Office on Apr. 13, 2011, the entire content of which is hereby incorporated by reference.

[0160] It should be understood by those skilled in the art that various modifications, combinations, sub-combinations and alterations may occur depending on design requirements and other factors insofar as they are within the scope of the appended claims or the equivalents thereof.

What is claimed is:

1. A display panel with a touch detection function, the display panel comprising:
- one or more display elements;
- one or more drive electrodes extending in one direction;
- an electrode drive section integrated into a chip, and applying a drive signal to the drive electrodes; and
- one or more touch detection electrodes extending in a direction intersecting the direction in which the drive electrodes extend.

2. The display panel according to claim **1**, further comprising
- a display drive section driving the display elements,
- wherein the display drive section is integrated together with the electrode drive section.

3. The display panel according to claim **2**, wherein the electrode drive section applies a drive signal to the drive electrodes, based on a display synchronization signal supplied from the display drive section.

4. The display panel according to claim **3**, further comprising
- a touch-detection control section controlling touch detection operation,
- wherein the touch-detection control section generates a touch-detection synchronization signal based on the display synchronization signal, and
- the electrode drive section applies the drive signal to the drive electrodes, based on the touch-detection synchronization signal.

5. The display panel according to claim **4**, wherein the touch-detection control section is integrated together with the electrode drive section.

6. The display panel according to claim **1**, wherein a capacitance is formed between each of the drive electrodes and each of the touch detection electrodes, and
- a detection signal according to the drive signal applied to the drive electrodes is outputted from the touch detection electrode.

7. The display panel according to claim **1**, wherein the electrode drive section performs scanning by sequentially selecting one or more electrodes to be driven out of the drive electrodes, and applies the drive signal to the electrode to be driven.

8. The display panel according to claim **7**, wherein the electrode drive section has a plurality of scanning modes whose methods of sequentially selecting the electrode to be driven are different from each other.

9. The display panel according to claim **2**, further comprising
- a power control section controlling power supply to the electrode drive section and the display drive section, and integrated together with the electrode drive section.

10. A display panel with a touch detection function, the display panel comprising:
- one or more display elements;
- one or more touch detection elements; and
- a drive section integrated into a chip, and driving the one or more touch detection elements.

11. A drive circuit comprising:
- a display drive section driving one or more display elements; and
- an electrode drive section integrated into a chip, and applying a drive signal to one or more drive electrodes that extend in a direction intersecting a direction in which one or more touch detection electrodes extend.

12. An electronic unit including a display panel with a touch detection function and a control section performing operation control using the display panel, the display panel comprising:
- one or more display elements;
- one or more drive electrodes extending in a direction;
- an electrode drive section integrated into a chip, and applying a drive signal to the drive electrodes; and
- one or more touch detection electrodes extending in a direction intersecting the direction in which the drive electrodes extend.

* * * * *