US 20150021565A1

(19) United States

(12) Patent Application Publication

Min et al.

(10) Pub. No.: US 2015/0021565 A1

(43) Pub. Date: Jan. 22, 2015

(54) **ORGANIC LIGHT-EMTTING DISPLAY APPARATUS AND METHOD OF MANUFACTURING SAME**

(71) Applicant: **Samsung Display Co., Ltd.**, Yongin-City (KR)

(72) Inventors: **Kyung-Soo Min**, Yongin-City (KR); **Yeon-Heok You**, Yongin-City (KR); **Dong-Wook Kang**, Yongin-City (KR)

(73) Assignee: **Samsung Display Co., Ltd.**, Yongin-City (KR)

(21) Appl. No.: **14/108,147**

(22) Filed: **Dec. 16, 2013**

(30) **Foreign Application Priority Data**

Jul. 22, 2013 (KR) 10-2013-0086253

Publication Classification

(51) **Int. Cl.**

H01L 27/32 (2006.01)

H01L 51/52 (2006.01)

(52) **U.S. Cl.**

CPC ***H01L 27/3244*** (2013.01); ***H01L 51/5253*** (2013.01)

USPC **257/40**; 438/28

(57) **ABSTRACT**

An organic light-emitting display apparatus including: a substrate; a display unit having a plurality of organic light-emitting devices on the substrate; an encapsulating layer sealing up the display unit; and a protective layer between the display unit and the encapsulating layer, wherein each of the plurality of organic light-emitting devices includes: a pixel electrode; an intermediate layer on the pixel electrode, the intermediate layer including an organic emission layer; and an opposite electrode on the intermediate layer, and the protective layer includes: a capping layer covering the opposite electrode; and a blocking layer on the capping layer.

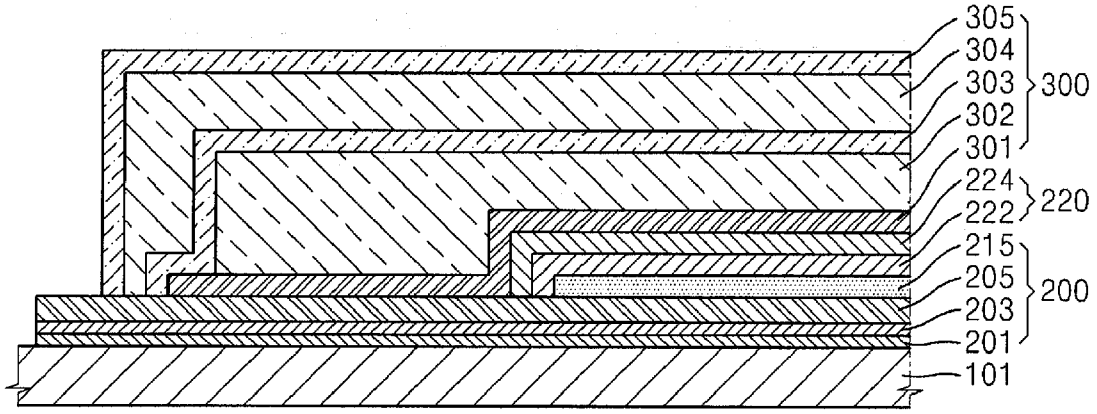

FIG. 1

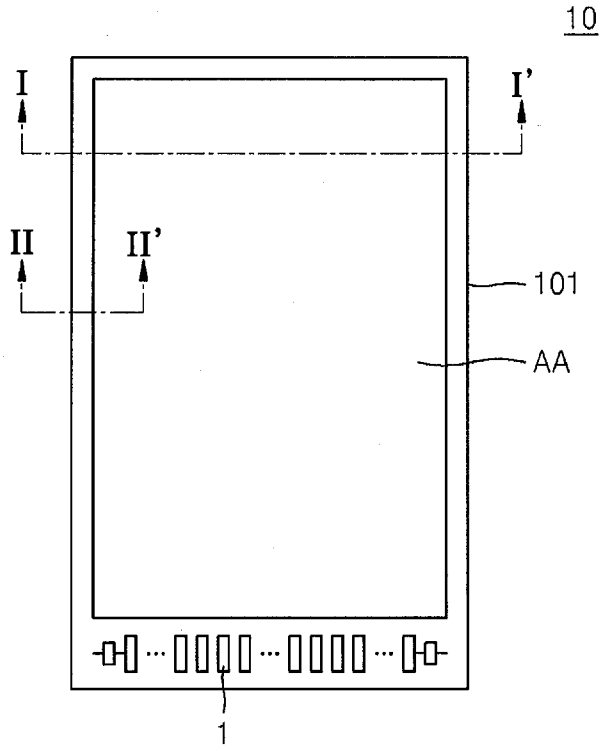

FIG. 2

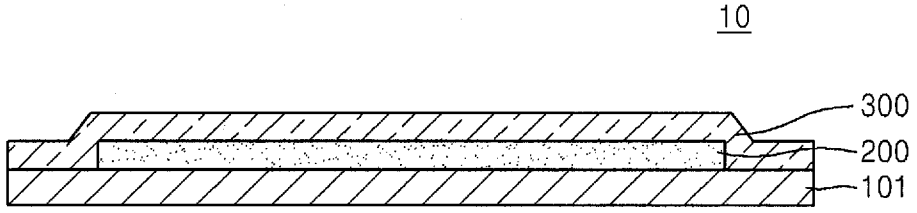

FIG. 3

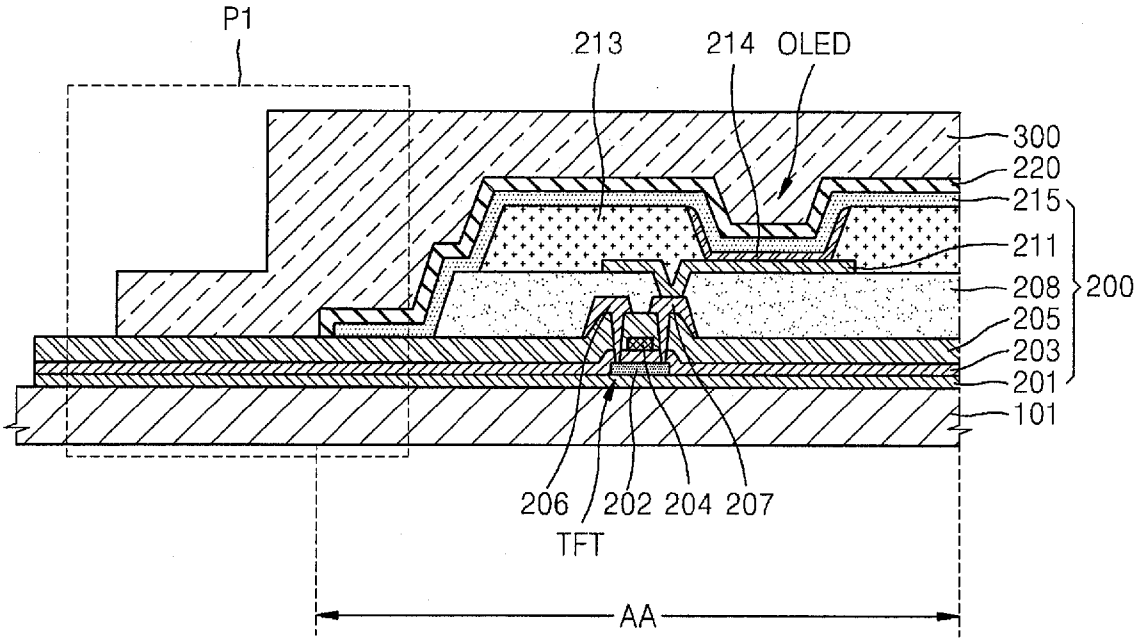
P1
213
214
OLED
300
220
215
211
208
200
205
203
201
101
206
202
204
207
TFT
AA

FIG. 4

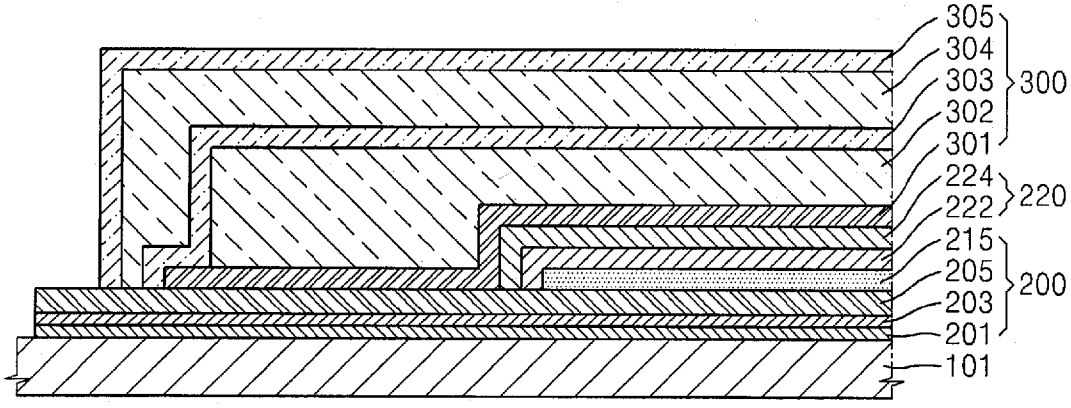
305
304
303
300
302
301
224
220
222
215
205
200
203
201
101

FIG. 5

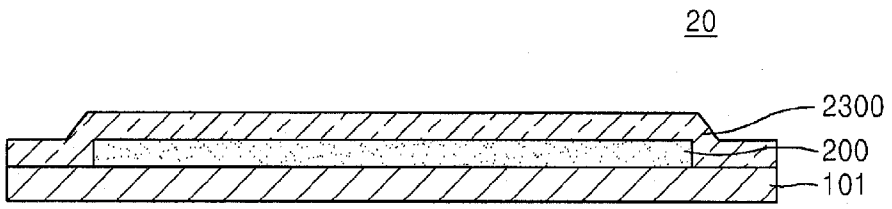
20
2300
200
101

FIG. 6

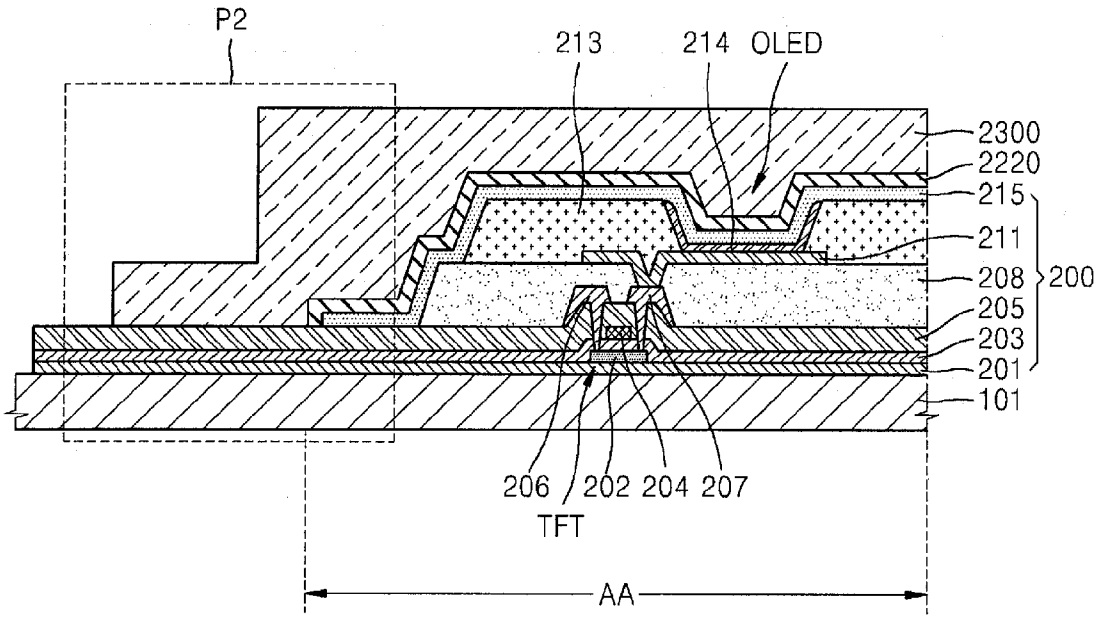
P2
213
214
OLED
2300
2220
215
211
208
200
205
203
201
101
206
202
204
207
TFT
AA

FIG. 7

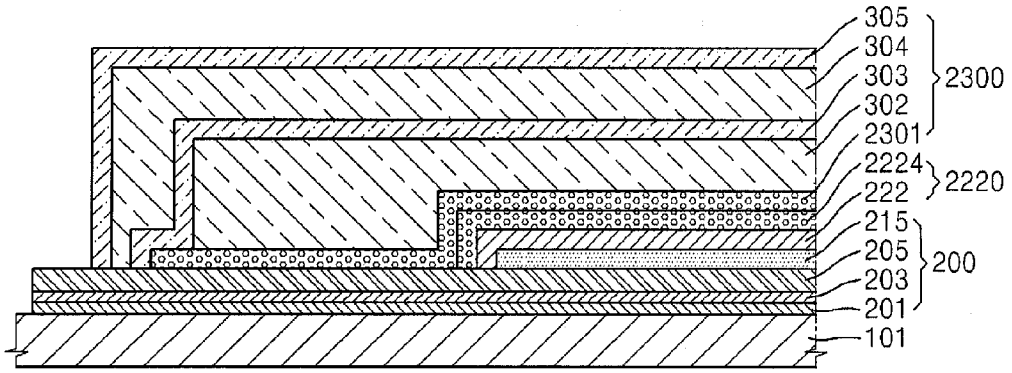
305
304
303
302
2301
2300
2224
222
2220
215
205
203
201
200
101

FIG. 8

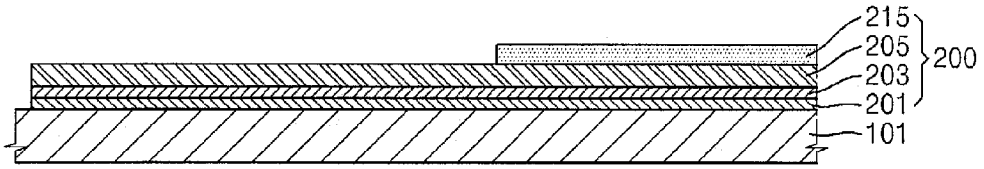
215
205
203
201
200
101

FIG. 9

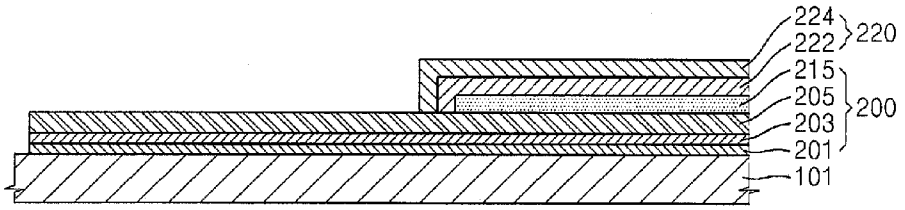
224
222
220
215
205
203
200
201
101

FIG. 10

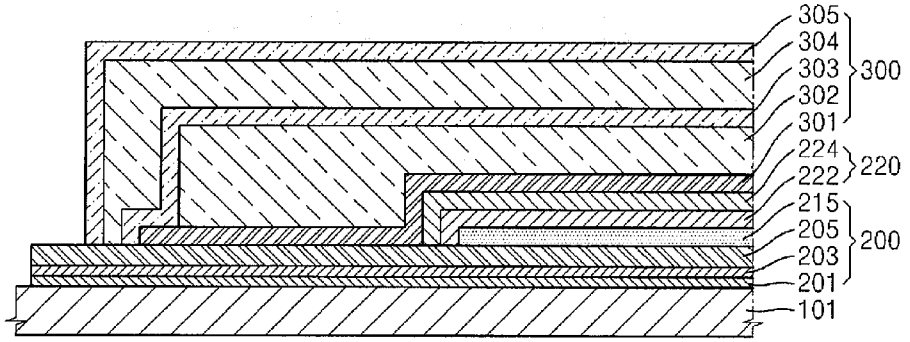
305
304
303
300
302
301
224
222
220
215
205
203
200
201
101

ORGANIC LIGHT-EMTTING DISPLAY APPARATUS AND METHOD OF MANUFACTURING SAME

CROSS-REFERENCE TO RELATED APPLICATION

[0001] This application claims priority to and the benefit of Korean Patent Application No. 10-2013-0086253, filed on Jul. 22, 2013, in the Korean Intellectual Property Office, the disclosure of which is incorporated herein in its entirety by reference.

BACKGROUND

[0002] 1. Field

[0003] One or more embodiments of the present invention relate to an organic light-emitting display apparatus and a method of manufacturing the same.

[0004] 2. Description of the Related Art

[0005] An organic light-emitting display apparatus using an organic light-emitting device is capable of playing a video with a quicker response speed than that of a comparable liquid crystal display (LCD), has a wide angle of view with self-emission and high brightness, and is becoming a next-generation display apparatus.

[0006] The organic light-emitting device usually includes a pixel electrode, an opposite electrode that faces the pixel electrode, and an emission layer between the pixel electrode and the opposite electrode, the emission layer including an organic material. Since the organic light-emitting device is very sensitive to humidity, oxygen, light, and the like, there may occur a pixel shrinkage phenomenon, when an emission region is gradually reduced when the organic light-emitting device is in contact with humidity, oxygen, light, and the like. In addition, the pixel shrinkage phenomenon may occur due to the oxidation of the pixel electrode.

[0007] Furthermore, when oxygen, humidity, and the like are diffused into the emission layer, an electrochemical charge moving reaction occurs at an interface between an electrode and an organic material layer. Such reaction generates an oxide that separates the organic material layer from the pixel electrode or the opposite electrode and causes a phenomenon, such as a dark spot, which reduces the life span of the organic light-emitting device.

SUMMARY

[0008] Aspects of embodiments of the present invention are directed toward an organic light-emitting display apparatus, capable of increasing its life span by improving a pixel shrinkage problem, and a method of manufacturing the same.

[0009] Additional aspects will be set forth in part in the description which follows and, in part, will be apparent from the description, or may be learned by practice of the presented embodiments.

[0010] According to one or more embodiments of the present invention, an organic light-emitting display apparatus includes: a substrate; a display unit having a plurality of organic light-emitting devices on the substrate; an encapsulating layer sealing up the display unit; and a protective layer between the display unit and the encapsulating layer, wherein each of the plurality of organic light-emitting devices includes: a pixel electrode; an intermediate layer on the pixel electrode, the intermediate layer including an organic emission layer; and an opposite electrode on the intermediate layer, and the protective layer includes: a capping layer covering the opposite electrode; and a blocking layer on the capping layer.

[0011] The capping layer may be formed of an organic material.

[0012] The blocking layer may be formed of a lithium fluoride (LiF).

[0013] The blocking layer may cover the capping layer.

[0014] The encapsulating layer may have a structure including at least a first inorganic layer, a first organic layer, and a second inorganic layer that are sequentially stacked.

[0015] The first inorganic layer may be formed of an aluminum oxide (AlO_x).

[0016] The blocking layer may cover the capping layer.

[0017] An area of the first organic layer may be greater than that of the blocking layer.

[0018] An area of the first inorganic layer may be greater than that of the first organic layer.

[0019] The encapsulating layer may further include a second organic layer on the second inorganic layer, and a third inorganic layer on the second organic layer.

[0020] An area of the first inorganic layer may be greater than that of the first organic layer.

[0021] The blocking layer may cover the capping layer, an area of the first organic layer may be greater than that of the blocking layer, and an area of the second organic layer may be greater than that of the first organic layer.

[0022] An area of each of the second inorganic layer and the third inorganic layer may be greater than that of the first inorganic layer.

[0023] According to one or more embodiments of the present invention, an organic light-emitting display apparatus includes: a substrate; a display unit having a plurality of organic light-emitting devices on the substrate; an encapsulating layer sealing up the display unit and including at least a porous inorganic layer, a first organic layer, and a second inorganic layer that are sequentially stacked; and a protective layer between the display unit and the encapsulating layer, wherein each of the plurality of organic light-emitting devices includes: a pixel electrode; an intermediate layer on the pixel electrode, the intermediate layer including an organic emission layer; and an opposite electrode on the intermediate layer, and the protective layer includes: a capping layer covering the opposite electrode; and a porous blocking layer on the capping layer.

[0024] The capping layer may be formed of an organic material.

[0025] The porous blocking layer may be formed of a lithium fluoride (LiF).

[0026] The porous inorganic layer may be formed of an aluminum oxide (AlO_x).

[0027] The porous blocking layer may cover the capping layer.

[0028] An area of the first organic layer may be greater than that of the porous blocking layer.

[0029] An area of the porous inorganic layer may be greater than that of the first organic layer.

[0030] The encapsulating layer may further include a second organic layer on the second inorganic layer, and a third inorganic layer on the second organic layer.

[0031] An area of the porous inorganic layer may be greater than that of the first organic layer.

[0032] The porous blocking layer may cover the capping layer, an area of the first organic layer may be greater than that

of the porous blocking layer, and an area of the second organic layer may be greater than that of the first organic layer.

[0033] An area of each of the second inorganic layer and the third inorganic layer may be greater than that of the porous inorganic layer.

[0034] According to one or more embodiments of the present invention, a method of manufacturing an organic light-emitting display apparatus includes: forming a display unit on a substrate, the display unit defining an active area and including an opposite electrode; forming a capping layer to cover the opposite electrode; forming a blocking layer on the capping layer; and forming an encapsulating layer on the blocking layer to seal up the display unit.

[0035] The capping layer may be formed of an organic material.

[0036] The blocking layer may be formed of a lithium fluoride (LiF).

[0037] The blocking layer may be formed to cover the capping layer.

[0038] The forming of the encapsulating layer may include: forming a first inorganic layer on the blocking layer; forming a first organic layer on the first inorganic layer; and forming a second inorganic layer on the first organic layer.

[0039] The first inorganic layer may be formed of an aluminum oxide (AlO_x) by a sputtering method.

[0040] An area of the first inorganic layer may be greater than that of the first organic layer.

[0041] The blocking layer may be formed to cover the capping layer, and an area of the first organic layer may be greater than that of the blocking layer.

[0042] The method may further include: forming a second organic layer on the second inorganic layer; and forming a third inorganic layer on the second organic layer, wherein the second inorganic layer and the third inorganic layer are formed by a chemical vapor deposition (CVD) method.

[0043] An area of the first inorganic layer may be greater than that of the first organic layer.

[0044] The blocking layer may be formed to cover the capping layer, an area of the first organic layer may be greater than that of the blocking layer, and an area of the second organic layer may be greater than that of the first organic layer.

[0045] An area of each of the second inorganic layer and the third inorganic layer may be greater than that of the first inorganic layer.

[0046] The blocking layer may be formed of LiF having a pin-hole structure.

BRIEF DESCRIPTION OF THE DRAWINGS

[0047] These and/or other aspects will become apparent and more readily appreciated from the following description of the embodiments, taken in conjunction with the accompanying drawings in which:

[0048] FIG. **1** is a schematic top view of an organic light-emitting display apparatus according to an embodiment of the present invention;

[0049] FIG. **2** is a cross-sectional view along line I-I' region of the organic light-emitting display apparatus of FIG. **1**;

[0050] FIG. **3** is a cross-sectional view along line II-II' region of the organic light-emitting display apparatus of FIG. **1**;

[0051] FIG. **4** is a magnified view of a region P1 in FIG. **3**;

[0052] FIG. **5** is a schematic cross-sectional view of an organic light-emitting display apparatus, according to another embodiment of the present invention;

[0053] FIG. **6** is a cross-sectional magnified view of a region of the organic light-emitting display apparatus of FIG. **5**;

[0054] FIG. **7** is a magnified view of a region P2 in FIG. **6**; and

[0055] FIGS. **8** to **10** are schematic cross-sectional views for describing a method of manufacturing the organic light-emitting display apparatus of FIG. **1**, according to an embodiment of the present invention.

DETAILED DESCRIPTION

[0056] Reference will now be made in detail to embodiments, examples of which are illustrated in the accompanying drawings, wherein like reference numerals refer to the like elements throughout. In this regard, the present embodiments may have different forms and should not be construed as being limited to the descriptions set forth herein. Accordingly, the embodiments are merely described below, by referring to the figures, to explain aspects of the present description. In the following description, well-known functions or constructions are not described in detail so as not to obscure the invention with unnecessary detail.

[0057] It will be understood that although the terms "first", "second", etc. may be used herein to describe various components, these components should not be limited by these terms. These components are only used to distinguish one component from another.

[0058] It will be understood that when a layer, region, or component is referred to as being "formed on," another layer, region, or component, it can be directly or indirectly formed on the other layer, region, or component. That is, for example, intervening layers, regions, or components may be present.

[0059] Embodiments of the present invention will now be described more fully with reference to the accompanying drawings. Like reference numerals in the drawings denote like elements, and thus their duplicative descriptions will not be provided again. In the drawings, the thicknesses of some layers and regions are exaggerated for convenience of description. Some layers and regions are also magnified for clarity.

[0060] As used herein, the term "and/or" includes any and all combinations of one or more of the associated listed items. Expressions such as "at least one of," when preceding a list of elements, modify the entire list of elements and do not modify the individual elements of the list.

[0061] Further, the use of "may" when describing embodiments of the present invention refers to "one or more embodiments of the present invention."

[0062] FIG. **1** is a schematic top view of an organic light-emitting display apparatus **10** according to an embodiment of the present invention, FIG. **2** is a cross-sectional view along line I-I of the organic light-emitting display apparatus **10** of FIG. **1**, FIG. **3** is a cross-sectional view along line II-II' of the organic light-emitting display apparatus **10** of FIG. **1**, and FIG. **4** is a magnified view of a region P1 in FIG. **3**.

[0063] Referring to FIGS. **1** to **4**, the organic light-emitting display apparatus **10** according to an embodiment of the present invention may include a substrate **101**, a display unit **200** that defines an active area AA on the substrate **101**, and an encapsulating layer **300** that seals up the display unit **200**.

[0064] The substrate **101** may be a flexible substrate and may be formed of a plastic having good heat resistance and durability, such as polyimide, polyethylene terephthalate (PET), polycarbonate, polyethylene naphthalate, polyarylate (PAR), polyetherimide, or the like. However, one or more embodiments of the present invention are not limited thereto, and the substrate **101** may be formed of various other suitable materials, such as a metal, glass, or the like.

[0065] In some embodiments, the display unit **200** defines the active area AA on the substrate **101** and may include a thin film transistor TFT and an organic light-emitting device OLED electrically connected to the thin film transistor TFT. A pad part 1 may be disposed around the active area AA to deliver an electrical signal from a power supply device or a signal generation device to the active area AA.

[0066] The display unit **200** will now be described in more detail with reference to FIG. **3**.

[0067] A buffer layer **201** may be formed on the substrate **101**. In this case, the buffer layer **201** is formed on the entire surface of the substrate **101**, i.e., both in the active area AA and in an outer area outside of the active area AA. In some embodiments, the buffer layer **201** is formed to provide a planarized plane on the substrate **101**, and functions to effectively prevent the infiltration of impurity elements through the substrate **101**. The buffer layer **201** may be formed of various materials suitable for use in organic light-emitting devices.

[0068] For example, the buffer layer **201** may include an inorganic material, such as a silicon oxide, a silicon nitride, a silicon oxynitride, an aluminum oxide, an aluminum nitride, a titanium oxide, a titanium nitride, or the like, or an organic material, such as polyimide, polyesther, acryl, or the like, and may be formed by stacking a plurality of materials from among the materials described above.

[0069] The thin film transistor TFT may be formed on the buffer layer **201**. The thin film transistor TFT may include an active layer **202**, a gate electrode **204**, a source electrode **206**, and a drain electrode **207**.

[0070] The active layer **202** may be formed of an inorganic semiconductor, such as an amorphous silicon or a polysilicon, an organic semiconductor, or an oxide semiconductor, and may include a source region, a drain region, and a channel region.

[0071] A gate insulating layer **203** may be formed on the active layer **202**. In some embodiments, the gate insulating layer **203** is formed to correspond to the entire surface of the substrate **101**. That is, in some embodiments, the gate insulating layer **203** is formed to correspond both to the active area AA and the outer area outside of the active area AA. The gate insulating layer **203** may provide insulation between the active layer **202** and the gate electrode **204** and may be formed of an organic material or an inorganic material, such as a silicon nitride (SiN_x) or a silicon oxide (SiO_2).

[0072] The gate electrode **204** may be formed on the gate insulating layer **203**. The gate electrode **204** may include gold (Au), silver, (Ag), copper (Cu), nickel (Ni), platinum (Pt), palladium (Pd), aluminum (Al), molybdenum (Mo), or an alloy, such as an Al:neodymium (Nd) alloy, a Mo:tungsten (W) alloy, or the like. However, the gate electrode **204** is not limited thereto and may be formed of various suitable materials by considering design conditions.

[0073] An interlayer insulating layer **205** may be formed on the gate electrode **204**. In an embodiment of the present invention, the interlayer insulating layer **205** is formed to correspond to the entire surface of the substrate **101**. That is, in some embodiments, the interlayer insulating layer **205** is formed to correspond both to the active area AA and the outer area outside of the active area AA.

[0074] In some embodiments, the interlayer insulating layer **205** is disposed between the gate electrode **204** and the source electrode **206** and, in some embodiments between the gate electrode **204** and the drain electrode **207**, for insulation therebetween, and may be formed of an inorganic material, such as SiN_x, SiO_2, or the like. In the current embodiment, the interlayer insulating layer **205** may be formed of SiN_x or may be a two-layer structure formed of a SiN_x layer and a SiO_2 layer.

[0075] The source electrode **206** and the drain electrode **207** may be formed on the interlayer insulating layer **205**. In some embodiments, the interlayer insulating layer **205** and the gate insulating layer **203** are formed to expose the source region and the drain region of the active layer **202**, and the source electrode **206** and the drain electrode **207** are formed to contact the exposed source and drain regions of the active layer **202**.

[0076] Although FIG. **3** illustrates a top-gate type thin film transistor TFT that sequentially includes the active layer **202**, the gate electrode **204** and the source and drain electrodes **206** and **207**, one or more of the above embodiments of the present invention are not limited thereto, and the gate electrode **204** may be disposed below the active layer **202**.

[0077] The thin film transistor TFT is electrically connected to the organic light-emitting device OLED to drive the organic light-emitting device OLED, and is protected by a passivation layer **208** that covers the thin film transistor TFT.

[0078] The passivation layer **208** may include an inorganic insulating layer and/or an organic insulating layer. Non-limiting examples of the inorganic insulating layer include a silicon oxide (SiO_2), a silicon nitride (SiN_x), a silicon oxynitride (SiON), an aluminum oxide (Al_2O_3), a titanium oxide (TiO_2), a tantalum oxide (Ta_2O_5), a hafnium oxide (HfO_2), a zirconium oxide (ZrO_2), a barium stannate titanate (BST), a lead zirconate titanate (PZT), or the like, and non-limiting examples of the organic insulating layer include a typical general-use polymer (polymethylmethacrylate (PMMA) or polystyrene (PS)), a polymer derivative having a phenol group, an acryl group polymer, an imide group polymer, an aryl ether group polymer, an amide group polymer, a fluorine group polymer, a p-xylene group polymer, a vinyl alcohol group polymer, a blend thereof, or the like. The passivation layer **208** may be formed by stacking an inorganic insulating layer and an organic insulating layer.

[0079] The organic light-emitting device OLED may be formed on the passivation layer **208** and may include a pixel electrode **211**, an intermediate layer **214**, and an opposite electrode **215**.

[0080] The pixel electrode **211** may be formed on the passivation layer **208**. For example, the passivation layer **208** may be formed to expose a set or predetermined region of the drain electrode **207** without covering the entire drain electrode **207**, and the pixel electrode **211** may be formed to be connected to the exposed region of the drain electrode **207**.

[0081] In one embodiment, the pixel electrode **211** may be a reflective electrode and may include a reflective layer formed of Ag, Mg, Al, Pt, Pd, Au, Ni, Nd, iridium (Ir), chromium (Cr), a compound thereof, or the like, and a transparent or translucent electrode layer formed on the reflective layer. The transparent or translucent electrode layer may include at

least one selected from the group consisting of an indium tin oxide (ITO), an indium zinc oxide (IZO), a zinc oxide (ZnO), an indium oxide (In_2O_3), an indium gallium oxide (IGO), and an aluminum zinc oxide (AZO).

[0082] The opposite electrode **215** positioned to face the pixel electrode **211** may be a transparent or translucent electrode and may be formed of a metal thin film having a small work function, including lithium (Li), calcium (Ca), lithium fluoride (LiF)/Ca, LiF/Al, Al, Ag, magnesium (Mg), or a compound thereof. The opposite electrode **215** may be formed with the thickness of about 5 nm to about 20 nm. In addition, an auxiliary electrode layer or a bus electrode may be further included and formed of a material for forming a transparent electrode, such as an ITO, an IZO, a ZnO, an In_2O_3, or the like.

[0083] In some embodiments, the opposite electrode **215** may allow the light emitted by an organic emission layer of the intermediate layer **214** to pass through. The light emitted by the organic emission layer may be directly emitted towards the opposite electrode **215** or may be reflected by the pixel electrode **211**, which includes a reflective electrode, and then emitted towards the opposite electrode **215**.

[0084] However, the flexible display apparatus **10** according to the current embodiment is not limited to a top emission type, and the light emitted by the organic emission layer may be emitted towards the substrate **101** as a bottom emission type. In this case, the pixel electrode **211** may include a transparent or translucent electrode, and the opposite electrode **215** may include a reflective electrode. The flexible display apparatus **10** may be a double-side emission type apparatus that emits light in both directions, i.e., to the top and the bottom.

[0085] A pixel defining layer **213** may be formed on the pixel electrode **211**, and may be formed of any suitable insulating material. In some embodiments, the pixel defining layer **213** exposes a set or predetermined region of the pixel electrode **211**, and the intermediate layer **214** including the organic emission layer is located in the exposed region.

[0086] The organic emission layer may be formed of a low-molecular organic material or a high-molecular organic material. Besides the organic emission layer, the intermediate layer **214** may further selectively include function layers, such as a hole transport layer (HTL), a hole injection layer (HIL), an electron transport layer (ETL), an electron injection layer (EIL), or the like.

[0087] The encapsulating layer **300** may be formed on the opposite electrode **215**. The encapsulating layer **300** may include at least a first inorganic layer **301**, a first organic layer **302**, and a second inorganic layer **303**. A protective layer **220** may be further formed between the encapsulating layer **300** and the display unit **200**.

[0088] The protective layer **220** will now be described in more detail with reference to FIG. **4**.

[0089] The protective layer **220** may include a capping layer **222** that covers the opposite electrode **215** and a blocking layer **224** formed on the capping layer **222**.

[0090] The capping layer **222** may be formed to cover the opposite electrode **215**. The capping layer **222** may be formed of an organic material, such as a-neodymium pyrocatechin disulfonate (a-NPD), N,N'-diphenyl-N,N'-bis(1-naphthyl)(1,1'-biphenyl)-4,4'diamine (NPB), N,N-diphenyl-N,N-bis(3-methylphenyl)(1,1-biphenyl)-4,4 diamine (TPD), 4,4',4"-tris(phenyl-m-tolylamino)triphenylamine (m-MTDATA), tris-(8-hydroxyquinolate) aluminum (Alq_3), copper phthalocyanine (CuPc), or the like, and may function to not only protect the organic light-emitting device OLED, but also aid in efficient emission of light generated by the organic light-emitting device OLED. The capping layer **222** may be formed with the thickness of about 20 nm to about 200 nm. A distance from the edge of the opposite electrode **215** to the edge of the capping layer **222** may be from about 50 μm to about 150 μm.

[0091] The blocking layer **224** may be formed of an inorganic material, such as LiF, MgF_2, CaF_2, or the like. The blocking layer **224** functions to effectively prevent plasma and the like, used in a process of forming the first inorganic layer **301**, from infiltrating into the organic light-emitting device OLED so as not to damage the intermediate layer **214**, the opposite electrode **215**, and the like. The blocking layer **224** may be formed with the thickness of about 30 nm to about 200 nm. A distance from the edge of the capping layer **222** to the edge of the blocking layer **224** may be from about 50 μm to about 150 μm.

[0092] The blocking layer **224** may have a large dipole moment. In the embodiments, when the blocking layer **224** contacts the opposite electrode **215**, the large dipole moment of the blocking layer **224** affects the opposite electrode **215**, and as a result, an oxidation reaction may occur on the surface of the opposite electrode **215**. The oxidation of the opposite electrode **215** may lead to a pixel shrinkage phenomenon of the organic light-emitting device OLED. For example, when the opposite electrode **215** is formed of Mg, and the blocking layer **224** is formed of LiF, an oxidation reaction according to a chemical formula 1 may occur.

$$2LiF+Mg \rightarrow MgF_2+2Li \quad \text{(Chemical formula 1)}$$

[0093] The oxidation of the opposite electrode **215**, according to the chemical formula 1, may lead to a pixel shrinkage phenomenon of the organic light-emitting device OLED. According to an embodiment of the present invention, the capping layer **222** is formed to fully cover the opposite electrode **215**, thereby effectively preventing the contact of the blocking layer **224** with the opposite electrode **215**. Thus, the surface reaction between the blocking layer **224** and the opposite electrode **215**, and subsequent oxidation of the opposite electrode **215**, may be effectively prevented. Accordingly, a pixel shrinkage phenomenon, which occurs due to the oxidation of the opposite electrode **215**, may be effectively prevented.

[0094] In some embodiments, the first inorganic layer **301** is formed on the protective layer **220**. The first inorganic layer **301** may be formed of, for example, an aluminum oxide (AlO_x).

[0095] The first organic layer **302** may be formed on the first inorganic layer **301** and may be formed of a high-molecular organic compound. The first organic layer **302** may be formed with a set or predetermined thickness to planarize (even out) a level difference due to the pixel defining layer **213**. The first organic layer **302** may include any one of epoxy, acrylate, and urethane acrylate. An area of the first organic layer **302** may be less than that of the first inorganic layer **301**. The area of the first organic layer **302** may be greater than that of the blocking layer **224**. Accordingly, the expansion of the area of the first organic layer **302** may effectively prevent the infiltration of humidity from the outside of a panel into the organic light-emitting device.

[0096] In some embodiments, the second inorganic layer **303** is formed to surround the first inorganic layer **301** and the

first organic layer **302**. Thus, since the entire first organic layer **302** is surrounded by the first inorganic layer **301** and the second inorganic layer **303**, the infiltration of external humidity and oxygen into the organic light-emitting device may be effectively prevented.

[0097] The second inorganic layer **303** may be formed of, for example, SiN_x or SiO_x, and may be formed with a set or predetermined thickness by chemical vapor deposition (CVD). Thus, even though particles exist on the first organic layer **302**, a level difference formed due to the particles may be sufficiently covered. In addition, since the second inorganic layer **303** is formed by CVD in which plasma is not used, the first organic layer **302** may be protected from being damaged when the second inorganic layer **303** is formed, and a discharge of gas from the first organic layer **302** may be effectively prevented.

[0098] The second inorganic layer **303** may be formed to be larger than the first inorganic layer **301** and may directly contact the interlayer insulating layer **205** outside the active area AA. In addition, the second inorganic layer **303** may be formed of the same material as the interlayer insulating layer **205**. Accordingly, a bonding force between the second inorganic layer **303** and the interlayer insulating layer **205** may increase.

[0099] A second organic layer **304** and a third inorganic layer **305** may be formed on the second inorganic layer **303**, and although not shown, a fourth inorganic layer of AlO_x may be further formed on the outer surface of the encapsulating layer **300**.

[0100] The second organic layer **304** may include any one of epoxy, acrylate, and urethane acrylate and may be formed with a set or predetermined thickness. In some embodiments, the second organic layer **304** alleviates a film stress exerted onto the first inorganic layer **301**, and even though particles or the like exist, the second organic layer **304** covers the particles or the like for planarization. An area of the second organic layer **304** may be greater than that of the first organic layer **302**. Accordingly, the expansion of the area of the second organic layer **304** may effectively prevent the infiltration of humidity into the organic light-emitting device from the outside of the panel.

[0101] In some embodiments, the third inorganic layer **305** covers the second organic layer **304**. The third inorganic layer **305** may be formed of the same material as the second inorganic layer **303**. The third inorganic layer **305** may be formed to be larger than the second inorganic layer **303** and may directly contact the interlayer insulating layer **205** outside the active area AA. In addition, the third inorganic layer **305** may be formed of the same material as the interlayer insulating layer **205**. Accordingly, a bonding force between the third inorganic layer **305** and the interlayer insulating layer **205** may increase.

[0102] The encapsulating layer **300** may further include a plurality of additional inorganic layers and a plurality of additional organic layers that are alternately stacked, and the number of stacks of the inorganic layers and the organic layers is not limited to the embodiments of the present invention.

[0103] In one embodiment, a protective film is attached to the upper surface of the encapsulating layer **300**. However, when an attachment force of the protective film is strong, the encapsulating layer **300** may be peeled off when the protective film is removed. Thus, a fourth inorganic layer of AlO_x having a weak attachment force to the protective film may be further formed to remedy this problem.

[0104] FIG. **5** is a schematic cross-sectional view of an organic light-emitting display apparatus **20** according to another embodiment of the present invention, FIG. **6** is a cross-sectional view of a portion of the organic light-emitting display apparatus **20** of FIG. **5**, and FIG. **7** is a magnified view of a portion P2 in FIG. **6**.

[0105] Referring to FIGS. **5** to **7**, the organic light-emitting display apparatus **20** according to embodiments of the present invention may include the substrate **101**, the display unit **200** that defines the active area AA on the substrate **101**, and an encapsulating layer **2300** that seals up the display unit **200**.

[0106] The substrate **101** may be a flexible substrate. However, one or more embodiments of the present invention are not limited thereto, and the substrate **101** may be formed of various suitable materials, such as a metal, glass, or the like.

[0107] The display unit **200** defines the active area AA on the substrate **101** and may include the thin film transistor TFT and the organic light-emitting device OLED electrically connected to the thin film transistor TFT. The pad part 1 may be disposed around the active area AA to deliver an electrical signal from a power supply device or a signal generation device to the active area AA.

[0108] The display unit **200** will now be described in more detail with reference to FIG. **6**.

[0109] The buffer layer **201** may be formed on the substrate **101**.

[0110] The thin film transistor TFT may be formed on the buffer layer **201**. The thin film transistor TFT may include the active layer **202**, the gate electrode **204**, the source electrode **206**, and the drain electrode **207**.

[0111] The gate insulating layer **203** may be formed on the active layer **202**. In some embodiments, the gate insulating layer **203** is formed to correspond to the entire surface of the substrate **101**.

[0112] The gate electrode **204** may be formed on the gate insulating layer **203**.

[0113] The interlayer insulating layer **205** may be formed on the gate electrode **204**. In some embodiments, the interlayer insulating layer **205** is formed to correspond to the entire surface of the substrate **101**. That is, the interlayer insulating layer **205** is formed to correspond to the active area AA and the outer area outside of the active area AA.

[0114] The interlayer insulating layer **205** may be formed of an inorganic material, such as SiN_x, SiO_2, or the like. In the current embodiment, the interlayer insulating layer **205** may be formed of SiN_x or may be a two-layer structure including an SiN_x layer and an SiO_2 layer.

[0115] The source electrode **206** and the drain electrode **207** may be formed on the interlayer insulating layer **205**.

[0116] Although FIG. **6** illustrates the thin film transistor TFT of a top-gate type that sequentially includes the active layer **202**, the gate electrode **204** and the source and drain electrodes **206** and **207**, one or more of the above embodiments of the present invention are not limited thereto, and the gate electrode **204** may be disposed below the active layer **202**.

[0117] The thin film transistor TFT is electrically connected to the organic light-emitting device OLED to drive the organic light-emitting device OLED and is protected by the passivation layer **208** that covers the thin film transistor TFT.

[0118] The passivation layer **208** may include an inorganic insulating layer and/or an organic insulating layer. The pas-

sivation layer **208** may be formed as a complex stacked body of an inorganic insulating layer and an organic insulating layer.

[0119] The organic light-emitting device OLED may be formed on the passivation layer **208** and may include the pixel electrode **211**, the intermediate layer **214**, and the opposite electrode **215**.

[0120] The pixel electrode **211** may be formed on the passivation layer **208** to face the pixel electrode **211**. The opposite electrode **215** may be a transparent or translucent electrode and may be formed of a metal thin film having a small work function, including Li, Ca, LiF/Ca, LiF/Al, Al, Ag, Mg or a compound thereof. The opposite electrode **215** may be formed with the thickness of about 5 nm to about 20 nm.

[0121] Thus, the opposite electrode **215** may allow the light emitted by the organic emission layer included in the intermediate layer **214** to pass through. That is, the light emitted by the organic emission layer may be directly emitted towards the opposite electrode **215** or be reflected by the pixel electrode **211** including a reflective electrode and then emitted towards the opposite electrode **215**.

[0122] However, the flexible display apparatus **20** according to the current embodiment is not limited to a top emission type, and the light emitted by the organic emission layer may be emitted towards the substrate **101** as a bottom emission type. In this case, the pixel electrode **211** may include a transparent or translucent electrode, and the opposite electrode **215** may include a reflective electrode. The flexible display apparatus **20** may be a double-side emission type to emit light in both directions, i.e., to the top and the bottom.

[0123] The pixel defining layer **213** may be formed on the pixel electrode **211**.

[0124] The organic emission layer included in the intermediate layer **214** may be formed of a low-molecular organic material or a high-molecular organic material. Besides the organic emission layer, the intermediate layer **214** may further selectively include function layers, such as an HTL, an HIL, an ETL, an EIL, or the like.

[0125] The encapsulating layer **2300** is disposed opposite to the electrode **215**. The encapsulating layer **2300** may include at least a porous inorganic layer **2301**, the first organic layer **302**, and the second inorganic layer **303**. A protective layer **2220** may be further formed between the encapsulating layer **2300** and the display unit **200**.

[0126] The protective layer **2220** will now be described in more detail with reference to FIG. **7**.

[0127] The protective layer **2220** may include the capping layer **222** that covers the opposite electrode **215**, and a porous blocking layer **2224** formed on the capping layer **222**.

[0128] The capping layer **222** may be formed to cover the opposite electrode **215**. The capping layer **222** may be formed of an organic material, such as a-NPD, NPB, TPD, m-MTDATA, Alq_3, CuPc, or the like and may function to not only protect the organic light-emitting device OLED, but also aid in efficient emission of light generated by the organic light-emitting device OLED. The capping layer **222** may be formed with the thickness of about 20 nm to about 200 nm. A distance from the edge of the opposite electrode **215** to the edge of the capping layer **222** may be from about 50 μm to about 150 μm.

[0129] The porous blocking layer **2224** may be formed of an inorganic material, such as LiF, MgF_2, CaF_2, or the like. In some embodiments, the porous blocking layer **2224** functions to block plasma and the like used in a process of forming the first inorganic layer **301** from infiltrating into the organic light-emitting device OLED so as not to damage the intermediate layer **214**, the opposite electrode **215**, and the like. The porous blocking layer **2224** may be formed with the thickness of about 30 nm to about 200 nm. A distance from the edge of the capping layer **222** to the edge of the porous blocking layer **2224** may be from about 50 μm to about 150 μm. In the current embodiment, the porous blocking layer **2224** may be formed of LiF having a pin-hole structure.

[0130] The porous blocking layer **2224** may have a large dipole moment. In embodiments when the porous blocking layer **2224** contacts the opposite electrode **215**, the large dipole moment of the porous blocking layer **2224** affects the opposite electrode **215**, and as a result, an oxidation reaction may occur on the surface of the opposite electrode **215**. The oxidation of the opposite electrode **215** may lead to a pixel shrinkage phenomenon of the organic light-emitting device OLED. For example, when the opposite electrode **215** is formed of Mg, and the porous blocking layer **2224** is formed of LiF, an oxidation reaction according to the chemical formula 1 may occur.

$$2LiF+Mg \rightarrow MgF_2+2Li \qquad \text{(Chemical formula 1)}$$

[0131] Here, the oxidation reaction of the opposite electrode **215**, according to the chemical formula 1, may lead to a pixel shrinkage phenomenon of the organic light-emitting device OLED. According to an embodiment of the present invention, the capping layer **222** is formed to fully cover the opposite electrode **215**, thereby effectively preventing the contact of the porous blocking layer **2224** with the opposite electrode **215**. Thus, the surface reaction between the porous blocking layer **2224** and the opposite electrode **215**, and subsequent oxidation of the opposite electrode **215**, may be effectively prevented. Accordingly, a pixel shrinkage phenomenon, which occurs due to the oxidation of the opposite electrode **215**, may be effectively prevented.

[0132] In some embodiments, the porous inorganic layer **2301** is formed on the protective layer **2220**. The porous inorganic layer **2301** may be formed of, for example, AlO_x. The porous inorganic layer **2301** may be formed with a set or predetermined thickness by a sputtering method. In some embodiments the porous inorganic layer **2301** may be formed on the porous blocking layer **2224**. When the porous inorganic layer **2301** is formed on the porous blocking layer **2224**, the porous inorganic layer **2301** is grown according to a crystalline structure of the porous blocking layer **2224**. That is, fine cracks may exist on the porous inorganic layer **2301** formed on the porous LiF of the porous blocking layer **2224** having a pin-hole structure.

[0133] The first organic layer **302** may be formed on the porous inorganic layer **2301**. The first organic layer **302** may be formed of a high-molecular organic compound. In some embodiments the high-molecular organic compound may outgas, and the discharged gas may infiltrate towards the organic light-emitting device OLED. If an inorganic layer is broken and cracked due to a particle or the like, the gas discharged from the high-molecular organic compound may converge into the crack on the inorganic layer, and accordingly, a corresponding point of the opposite electrode **215** of the organic light-emitting device OLED may be oxidized, thereby causing a dark spot.

[0134] However, according to the current embodiment, since the porous inorganic layer **2301** and the porous blocking layer **2224** have fine cracks, a gas discharged from the first organic layer **302** does not converge into any one point. Since

the gas discharged from the first organic layer **302** can be widely spread due to the fine cracks existing on the porous inorganic layer **2301** and the porous blocking layer **2224**, the opposite electrode **215** may be protected from oxidation at only any one point, and accordingly, the formation of the dark spot may be effectively prevented. That is, since it may be effectively prevented due to an average effect that substances damaging the opposite electrode **215** and the intermediate layer **214**, such as a gas discharged from the first organic layer **302** and the like, converge into a certain portion, a partial damage of the opposite electrode **215** and the intermediate layer **214** may be restrained, thereby delaying a dark spot. In the present application, "the average effect" refers to the fact that an outgas substance does not converge into one portion but is substantially spread out. In contrast, when an elaborate film, through which an outgas substance is difficult to be spread, is used instead of a porous film, the outgas substance may concentrate through a defect portion of the elaborate film, i.e., a pin-hole due to a foreign substance or a scratch, and thus may converge into the defect portion. As a result, the intermediate layer **214** between the opposite electrode **215** and the pixel electrode **211** may be damaged and a dark spot may occur. In some cases, a continuously growing dark spot, so-called progressive dark spot, may occur. In embodiments of the present invention, however, by using the porous blocking layer **2224** and the porous inorganic layer **2301**, an outgas substance does not partially converge into a defect portion but is generally and uniformly spread due to the average effect, and a progressive dark spot does not occur. Accordingly, the life span of the organic light-emitting display apparatus **20** may extend, thereby improving the reliability of a product.

[0135] In some embodiments, the first organic layer **302** is formed on the porous inorganic layer **2301**. The first organic layer **302** may be formed with a set or predetermined thickness to planarize a level difference due to the pixel defining layer **213**. The first organic layer **302** may include any one of epoxy, acrylate, and urethane acrylate. The area of the first organic layer **302** may be less than that of the porous inorganic layer **2301**. The area of the first organic layer **302** may be greater than that of the porous blocking layer **2224**. Accordingly, the expansion of the area of the first organic layer **302** may effectively prevent the infiltration of humidity into the organic light-emitting device from the outside of a panel.

[0136] In some embodiments, the second inorganic layer **303** is formed to surround the porous inorganic layer **2301** and the first organic layer **302**. That is, since the entire first organic layer **302** is surrounded by the porous inorganic layer **2301** and the second inorganic layer **303**, the infiltration of external humidity and oxygen into the organic light-emitting device may be effectively prevented.

[0137] The second inorganic layer **303** may be formed of, for example, SiN_x or SiO_x, and may be formed with a set or predetermined thickness by CVD. Thus, even though particles exist on the first organic layer **302**, a level difference formed due to the particles may be sufficiently covered. In addition, since the second inorganic layer **303** is formed by CVD in which plasma is not used, the first organic layer **302** may be protected from being damaged when the second inorganic layer **303** is formed, and a discharge of gas from the first organic layer **302** may be effectively prevented.

[0138] The second inorganic layer **303** may be formed to be larger than the porous inorganic layer **2301** and may directly contact the interlayer insulating layer **205** outside the active area AA. In addition, the second inorganic layer **303** may be formed of the same material as the interlayer insulating layer **205**. Accordingly, a bonding force between the second inorganic layer **303** and the interlayer insulating layer **205** may increase.

[0139] The second organic layer **304** and the third inorganic layer **305** may be formed on the second inorganic layer **303**, and although not shown, a fourth inorganic layer of AlO_x, may be further formed on the outer surface of the encapsulating layer **300**.

[0140] The second organic layer **304** may include any one of epoxy, acrylate, and urethane acrylate and may be formed with a set or predetermined thickness. In some embodiments, the second organic layer **304** alleviates a film stress exerted onto the porous inorganic layer **2301**, and even though particles or the like exist, the second organic layer **304** covers the particles or the like for planarization. An area of the second organic layer **304** may be greater than that of the first organic layer **302**. Accordingly, the expansion of the area of the second organic layer **304** may effectively prevent the infiltration of humidity into the organic light-emitting device from the outside of the panel.

[0141] In some embodiments, the third inorganic layer **305** covers the second organic layer **304**. The third inorganic layer **305** may be formed of the same material as the second inorganic layer **303**. The third inorganic layer **305** may be formed to be larger than the second inorganic layer **303** and may directly contact the interlayer insulating layer **205** outside the active area AA. In addition, the third inorganic layer **305** may be formed of the same material as the interlayer insulating layer **205**. Accordingly, a bonding force between the third inorganic layer **305** and the interlayer insulating layer **205** may increase.

[0142] The encapsulating layer **300** may further include a plurality of additional inorganic layers and a plurality of additional organic layers that are alternately stacked, and the number of stacks of the inorganic layers and the organic layers is not limited to the embodiments of the present invention.

[0143] In some embodiments, a protective film is attached to the upper surface of the encapsulating layer **300**. However, if an attachment force of the protective film is strong, the encapsulating layer **300** may be peeled off when the protective film is removed. Thus, a fourth inorganic layer formed of AlOx having a weak attachment force to the protective film may be further formed to remedy this problem.

[0144] FIGS. **8** to **10** are schematic cross-sectional views for describing a method of manufacturing the organic light-emitting display apparatus **10** of FIG. **1**, according to an embodiment of the present invention. Since the display unit **200** is substantially the same as described with reference to FIG. **3**, the detailed description of the configuration of the display unit **200** is not provided again in FIGS. **8** to **10**.

[0145] The method of manufacturing the organic light-emitting display apparatus **10** will now be described with reference to FIGS. **8** to **10** and FIG. **4** together.

[0146] As shown in FIG. **8**, the display unit **200** that defines the active area AA is formed on the substrate **101**. Since the display unit **200** may have the configuration illustrated in FIG. **3**, and various suitable organic light-emitting displays may be applied thereto, a detailed method of manufacturing the display unit **200** is not provided here. In some embodiments, the display unit **200** includes the buffer layer **201** formed up to the outer area of the active area AA, the gate

insulating layer **203**, and the interlayer insulating layer **205**. In some embodiments, the interlayer insulating layer **205** is disposed between the gate electrode (**204** of FIG. **3**) and the source electrode (**206** of FIG. **3**), and in some embodiments between the gate electrode (**204** of FIG. **3**) and the drain electrode (**207** of FIG. **3**), for insulation therebetween, and may be formed of an inorganic material, such as SiN_x, SiO_2, or the like.

[0147] As shown in FIG. **9**, the protective layer **220** may be formed on the display unit **200**.

[0148] In some embodiments, the protective layer **220** includes the capping layer **222** which may be formed of an organic material, such as a-NPD, NPB, TPD, m-MTDATA, Alq_3, CuPc, or the like, and the blocking layer **224** which may be formed of LiF.

[0149] In some embodiments, the capping layer **222** is formed to cover the opposite electrode **215**. In some embodiments, the capping layer **222** is formed to fully cover the opposite electrode **215**, thereby effectively preventing the blocking layer **224** from contacting the opposite electrode **215**. Thus, the surface reaction between the blocking layer **224** and the opposite electrode **215**, and subsequent oxidation of the opposite electrode **215**, may be effectively prevented. Accordingly, a pixel shrinkage phenomenon, which occurs due to the oxidation of the opposite electrode **215**, may be effectively prevented.

[0150] As shown in FIG. **10**, the first inorganic layer **301**, the first organic layer **302**, the second inorganic layer **303**, the second organic layer **304**, and the third inorganic layer **305** may be sequentially formed.

[0151] The first inorganic layer **301** may be formed of AlO_x, and may be formed with a set or predetermined thickness by a sputtering method.

[0152] According to another embodiment of the present invention, fine cracks on the first inorganic layer **301** are created by making LiF generally have a pin-hole structure and growing the first inorganic layer **301** deposited on the blocking layer **224** according to a crystalline structure of the blocking layer **224**. Accordingly, even though a gas is discharged from the first organic layer **302** and the like formed on the first inorganic layer **301**, the discharged gas may be widely spread the fine cracks existing on the first inorganic layer **301** and the blocking layer **224** may effectively prevent the discharged gas from converging into any one point (average effect). Thus, the oxidation of the opposite electrode **215** and the occurrence of a dark spot thereby may be effectively prevented.

[0153] The first organic layer **302** may be formed with a set or predetermined thickness to planarize a level difference due to the pixel defining layer (**213** of FIG. **3**). The first organic layer **302** may include any one of epoxy, acrylate, and urethane acrylate. The area of the first organic layer **302** may be greater than that of the blocking layer **224** and less than that of the first inorganic layer **301**. Accordingly, the expansion of the area of the first organic layer **302** may effectively prevent the infiltration of humidity into the organic light-emitting device from the outside of a panel.

[0154] The second inorganic layer **303** is formed to surround the first inorganic layer **301** and the first organic layer **302**. That is, since the entire first organic layer **302** is surrounded by the first inorganic layer **301** and the second inorganic layer **303**, the infiltration of external humidity and oxygen may be effectively prevented.

[0155] The second inorganic layer **303** may be formed of, for example, SiN_x with a set or predetermined thickness by CVD. Thus, even though particles exist on the first organic layer **302**, a level difference formed due to the particles may be sufficiently covered. In addition, since the second inorganic layer **303** is formed by CVD in which plasma is not used, the first organic layer **302** may be protected from being damaged when the second inorganic layer **303** is formed, thereby effectively preventing a discharge of gas from the first organic layer **302**.

[0156] In some embodiments, the second inorganic layer **303** is formed to be larger than the first inorganic layer **301** and to directly contact the interlayer insulating layer **205** outside the active area AA. In addition, the second inorganic layer **303** may be formed of the same material as the interlayer insulating layer **205**. In this case, a bonding force between the second inorganic layer **303** and the interlayer insulating layer **205** may increase. Thus, since the second inorganic layer **303** is formed with enough thickness to cover particles, even when a film stress increases, the second inorganic layer **303** may be protected from peeling off, and accordingly, the infiltration of external humidity and oxygen into the organic light-emitting device may be effectively prevented.

[0157] The second organic layer **304** may include any one of epoxy, acrylate, and urethane acrylate and may be formed with a set or predetermined thickness. In some embodiments, the second organic layer **304** alleviates a film stress exerted onto the first inorganic layer **301**, and even though particles or the like exist, the second organic layer **304** covers the particles or the like for planarization.

[0158] In some embodiments, the third inorganic layer **305** covers the second organic layer **304**. The third inorganic layer **305** may be formed by CVD, thereby effectively preventing the damage to the second organic layer **304**.

[0159] The encapsulating layer **300** may further include a plurality of additional inorganic layers and a plurality of additional organic layers that are alternately stacked, and the number of stacks of the inorganic layers and the organic layers is not limited to the embodiments of the present invention.

[0160] As described above, according to the one or more of the above embodiments of the present invention, the oxidation of an opposite electrode may be effectively prevented, thereby improving a pixel shrinkage problem.

[0161] In addition, the appearance of a progressive dark spot may be delayed, thereby improving the life span of an organic light-emitting display apparatus.

[0162] It should be understood that the exemplary embodiments described therein should be considered in a descriptive sense only and not for purposes of limitation. Descriptions of features or aspects within each embodiment should typically be considered as available for other similar features or aspects in other embodiments.

[0163] While one or more embodiments of the present invention have been described with reference to the figures, it will be understood by those of ordinary skill in the art that various changes in form and details may be made therein without departing from the spirit and scope of the present invention as defined by the following claims and equivalents thereof.

What is claimed is:

1. An organic light-emitting display apparatus comprising:

a substrate;

a display unit having a plurality of organic light-emitting devices on the substrate;

an encapsulating layer sealing up the display unit; and

a protective layer between the display unit and the encapsulating layer,

wherein each of the plurality of organic light-emitting devices comprises:

a pixel electrode,

an intermediate layer on the pixel electrode, the intermediate layer comprising an organic emission layer, and

an opposite electrode on the intermediate layer; and

the protective layer comprises:

a capping layer covering the opposite electrode, and

a blocking layer on the capping layer.

2. The organic light-emitting display apparatus of claim **1**, wherein the capping layer is formed of an organic material.

3. The organic light-emitting display apparatus of claim **1**, wherein the blocking layer is formed of a lithium fluoride (LiF).

4. The organic light-emitting display apparatus of claim **1**, wherein the blocking layer covers the capping layer.

5. The organic light-emitting display apparatus of claim **1**, wherein the encapsulating layer has a structure comprising a first inorganic layer, a first organic layer, and a second inorganic layer that are sequentially stacked.

6. The organic light-emitting display apparatus of claim **5**, wherein the first inorganic layer is formed of an aluminum oxide (AlO_x).

7. The organic light-emitting display apparatus of claim **5**, wherein the blocking layer covers the capping layer.

8. The organic light-emitting display apparatus of claim **7**, wherein an area of the first organic layer is greater than that of the blocking layer.

9. The organic light-emitting display apparatus of claim **5**, wherein an area of the first inorganic layer is greater than that of the first organic layer.

10. The organic light-emitting display apparatus of claim **5**, wherein the encapsulating layer further comprises:

a second organic layer on the second inorganic layer; and

a third inorganic layer on the second organic layer.

11. The organic light-emitting display apparatus of claim **10**, wherein an area of the first inorganic layer is greater than that of the first organic layer.

12. The organic light-emitting display apparatus of claim **10**, wherein the blocking layer covers the capping layer, an area of the first organic layer is greater than that of the blocking layer, and an area of the second organic layer is greater than that of the first organic layer.

13. The organic light-emitting display apparatus of claim **10**, wherein an area of each of the second inorganic layer and the third inorganic layer is greater than that of the first inorganic layer.

14. An organic light-emitting display apparatus comprising:

a substrate;

a display unit having a plurality of organic light-emitting devices on the substrate;

an encapsulating layer sealing up the display unit and comprising a porous inorganic layer, a first organic layer, and a second inorganic layer that are sequentially stacked; and

a protective layer between the display unit and the encapsulating layer,

wherein each of the plurality of organic light-emitting devices comprises:

a pixel electrode,

an intermediate layer on the pixel electrode, the intermediate layer comprising an organic emission layer, and

an opposite electrode on the intermediate layer, and

the protective layer comprises:

a capping layer covering the opposite electrode, and

a porous blocking layer on the capping layer.

15. The organic light-emitting display apparatus of claim **14**, wherein the capping layer is formed of an organic material.

16. The organic light-emitting display apparatus of claim **14**, wherein the porous blocking layer is formed of a lithium fluoride (LiF).

17. The organic light-emitting display apparatus of claim **14**, wherein the porous inorganic layer is formed of an aluminum oxide (AlO_x).

18. The organic light-emitting display apparatus of claim **14**, wherein the porous blocking layer covers the capping layer.

19. The organic light-emitting display apparatus of claim **18**, wherein an area of the first organic layer is greater than that of the porous blocking layer.

20. The organic light-emitting display apparatus of claim **14**, wherein an area of the porous inorganic layer is greater than that of the first organic layer.

21. The organic light-emitting display apparatus of claim **14**, wherein the encapsulating layer further comprises:

a second organic layer on the second inorganic layer; and

a third inorganic layer on the second organic layer.

22. The organic light-emitting display apparatus of claim **21**, wherein an area of the porous inorganic layer is greater than that of the first organic layer.

23. The organic light-emitting display apparatus of claim **21**, wherein the porous blocking layer covers the capping layer, an area of the first organic layer is greater than that of the porous blocking layer, and an area of the second organic layer is greater than that of the first organic layer.

24. The organic light-emitting display apparatus of claim **21**, wherein an area of each of the second inorganic layer and the third inorganic layer is greater than that of the porous inorganic layer.

25. A method of manufacturing an organic light-emitting display apparatus, the method comprising:

forming a display unit on a substrate, the display unit defining an active area and comprising an opposite electrode;

forming a capping layer to cover the opposite electrode;

forming a blocking layer on the capping layer; and

forming an encapsulating layer on the blocking layer to seal up the display unit.

26. The method of claim **25**, wherein the capping layer is formed of an organic material.

27. The method of claim **25**, wherein the blocking layer is formed of a lithium fluoride (LiF).

28. The method of claim **25**, wherein the blocking layer is formed to cover the capping layer.

29. The method of claim **25**, wherein the forming of the encapsulating layer comprises:

forming a first inorganic layer on the blocking layer;

forming a first organic layer on the first inorganic layer; and

forming a second inorganic layer on the first organic layer.

30. The method of claim **29**, wherein the first inorganic layer is formed of an aluminum oxide (AlO_x) by a sputtering method.

31. The method of claim **29**, wherein an area of the first inorganic layer is greater than that of the first organic layer.

32. The method of claim **29**, wherein the blocking layer is formed to cover the capping layer, and an area of the first organic layer is greater than that of the blocking layer.

33. The method of claim **29**, further comprising:

forming a second organic layer on the second inorganic layer; and

forming a third inorganic layer on the second organic layer,

wherein the second inorganic layer and the third inorganic layer are formed by a chemical vapor deposition (CVD) method.

34. The method of claim **33**, wherein an area of the first inorganic layer is greater than that of the first organic layer.

35. The method of claim **33**, wherein the blocking layer is formed to cover the capping layer, an area of the first organic layer is greater than that of the blocking layer, and an area of the second organic layer is greater than that of the first organic layer.

36. The method of claim **33**, wherein an area of each of the second inorganic layer and the third inorganic layer is greater than that of the first inorganic layer.

37. The method of claim **25**, wherein the blocking layer is formed of LiF having a pin-hole structure.

* * * * *