US 20150261370A1

(19) United States
(12) Patent Application Publication
YOO et al.
(10) Pub. No.: US 2015/0261370 A1
(43) Pub. Date: Sep. 17, 2015

(54) **TOUCH-SENSITIVE DISPLAY DEVICE**

(71) Applicant: **LG Display Co., Ltd.**, Seoul (KR)

(72) Inventors: **Sejong YOO**, Paju-si (KR); **NackBong CHOI**, Goyang-si (KR); **YongChul KIM**, Paju-si (KR); **Jonghyun HAN**, Paju-si (KR); **Haeyeon JEONG**, Osan-si (KR)

(21) Appl. No.: **14/586,813**

(22) Filed: **Dec. 30, 2014**

(30) **Foreign Application Priority Data**

Mar. 13, 2014 (KR) 10-2014-0029901
Jun. 27, 2014 (KR) 10-2014-0080094

Publication Classification

(51) **Int. Cl.**
G06F 3/041 (2006.01)

(52) **U.S. Cl.**
CPC ***G06F 3/0412*** (2013.01); *G06F 2203/04112* (2013.01); *G09G 2330/02* (2013.01)

(57) **ABSTRACT**

Disclosed herein is a touch-sensitive display device comprising: a first set of metal electrodes including a first metal electrode; a second set of metal electrodes including a second metal electrode and a third metal electrode, the first metal electrode located between the second metal electrode and the third metal electrode such that the second metal electrode is physically separated from the third metal electrode; a first set of touch electrodes including a first touch electrode that is connected to the first metal electrode; a second set of touch electrodes including a second touch electrode and a third touch electrode, the second touch electrode connected to the second metal electrode and the third touch electrode connected to the third metal electrode; an insulation film having a plurality of contact holes; and a connection electrode electrically connecting the second metal electrode to the third metal electrode through the plurality of contact holes.

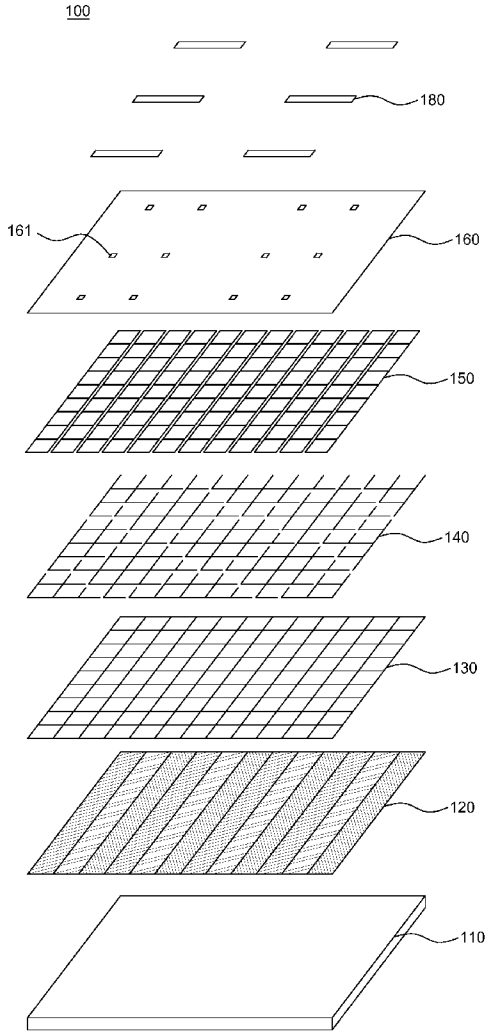

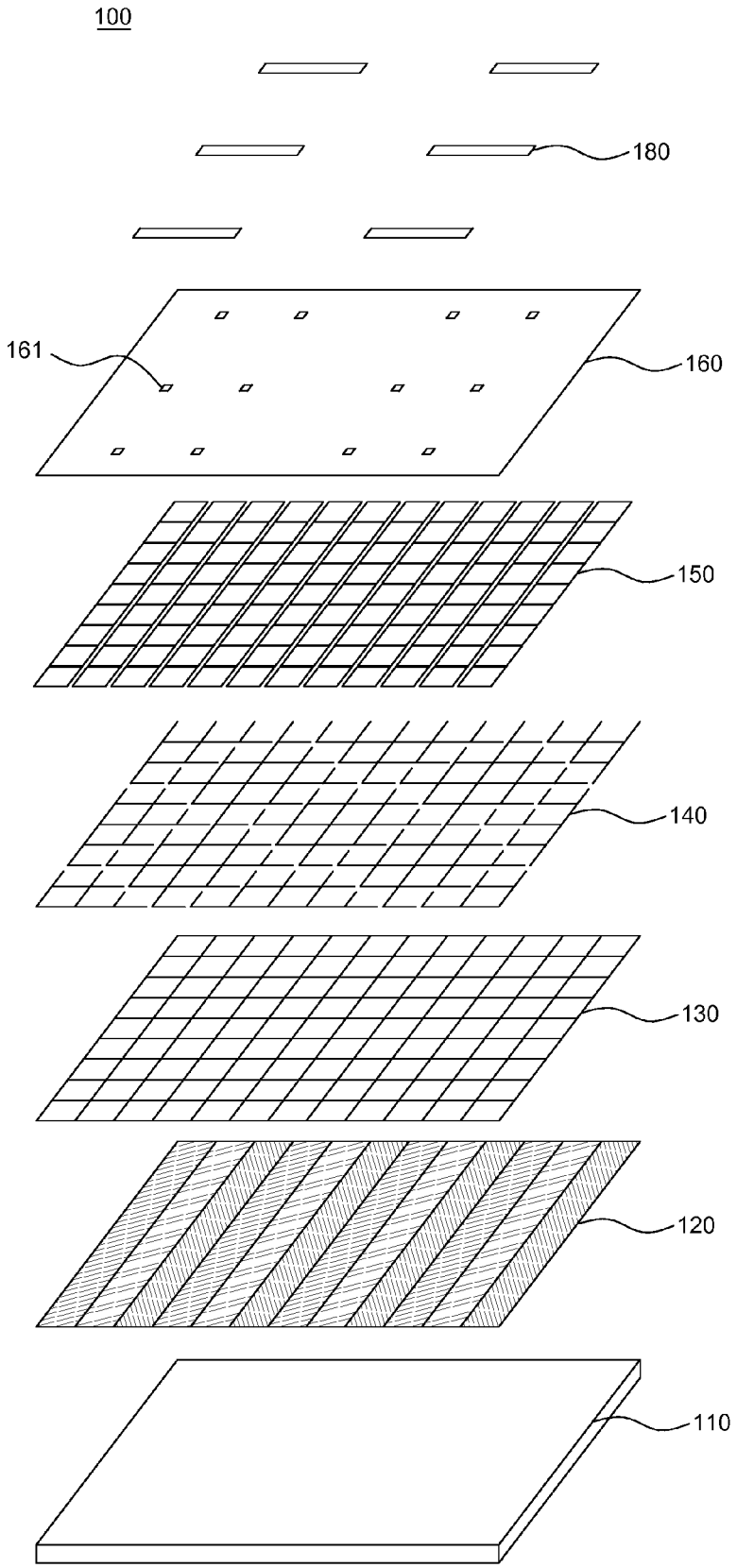

FIG. 1

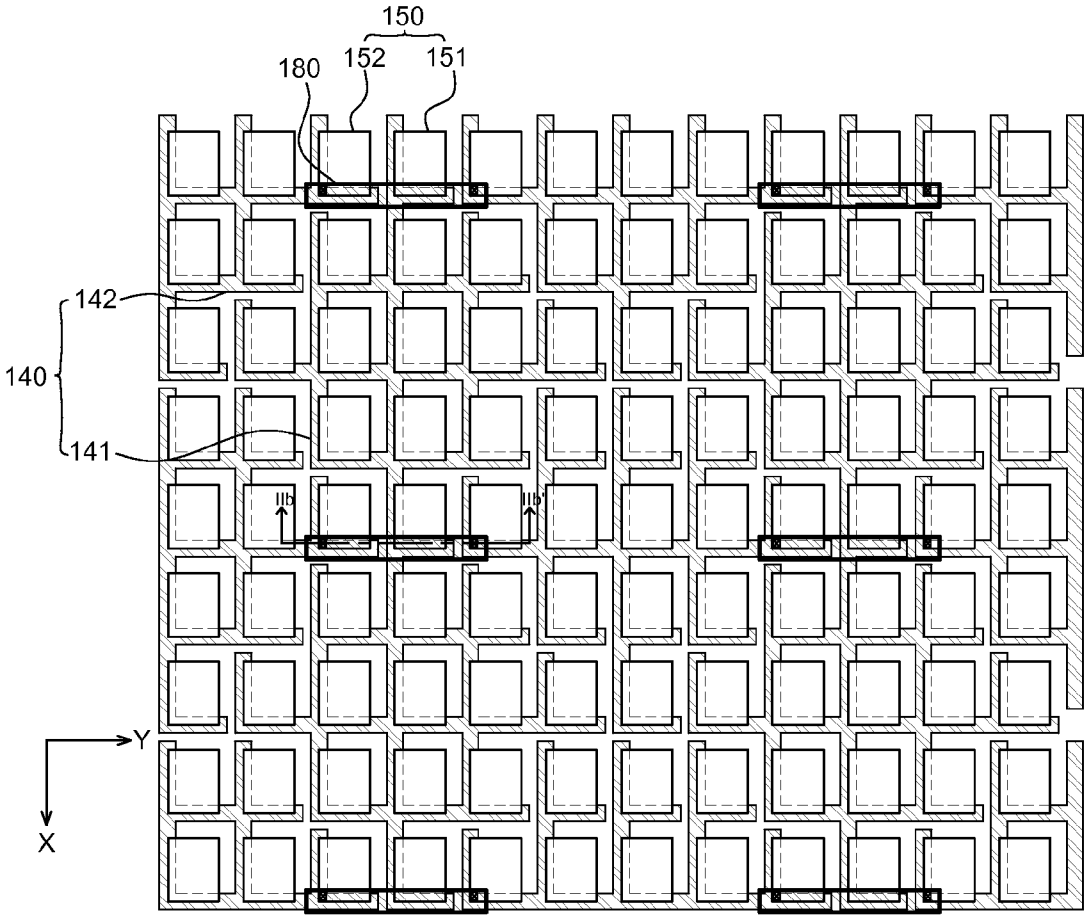

FIG. 2A

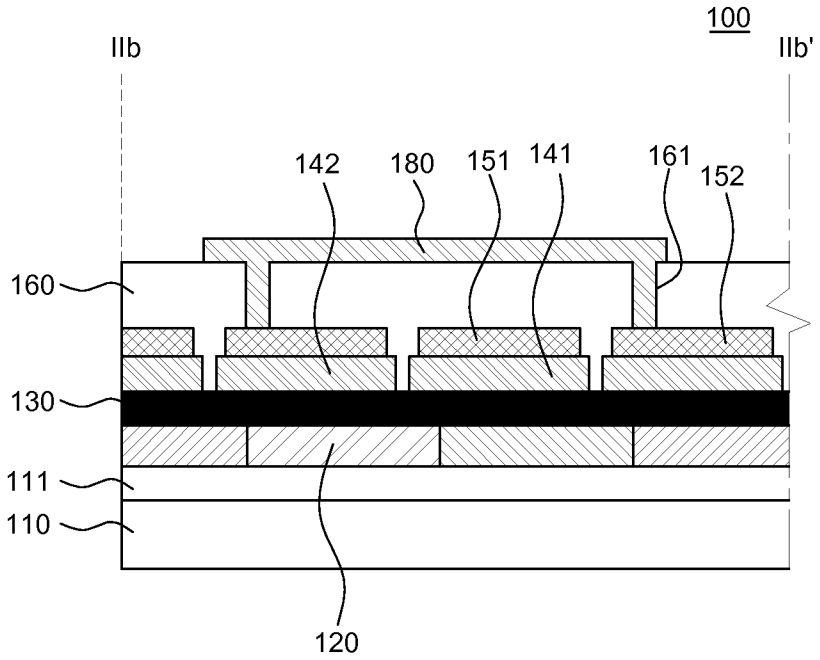

FIG. 2B

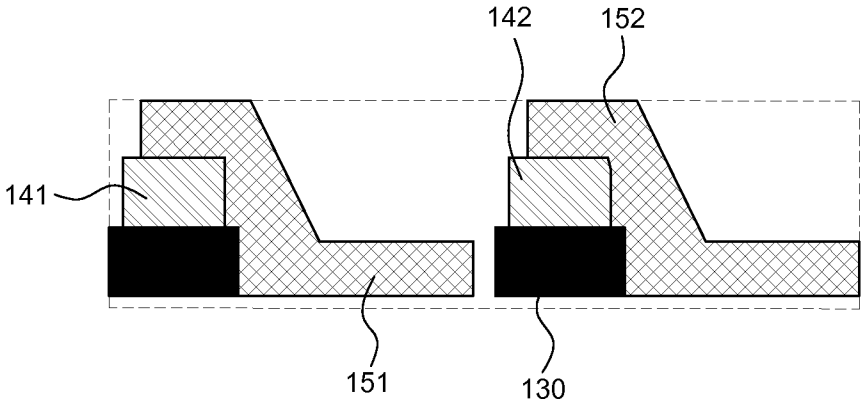

FIG. 3A

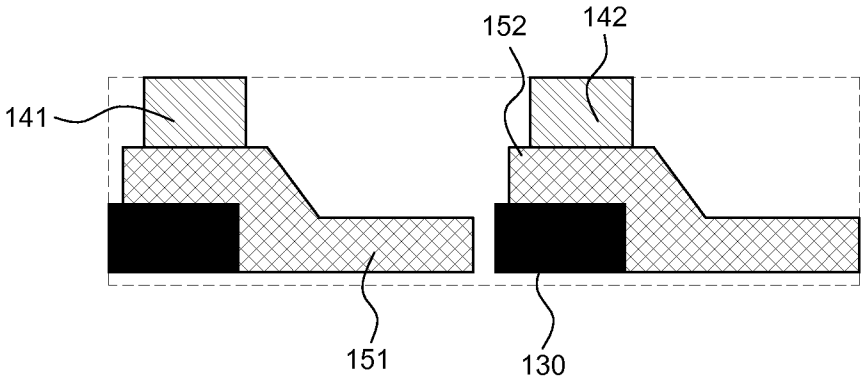

FIG. 3B

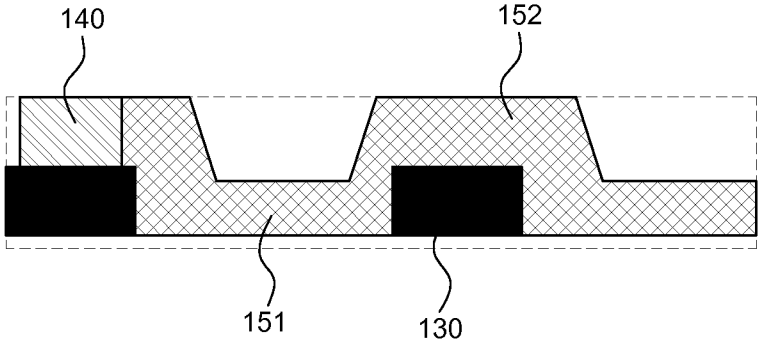

FIG. 3C

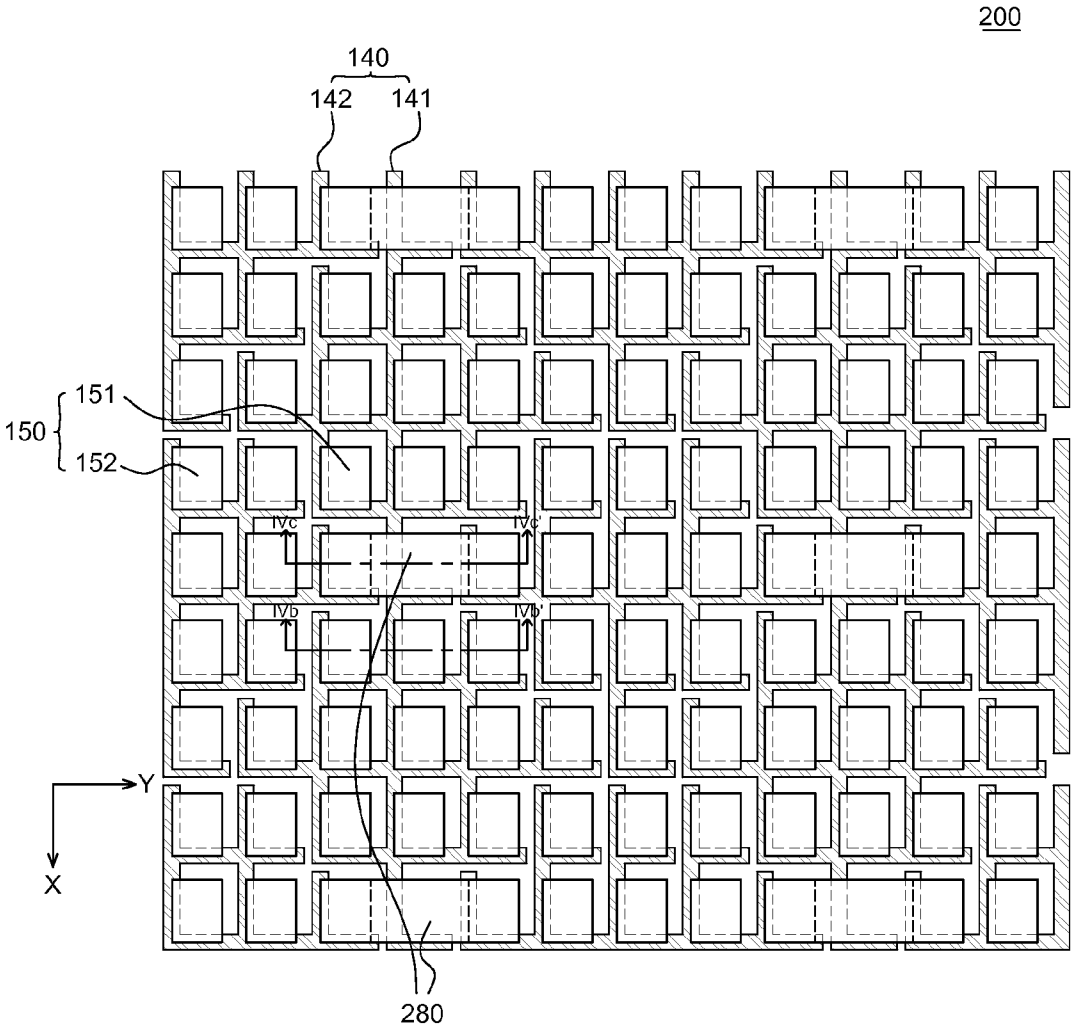

FIG. 4A

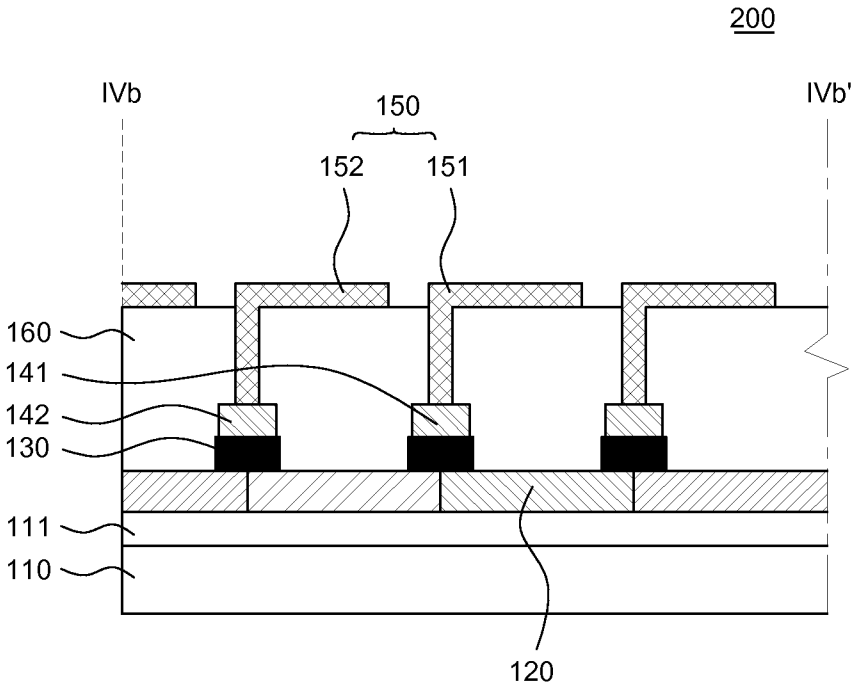

FIG. 4B

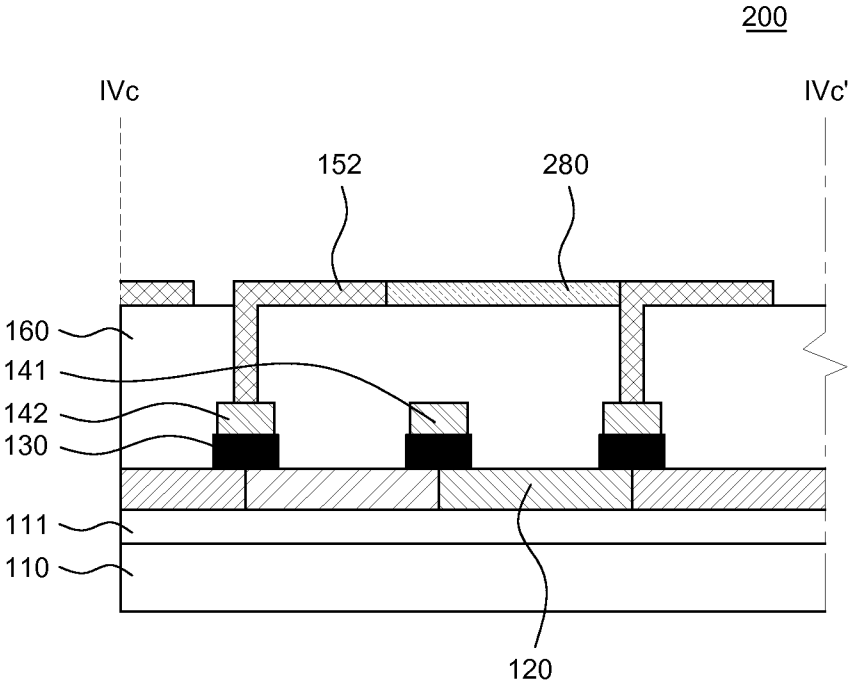

FIG. 4C

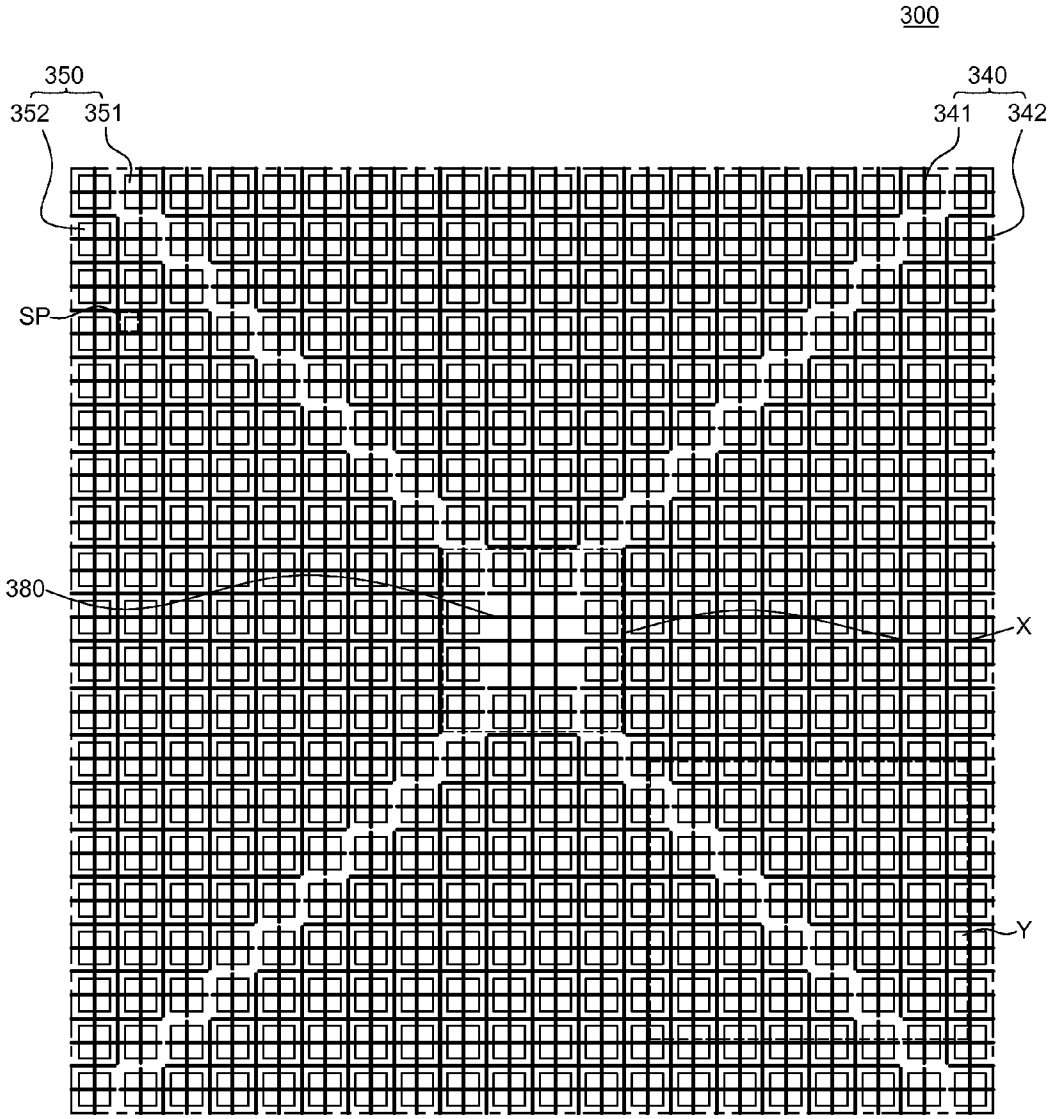

FIG. 5A

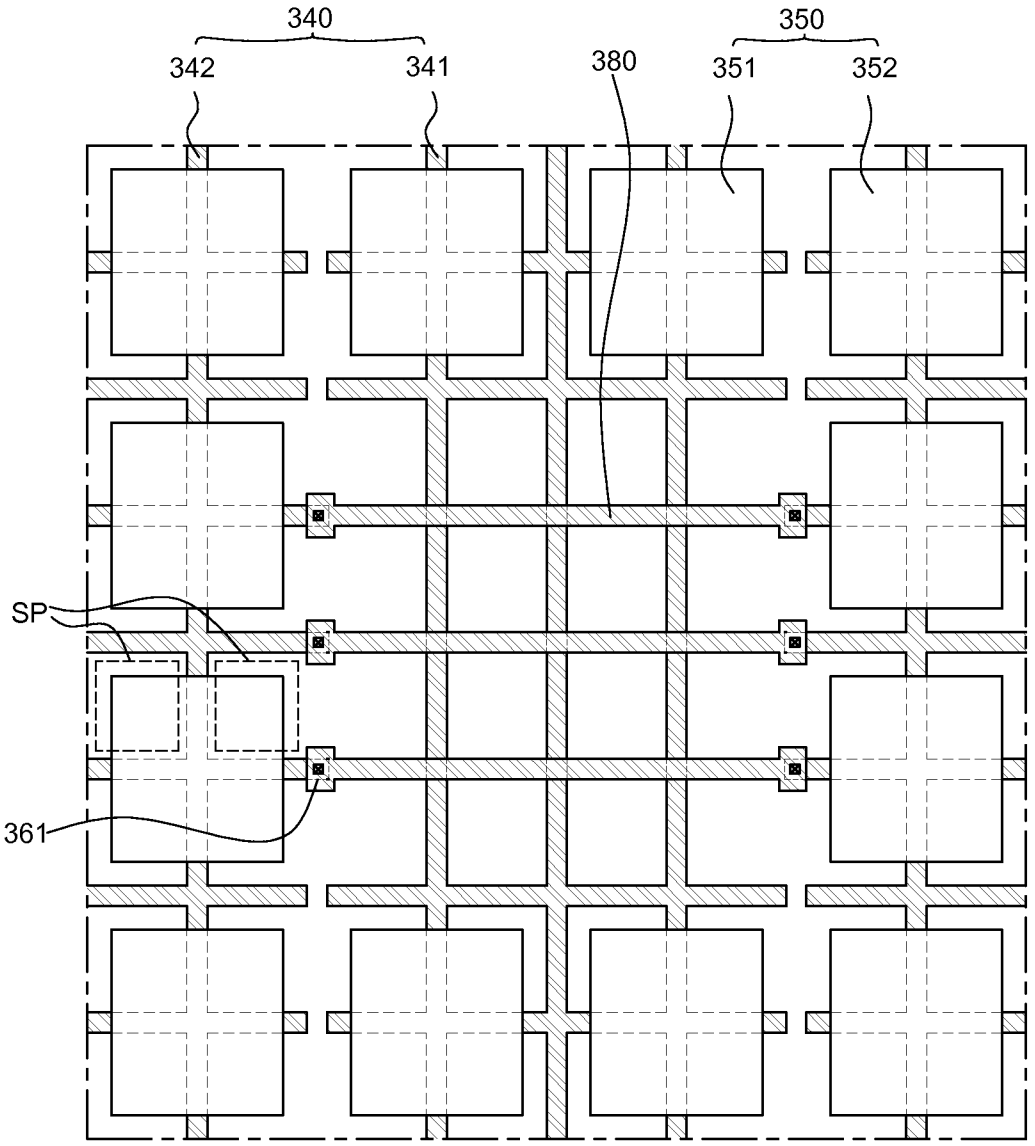

FIG. 5B

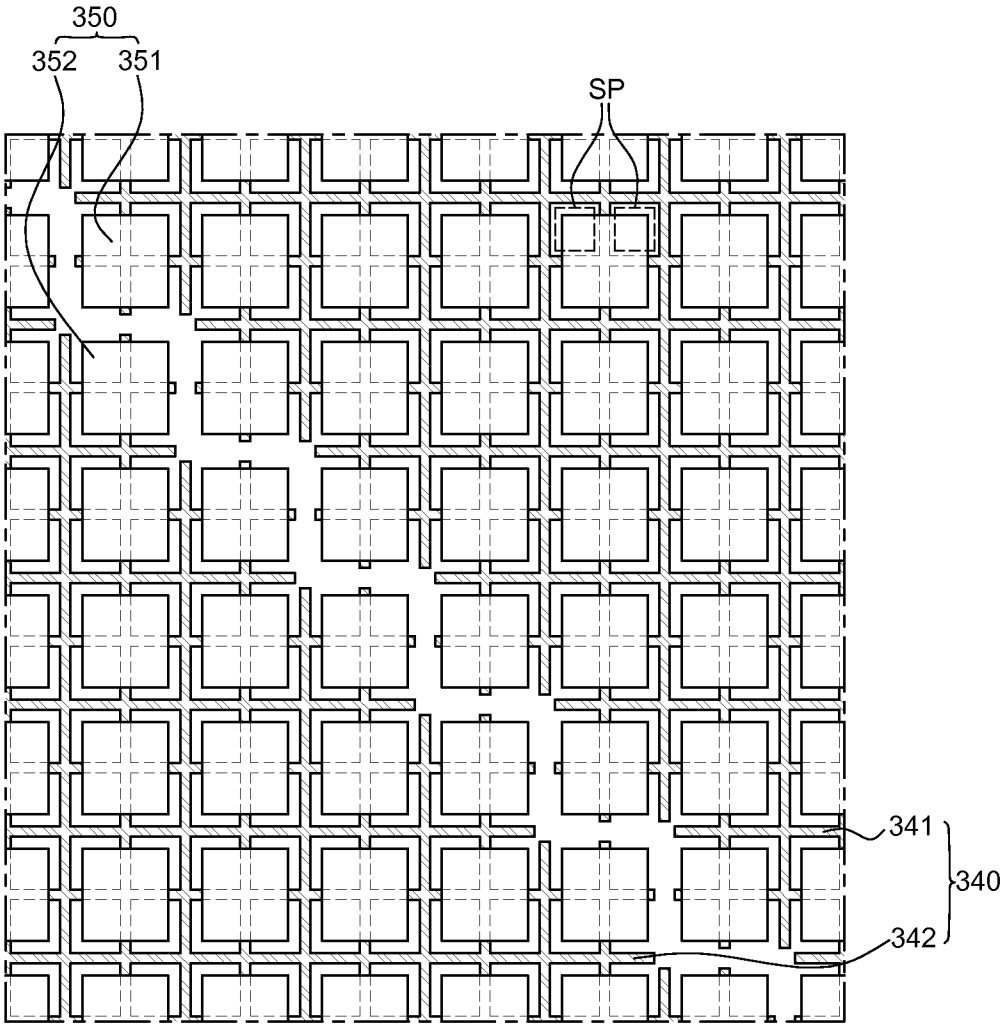

FIG. 5C

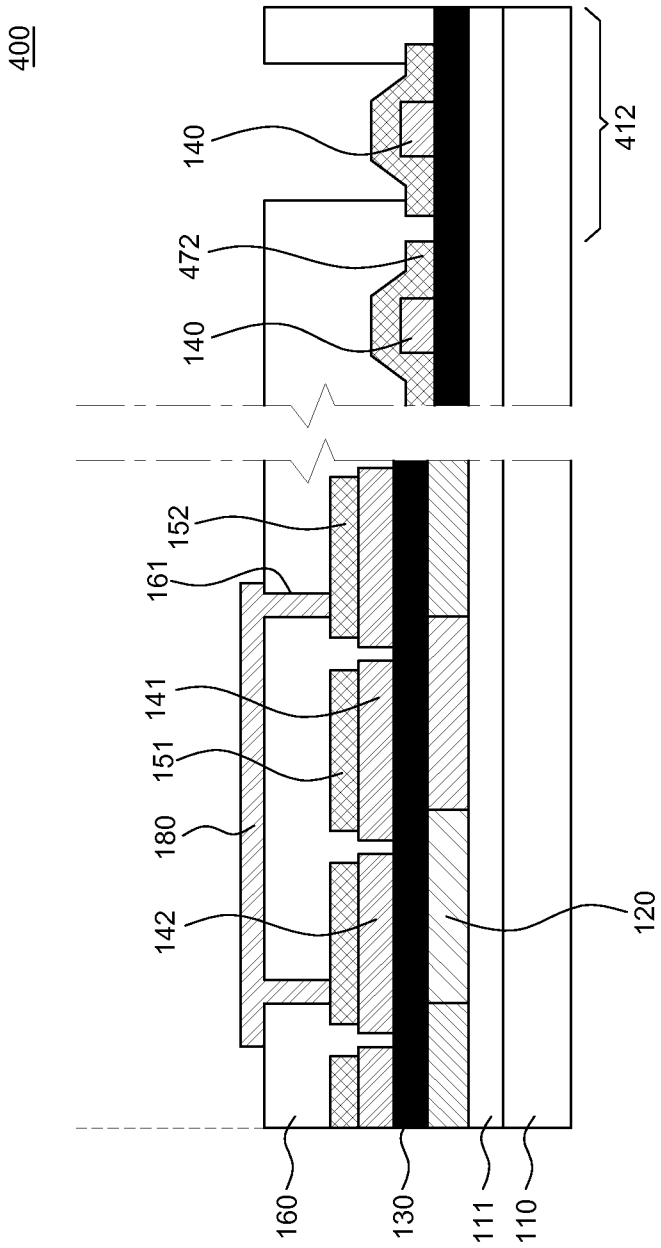

FIG. 6

TOUCH-SENSITIVE DISPLAY DEVICE

CROSS-REFERENCE TO RELATED APPLICATIONS

[0001] This application claims the priority of Korean Patent Application No. 10-2014-0029901 filed on Mar. 13, 2014 and Korean Patent Application No. 10-2014-0080094 filed on Jun. 27, 2014, in the Korean Intellectual Property Office, the disclosures of which are incorporated herein by reference in their entirety.

BACKGROUND

[0002] 1. Field of Technology

[0003] The present disclosure relates to a touch-sensitive display device, and more particularly to a touch-sensitive display device capable of minimizing cracks in touch electrodes possibly occurring in a flexible display and oxidation of wire electrodes, and of reducing power consumption for touch functionality.

[0004] 2. Description of the Related Art

[0005] A touch-sensitive display device senses a user's touch made on one or more points on its display screen and also senses an operation associated with the user's touch. Such a touch-sensitive display device is widely utilized in personal handheld devices such as smart phones and tablet PCs, as well as in large display devices such as display devices placed in public facilities and smart TVs.

[0006] A touch-sensitive display device can be sorted by its operation manner into: a resistive type, a capacitive type, an IR (infrared ray) type, etc. Recently, a capacitive touch-sensitive display device is commonly used.

[0007] Typically, a capacitive touch-sensitive display device includes a plurality of first electrodes extending in a first direction and a plurality of second electrodes extending in a second direction. The electrodes are made of a transparent and electrically-conductive material such as ITO (indium tin oxide) and IZO (indium zinc oxide). In a capacitive touch-sensitive display device, when a user makes a physical contact on the display device, capacitance of the first electrodes and the second electrodes around the contact position is changed and the contact position is detected based on the change in capacitance.

[0008] Recently, a touch-sensitive display device is being developed as a flexible display which has become thinner and bendable. Accordingly, research is on-going for such a flexible display to reduce cracks in touch electrodes or the like.

[0009] Transparent and electrically-conductive materials used for touch electrodes, such as ITO (indium tin oxide), are not appropriate to be implemented in a flexible display because they are less flexible than typical metal materials. In addition, transparent and electrically-conductive materials have higher surface resistance than that of metal materials, and thus resistance between electrodes becomes is increased in the process of manufacturing a touch-sensitive display device for high precision and a large screen. Consequently, detection sensitivity of a touch location becomes lower.

SUMMARY

[0010] ITO, one of the transparent electrically-conductive materials used for touch electrodes of a touch-sensitive display device, has higher resistance and lower flexibility than those of metal materials. Therefore, if a touch-sensitive display device that uses ITO as the material for its touch electrodes is applied to a flexible display, cracks may occur in the ITO. This may result in defects in the flexible display. In addition, due to ITO's higher resistance than that of metal materials, power consumption increases as a touch-sensitive display device becomes larger. Also, touch sensitivity is significantly decreased in the center portion of the display device which in return causes a slower response speed.

[0011] Under the circumstances, an object of the present disclosure is to provide a touch-sensitive display device with reduced power consumption for sensing touch and will also be applicable to a large touch-sensitive display device.

[0012] Another object of the present disclosure is to provide a touch-sensitive display device capable of minimizing cracks in touch electrodes when the display device is bent.

[0013] Objects of the present disclosure are not limited to those described above and other objects will be clearly understood by those skilled in the art from the following descriptions.

[0014] According to an aspect of the present disclosure, there is provided a touch-sensitive display device, comprising: a black matrix disposed on a substrate, the black matrix defining a plurality of pixels; a first set of metal electrodes patterned on the black matrix, the first set of metal electrodes including a first metal electrode having a first mesh pattern; a second set of metal electrodes patterned on the black matrix, the second set of metal electrodes including a second metal electrode having a second mesh pattern and a third metal electrode having a third mesh pattern, the first metal electrode located between the second metal electrode and the third metal electrode such that the second metal electrode is physically separated from the third metal electrode; an insulation film formed over the first set of metal electrodes and the second set of metal electrodes including the first metal electrode, the second metal electrode, and the third metal electrode, the insulation film having a plurality of contact holes; and a connection electrode electrically connecting the second metal electrode to the third metal electrode through the plurality of contact holes.

[0015] In some embodiments, the first mesh pattern, the second mesh pattern, and the third mesh pattern are distinct from one another.

[0016] In some embodiments, the first mesh pattern, the second mesh pattern, and the third mesh pattern are substantially the same.

[0017] In some embodiments, the first mesh pattern, the second mesh pattern, and the third mesh pattern each includes a plurality of electrode lines that intersect with one another to create the corresponding mesh pattern.

[0018] In some embodiments, the touch-sensitive display device may further comprise a barrier layer disposed between the substrate and the black matrix. The barrier layer may comprises at least one of an organic layer or an inorganic layer.

[0019] In some embodiments, the first set of metal electrodes may extend in a first direction, and the second set of metal electrodes may extend in a second direction.

[0020] In some embodiments, the touch-sensitive display device may further comprise a color filter disposed between the substrate and the black matrix.

[0021] In some embodiments, the first touch electrode includes a first plurality of segments that are connected to the first metal electrode, and wherein the second touch electrode includes a second plurality of segments that are connected to

the second metal electrode, and wherein the third touch electrode includes a third plurality of segments that are connected to the third metal electrode.

[0022] In some embodiments, a size of each of the first plurality of segments of the first touch electrode, a size of the second plurality of segments of the second touch electrode, and a size of the third plurality of segments of the third touch electrode are an integer multiple greater in size than a size of the pixels.

[0023] In some embodiments, each of the pixels may comprise a plurality of sub-pixels, and a size of each of the first plurality of segments of the first touch electrode, a size the second plurality of segments of the second touch electrode, and a size the third plurality of segments of the third touch electrode are an integer multiple greater than that of a size of the sub-pixels.

[0024] In some embodiments, at least one of the first plurality of segments of the first touch electrode overlaps at least one intersection of the plurality of electrode lines of the first mesh pattern, and wherein at least one of the second plurality of segments of the second touch electrode overlaps at least one intersection of the plurality of electrode lines of the second mesh pattern, and wherein at least one of the third plurality of segments of the third touch electrode overlaps at least one intersection of the plurality of electrode lines of the third mesh pattern.

[0025] In some embodiments, the connection electrodes may be disposed so that they are aligned with the black matrix.

[0026] According to another aspect of the present disclosure, there is provided a touch-sensitive display device with a color filter and a black matrix disposed on a substrate. The touch-sensitive display device comprising: a plurality of first metal electrodes disposed on the black matrix in a first direction; a plurality of second metal electrodes disposed on the black matrix in a second direction; an insulation film disposed over the plurality of first metal electrodes and the plurality of second metal electrodes, the insulation film having a plurality of contact holes in the insulation film; a plurality of first touch electrodes disposed on the insulation film, each of the plurality of first touch electrodes connected to a corresponding one of the plurality of first metal electrodes through one of the plurality of contact holes; a plurality of second touch electrodes disposed on the insulation film, each of the plurality of second touch electrodes connected to a corresponding one of the plurality of second metal electrodes through one of the plurality of contact holes, the plurality of second touch electrodes including a pair of second touch electrodes physically separated from one another; and a connection electrode disposed on the insulation film, the connection electrode electrically connecting together the pair of second touch electrodes.

[0027] In some embodiments, wherein one of the plurality of first metal electrodes is located between the pair of second touch electrodes and the one of the plurality of first metal electrodes physically separate the pair of second touch electrodes from each other.

[0028] In some embodiments, the connection electrode comprises expanded portions of the pair of second touch electrodes.

[0029] In some embodiments, apart of the connection electrode is located above a part of the one of the plurality of first metal electrodes located between the pair of second touch electrodes.

[0030] According to the present disclosure, there is provided a touch-sensitive display device, comprising: a flexible substrate comprising a plurality of pixels defined by a black matrix; a plurality of metal electrodes disposed on the black matrix, each of the plurality of metal electrodes including electrode lines that intersect one another; and a plurality of transparent touch electrodes disposed on the plurality of metal electrodes, each transparent touch electrode including a plurality of segments defined by an intersection of a plurality of the electrode lines, wherein each segment has a size equal to an integer multiple greater than that of a size of the pixels to distribute stress exerted on the transparent touch electrodes over the plurality of segments.

[0031] In some embodiments the intersection of the plurality of the electrode lines is located at a center of a corresponding transparent electrode.

[0032] In some embodiments, the touch-sensitive display device may further comprise: an insulation film formed over the plurality of metal electrodes.

[0033] In some embodiments, the plurality of metal electrodes extend to a pad unit that transmits a touch sensing signal.

[0034] In some embodiments, the touch-sensitive display device may further comprise: an anti-oxidation layer disposed on the pad unit, the anti-oxidation layer covering the plurality of extended metal electrodes to reduce oxidation of the metal electrodes, wherein the anti-oxidation layer is made of a same material as the plurality of transparent touch electrodes.

BRIEF DESCRIPTION OF THE DRAWINGS

[0035] The above and other aspects, features and other advantages of the present disclosure will be more clearly understood from the following detailed description taken in conjunction with the accompanying drawings, in which:

[0036] FIG. **1** is a schematic and exploded perspective view of a touch-sensitive display device according to an exemplary embodiment of the present disclosure;

[0037] FIG. **2**A is a schematic plan view of a part of a touch-sensitive display device according to an exemplary embodiment of the present disclosure;

[0038] FIG. **2**B is a schematic cross-sectional view of the touch-sensitive display device shown in FIG. **2**A, taken along the line IIb-IIb' according to an exemplary embodiment of the present disclosure;

[0039] FIGS. **3**A to **3**C are schematic cross-sectional views of various connection schemes between a first touch electrode and a first metal electrode and between a second touch electrode and a second metal electrode according to exemplary embodiments of the present disclosure;

[0040] FIG. **4**A is a schematic plan view of a part of a touch-sensitive display device according to another exemplary embodiment of the present disclosure;

[0041] FIG. **4**B is a schematic cross-sectional view of the touch-sensitive display device shown in FIG. **4**A, taken along line IVb-IVb' according to an exemplary embodiment of the present disclosure;

[0042] FIG. **4**C is a schematic cross-sectional view of the touch-sensitive display device shown in FIG. **4**A, taken along line IVc-IVc' according to an exemplary embodiment of the present disclosure;

[0043] FIG. **5**A is a schematic plan view of a touch-sensitive display device according to yet another exemplary embodiment of the present disclosure;

[0044] FIG. **5**B is an enlarged plan view of region X shown in FIG. **5**A according to an exemplary embodiment of the present disclosure;

[0045] FIG. **5**C is an enlarged plan view of region Y shown in FIG. **5**A according to an exemplary embodiment of the present disclosure; and

[0046] FIG. **6** is a schematic cross-sectional view of a touch-sensitive display device according to yet another exemplary embodiment of the present disclosure.

DETAILED DESCRIPTION

[0047] Advantages and features of the present disclosure and methods to achieve them will become apparent from the descriptions of exemplary embodiments herein below with reference to the accompanying drawings. However, the present disclosure is not limited to exemplary embodiments disclosed herein but may be implemented in various different ways. The exemplary embodiments are provided for making the disclosure thorough and for fully conveying the scope of the present invention to those skilled in the art. It is to be noted that the scope of the present invention is defined only by the claims.

[0048] The figures, dimensions, ratios, angles, numbers of elements given in the drawings are merely illustrative and are not limiting. Like reference numerals denote like elements throughout the descriptions. Further, in describing the present invention, descriptions on well-known technologies may be omitted in order not to obscure the gist of the present invention. It is to be noticed that the term "comprising", "having", including" and so on, used in the present description and claims, should not be interpreted as being restricted to the means listed thereafter unless specifically stated otherwise. Where an indefinite or definite article is used when referring to a singular noun, e.g. "a", "an", "the", this includes a plural of that noun unless specifically stated otherwise.

[0049] The drawings are not to scale and the relative dimensions of various elements in the drawings are depicted schematically and not necessarily to scale.

[0050] Features of various exemplary embodiments of the present invention may be combined partially or totally. As will be clearly appreciated by those skilled in the art, technically various interactions and operations are possible. Various exemplary embodiments can be practiced individually or in combination.

[0051] Hereinafter, exemplary embodiments of the present invention will be described in detail with reference to the accompanying drawings.

[0052] FIG. **1** is a schematic and exploded perspective view of a touch-sensitive display device according to an exemplary embodiment. FIG. **2**A is a schematic plan view of a part of a touch-sensitive display device according to an exemplary embodiment. FIG. **2**B is a schematic cross-sectional view of the touch-sensitive display device shown in FIG. **2**A, taken along line IIb-IIb' according to an exemplary embodiment.

[0053] Referring to FIG. **1**, a touch-sensitive display device **100** includes a substrate **110**, a color filter **120**, a black matrix **130**, metal electrodes **140**, touch electrodes **150**, an insulation film **160**, and connection electrodes **180**.

[0054] In FIG. **1**, the thickness and width of the black matrix **130**, first touch electrodes **151**, second touch electrodes **152** and the connection electrodes **180** are not depicted for the sake of simplicity of illustration. The thickness and width of the black matrix **130**, the first touch electrodes **151**, the second touch electrodes **152** and the connection electrodes **180** may vary depending on design choices.

[0055] The color filter **120**, which is included in the touch-sensitive display device **100** shown in FIG. **1**, is not an essential element but is an optional one that may be employed depending on the type of light-emitting elements of the touch-sensitive display device **100**.

[0056] Referring to FIG. **1**, the touch-sensitive display device **100** including the color filter **120** will be described. Referring to FIGS. **1** and **2**B, a barrier layer **111** is disposed on the substrate **110**. The barrier layer **111** is formed on the substrate **110** for preventing moisture and oxygen from permeating into the substrate **110** and it may be formed as a plurality of layers composed of inorganic layers such as silicon nitride (SiN_x) or organic layers.

[0057] The color filter **120** is formed on the barrier layer **111**. The black matrix **130** is formed on the color filter **120** in a mesh pattern so that pixels of the touch-sensitive display device **100** are defined.

[0058] The metal electrodes **140** are formed on the black matrix **130** in a mesh pattern and may be patterned so as to form a plurality of electrodes.

[0059] Various patterns of the metal electrodes **140** will be described later on.

[0060] To reduce electrical resistance of the metal electrodes **140**, the metal electrodes **140** may be made of a metal material having low resistance such as copper (Cu) and silver (Ag). In this regard, since metal materials have high reflectivity for light incident thereon, the metal electrodes **140** are located on the backside of the black matrix **130** when viewed by a viewer, in order that the light incident thereon neither deteriorates the visibility nor adversely affects the aperture ratio of the touch-sensitive display device **100**.

[0061] The touch electrodes **150** are formed on the metal electrodes **140**.

[0062] The size of each of the touch electrodes **150** is an integer greater than that of sub-pixels or pixels defined by the black matrix **130**.

[0063] The insulation film **160** having a plurality of apertures **161** (e.g. holes) therein is formed on the touch electrodes **150**, and the connection electrodes **180** are formed on the insulation film **160** so that the metal electrodes **140** and the connection electrodes **180** are connected to one another via the plurality of apertures **161** (e.g., holes) in the insulation film **160**.

[0064] The touch electrodes **150** are made of a transparent and electrically-conductive material. For example, the touch electrodes **150** may be made of a transparent and electrically-conductive oxide, such as ITO (indium tin oxide) and IZO (indium zinc oxide).

[0065] Referring to FIGS. **2**A and **2**B, the metal electrodes **140** include the first metal electrodes **141** and the second metal electrodes **142**.

[0066] The first metal electrodes **141** are formed as a plurality of electrode lines intersecting with one another in a mesh pattern. The first metal electrodes **141** extend in a first direction (e.g., x-axis direction).

[0067] The second metal electrodes **142** are formed as a plurality of electrode lines intersecting with one another in a mesh pattern. In one embodiment, the second metal electrodes **142** each have a different mesh pattern. Alternatively, the second metal electrodes **142** have the same mesh pattern. Furthermore, the mesh pattern of the second metal electrodes **142** may be different from the mesh pattern of the first metal

electrodes **141**. Alternatively, the mesh pattern of the second metal electrodes **142** is the same as the mesh pattern of the first metal electrodes **141**. The second metal electrodes **142**, however, are disconnected from one another at intersections with the first metal electrodes **141** and are connected to one another through the connection electrodes **180**. That is, second metal electrodes including a pair of second metal electrodes **142** (e.g., a second metal electrode and a third metal electrode) are physically separated from one another due to a first metal electrode **141** (e.g., a first metal electrode) being located between the pair of second metal electrodes **142**. The second metal electrodes **142** extend in a second direction (e.g., Y-axis direction).

[0068] The touch electrodes **150** include first touch electrodes **151** and second touch electrodes **152**. The first touch electrodes **151** are connected to the first metal electrodes **141** and the second touch electrodes **152** are connected to the second metal electrodes **142**.

[0069] The touch electrodes **150** are connected to the metal electrodes **140** in such a manner that the first touch electrodes **151** and the second touch electrodes **152**, which are segments of the touch electrodes **150**, partially overlap the electrode lines of the metal electrodes **140** to connect them.

[0070] FIGS. **3**A to **3**C are schematic cross-sectional views of various connection schemes between a first touch electrode and a first metal electrode and between a second touch electrode and a second metal electrode according to exemplary embodiments of the present disclosure.

[0071] Referring to FIG. **3**A, a first metal electrode **141** and a second metal electrode **142** are formed on the black matrix, and a first touch electrode **151** and a second touch electrode **152** are disposed on and connected to the first metal electrode **141** and the second metal electrode **142** respectively.

[0072] Referring to FIG. **3**B, a first touch electrode **151** and a second touch electrode **152** partially overlap the black matrix. A first metal electrode **141** and a second metal electrode **142** are formed on the first touch electrode **151** and on the second touch electrode **152** above the black matrix **130** respectively.

[0073] FIG. **3**C is a cross-sectional view showing another connection scheme between the touch electrodes **150** and the metal electrodes **140** according to an exemplary embodiment of the present disclosure. A metal electrode **140** is formed on the black matrix **130**, and a side surface of the metal electrode **140** is in contact with a side surface of a touch electrode **150** on the black matrix.

[0074] FIG. **4**A is a schematic plan view of a part of a touch-sensitive display device according to another exemplary embodiment of the present disclosure. The touch-sensitive display device **200** shown in FIG. **4**A is identical to the touch-sensitive display device **100** shown in FIG. **2**A except for the connection electrodes and the way in which touch electrodes **150** and metal electrodes **140** are connected to one another and therefore, redundant descriptions will not be made.

[0075] Referring to FIG. **4**A, the second metal electrodes **142** are disconnected from one another at intersections with the first metal electrodes **141** and are connected to one another through the connection electrodes **280**. The first metal electrodes **141** and the second metal electrodes **142** are formed in a mesh type. The connection electrodes **280** are formed by expanding the second touch electrodes **152** and are made of the same material as that of the first touch electrodes **151** and the second touch electrodes **152** in order to sense touch.

[0076] FIG. **4**B is a schematic cross-sectional view of the touch-sensitive display device shown in FIG. **4**A, taken along the line IVb-IVb' according to an exemplary embodiment. FIG. **4**C is a schematic cross-sectional view of the touch-sensitive display device shown in FIG. **4**A, taken along the line IVc-IVc' according to an exemplary embodiment.

[0077] Referring to FIG. **4**B, the black matrix **130** is formed on the color filter **120**. On the black matrix **132**, first metal electrodes **141** and second metal electrodes **142** are formed. An insulation film **160** having a plurality of contact holes **161** therein is formed over the color filter **120**, the first metal electrodes **141** and the second metal electrodes **142**.

[0078] Further, on the insulation film **160**, first touch electrodes **151** and second touch electrodes **152** are formed. The first metal electrodes **141** and the second metal electrodes **142** are connected to the first touch electrodes **151** and the second touch electrodes **142**, respectively, through the contact holes **161**.

[0079] Referring to FIG. **4**C, in order to connect second metal electrodes **142** which are disconnected from one another at intersections with a first metal electrode **141**, a connection electrode **280** is formed by expanding a second touch electrode **152**. The connection electrode **280** connects the second metal electrodes **142** that are disconnected from one another through the second touch electrode **152**. Although the hatching of the connection electrode **280** is different from that of the second touch electrode **152** in FIG. **4**C, the connection electrode **280** and the second touch electrode **152** may be made of the same material and may be formed integrally.

[0080] FIG. **5**A is a schematic plan view of a touch-sensitive display device according to yet another exemplary embodiment of the present disclosure. The touch-sensitive display device **300** shown in FIG. **5**A is identical to the touch-sensitive display device **100** shown in FIG. **2**A except for the way in which touch electrodes **350** and metal electrodes **340** are connected to one another and therefore, redundant descriptions will not be made.

[0081] Referring to FIG. **5**A, each of segments of the touch electrodes **350** overlaps an intersection of electrode lines of the metal electrodes **340** and is connected to another segment. As shown in FIG. **5**B, each of segments of the first touch electrode **351** and the second touch electrode **352** of the touch electrodes **350** overlaps an intersection between a first metal electrode **341** and a second metal electrode **342** of the metal electrodes **340**, having its center on the intersection. By doing so, the total surface resistance of the touch electrodes **350** is reduced, while cracks occurring in the touch electrodes **350** in a flexible environment are minimized. In the example of FIG. **5**A, one touch electrode **350** covers four sub-pixels (SPs). However, the size of a touch electrode **350** is not limited thereto. For example, one touch electrode **350** may cover one or more sub-pixels (SPs) or may cover a single pixel.

[0082] FIG. **5**B is an enlarged plan view of region X shown in FIG. **5**A.

[0083] Referring to FIG. **5**B, the second metal electrodes **342** are separated from one another at intersections with the first metal electrodes **341** and are connected to one another through the connection electrodes **380**. Although not shown in FIG. **5**B, the insulation film **160** as shown in FIG. **2**B may be formed on the first metal electrodes **341** so that the connection electrodes **380** may be insulated from the first metal electrodes **341**.

[0084] As shown in FIG. **5**B, one or more connection electrodes **380** may be formed, which may be made of aluminum (Al) or molybdenum (Mo) or the like.

[0085] FIG. **5**C is an enlarged plan view of region Y shown in FIG. **5**A.

[0086] Referring to FIG. **5**C, the first metal electrodes **341** and the second metal electrodes **342** in a mesh pattern are separated from one another. The touch electrodes **350** are divided into the first touch electrodes **351** and the second touch electrodes **352**. Each of the touch electrodes **350** has a plurality of segments. Each of the plurality of segments has a size equal to an integer multiple greater than that of a sub-pixel (SP). In FIG. **5**C, each of the plurality of segments has a size equal to four times a size of a sub-pixel (SP). However, the size of one touch electrode **350** is not limited thereto. For example, one touch electrode **350** may cover one or more sub-pixels (SPs) or may cover one pixel.

[0087] FIG. **6** is a schematic cross-sectional view of a touch-sensitive display device according to yet another exemplary embodiment of the present disclosure. The touch-sensitive display device **400** shown in FIG. **6** is identical to the touch-sensitive display device **100** shown in FIG. **2**B except that the touch-sensitive display device **400** shown in FIG. **6** further includes an anti-oxidation layer **472** and a pad unit **412**; and, therefore, redundant descriptions will not be made.

[0088] By employing a substrate **110** made of a flexible material such as plastic, the touch-sensitive display device **100** can be implemented as a flexible display device.

[0089] Although not shown in FIG. **6**, in order to enhance adhesion of the metal electrodes **140** and the touch electrodes **150** in a flexible environment, an adhesion-enhancing layer (not shown) made of, for example, silicon oxide (SiO_2), maybe formed between the metal and touch electrodes **140** and **150** and the substrate **110** or between the metal and touch electrodes **140** and **150** and the color filter **120**.

[0090] The connection electrodes **180** are connected to the second touch electrodes **152** or to the second metal electrodes **142** through the contact holes **161** in the insulation film **160**, thereby electrically connecting the second metal electrodes **142** to one another at intersections with the first metal electrodes **141**. In FIG. **6**, the connection electrodes **180** are connected to the second touch electrodes **152**.

[0091] The metal electrodes **140** are extended to the pad unit **412** to transmit a touch sensing signal to a circuit unit. The extended metal electrodes **140** are exposed to the outside, and they may be covered by the anti-oxidation layer **427** to minimize oxidation of the exposed portion of the metal electrodes **140**. The anti-oxidation layer **472** is made of the same material as the touch electrodes **150**.

[0092] The insulation film **160** may be an organic insulation film such as PAC. In this regard, oxygen and moisture may be created due to residual gas used in a patterning process such as forming the contact holes **161** in the insulation film **160**. Further, moisture may be created in an organic material of the insulation film **160** over time. Therefore, the metal electrodes **140** not covered by the touch electrodes **150** may be more vulnerable to moisture and oxygen contained in residual gas possibly produced in a process of forming the insulation film **160** and to the moisture coming from an organic material over time. Accordingly, an additional anti-oxidation layer (not shown) for preventing oxidation of the metal electrodes **140** may be formed on the metal electrodes **140** and the touch electrodes **150**. The additional anti-oxidation layer may be made of one selected from a group consisting of silicon nitride (SiN_x), aluminum oxide (Al_2O_3) and silicon oxide (SiO_2). If the additional anti-oxidation layer is formed, contact holes may be formed in the additional anti-oxidation layer in order to connect the connection electrodes **180** to the second metal electrodes **142** or to the second touch electrodes **152**. In doing so, the contact holes formed in the additional anti-oxidation layer conform to the contact holes **161** formed in the insulation film **160**.

[0093] According to the present disclosure, each of touch electrodes is divided into a plurality of segments so that stress exerted when the touch electrodes are bent can be distributed over the segments.

[0094] In addition, according to the present disclosure, by employing metal electrodes, high touch sensitivity can be achieved with low voltage and power consumption can be saved accordingly.

[0095] It should be noted that effects of the present invention are not limited to those described above and other effects of the present invention will be apparent to those skilled in the art from the following descriptions.

[0096] Thus far, exemplary embodiments of the present disclosure have been described in detail with reference to the accompanying drawings. However, the present disclosure is not limited to the exemplary embodiments, and modifications and variations can be made thereto without departing from the technical idea of the present invention. Accordingly, the exemplary embodiments described herein are merely illustrative and are not intended to limit the scope of the present invention. The technical idea of the present invention is not limited by the exemplary embodiments. Therefore, it should be understood that the above-described embodiments are not limiting but illustrative in all aspects. The scope of protection sought by the present invention is defined by the appended claims and all equivalents thereof are construed to be within the true scope of the present invention.

What is claimed is:

1. A touch-sensitive display device comprising:

a black matrix disposed on a substrate, the black matrix defining a plurality of pixels;

a first set of metal electrodes patterned on the black matrix, the first set of metal electrodes including a first metal electrode having a first mesh pattern;

a second set of metal electrodes patterned on the black matrix, the second set of metal electrodes including a second metal electrode having a second mesh pattern and a third metal electrode having a third mesh pattern, the first metal electrode located between the second metal electrode and the third metal electrode such that the second metal electrode is physically separated from the third metal electrode;

a first set of touch electrodes, the first set of touch electrodes including a first touch electrode that is connected to the first metal electrode;

a second set of touch electrodes including a second touch electrode and a third touch electrode, the second touch electrode connected to the second metal electrode and the third touch electrode connected to the third metal electrode;

an insulation film formed over the first set of metal electrodes and the second set of metal electrodes including the first metal electrode, the second metal electrode, and the third metal electrode, the insulation film having a plurality of contact holes; and

a connection electrode electrically connecting the second metal electrode to the third metal electrode through the plurality of contact holes.

2. The touch-sensitive display device according to claim **1**, wherein the first mesh pattern, the second mesh pattern, and the third mesh pattern are distinct from one another.

3. The touch-sensitive display device according to claim **1**, wherein the first mesh pattern, the second mesh pattern, and the third mesh pattern are substantially the same.

4. The touch-sensitive display device according to claim **1**, wherein the first mesh pattern, the second mesh pattern, and the third mesh pattern each includes a plurality of electrode lines that intersect with one another to create the corresponding mesh pattern.

5. The touch-sensitive display device according to claim **1**, further comprising:

a barrier layer disposed between the substrate and the black matrix, the barrier layer comprising at least one of an organic layer or an inorganic layer.

6. The touch-sensitive display device according to claim **1**, wherein the first set of metal electrodes extend in a first direction, and the second set of metal electrodes extend in a second direction.

7. The touch-sensitive display device according to claim **1**, further comprising:

a color filter disposed between the substrate and the black matrix.

8. The touch-sensitive display device according to claim **4**, wherein the first touch electrode includes a first plurality of segments that are connected to the first metal electrode, and wherein the second touch electrode includes a second plurality of segments that are connected to the second metal electrode, and wherein the third touch electrode includes a third plurality of segments that are connected to the third metal electrode.

9. The touch-sensitive display device according to claim **8**, wherein a size of each of the first plurality of segments of the first touch electrode, a size of the second plurality of segments of the second touch electrode, and a size of the third plurality of segments of the third touch electrode are an integer multiple greater in size than a size of the pixels.

10. The touch-sensitive display device according to claim **8**,

wherein each of the pixels comprises a plurality of sub-pixels, and

wherein a size of each of the first plurality of segments of the first touch electrode, a size the second plurality of segments of the second touch electrode, and a size the third plurality of segments of the third touch electrode are an integer multiple greater than that of a size of the sub-pixels.

11. The touch-sensitive display device according to claim **8**,

wherein at least one of the first plurality of segments of the first touch electrode overlaps at least one intersection of the plurality of electrode lines of the first mesh pattern, and wherein at least one of the second plurality of segments of the second touch electrode overlaps at least one intersection of the plurality of electrode lines of the second mesh pattern, and wherein at least one of the third plurality of segments of the third touch electrode overlaps at least one intersection of the plurality of electrode lines of the third mesh pattern.

12. The touch-sensitive display device according to claim **1**, wherein the connection electrodes are disposed so that they are aligned with the black matrix.

13. A touch-sensitive display device with a color filter and a black matrix disposed on a substrate, the touch-sensitive display device comprising:

a plurality of first metal electrodes disposed on the black matrix in a first direction;

a plurality of second metal electrodes disposed on the black matrix in a second direction;

an insulation film disposed over the plurality of first metal electrodes and the plurality of second metal electrodes, the insulation film having a plurality of contact holes in the insulation film;

a plurality of first touch electrodes disposed on the insulation film, each of the plurality of first touch electrodes connected to a corresponding one of the plurality of first metal electrodes through one of the plurality of contact holes;

a plurality of second touch electrodes disposed on the insulation film, each of the plurality of second touch electrodes connected to a corresponding one of the plurality of second metal electrodes through one of the plurality of contact holes, the plurality of second touch electrodes including a pair of second touch electrodes physically separated from one another; and

a connection electrode disposed on the insulation film, the connection electrode electrically connecting together the pair of second touch electrodes.

14. The touch-sensitive display device according to claim **13**, wherein one of the plurality of first metal electrodes is located between the pair of second touch electrodes and the one of the plurality of first metal electrodes physically separate the pair of second touch electrodes from each other.

15. The touch-sensitive display device according to claim **13**, wherein the connection electrode comprises expanded portions of the pair of second touch electrodes.

16. The touch-sensitive display device according to claim **14**, wherein a part of the connection electrode is located above a part of the one of the plurality of first metal electrodes located between the pair of second touch electrodes.

17. A touch-sensitive display device, comprising:

a flexible substrate comprising a plurality of pixels defined by a black matrix;

a plurality of metal electrodes disposed on the black matrix, each of the plurality of metal electrodes including electrode lines that intersect one another; and

a plurality of transparent touch electrodes disposed on the plurality of metal electrodes, each transparent touch electrode including a plurality of segments defined by an intersection of a plurality of the electrode lines, wherein each segment has a size equal to an integer multiple greater than that of a size of the pixels to distribute stress exerted on the transparent touch electrodes over the plurality of segments.

18. The touch-sensitive display device according to claim **17**, wherein the intersection of the plurality of the electrode lines is located at a center of a corresponding transparent electrode.

19. The touch-sensitive display device according to claim **17**, further comprising:

an insulation film formed over the plurality of metal electrodes.

20. The touch-sensitive display device according to claim **17**, wherein the plurality of metal electrodes extend to a pad unit that transmits a touch sensing signal.

21. The touch-sensitive display device according to claim **19**, further comprising:

an anti-oxidation layer disposed on the pad unit, the anti-oxidation layer covering the plurality of extended metal electrodes to reduce oxidation of the metal electrodes, wherein the anti-oxidation layer is made of a same material as the plurality of transparent touch electrodes.

* * * * *