Check for updates

Projected-Capacitive Touch Technology

Projected-capacitive touch has grown extremely rapidly from obscurity in 2006 to the number-two touch technology in 2009. This article examines all aspects of projected-capacitive touch technology, delving into sensor, controller, and module details.

by Gary Barrett and Ryomei Omote

THE ADVENT of the iPhone has ushered in a seismic change in the touch-screen business. Projected capacitive (pro-cap), the touch technology used in the iPhone touch screen, has become the first choice for many small-to-medium (<10-in.) touch-equipped products now in development. The technology is not just Apple-trendy but incorporates some of the best characteristics of competing touch technologies.

The three most important advantages of pro-cap technology are as follows:

- High durability (long life)
- Excellent optical performance (high transmissivity)
- Unlimited multi-touch (controller-dependent)

Pro-cap touch screens can be made entirely of plain glass, allowing them to be immune to most chemicals, operated in extreme temperatures, and sealed to meet the requirements for most wash-down and explosive environments. Pro-cap touch screens can also be made entirely of plastic, allowing them to be virtually unbreakable and have the flexibility to be contoured or bent. The sensing range of pro-cap touch screens can be extended, allowing them to be used with cotton or surgical gloves. Pro-cap touch-screens have the capability of sensing as many fingers as can fit on the screen.

The three major disadvantages of pro-cap technology are as follows:

- Difficulty of integration (noise sensitivity)
- Finger-touch only (although this may be changing)
- Relatively high cost (dropping rapidly)

Because they must sense changes in capacitance as small as a few femtofarads (10^{-15} F), pro-cap touch screens are very sensitive to electromagnetic interference (EMI). This makes integration challenging, particularly when the touch screen is bonded to an LCD, and also makes screens larger than about 22 in. (diagonal) very difficult to build. Pro-cap touch screens rely on human-body capacitance to cause a touch to be recognized, so they currently require a human as the touch object. Finally, a typical smartphone pro-cap touch screen (3.5 in.) is currently about three times more expensive than its analog-resistive equivalent – although that difference could drop by half in as little as 2 years.

Gary Barrett *is the Chief Technology Officer at Touch International. He can be reached at 512/832-8292 or gbarrett@touchintl.com.* ***Ryomei Omote*** *is the General Manager of the Sensor Module Engineering, Industrial Materials and Input Device Business Unit at Nissha Printing. He can be contacted at +81-75-823-5271 or r-omote@nissha.co.jp.*

How Capacitive Sensing Works

Capacitive sensing is a very old technology. Mature readers may remember novel room lamps that could be turned on by touching a growing plant, and every reader has probably used capacitive elevator buttons at least once in his or her life. These primitive capacitive-sensing applications typically used a solid-state timer (such as an NE555 integrated circuit, first available in 1971) that "clicked" at a steady rate as determined by the time constant of an external resistor-capacitor (RC) network. A microcontroller was then programmed to monitor the clicks from the timer and when the rate increased or decreased, it would react. A wire (or piece of ivy, in the case of the novel lamp) was routed to a touch point and when a human touched it, additional body capacitance was added to the RC network which, in turn, altered the click rate and caused a touch to be detected (see Fig. 1). Now, over 30 years later, the same function is typically accomplished by using a simple capacitive switch IC.

Self-Capacitance

The type of pro-cap described above is called "self-capacitance" because it is based on measuring the capacitance of a single electrode with respect to ground. When a finger is near the electrode, the human-body capacitance changes the self-capacitance of the electrode.

In a self-capacitance touch screen, transparent conductors are patterned into spatially separated electrodes in either a single layer or two layers. When the electrodes are in a single layer, each electrode represents a different touch coordinate pair and is connected individually to a controller. When the electrodes are in two layers, they are usually arranged in a layer of rows and a layer of columns; the intersections of each row and column represent unique touch coordinate pairs. However, self-capacitance touch-screen controllers do not measure each intersection; they only measure each row and column; *i.e.*, each indi-

0362-0972/03/2010-016$1.00 + .00 © SID 2010

BOE-1034
BOE Tech. Grp. Co. v. Samsung Display Co.
Page 1 of 6
IPR2025-01481

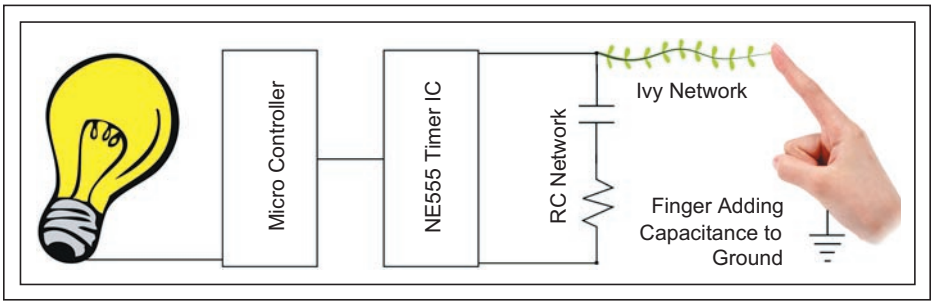

Fig. 1: Capacitive sensing is a very old technology. This schematic shows how a 1970s-era capacitive-sensing lamp could be turned on by touching a plant. It functioned by using body capacity to change the click rate of a timer. Source: Barrett and Omote.

vidual electrode. This works well when only a single finger is touching the screen. For example, in Fig. 2, a single-finger touching location X2,Y0 can be sensed accurately by measuring all the X electrodes and then all the Y electrodes in sequence.

Measuring individual electrodes rather than electrode intersections is the source of one of the major disadvantages of two-layer self-capacitance touch screens – the inability to unambiguously detect more than one touch. As shown in Fig. 2, two fingers touching in locations X2,Y0 and X1,Y3 produce four reported touch points. However, this disadvantage does not eliminate the use of two-finger gestures with a self-capacitance touch screen. The secret is in software – rather than using the ambiguous locations of the reported points, software can use the direction of movement of the points. In this situation it does not matter that four points resulted from two touches; as long as pairs are moving away from or toward each other (for example), a zoom gesture can be recognized.

Mutual Capacitance

The other more common type of pro-cap today is "mutual capacitance," which allows an unlimited number of unambiguous touches, produces higher resolution, is less sensitive to EMI, and can be more efficient in its use of sensor space. Mutual capacitance makes use of the fact that most conductive objects are able to hold a charge if they are very close together. If another conductive object, such as a finger, comes close to two conductive objects, the charge field (capacitance) between the two objects changes because the human-body capacitance "steals" some of the charge.

In a mutual-capacitance touch screen, transparent conductors are always patterned into spatially separated electrodes in two layers, usually arranged as rows and columns. Because the intersections of each row and column produce unique touch-coordinate pairs, the controller in a mutual-capacitance touch screen measures each intersection individually (see Fig. 3). This produces one of the major advantages of mutual-capacitance touch screens – the ability to sense a touch at every electrode intersection on the screen.

Because both self-capacitance and mutual-capacitance rely on the transfer of charge between human-body capacitance and either a single electrode or a pair of electrodes, this method of capacitive sensing is most commonly called "charge transfer." Table 1 compares the key characteristics of self-capacitance and mutual-capacitance as applied in touch screens.

Scanning

Pro-cap touch screens are "scanned," meaning that each individual electrode or electrode intersection is measured one-by-one in an endless cycle. Self-capacitance touch screens are scanned using a straightforward serial method because every electrode is connected individually to the controller. Mutual-capacitance touch screens, on the other hand, require a more-complex scanning mechanism that measures the capacitance at each row and column intersection. In this type of scan, often called "all points addressable," the controller drives a single column (Y) and then scans every row (X) that intersects with that column, measuring the capacitance value at each X-Y intersection. This process is repeated for every column and then the entire cycle starts over. This makes a mutual-capac-

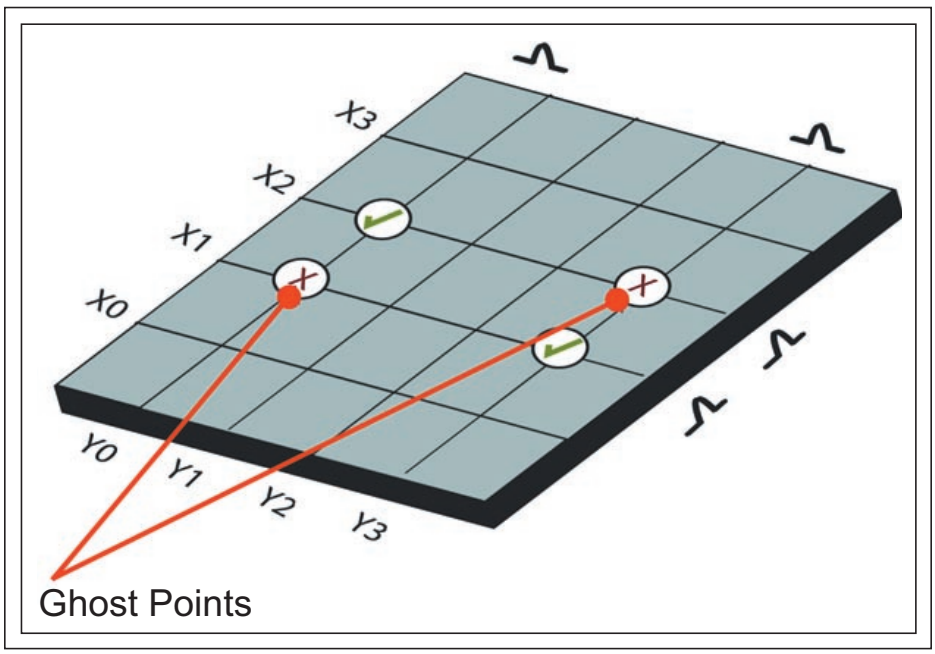

Fig. 2: When a self-capacitance touch screen is touched with two fingers that are diagonally separated, a pair of "ghost points" are created because the controller only knows that two columns and two rows have been touched; it cannot tell which coordinate pairs belong together because it is only scanning individual electrodes, not electrode intersections. Source: Barrett and Omote.

2637496x, 2010, 3, Downloaded from https://sid.onlinelibrary.wiley.com/doi/10.1002/j.2637-496X.2010.tb00229.x, Wiley Online Library on [29/08/2025]. See the Terms and Conditions (https://onlinelibrary.wiley.com/terms-and-conditions) on Wiley Online Library for rules of use; OA articles are governed by the applicable Creative Commons License

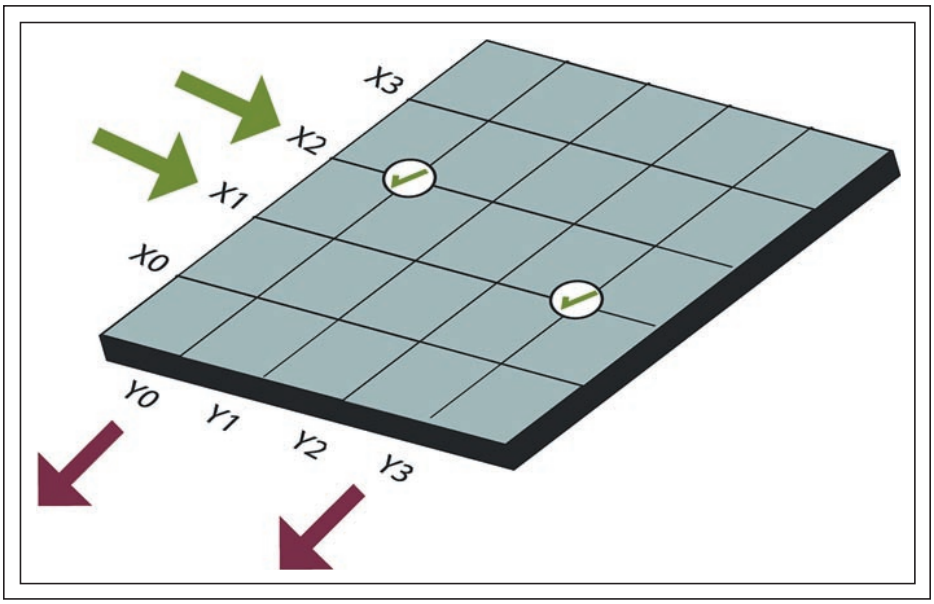

Fig. 3: In a mutual-capacitance touch screen, every electrode intersection can be unambiguously identified as a touch point. Source: Barrett and Omote.

itance controller relatively complex with a high processor load, but, in return, it supports unlimited multi-touch. Scanning rates in current pro-cap controllers range from approximately 20 to 200 Hz; a typical smartphone touch screen may have nine columns and 16 rows, for a total of 25 electrodes and 144 electrode intersections.

In both types of pro-cap touch screens, to determine an exact touch location, the values from multiple adjacent electrodes or electrode intersections are used to interpolate the exact touch coordinates. The results are extremely precise and the resolution is usually at least 1024×1024 (10 bits). Scanning also has the advantage of being free of coordinate drift. This is possible because the rows and columns are physically fixed and each measurement is made in a small area. Without the issue of coordinate drift, pro-cap touch screens do not have to be calibrated by the end-user as long as the touch screen is securely attached to the display.

Touch-Screen Construction

In the short time since the introduction of pro-cap touch screens in iPhones, a myriad of construction methods have been developed. All pro-cap touch-screen designs have two key features in common: (1) the sensing mechanism is underneath the touch surface and (2) there are no moving parts. The most common design incorporates the simple concept shown in Fig. 4.

Some of the newest products under development use a single-sided design, where all of the touch screen's layers are on one side of a single substrate. In this design, currently the thinnest possible for pro-cap, all of the layers are deposited by sputtering. There are innumerable variations on the basic design of the two-layer pro-cap shown in Fig. 4. For instance, micro-fine (10 µm) wires can be substituted for the sputtered ITO. Many mobile phones and most current signature-capture terminals use ITO on separate sheets of PET for each of the layers. Also common are touch screens that use one two-sided or two one-sided ITO-coated sheets of glass.

Touch-Screen Conductors

Patterning ITO on glass with line widths of 20 µm and resistivity of 150 Ω/□ is commonly accomplished using photolithographic methods; for example, using photoresist on an LCD fab. When the substrate is PET, line widths are typically 100–200 µm and patterning is accomplished using screen-printing, photolithography, or laser ablation. Research is in progress on fine-line patterning on PET with line widths of 30–50 µm. When used, the third unpatterned LCD shield layer typically has a resistivity of 150–300 Ω/□. Standard-width (not narrow-border) signal lines at the edge of the sensor are typically constructed of a molybdenum/aluminum/molybdenum combination.

Touch-Screen Conductor Patterns

ITO layers in pro-cap touch screens can be etched in several different patterns, all of which cost the same to manufacture, and it is difficult to say that one pattern out-performs another since touch-screen sensors and controller electronics are highly interrelated.

The pattern used in the original iPhone is one of the simplest, consisting of 10 columns of 1-mm-wide ITO spaced 5 mm apart on one side of a sheet of glass and 15 rows of 5-mm-high ITO with 37-µm deletions between them. The space between the 10 columns is filled with unconnected (floating) ITO in order to maintain uniform optical appearance. This design works well, but the geometry requires substantial processing power to generate accurate coordinates.

Table 1: A comparison of the key characteristics of self-capacitance and mutual-capacitance as applied in touch screens.

Characteristic	Self-Capacitance	Mutual Capacitance
Electrode types	Sensing only	Driving & sensing
Number of layers	1 or 2	2
Sensor design	Multi-pad or row & column	Any design with unique electrode intersections; usually row & column
Scanning method	Each electrode individually	Each electrode intersection
Measurement	Capacitance of electrode to ground	Capacitance between electrodes
Ghost points	No in multi-pad; Yes in row & column	No

2637496x, 2010, 3, Downloaded from https://sid.onlinelibrary.wiley.com/doi/10.1002/j.2637-496X.2010.tb00229.x, Wiley Online Library on [29/08/2025]. See the Terms and Conditions (https://onlinelibrary.wiley.com/terms-and-conditions) on Wiley Online Library for rules of use; OA articles are governed by the applicable Creative Commons License

The most common pattern is an interlocking diamond that consists of squares on a 45º axis, connected at two corners via a small bridge. This pattern is typically applied in two layers – one layer of horizontal diamond rows and one layer of vertical diamond columns (see Fig. 5). Each layer adheres to one side of two pieces of glass or PET, which are then combined, interlocking the diamond rows and columns. The diamond size varies by manufacturer but is in the range of 4–8 mm; almost all pro-cap controllers work with the diamond pattern.

Border Area

One of the most important cost drivers in pro-cap touch-screen design is the border area. Unlike conventional analog-resistive touch screens, which have only four or five signal lines, pro-cap touch screens often have 40 or more connections because each row and column must be connected to the controller (or to an intermediate capacitive-to-digital signal-processing chip). This can require a significant border area around the touch-screen active area. Historically, connection traces have been silk-screen printed 1 mm wide with a 1-mm gap using silver inks.

The latest mobile phones always require a narrow border. To achieve this, a technique similar to that utilized for TFT-LCDs is used. This technique requires the touch screen to be sputtered and etched to add multiple layers of thin films in the border area, which adds cost. Fine-line silver printing with 50–100-µm lines and gaps achieves a lower cost than the sputtering technique, but polyimide tails remain the most common method of attaching to the lines, which requires the material to protrude beyond the edge of the substrate and is also expensive.

Cost can be reduced substantially if a device does not require flush mounting and can allow for a larger border area under the bezel.

Cover Lens and Touch Surface

Mobile-phone touch screens typically use a plastic or glass "cover lens" that is laminated to the touch screen. This allows product designers to make the touch screen flush with the top surface of the device housing (as in the iPhone). The cover lens can be screen-printed on the rear surface, in-mold decorated (IMD), or, more commonly, a decorated film can be laminated to the rear surface. The decoration hides the touch-panel circuitry, incorporates a logo, can have ruby coatings for a camera, and can act as a diffuser for backlights. A glass cover lens is typically 0.55, 0.75, or 1.1 mm thick for mobile devices and up to 3 mm thick for kiosk applications. The dielectric constant of the cover lens and its thickness have a direct bearing on the sensitivity of the pro-cap touch screen – a thinner cover lens and/or a higher dielectric constant results in better performance. Plastic (PMMA) can be used in place of glass; however, it has a lower dielectric constant and must be half the thickness of glass to achieve the same performance.

When glass is used for the cover lens, some designers choose to chemically strengthen it to reduce the chance of breaking. Float glass (soda-lime) or aluminum silicate are the most commonly used types of glass. Chemically strengthened float glass is half as likely to break as plain float glass; chemically strengthened aluminum silicate is less than one-third as likely to break. Some cover-lens designs have become extremely complex with multiple holes and slots, rounded corners, and even bent edges. All of these processes must be performed before the glass is chemically strengthened.

Curved Substrates

As the industrial design of consumer products has become a bigger factor in the purchasing decision, curved substrates have become very important. Pro-cap is one of the few touch technologies that allows the sensor to be curved. Two-dimensional surfaces are straightforward to produce by sputtering ITO on polycarbonate or some other film and then

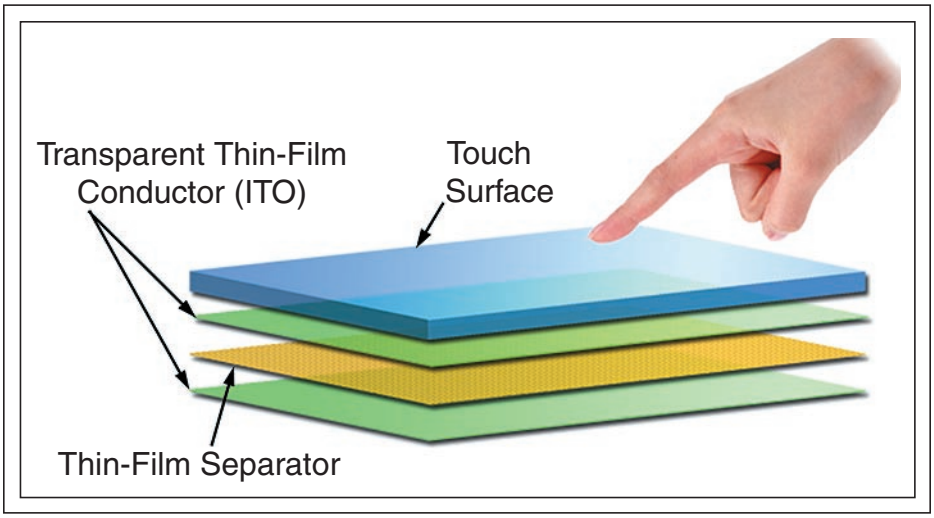

Fig. 4: The pro-cap design concept shows two transparent conductor layers separated by an insulator, all under the touch surface. (Note that the transparent conductors are shown as solid sheets when in fact they are actually patterned.) In some cases, an additional unpatterned ITO layer is added at the bottom of the stack as a shield for LCD noise. Source: Barrett and Omote.

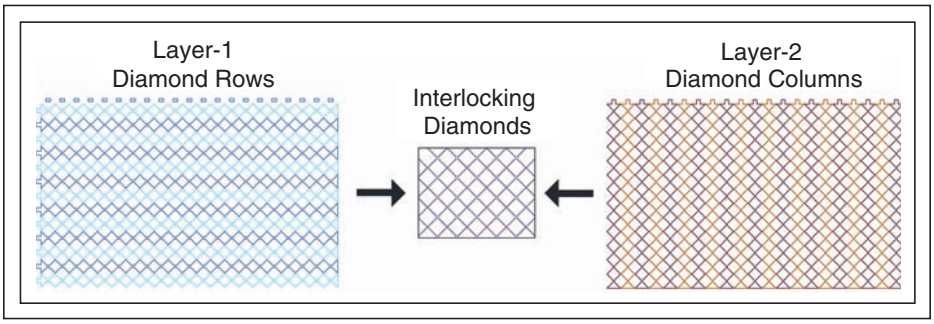

Fig. 5: The diamond pro-cap sensor pattern is formed by two interlocking diamond-shaped layers. Source: Barrett and Omote.

2637496x, 2010, 3, Downloaded from https://sid.onlinelibrary.wiley.com/doi/10.1002/j.2637-496X.2010.tb00229.x, Wiley Online Library on [29/08/2025]. See the Terms and Conditions (https://onlinelibrary.wiley.com/terms-and-conditions) on Wiley Online Library for rules of use; OA articles are governed by the applicable Creative Commons License

putting the film into the cover-lens mold. Three-dimensional (3-D) surfaces are more challenging; one solution under development uses a molded or flexible substrate and elastic conductive material such as PEDOT.

Controller Designs

There are approximately 17 vendors selling pro-cap controllers today, several of whom offer both self-capacitance (one or two touches) and mutual-capacitance (unlimited multi-touch) types. Mutual capacitance is fast becoming the standard because of the strong market momentum toward multi-touch driven by the Apple iPhone and Windows 7. Available pro-cap controllers range from dedicated controllers that are specific to a particular sensor size and row-column configuration, to fully programmable microcontrollers with advanced built-in gesture-recognition capabilities. Current controllers are limited to a maximum sensor size of around 10 in. at best; however, most controllers can be combined to support larger sensors. At least one controller supplier has announced that it is developing single-chip controllers that can support sensors up to 17 in. Figure 6 illustrates a typical controller implementation in a mobile phone.

Historically, pro-cap has always been finger-touch only; it has supported only electrically tethered pens (which are highly desirable on signature-capture terminals!). This has been a relatively significant shortcoming of the technology, particularly with mobile phones in Asia, where users often write Kanji characters on their resistive-touch-screen-equipped phones. In 2009, Atmel announced its pro-cap controller's ability to respond to a conductive stylus; this resulted from the 3× increase in signal-to-noise (S/N) ratio it was able to achieve (from 25:1 to 80:1). The limitation is that the stylus tip diameter must be 2–3 mm, which is considerably larger than the typical 0.8-mm PDA/smartphone stylus-tip diameter. The market acceptance of this stylus size is still to be determined.

Another attribute of pro-cap technology is that the touch screen does not actually have to be touched to be activated. The touch screen's level of sensitivity can be controlled by the electronics. In most cases, software is designed to require a physical touch to activate a function. However, the sensitivity can be increased so that the simple placement of a hand near the touch screen (in the Z-axis) can be detected. This is commonly called "proximity sensing."

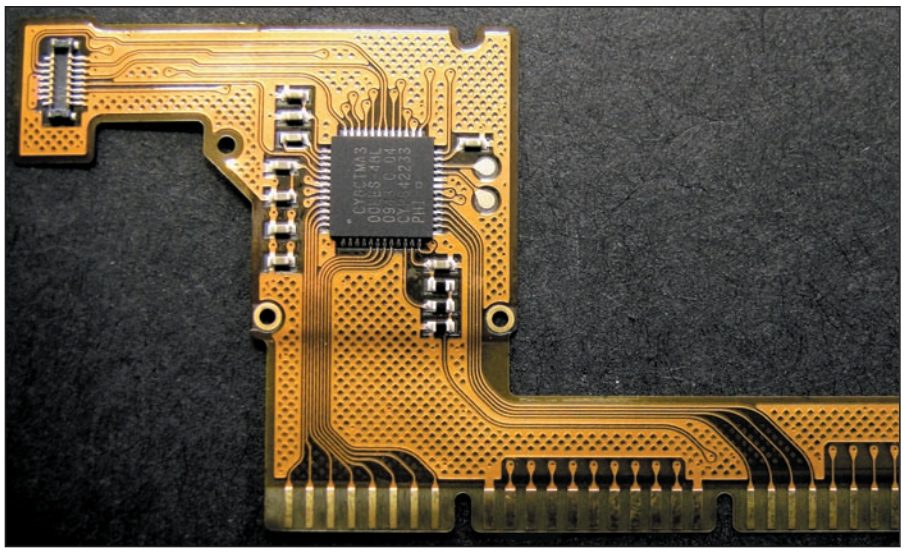

Fig. 6: Most pro-cap controller implementations are on the touch-screen tail, located close to the sensor to minimize noise pickup. This photo shows an example of a touch-screen tail from a mobile phone. The controller is a PSoC chip from Cypress Semiconductor. The 25 pins along the lower edge of the tail connect to the sensor (nine columns plus two grounds in the middle; 16 rows split into two groups of eight on the left and right). The connector in the upper-left corner of the tail connects to the phone's main board. Source: Nissha Printing.

The selection of a controller vendor typically depends on two factors – performance specifications and the maturity and sophistication of the customer. Some vendors are more oriented toward proposing a total solution for inexperienced customers (device OEMs), which naturally results in less flexibility. Some controller vendors work mainly with sensor manufacturers, who, in turn, work with the device OEMs. Other controller vendors work mainly directly with the device OEMs. The most important controller performance specifications include power consumption, scan speed, maximum number of touches, capacitance-measurement sensitivity, and chip size. The standard hardware interface for mobile-phone controllers is I^2C; the standard interface for PC controllers is USB.

Controller Firmware

Controller firmware (especially algorithms) is evolving very rapidly in the pro-cap touch-screen industry, much faster than sensor or controller hardware.

Conventionally, touch controllers have generated only one X-Y coordinate pair. With pro-cap, controllers must now be capable of generating at least two pairs and often up to 10 or more pairs. In small-to-medium (<10-in.) devices, the output format of the coordinate data varies depending on the controller supplier. In large-area (>10-in.) devices, Windows 7 has now established a coordinate data-format standard to which most controllers capable of supporting large-area screens are expected to adhere. Microsoft has also established a standard (part of the Windows 7 Touch Logo specification) on the minimum number of points per second per touch (50) that a multi-touch controller must deliver.

Number of Touches

How many touches are enough? On one hand, some industry participants believe that two touches on a mobile phone are enough; tablets and netbooks/notebooks used in gaming may require four touches and PCs with 15-in. or larger screens may require 10 touches. Windows 7 supports up to 100 touches. The reality is that today, other than multi-player games, there are very few applications that make use of more than two touches. Other than observing that all humans have 10 fingers, nobody seems to have any clear concept of how real-world applications will use that many touches.

2637496x, 2010, 3, Downloaded from https://sid.onlinelibrary.wiley.com/doi/10.1002/j.2637-496X.2010.tb00229.x, Wiley Online Library on [29/08/2025]. See the Terms and Conditions (https://onlinelibrary.wiley.com/terms-and-conditions) on Wiley Online Library for rules of use; OA articles are governed by the applicable Creative Commons License

On the other hand, it is clear that as the border width gets ever smaller on mobile devices, touch screens must reject the unwanted touches caused by fingers holding the device (*i.e.*, "grip suppression"). Apple's patent application on the iPhone pro-cap touch screen[1] says that the controller is designed to support up to 15 touches for this purpose, consisting of "10 fingers, 2 palms, and 3 others." Related to this, many controllers are capable of sending a message indicating when a large number of locations are being activated at the same time. On mobile phones, this attribute is often used to determine that the phone is next to the face or the device has been put away in a pocket, signaling that all touches should be ignored.

Business Model

There are at least 36 suppliers in the pro-cap touch-screen industry today. Table 2 below lists some of the leading suppliers. Relatively few of them are currently capable of supplying modules (integrated sensor and controller assemblies); some examples include Cypress, ELAN, Melfas, N-trig, Nissha, Synaptics, Wacom, and Zytronic. The remainder of the 36 is split more or less evenly between sensor and controller suppliers. Some of these have ambitions to become module suppliers because (theoretically) it is easier for module makers to support their complete product, and the margin is higher. However, becoming a module supplier can be challenging. It requires a high level of expertise in EMI engineering, the ability to modify the firmware of any controller used in the module (in order to achieve uniformity of input across controllers), knowledge of and ability to support any OS with which the module is used, and module manufacturing expertise. Figure 7 shows some representative modules manufactured by Nissha Printing.

Table 2: Each of the leading suppliers in the pro-cap touch-screen industry listed below has shipped more than 1 million units.

Sensors	Controllers	Modules
Cando	Atmel	N-trig
DigiTech Systems	Broadcom	Nissha Printing
EELY	Cirque	Synaptics
Innolux	Cypress	Wacom
JTouch	EETI	Zytronic
Nanjing Wally	ELAN	
Nissha Printing	Melfas	
Touch International	Pixcir	
TPK Solutions	Synaptics	
Wintek		
Young Fast Optoelectronics		

Fig. 7: Smartphone pro-cap touch-screen modules manufactured by Nissha Printing consist of a pro-cap sensor, a decorated cover lens laminated to the sensor and a controller mounted on the FPC (flexible printed circuit) that makes up the touch-screen connector tail. Source: Nissha Printing.

Device OEMs today want more module suppliers because that makes their job easier. But this may be the case only for a few years. If pro-cap touch becomes as popular as analog-resistive touch, then the device OEMs will probably want to buy the controller with software themselves and buy the sensor separately. In other words, the market may evolve into a more standardized commodity market. This is of course worrisome to potential module suppliers.

Summary

In the last 3 years, pro-cap has grown extremely rapidly to become the number-two touch technology. Pro-cap is used in two forms, self-capacitance and mutual-capacitance; only the latter supports unlimited multitouch. Many different construction methods are used, the most common one today is multiple sputtered layers on one side of a substrate. The most common pattern used for the sensor's transparent conductors is an interlocking diamond. Achieving narrow borders contributes substantially to the cost of a pro-cap touch screen. The design of a plastic or glass cover lens has become an important part of pro-cap touch screens used in mobile devices. Pro-cap controller hardware and firmware are evolving rapidly; the latest generation supports the use of a conductive stylus with a 2–3-mm tip. While very few applications today make use of more than two touches, mobile devices can make use of additional touches in providing "grip suppression." Some current pro-cap sensor and controller suppliers would like to become module suppliers, but doing so requires a significant investment in additional expertise.

References

[1]United State Patent Application 2006/0097991. ■

2637496x, 2010, 3, Downloaded from https://sid.onlinelibrary.wiley.com/doi/10.1002/j.2637-496X.2010.tb00229.x, Wiley Online Library on [29/08/2025]. See the Terms and Conditions (https://onlinelibrary.wiley.com/terms-and-conditions) on Wiley Online Library for rules of use; OA articles are governed by the applicable Creative Commons License