US 20090244021A1

(19) United States

(12) Patent Application Publication

(10) Pub. No.: US 2009/0244021 A1

(43) Pub. Date: Oct. 1, 2009

MATSUO et al.

(54) ELECTRICAL CAPACITANCE INPUT DEVICE, DISPLAY APPARATUS WITH INPUT FUNCTION AND ELECTRONIC APPARATUS

(75) Inventors: **Mutsumi MATSUO**, Azumino (JP); **Yasuhiro KOBAYASHI**, Azumino (JP)

Correspondence Address:
HARNESS, DICKEY & PIERCE, P.L.C.
P.O. BOX 828
BLOOMFIELD HILLS, MI 48303 (US)

(73) Assignee: **EPSON IMAGING DEVICES CORPORATION**, Azumino-shi (JP)

(21) Appl. No.: **12/391,322**

(22) Filed: **Feb. 24, 2009**

(30) **Foreign Application Priority Data**

Mar. 26, 2008 (JP) 2008-079906

Publication Classification

(51) **Int. Cl.**
G06F 3/041 (2006.01)
G06F 3/044 (2006.01)

(52) **U.S. Cl.** **345/173**; 178/18.06

(57) **ABSTRACT**

An electrostatic capacitance input device having a plurality of first electrodes extending in a first direction and a plurality of second electrodes extending in a second direction intersecting the first direction in an input area, including a plurality of first lines extending in parallel to each other from the plurality of first electrodes to a plurality of first terminals, and a plurality of second lines extending in parallel to each other from the plurality of second electrode to a plurality of second terminals, the first lines and the second lines being formed outside the input area, and an auxiliary line extending outside at least one of the lines at both ends in terms of the direction of arrangement of one or both of the plurality of first lines and the plurality of second lines, the auxiliary line generating a parasitic capacitance with respect to the at least one of the lines.

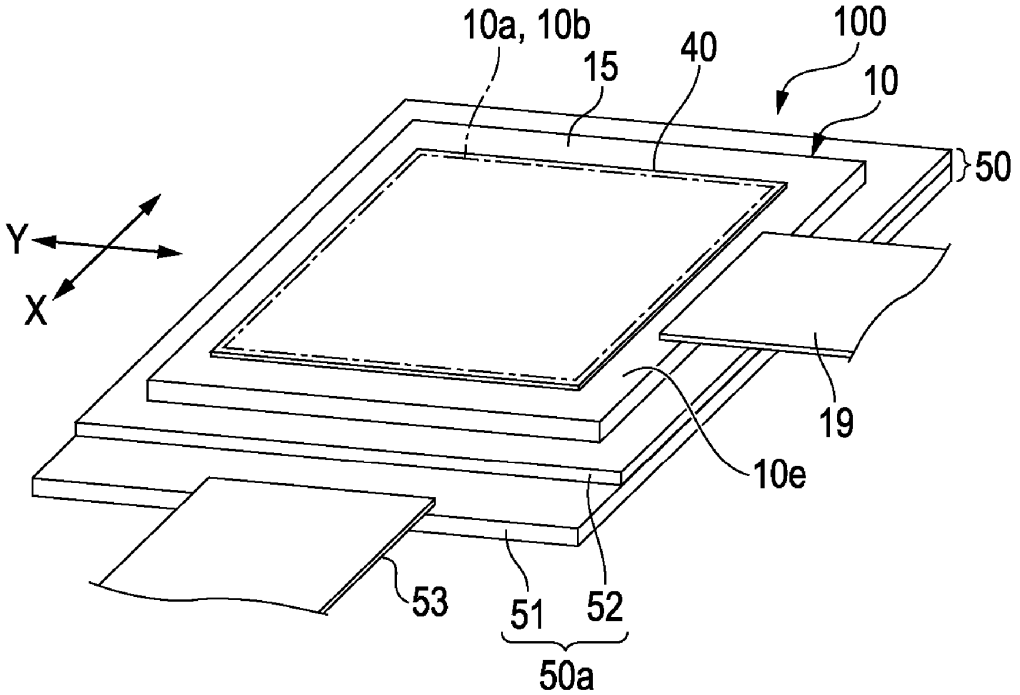

FIG. 1

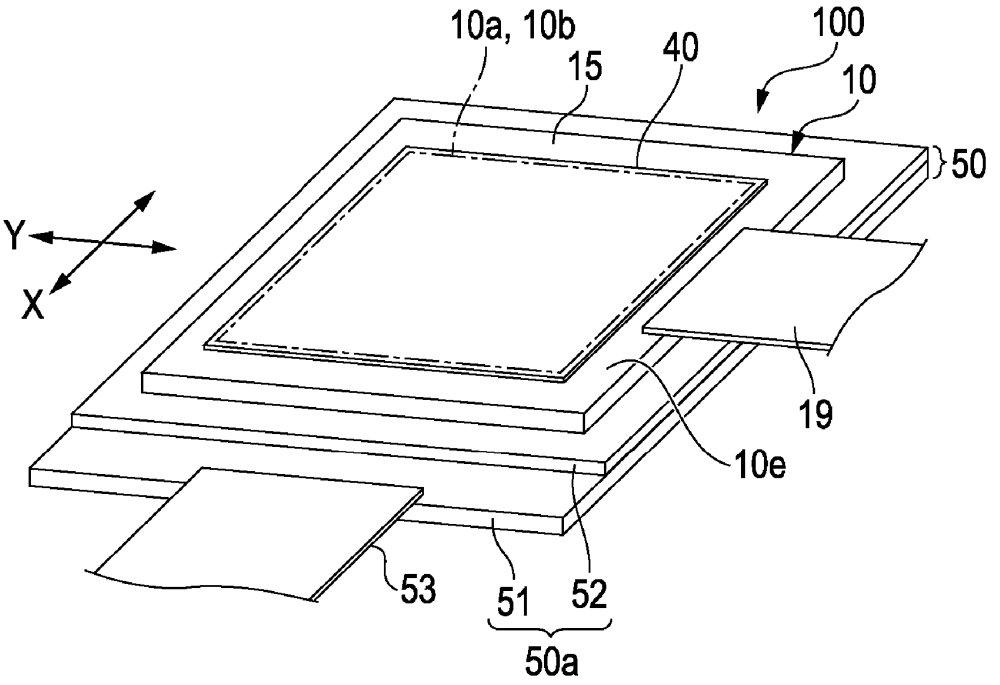

FIG. 2

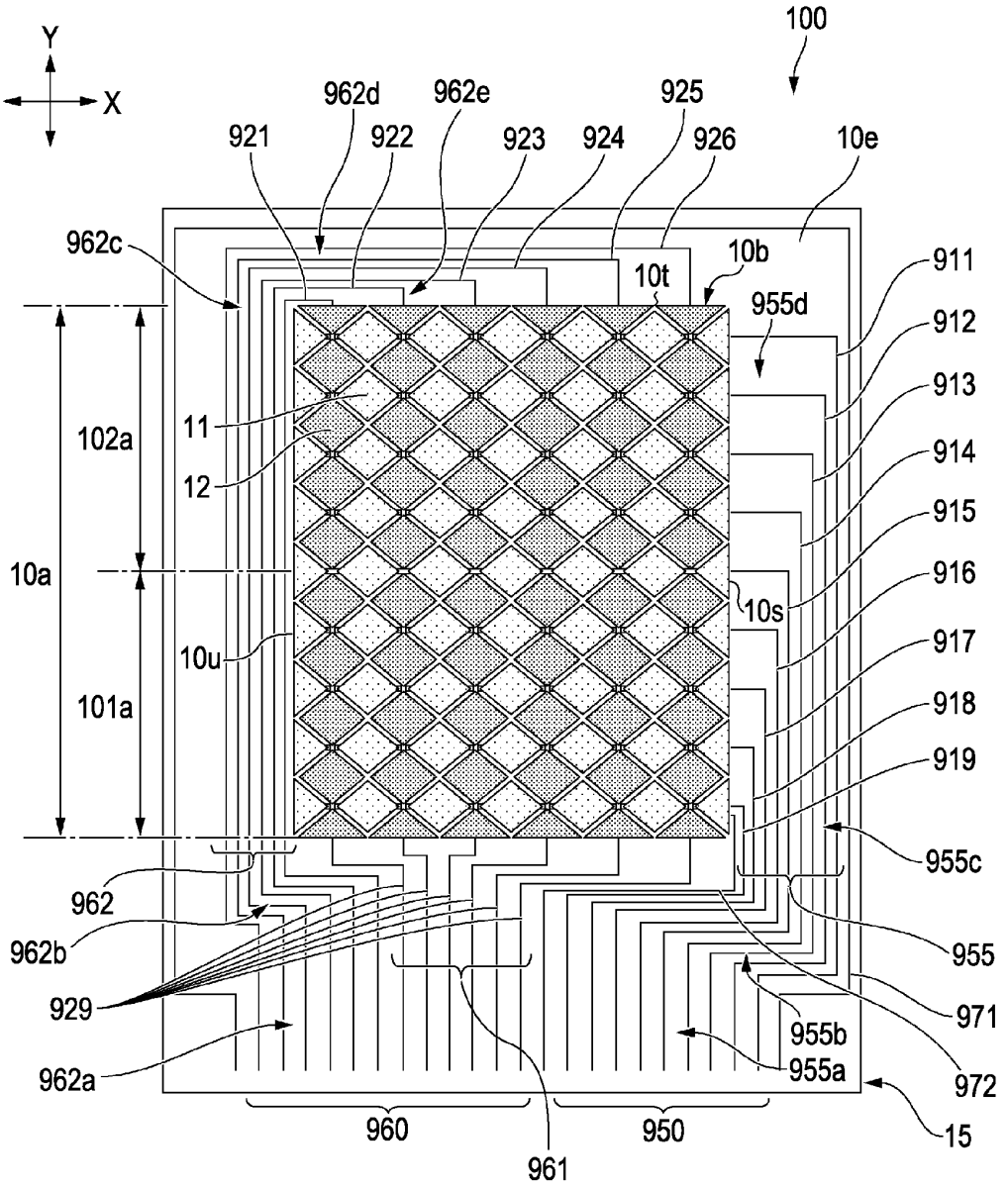
100
Y
X
962d
962e
925
921
922
923
924
926
10e
962c
10b
10t
911
955d
912
913
11
102a
12
914
915
10a
916
10s
917
10u
101a
918
919
955c
962
962b
955
929
971
955b
962a
955a
972
960
950
15
961

FIG. 3A

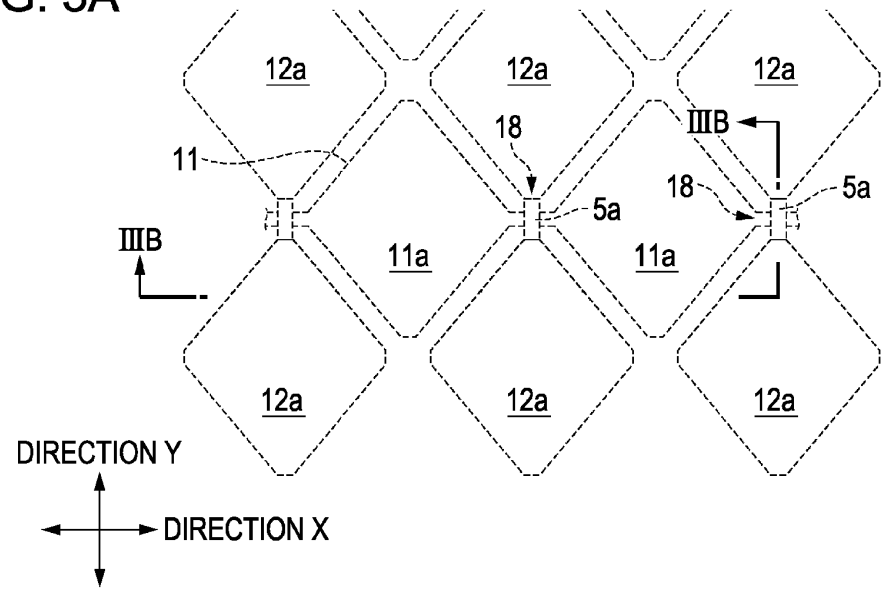

FIG. 3B

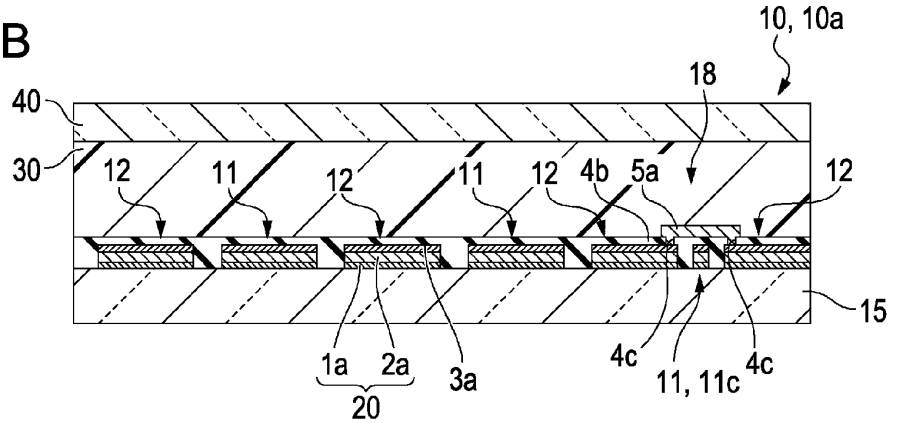

FIG. 3C

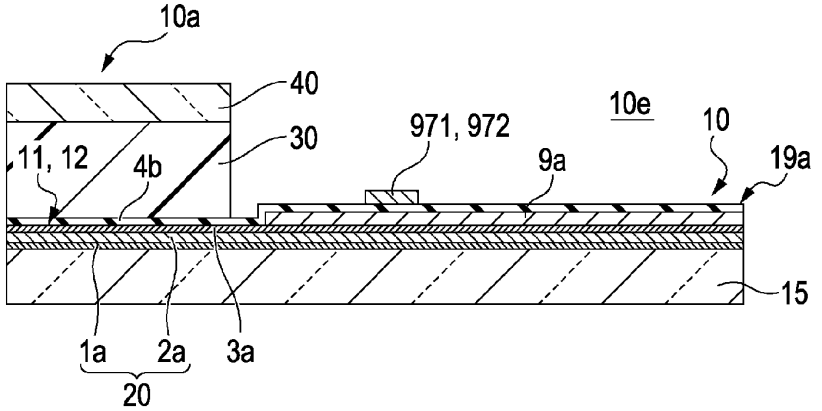

FIG. 4

COLUMN 1	COLUMN 2		COLUMN 3	COLUM 4	COLUMN 5	COLUMN 6	COLUMN 7
LINE	PORTION		LENGTH μm	WIDTH μm	DISTANCE μm	PARASITIC CAPACITANCE PF	DISTRIBUTION Ω
971	955	a	2042.0	300	200		304
		b	15660.0	65	55		
		c	77017.5	65	55		
		d	770.0	7037	543		
						(0.96)	
911	955	a	2137.5	300	200	4.88	375
		b	16072.5	65	55		
		c	69342.5	65	55		
		d	682.5	7037	543		
						(0.92)	
912	955	a	2232.0	300	200	4.87	389
		b	16940.0	60	45		
		c	61668.0	60	45		
		d	600.0	7037	543		
						(0.95)	
913	955	a	2325.5	300	200	4.96	399
		b	16912.5	55	35		
		c	53994.5	55	35		
		d	522.5	7037	543		
						(1.01)	
914	955	a	2418.0	300	200	4.96	418
		b	17340.0	50	30		
		c	46322.0	50	30		
		d	450.0	7037	543		
						(0.95)	
915	955	a	2509.0	300	200	4.86	443
		b	17772.5	45	25		
		c	38651.0	45	25		
		d	382.5	7037	543		
						(0.90)	
916	955	a	2597.5	300	200	4.83	482
		b	18210.0	40	20		
		c	30982.5	40	20		
		d	320.0	7037	543		
						(0.93)	
917	955	a	2682.0	300	200	4.91	410
		b	18652.5	40	15		
		c	23317.5	40	15		
		d	262.5	7037	543		
						(0.98)	
918	955	a	2762.5	300	200	5.04	450
		b	19100.0	35	10		
		c	15657.5	35	10		
		d	210.0	7037	543		
						(1.05)	
919	955	a	2835.0	300	200	4.82	531
		b	19552.5	30	15		
		c	8005.0	30	15		
		d	162.5	7037	543		
						(0.77)	
972	955	a	2892.5	300	200		531
		b	20010.0	30	15		
		c	364.0	30	15		
		d	205.0	7037	543		

FIG. 5

COLUMN 1	COLUMN 2		COLUMN 3	COLUMN 4	COLUMN 5	COLUMN 6	COLUMN 7
LINE	PORTION		LENGTH μm	WIDTH μm	DISTANCE μm	PARASITIC CAPACITANCE PF	DISTRIBUTION Ω
911	955	a	2137.5	300	200	8.33	307
		b	16072.5	75	20		
		c	68342.5	75	10		
		d	682.5	7037	543		
						(5.33)	
912	955	a	2232.0	300	200	12.87	306
		b	16940.0	74	20		
		c	60768.0	70	10		
		d	600.0	7037	543		
						(4.54)	
913	955	a	2325.5	300	200	11.31	299
		b	16912.5	73	20		
		c	52994.5	65	10		
		d	522.5	7037	543		
						(3.77)	
914	955	a	2418.0	300	200	9.86	293
		b	17340.0	72	20		
		c	45322.0	60	10		
		d	450.0	7037	543		
						(3.09)	
915	955	a	2509.0	300	200	8.58	286
		b	17772.5	70	20		
		c	37651.0	55	10		
		d	382.5	7037	543		
						(2.48)	
916	955	a	2597.5	300	200	7.42	277
		b	18210.0	67	20		
		c	29982.5	50	10		
		d	320.0	7037	543		
						(1.94)	
917	955	a	2682.0	300	200	6.38	265
		b	18652.5	63	20		
		c	22317.5	45	10		
		d	262.5	7037	543		
						(1.45)	
918	955	a	2762.5	300	200	5.46	250
		b	19100.0	57	20		
		c	14657.5	40	10		
		d	210.0	7037	543		
						(1.01)	
919	955	a	2835.0	300	200	4.01	233
		b	19552.5	48	20		
		c	7005.0	35	10		
		d	162.5	7037	543		

FIG. 6

COLUMN 1	COLUMN 2		COLUMN 3	COLUMN 4	COLUMN 5	COLUMN 6	COLUMN 7
LINE	PORTION		LENGTH μm	WIDTH μm	DISTANCE μm	PARASITIC CAPACITANCE PF	DISTRIBUTION Ω
921	962	a	2660.0	300	200	4.68	418
		b	18550.0	65	35	*1.61	
		c	71940.0	65	35		
		d	3600.0	65	35		
		e	330.0	6445	435		
						(1.68)	
922	962	a	2579.0	300	200	6.31	448
		b	18131.0	65	40		
		c	72102.0	65	40		
		d	10561.0	65	40		
		e	411.0	6445	435		
						(1.63)	
923	962	a	2496.0	300	200	6.24	430
		b	17714.0	70	45		
		c	72268.0	70	45		
		d	17524.0	70	45		
		e	494.0	6445	435		
						(1.61)	
924	962	a	2411.0	300	200	6.14	457
		b	17299.0	70	50		
		c	72438.0	70	50		
		d	24489.0	70	50		
		e	579.0	6445	435		
						(1.54)	
925	962	a	2324.0	300	200	6.16	484
		b	16886.0	70	50		
		c	72612.0	70	50		
		d	31456.0	70	50		
		e	666.0	6445	435		
						(1.63)	
926	962	a	2235.0	300	200	6.22	511
		b	16475.0	70	50		
		c	72790.0	70	50		
		d	38425.0	70	50		
		e	755.0	6445	435		
						(1.59)	
971	962	a	2143.0	300	200		638
		b	16066.0	60	40		
		c	72972.0	60	40		
		d	45396.0	60	40		
		e	847.0	6445	435		

FIG. 7

COLUMN 1	COLUMN 2		COLUMN 3	COLUMN 4	COLUMN 5	COLUMN 6	COLUMN 7
LINE	PORTION		LENGTH μm	WIDTH μm	DISTANCE μm	PARASITIC CAPACITANCE PF	DISTRIBUTION Ω
921	962	a	2660.0	300	200	9.41	376
		b	18550.0	70	10		
		c	71940.0	70	10		
		d	3600.0	70	10		
		e	330.0	6445	435		
						(6.41)	
922	962	a	2579.0	300	200	16.46	388
		b	18131.0	72	10		
		c	72102.0	72	10		
		d	10561.0	72	10		
		e	411.0	6445	435		
						(7.05)	
923	962	a	2496.0	300	200	17.75	403
		b	17714.0	74	10		
		c	72268.0	74	10		
		d	17524.0	70	10		
		e	494.0	6445	435		
						(7.71)	
924	962	a	2411.0	300	200	19.15	408
		b	17299.0	76	10		
		c	72438.0	76	10		
		d	24489.0	76	10		
		e	579.0	6445	435		
						(8.45)	
925	962	a	2324.0	300	200	20.62	417
		b	16886.0	78	10		
		c	72612.0	78	10		
		d	31456.0	78	10		
		e	666.0	6445	435		
						(9.18)	
926	962	a	2235.0	300	200	12.18	426
		b	16475.0	80	10		
		c	72790.0	80	10		
		d	38425.0	80	10		
		e	755.0	6445	435		

FIG. 8A

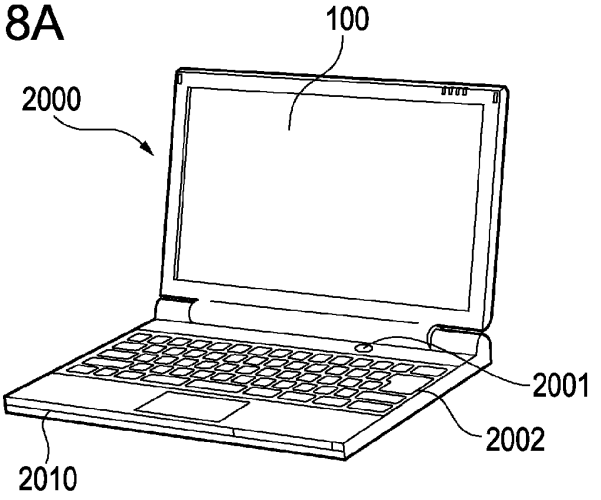

FIG. 8B

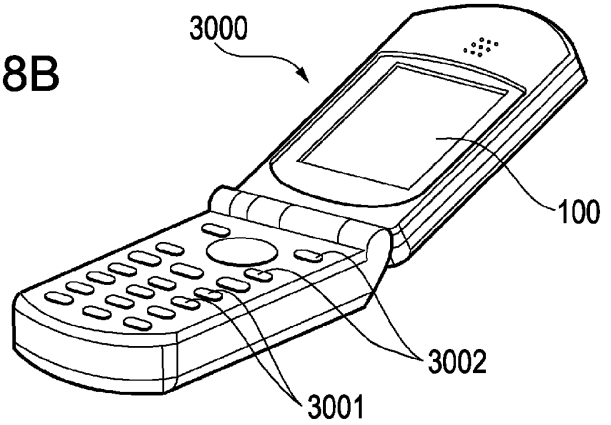

FIG. 8C

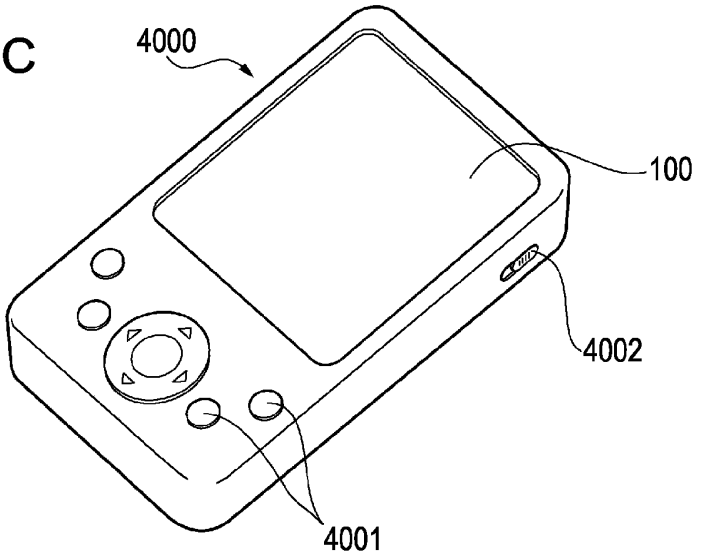

FIG. 9

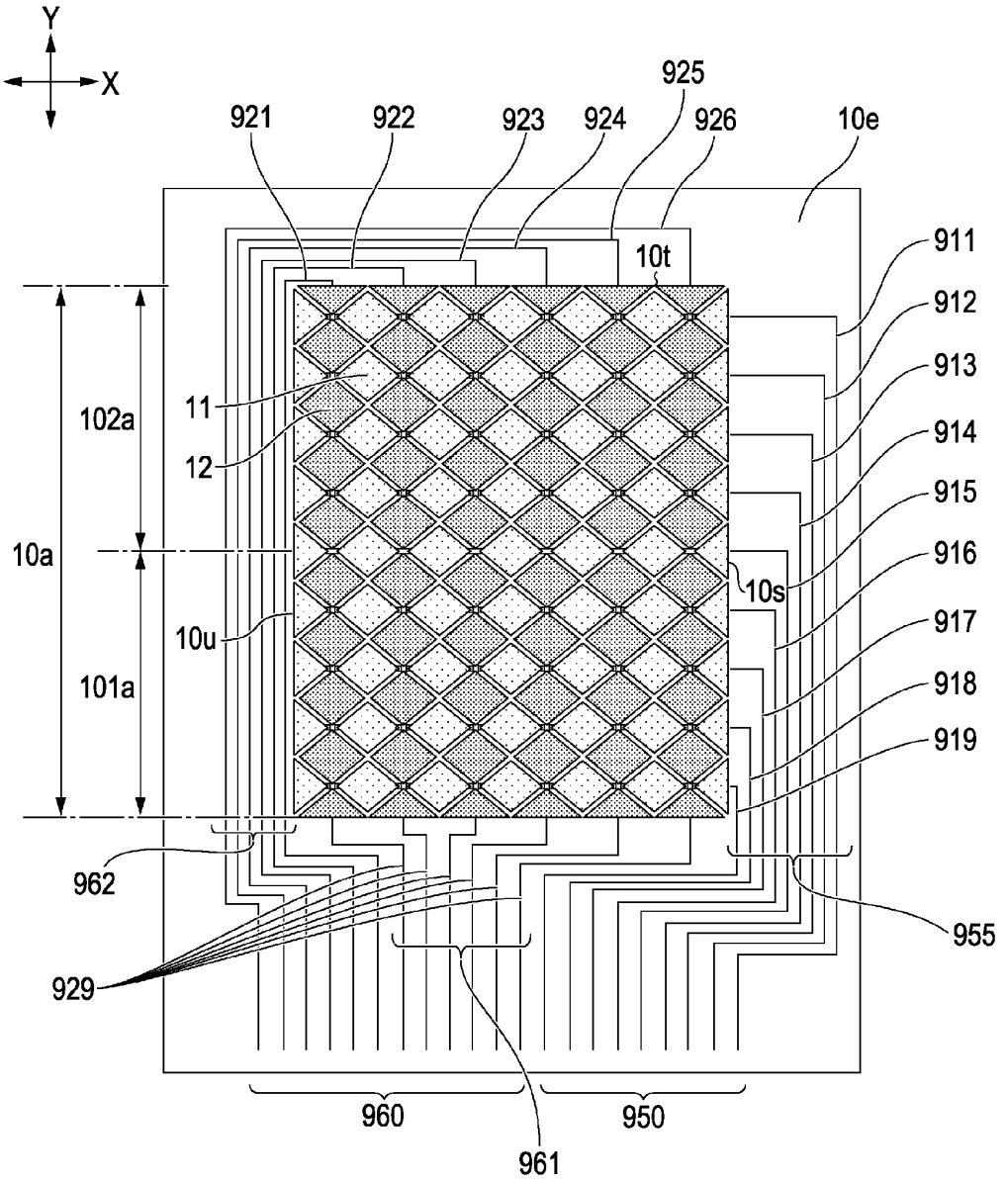
Y
X
921
922
923
924
925
926
10e
10t
911
912
913
914
915
916
917
918
919
102a
11
12
10a
10s
10u
101a
962
955
929
960
950
961

ELECTRICAL CAPACITANCE INPUT DEVICE, DISPLAY APPARATUS WITH INPUT FUNCTION AND ELECTRONIC APPARATUS

[0001] The entire disclosure of Japanese Patent Application No. 2008-079906, filed Mar. 26, 2008 is expressly incorporated by reference herein.

BACKGROUND

[0002] 1. Technical Field

[0003] The present invention relates to an electrostatic capacitance input device which is able to detect a position where a finger comes into contact with as a change in electrostatic capacitance, a display apparatus with an input function, and an electronic apparatus.

[0004] 2. Related Art

[0005] In recent years, some of electronic apparatuses such as mobile phone sets, car navigation systems, personal computers, ticket-vending machines, and bank terminals include an input device of a tablet type arranged on a surface of a liquid crystal device or the like thereof, whereby input of data corresponding to instruction images displayed in an image display area of the liquid crystal device is achieved by referring to the instruction images and touching areas where the instruction images are displayed with a finger or the like.

[0006] Such the input devices (touch panels) include a resistance film type and an electrostatic capacitance type, and the input device of the resistance film type has a double structure including film and glass and is configured to press the film to short-circuit, so that disadvantages such as the narrowness of the range of the operating temperature or weakness for the change with time are resulted.

[0007] In contrast, the electrostatic capacitance input device has an advantage such that a translucent conductive film may simply be formed on a single substrate. In the electrostatic capacitance input device, for example, electrode patterns are extended in the directions intersecting with respect to teach other and an input position is detected by sensing the change of the electrostatic capacitance between electrodes when the finger or the like comes into contact therewith or in proximity thereto (for example, JP-A-2005-337773).

[0008] In the electrostatic capacitance input device as described above, for example, as shown in FIG. **9**, a plurality of first translucent electrode patterns **11** extending in a direction X and a plurality of second translucent electrode patterns **12** extending in a direction Y, where the direction X and the direction Y are directions intersecting with respect to each other in the direction of the plane of a substrate, are formed in an input area **10***a* of the substrate, and a first distribution area **955** having a plurality of first lines **911** to **919** extending from the plurality of first translucent electrode patterns **11** to a first signal input/output area **950** so as to be arranged in parallel to each other and a second distribution area (a short distance second distribution area **961** and a long distance second distribution area **962**) having a plurality of second lines **921** to **926** and **929** extending from the plurality of second translucent electrode patterns **12** to a second signal input/output area **960** so as to arranged in parallel to each other are formed in a peripheral area **10***e* outside the input area **10***a* on the substrate. The configuration shown in FIG. **9** is thought out by the present inventor for comparing with the invention of this application, and hence is not a related art.

[0009] Since the change in the electrostatic capacitance in the electrostatic capacitance input device, if the capacitances which are parasitic on the lines are varied from line-to-line, such variations cannot be absorbed by the correction in a detection circuit and hence the sensitivity of detection is disadvantageously and significantly lowered. In the configuration shown in FIG. **9**, the capacitances which are parasitic on the lines vary from line-to-line from the reason described below.

[0010] As shown in FIG. **9**, when the first signal input/output area **950** is arranged on one side of the input area **10***a* in terms of the direction Y, the first distribution area **955** extends from an end side **10***s* on one side of the input area **10***a* in terms of the direction X to the first signal input/output area **950** along the end side **10***s*. When the input area **10***a* is divided into a first input area **101***a* located on the side of the second signal input/output area **960** in terms of the direction Y and a second input area **102***a* located on the side opposite from the side of the second signal input/output area **960** in terms of the direction Y so as to enable detection of multipoint instruction although the second signal input/output area **960** is arranged on one side of the input area **10***a* in terms of the direction Y, the plurality of second lines **921** to **926** to be connected to the second translucent electrode patterns **12** in the second input area **102***a* extend from an end side **10***t* located on the opposite side of the input area **10***a* from the second signal input/output area **960** to the second signal input/output area **960** along one end side **10***u* of the input area **10***a* in terms of the direction X.

[0011] In such a case, since the lengths of the lines are significantly different among the plurality of first lines **911** to **919**, the capacitances which are parasitic between the adjacent lines disadvantageously and significantly different among the first lines **911** to **919** from line-to-line. Also, since the lengths of the lines are significantly different among the plurality of second lines **921** to **926** extending from the second input area **102***a*, the capacitances which are parasitic between the adjacent lines disadvantageously and significantly different among the second lines **921** to **926** from line-to-line.

SUMMARY

[0012] An advantage of some aspects of the invention is to provide an electrostatic capacitance input device, a display apparatus with an input function, and an electronic apparatus in which improvement of detection sensitivity is achieved by compressing line-to-line variations of capacitance which is parasitic on lines when detecting an instructed position by the change in electrostatic capacitance.

[0013] According to a first aspect of the invention, there is provided an electrostatic capacitance input device including a plurality of first electrodes extending in a first direction and a plurality of second electrodes extending in a second direction intersecting the first direction in an input area, including a plurality of first lines extending in parallel to each other from the plurality of first electrodes to a plurality of first terminals, and a plurality of second lines extending in parallel to each other from the plurality of second electrode to a plurality of second terminals, the first lines and the second lines being formed outside the input area, and an auxiliary line extending outside at least one of the lines at both ends in terms of the direction of arrangement of one or both of the plurality of first lines and the plurality of second lines, the auxiliary line generating a parasitic capacitance with respect to the at least one of the lines.

[0014] In the invention, in the distribution area in which the plurality of lines are arranged in parallel, a capacitance is generated between the adjacent lines. However, the parasitic capacitance is small in the line extending at the end of the distribution area because the adjacent line is present only on one side thereof. Therefore, according to the embodiment of the invention, the auxiliary line that generates the parasitic capacitance with respect to the line extending at the end is provided so as to extend along the end of the distribution area in terms of the direction of arrangement of the lines. Therefore, the similar capacitance as other lines is parasitic on the end line as well. Therefore, the capacitances which are parasitic on the plurality of lines are all equivalent, the change in capacitance can be detected accurately, so that the sensitivity of detection is improved.

[0015] Preferably, one or both of the plurality of first lines and the plurality of second lines include one line and lines being arranged on both sides of the one line and being different in terms of the length of a portion which extends in parallel to the one line, and the distance from the one line is wider on the side of the line being longer in terms of the length of the portion which extends in parallel to the one line than on the side of the line being shorter in terms of the length of the portion which extends in parallel to the one line. The long lines have a larger parasitic capacitance by an amount corresponding to the long opposing length with respect to the adjacent line. However, since the distance between the adjacent lines is increased, the parasitic capacitance may be reduced. Therefore, since the capacitances which are parasitic on the plurality of lines may all be equalized, the change in capacitance can be detected accurately, so that the sensitivity of detection is improved.

[0016] Preferably, one or both of the plurality of first lines and the plurality of second line include lines being different in terms of the length, and the width of the lines having a long distribution length is at least partly wider than the lines having a short distribution length. When the line is long, the electric resistance is increased correspondingly. However, since the width of at least part of the lines is increased, the electric resistances of the plurality of lines are the same. Therefore, the change in capacitance can be detected accurately, so that the sensitivity of detection is improved.

[0017] Preferably, the auxiliary line includes a first auxiliary line and a second auxiliary line arranged outsides the lines at the both ends of one or both of the plurality of first lines and the plurality of second lines in terms of the direction of arrangement thereof, and the first auxiliary line and the second auxiliary line generate the parasitic capacitances with respect to the lines at both ends respectively. In this arrangement, since the parasitic capacitances may be added to the lines located at the both ends of the distribution area by the first auxiliary line and the second auxiliary line, the capacitances which are parasitic on the respective plurality of lines may be equalized. Therefore, the change in capacitance can be detected accurately, so that the sensitivity of detection is improved.

[0018] Preferably, the plurality of first line extend from one of the ends of the plurality of first electrodes in the input area to the plurality of first terminals so as to extend along an end side of the input area, the auxiliary line includes a first auxiliary line and a second auxiliary line arranged outsides the lines at the both ends of the plurality of first lines in terms of the direction of arrangement thereof, and the first auxiliary line and the second auxiliary line generate the parasitic capacitances with respect to the lines at the both ends respectively.

[0019] Preferably, the first auxiliary line constitutes a shield line which surrounds the input area on the outer peripheral side. In this configuration, the influence of noise entering from the outside is prevented. Therefore the change in capacitance is detected accurately, so that the sensitivity of detection is improved.

[0020] Preferably, the plurality of second lines extends from the both ends of the plurality of second electrodes in the display area to the plurality of second terminals, the plurality of second lines extending from the one of the both ends of the plurality of second electrodes has a different length from the plurality of second lines extending from the other ends, the auxiliary line extends at least outside the line located on the opposite side from the input area from between the lines arranged at both ends of the plurality of longer second lines in terms of the direction of arrangement of the lines. The second line located at the end on the side of the input area from between the both ends of the second distribution area extending from the second input area to the second signal input/output area extends in parallel to second translucent electrode patterns, and the parasitic capacitance is generated with respect to the second translucent electrode patterns, so that the auxiliary line is provided only at the end opposite from the side of the input area.

[0021] According to a second aspect of the invention, there is provided an electrostatic capacitance input device including a plurality of first electrodes extending in a first direction and a plurality of second electrodes extending in a second direction intersecting the first direction including a plurality of first lines extending in parallel to each other from the plurality of first electrodes to a plurality of first terminals, and a plurality of second lines extending in parallel to each other from the plurality of second electrode to a plurality of second terminals, the first lines and the second lines being formed outside the input area, and one or both of the plurality of first lines and the plurality of second lines include one line and lines being arranged on both sides of the one line and being different in terms of the length of a portion which extends in parallel to the one line, and the distance from the one line is wider on the side of the line being longer in terms of the length of the portion which extends in parallel to the one line than on the side of the line being shorter in terms of the length of the portion which extends in parallel to the one line. The long lines have a larger parasitic capacitance by an amount corresponding to the long opposing length with respect to the adjacent line. However, since the distance between the adjacent lines is increased, the parasitic capacitance may be reduced. Therefore, the capacitances which are parasitic on the plurality of lines are all equivalent, the change in capacitance can be detected accurately, so that the sensitivity of detection is improved.

[0022] When configuring a display apparatus with an input function using the electrostatic capacitance input device to which the invention is applied, an image forming apparatus is overlapped on the opposite side from an input surface in the electrostatic capacitance input device.

[0023] The display apparatus with an input function to which the invention is applied may be used in electronic

apparatuses such as mobile phone sets, electronic data books, and terminal devices such as POS terminals.

BRIEF DESCRIPTION OF THE DRAWINGS

[0024] The invention will be described with reference to the accompanying drawings, wherein like numbers reference like elements.

[0025] FIG. **1** is an explanatory drawing schematically showing a configuration of a display apparatus with an input function to which the invention is applied.

[0026] FIG. **2** is an explanatory drawing schematically showing a planer configuration of the display apparatus with an input function to which the invention is applied.

[0027] FIG. **3**A is an explanatory drawing showing a planer configuration of translucent electrode patterns formed on an input device to which the invention is applied.

[0028] FIG. **3**B is a cross-sectional view taken along the line IIIB-IIIB.

[0029] FIG. **3**C is a schematic cross-sectional view of the input device showing a connecting structure between the translucent electrode patterns and metal lines.

[0030] FIG. **4** is an explanatory drawing showing an example of configuration of first lines formed in the input device to which the invention is applied.

[0031] FIG. **5** is an explanatory drawing showing an example of configuration of the first line formed in the input device according to a reference example drawing in the invention.

[0032] FIG. **6** is an explanatory drawing showing an example of configuration of second lines formed in the input device to which the invention is applied.

[0033] FIG. **7** is an explanatory drawing showing a configuration of the second lines formed in the input device according to a reference example in the invention.

[0034] FIG. **8** is an explanatory drawing of an electronic apparatus in which a display apparatus with an input function according to the invention.

[0035] FIG. **9** is an explanatory drawing schematically showing a planer configuration of the display apparatus with an input function according to a reference example in the invention.

DESCRIPTION OF EXEMPLARY EMBODIMENTS

[0036] Referring now to the drawings, embodiments of the invention will be described. In the drawings referred to in the following description, scaling is differentiated among respective layers or members in order to make the respective layers and members recognizable in the drawing.

General Configuration

[0037] FIG. **1** and FIG. **2** are respectively an explanatory drawing schematically showing a configuration of a display apparatus with an input function to which the invention is applied, and an explanatory drawing schematically showing a planar configuration of the display apparatus with an input function. In FIG. **2**, the numbers of first translucent electrode patterns, second translucent electrode patterns, or lines are reduced from the actual numbers.

[0038] In FIG. **1**, a display apparatus with an input function **100** generally includes a liquid crystal device **50** of an active matrix type as an image forming apparatus, and a panel-shaped input device **10** (touch panel) arranged so as to be overlapped with a surface of the image forming apparatus in the side where a display light is emitted from. The liquid crystal device **50** includes a translucent, reflective, or transflective liquid crystal panel **50***a,* and in the case of the translucent or the transflective liquid crystal panel, a backlight device (not shown) is arranged on the opposite side from the side where the display light is emitted from. In the liquid crystal device **50**, a wave plate and a polarizing plate (not shown) are arranged so as to be overlapped with the liquid crystal panel **50***a*. The liquid crystal panel **50***a* includes an element substrate **51**, an opposed substrate **52** arranged so as to oppose the element substrate **51**, and a liquid crystal layer held between the opposed substrate **52** and the element substrate **51**, and a flexible substrate **53** is connected to the element substrate **51** in an area protruded from an edge of the opposed substrate **52**. The element substrate **51** may include a drive IC mounted by COG (Chip-on-Glass) mounting. In either cases, the liquid crystal device **50** is able to display moving images and still images, and displays instruction images corresponding to entered data when entering data in the input device **10**. Therefore, a user is able to enter data by touching the instruction images displayed on the input device **10** with his/her finger.

[0039] The input device **10** is an electrostatic capacitance touch panel and includes a translucent substrate **15**, a translucent cover substrate **40** adhered to the translucent substrate **15** via an adhesive agent layer (translucent resin layer), described later, and a flexible substrate **19** connected to an end of the translucent substrate **15**. A drive circuit (not shown) for detecting an input position in the input device **10** is connected to the flexible substrate **19**, and a connected area between the flexible substrate **19** and the translucent substrate **15** corresponds to a signal input/output area, described later. In the input device **10**, an input surface **10***b* is configured by an upper surface of the cover substrate **40**, and a substantially center area of the cover substrate **40** corresponds to an input area **10***a* used for entry by a finger tip.

[0040] As shown in FIG. **2**, in an area corresponding to the input area **10***a* of the surface on the side of the input surface **10***b* of the translucent substrate **15**, a plurality of rows of first translucent electrode patterns **11** extending in a first direction indicated by an arrow X and a plurality of rows of second translucent electrode patterns **12** extending in a second direction intersecting the first direction indicated by an arrow Y.

[0041] In the input device **10** having the configuration as described above, when a voltage is applied in sequence to the plurality of first translucent electrode patterns **11** and the second translucent electrode patterns **12** to charge the same, if a finger as a conductive substance touches any point in the input area **10***a,* a capacitance is provided between the first translucent electrode patterns **11** and the second translucent electrode patterns **12** and the finger. Consequently, the electrostatic capacitance is lowered, so that a point which is touched by the finger is detected.

Configuration of Input Area

[0042] FIGS. **3**A, **3**B, and **3**C are respectively an explanatory drawing showing a planer configuration of translucent electrode patterns formed on the input device to which the invention is applied, a schematic cross-sectional view of the input device taken along a position corresponding to the line IIIB-IIIB, and a cross-sectional view showing a connecting structure between the translucent electrode patterns and metal

lines. In FIG. **3**A, part of the first translucent electrode patterns and the second translucent electrode patterns is extracted.

[0043] As shown in FIGS. **1**, **2**, **3**A, and **3**B, the first translucent electrode patterns **11** and the second translucent electrode patterns **12** are formed on the same surface of the translucent substrate **15** in the same layer in the input device **10** of the embodiment. In the input area **10***a*, since the first translucent electrode patterns **11** and the second translucent electrode patterns **12** are formed on the same surface of the translucent substrate **15** in the same layer, there exist a plurality of intersecting portions **18** between the first translucent electrode patterns **11** and the second translucent electrode patterns **12**. Therefore, in this embodiment, at all the plurality of intersecting portions **18**, one of the first translucent electrode patterns **11** and the second translucent electrode patterns **12** are connected at the intersecting portions **18**, while the other translucent electrode patterns are disconnected. In this embodiment, at all the plurality of intersecting portions **18**, the first translucent electrode patterns **11** are connected and the second translucent electrode patterns **12** are disconnected. On the upper side of the first translucent electrode patterns **11** and the second translucent electrode patterns **12**, a translucent inter-layer insulation film **4***b* is formed substantially entirely of the input area **10***a* and over a peripheral area **10***e* located outside the input area **10***a*, and translucent relay electrodes **5***a* for electrically connecting the second translucent electrode patterns **12** which are disconnected at the intersecting portions **18** with respect to each other are formed on the upper side of the translucent inter-layer insulation film **4***b* via contact holes **4***c* of the inter-layer insulation film **4***b*. Therefore, the second translucent electrode patterns **12** are electrically connected in the direction Y.

[0044] The first translucent electrode patterns **11** and the second translucent electrode patterns **12** includes a rhombus-shaped large-area pad portions **11***a* and **12***a* (large-area portion) in areas interposed between the intersecting portions **18** respectively, and the connecting portions **11***c* located at the intersecting portions **18** have an elongated shape narrower than the pad portions **11***a* in the first translucent electrode patterns **11**. The relay electrodes **5***a* are also formed into an elongated rectangular shape which is narrower than the pad portions **11***a* and **12***a*.

[0045] In the translucent substrate **15** configured as described above, the translucent cover substrate **40** is adhered thereto on a surface where the first translucent electrode patterns **11** and the second translucent electrode patterns **12** are formed in the input area **10***a* by an adhesive agent layer **30**.

[0046] Also, in the translucent substrate **15**, a plurality of metal lines **9***a* for electrically connecting the first translucent electrode patterns **11** and the second translucent electrode patterns **12** respectively are formed on the outer area (peripheral area **10***e*) of the input area **10***a*, and ends of the metal lines **9***a* constitute terminals **19***a* for connecting the flexible substrate **19**. The metal lines **9***a* constitute first lines **911** to **919** and second lines **921** to **926** and **929** which will be described referring to FIG. **2**.

[0047] In the input device **10** configured as described above, in this embodiment, the presence of the first translucent electrode patterns **11** and the second translucent electrode patterns **12** is visible due to the difference in reflecting power between an area where the first translucent electrode patterns **11** and the second translucent electrode patterns **12** are formed and an area where the first translucent electrode patterns **11** and the second translucent electrode patterns **12** are not formed, so that the appearance is deteriorated. Accordingly, in this embodiment, materials and the thicknesses of the first translucent electrode patterns **11** and the second translucent electrode patterns **12** are set on the basis of a reflection preventing technology utilizing an optical interference for the purpose of preventing the lowering of the appearance. The reflection preventing technology utilizing the optical interference is a technology to alleviate the reflected light by inverting the phases of the reflected lights reflected from the surface of a thin film and from a boundary between the substrate and the thin film for cancelling the reflected lights with respect to each other. In other words, the refractive index (n0) of an air layer, the refractive index (n_1) and a film thickness (d_1) of the thin film, and the refractive index (n_2) of the substrate satisfy the following expression;

$$(n_1)^2 = n0 \times n_2$$

$$n_1 \times d_1 = \lambda/4,$$

the refractive index at a wavelength λ (nm) becomes 0%. By utilizing the reflection preventing technology, the difference in reflecting power between the area where the first translucent electrode patterns **11** and the second translucent electrode patterns **12** are formed and the area where the first translucent electrode patterns **11** and the second translucent electrode patterns **12** are not formed is resolved, so that the presence of the first translucent electrode patterns **11** and the second translucent electrode patterns **12** is made invisible. Therefore, in this embodiment, the first translucent electrode patterns **11** and the second translucent electrode patterns **12** are formed of ITO films **3***a*, and multilayer films **20** for realizing the reflection preventing structure are formed between the first translucent electrode patterns **11** and the translucent substrate **15** and between the second translucent electrode patterns **12** and the translucent substrate **15**. As the multilayer film **20**, for example, a laminated film composed of an ITO film **1***a* and a silicon oxide film **2***a* may be used. The first translucent electrode patterns **11** and the second translucent electrode patterns **12** may be formed of IZO (Indium Zinc Oxide) films. Laid Around Structure of Lines

[0048] Referring again to FIG. **2**, in this embodiment, a first distribution area **955** having the plurality of first lines **911** to **919** extending from the plurality of first translucent electrode patterns **11** to a first signal input/output area **950** in parallel to each other is formed in the peripheral area **10***e* located outside the input area **10***a* on the translucent substrate **15**. The first signal input/output area **950** is arranged on one side of the input area **10***a* in terms of the direction Y, and the first distribution area **955** extends from one end side **10***s* of the input area **10***a* in terms of the direction X along the end side **10***s* to the first signal input/output area **950** while being bent by a plurality of portions. Therefore, in this embodiment, the first distribution area **955** (the first lines **911** to **919**) includes a portion **955***d* extending linearly in the direction X from the first translucent electrode patterns **11** in the peripheral area **10***e*, a portion **955***c* bent at a right angle from the portion **955***d* along the end side **10***s* of the input area **10***a* in the direction Y, a portion **955***b* bent at a right angle from the portion **955***c* in the direction X toward an area interposed between the first signal input/output area **950** and the input area **10***a*, and a portion **955***a* bent at a right angle from the portion **955***b* in the direction Y toward the first signal input/output area **950**.

[0049] In the peripheral area **10***e* located outside the input area **10***a* on the translucent substrate **15**, the plurality of

second lines **921** to **926** and **929** extending from the plurality of second translucent electrode patterns **12** extend to a second signal input/output area **960**. The second signal input/output area **960** is also arranged on one side of the input area **10***a* in terms of the direction Y like the first signal input/output area **950**, and the second signal input/output area **960** and the first signal input/output area **950** are arranged linearly along the side of the translucent substrate **15**.

[0050] The input area **10***a* is divided into a first input area **101***a* positioned on the side of the second signal input/output area **960** in terms of the direction Y and a second input area **102***a* positioned on the opposite side from the second signal input/output area **960** in terms of the direction Y and, in association with this, the second translucent electrode patterns **12** are also divided between the first input area **101***a* and the second input area **102***a*. Therefore, the distribution area (second distribution area) extending from the plurality of second translucent electrode patterns **12** is divided into two areas, and in a short distance second distribution area **961** from these two areas having second lines **929** extending from the first input area **101***a* toward the second signal input/output area **960** aligned in parallel, the second lines **929** extend at a sufficient distance from each other by substantially the same length. Therefore, even when the distribution resistance and the parasitic capacitance are varied among the second lines **929**, it does not cause any problem because the level of itself is low.

[0051] In contrast, a long distance second distribution area **962** extending from the second input area **102***a* toward the second signal input/output area **960** extends from an end side **10***t* positioned on the side of the input area **10***a* opposite from the second signal input/output area **960** along an end side **10***u* of the input area **10***a* on the opposite side from an end side **10***s* in terms of the direction X to the second signal input/output area **960** while being bent by a plurality of positions. Therefore, in this embodiment, the long distance second distribution area **962** (the second lines **921** to **926**) includes a portion **962***e* extending linearly in the direction Y from the end side **10***t* of the input area **10***a* on extensions of the second translucent electrode patterns **12**, a portion **962***d* extending in the direction X from the portion **962***e* in parallel to the end side **10***t*, a portion **962***c* bent at a right angle from the portion **962***d* in the direction Y along the end side **10***u* of the input area **10***a*, a portion **962***b* bent at a right angle from the portion **962***c* in the direction X toward an area interposed between the second signal input/output area **960** and the input area **10***a*, and a portion **962***a* bent at a right angle from the portion **962***b* in the direction Y toward the second signal input/output area **960**.

Countermeasure for Variations in Parasitic Capacitance and Distribution Resistance

[0052] As described in conjunction with FIG. **2**, since the first distribution area **955** extends from the one end side **10***s* of the input area **10***a* in terms of the direction X to the first signal input/output area **950** along the end side **10***s*, the lengths of the respective first lines **911** to **919** are significantly different from each other and the lines are close to each other in the first distribution area **955**. Therefore, in this configuration, the capacitances which are parasitic between the adjacent lines or the distribution resistances of the respective lines are significantly different among the plurality of first lines **911** to **919**. In the case of the first lines **911** and **919** which are located at both ends in terms of the direction of arrangement of the lines (the direction of the width of the first distribution area **955**) from among the first lines **911** to **919**, the parasitic capacitance is small since each of them has the adjacent line only on one side thereof.

[0053] The long distance second distribution area **962** extends to the second signal input/output area **960** from the end side **10***t* of the input area **10***a* along the end side **10***u*, the lengths of the respective second lines **921** to **926** are significantly different from each other and the lines are close to each other in the long distance second distribution area **962**. Therefore, in this configuration, the capacitances which are parasitic between the adjacent lines and the distribution resistances of the respective lines are significantly different among the plurality of second lines **921** to **926**. In the case of the second line **926** which is located at an outer end (an end on the side apart from the input area **10***a*) in terms of the direction of arrangement of the lines (the direction of the width of the long distance second distribution area **962**) from among the second lines **921** to **926**, the parasitic capacitance is small since it has the adjacent line only on one side thereof. The second line **921** which is located at an inner end (an end close to the input area **10***a*) from among the second lines **921** to **926** is in parallel with bottom sides of pad potions divided into a triangle shape of the first translucent electrode patterns **11**, and hence has a parasitic capacitance close to the second lines **922** to **925** passing on the inner side in terms of the direction of the width of the long distance second distribution area **962**.

[0054] In order to solve the line-to-line variations in parasitic capacitance, in this embodiment, a first auxiliary line **971** and a second auxiliary line **972** extend along the both ends of the first distribution area **955** so as to generate the parasitic capacitance with respect to the first lines **911** and **919** extending at the both ends. From between the first auxiliary line **971** and the second auxiliary line **972**, the first auxiliary line **971** includes the portion **955***d* extending linearly in the direction X in the peripheral area **10***e*, the portion **955***c* bent at a right angle from the portion **955***d* along the end side **10***s* of the input area **10***a* in the direction Y, the portion **955***b* bent at a right angle from the portion **955***c* in the direction X toward the area interposed between the first signal input/output area **950** and the input area **10***a*, and the portion **955***a* bent at a right angle from the portion **955***b* in the direction Y toward a position adjacent to the first signal input/output area **950** like the first distribution area **955** (first lines **911** to **919**). The second auxiliary line **972** also includes the portion **955***d* extending linearly in the direction X in the peripheral area **10***e*, the portion **955***c* bent at a right angle from the portion **955***d* along the end side **10***s* of the input area **10***a* in the direction Y, the portion **955***b* bent at a right angle from the portion **955***c* in the direction X toward the area interposed between the first signal input/output area **950** and the input area **10***a*, and the portion **955***a* bent at a right angle from the portion **955***b* in the direction Y toward the position adjacent to the first signal input/output area **950** like the first distribution area **955** (first lines **911** to **919**).

[0055] In this embodiment, in the long distance second distribution area **962** as well, the first auxiliary line **971** extends along the outer end so as to generate a parasitic capacitance with respect to the second line **926** extending at the end like the first distribution area **955**. Therefore, the first auxiliary line **971** includes the portion **962***e* extending linearly in the direction Y, the portion **962***d* extending in the direction X from the portion **962***e* in parallel to the end side **10***t*, the portion **962***c* bent at a right angle from the portion **962***d* in the direction Y along the end side **10***u* of the input area

10*a,* the portion **962***b* bent at a right angle from the portion **962***c* in the direction X toward the area interposed between the second signal input/output area **960** and the input area **10***a,* and the portion **962***a* bent at a right angle from the portion **962***b* in the direction Y toward the side of the second signal input/output area **960** like the long distance second distribution area **962** (the second lines **921** to **926**).

[0056] The first auxiliary line **971** here extends at a position away from the input area **10***a* in comparison with the second auxiliary line **972**, and constitutes an outer peripheral side shield line which surrounds the input area **10***a* on the outer peripheral side. The second auxiliary line **972** is retained at the same potential as the first auxiliary line **971** and, in this embodiment, a constant potential (ground potential) is applied on the first auxiliary line **971** and the second auxiliary line **972**.

[0057] When forming the first auxiliary line **971** and the second auxiliary line **972**, specifically, the first auxiliary line **971** and the second auxiliary line **972** are formed simultaneously with the first lines **911** to **919** and the second lines **921** to **926** and **929**, and the first auxiliary line **971** and the second auxiliary line **972** are connected to the outside via terminals arranged in parallel in the first signal input/output area **950** and the second signal input/output area **960**, and a ground potential is applied from the outside to the first auxiliary line **971** and the second auxiliary line **972**. In this configuration, the first auxiliary line **971** and the second auxiliary line **972** are formed together with the first lines **911** to **917** and the second lines **921** to **926** and **929** by the metal lines **9***a* shown in FIG. **3**C. Therefore, since the first auxiliary line **971** and the second auxiliary line **972** are formed without providing additional steps, the productivity is improved.

[0058] When forming the first auxiliary line **971** and the second auxiliary line **972**, the first auxiliary line **971** and the second auxiliary line **972** may be formed in the different layer from the first lines **911** to **919** ad the second lines **921** to **926** and **929**. For example, as shown in FIG. **3**C, it is also possible to cover the first lines **911** to **919** and the second lines **921** to **926** and **929** with the inter-layer insulation film **4***b,* form the first auxiliary line **971** and the second auxiliary line **972** on the upper side of the inter-layer insulation film **4***b,* and connect the first auxiliary line **971** and the second auxiliary line **972** to the terminals arranged in parallel in the first signal input/output area **950** and the second signal input/output area **960** in parallel via an area from which the inter-layer insulation film **4***b* is removed. In this case as well, the first auxiliary line **971** and the second auxiliary line **972** may simply be connected to the outside via the terminals and applied with a ground potential from the outside. In this configuration, the short-circuit does not occur even when the first auxiliary line **971** and the second auxiliary line **972** are formed so as to intersect the first lines **911** to **919** and the second lines **921** to **926** and **929**. Therefore, a configuration in which the first auxiliary line **971** and the second auxiliary line **972** are connected to each other or a configuration in which the first auxiliary line **971** surrounds the entire circumference of the input area **10***a* on the outer peripheral side may be realized. With the configuration in which the first auxiliary line **971** and the second auxiliary line **972** are connected, the number of terminals for applying the ground potential to the first auxiliary line **971** and the second auxiliary line **972** may advantageously be reduced. With the configuration in which the first auxiliary line **971** surrounds the entire circumference of the input area **10***a* on the outer peripheral side, the noise entry into the input area **10***a* from the outside is reliably prevented.

[0059] In this embodiment, in the first lines **911** to **919** formed in the first distribution area **955**, the distance between the adjacent lines is wider for the lines having a long distribution length than for the lines having a short distribution length at least partly in the longitudinal direction. In this embodiment, since the distribution length is reduced from the first line **911** which is located on the outer side toward the line which is located inner side in sequence, the distance between the lines being adjacent on the outer side is wider than the distance between the lines being adjacent on the inner side at least partly in the longitudinal direction. In the first lines **911** to **919** formed in the first distribution area **955**, the width of the lines having a long distribution length is wider than the width of the lines having a short distribution length. In this embodiment, since the distribution length is reduced from the first line **911** which is located on the outer side toward the lines which are located on the inner side in sequence, the width of the lines being located on the outer side is wider than the width of the lines being located on the inner side at least partly in the longitudinal direction.

[0060] In the second lines **921** to **926** formed in the long distance second distribution area **962**, the distance between the adjacent lines is wider for the lines having a long distribution length than for the lines having a short distribution length at least partly in the longitudinal direction. In this embodiment, since the distribution length is increased from the second line **921** which is located on the inner side toward the lines which are located on the outer side in sequence, the distance between the lines being adjacent on the outer side is wider than the distance between the lines being adjacent on the inner side at least partly in the longitudinal direction. In the second lines **921** to **926** formed in the long distance second distribution area **962**, the width of the lines having a long distribution length is wider than the width of the lines having a short distribution length at least partly in the longitudinal direction. In this embodiment, since the distribution length is increased from the second line **921** which is located on the inner side toward the lines located on the outer side in sequence, the width of the lines being located on the outer side is wider than the width of the lines being located on the inner side at least partly in the longitudinal direction.

Examples of Configuration of First Lines **911** to **919**

[0061] Referring now to FIG. **4** and FIG. **5**, advantages of the examples in which the first lines **911** to **919** are configured on the basis of the rules described above will be described. FIG. **4** is an explanatory drawing showing an example of configuration of the first lines **911** to **919** or the like formed in the input device **10** to which the invention is applied. In FIG. **4**, in Column **1**, Column **2**, Column **3**, Column **4**, Column **5**, Column **6**, and Column **7** from the left to the right, reference numerals of the first lines shown in FIG. **2**, the portions shown in FIG. **2**, the lengths of the respective portions, the widths of the respective portions, the distance from the first line located on the inner side, the parasitic capacitance, and the distribution resistance are shown. In Column **6**, the values in parentheses are values of the capacitance being parasitic with respect to the line located on the inner side. The lengths and the widths of the first lines **911** to **919** are shown for the respective portions **955***a* to **955***d* shown in FIG. **2**.

[0062] FIG. **5** is an explanatory drawing showing a configuration of the first lines **911** to **919** formed in the input device

10 according to a reference example in the invention, which corresponds to an example in which the distances between all the first lines **911** to **919** are equalized without forming the first auxiliary line **971** and the second auxiliary line **972** in the configuration shown in FIG. **2**. Columns **1** to **7** in FIG. **5** correspond to Columns **1** to **7** in FIG. **4**.

[0063] The parasitic capacitances shown in FIG. **4** and FIG. **5** are values calculated on the basis of the dielectric constant of an insulation layer which covers the periphery of the lines, the width of the line, the distance between the lines, and the opposed length between the lines.

[0064] As is understood from FIG. **4**, in the first lines **911** to **919**, the first lines **911** and **919** located at the both ends are formed with the first auxiliary line **971** and the second auxiliary line **972**, and the distance between the first line **911** and the first line **912** is 55 μm at the portions **955***b* and **955***c*, while the distance between the first line **912** and the first line **913** is 45 μm at the portion **955***b* and **955***c*. In this manner, the distance between the adjacent lines is wider for the lines having a long distribution length than for the lines having a short distribution length at least partly in the longitudinal direction. Therefore, the capacitance value which is parasitic on the first line **911** is 4.88 pF which is the sum of the capacitances of the first auxiliary line **971** and the first line **912**, and is equivalent to the capacitance values (4.83 to 5.04 pF) which are parasitic on other first lines **912** to **918**. The capacitance value which is parasitic on the first line **919** is 4.82 pF which is the sum of the capacitances of the second auxiliary line **972** and the first line **918**, and is equivalent to the capacitance values (4.83 to 5.04 pF) which are parasitic on other first lines **912** to **918**.

[0065] Furthermore, in the first lines **911** to **919**, the dimension of a narrowest portion of the longest first line **911** is 65 μm, while the dimension of a narrowest portion of the first line **912** is 60 μm. In this manner, the width of the lines having a long distribution length is wider than the width of the lines having a short distribution length at least partly in the longitudinal direction. Therefore, the distribution resistance of the first line **911** is 375Ω, and is substantially equivalent to the electric resistance (389 to 531Ω) of other first liens **912** to **919**. The sheet resistance of the metal line is 0.2Ω/□.

[0066] In contrast, as is understood from FIG. **5**, when the rules in the invention are not applied, for example, when the distribution distance is equalized among all the first lines **911** to **919**, the capacitance values which are parasitic on the first lines **911** to **919** are significantly varied from 4.01 to 12.87 pF. However, the distribution resistances of the first lines **911** to **919** are substantially equivalent from 233 to 307Ω, since the widths of the lines are adjusted in this reference example.

[0067] The configuration described in conjunction with FIG. **4** and FIG. **5** is illustrative only, and various modifications may be made without departing from the scope of the invention.

Examples of Configuration of Second Lines **921** to **926**

[0068] Referring now to FIG. **6** and FIG. **7**, advantages of the example in which the second lines **921** to **926** are configured on the basis of the rules according to the invention will be described.

[0069] FIG. **6** is an explanatory drawing showing an example of configuration of the second lines **921** to **926** or the like formed in the input device **10** to which the invention is applied. In FIG. **6**, in Column **1**, Column **2**, Column **3**, Column **4**, Column **5**, Column **6**, and Column **7** from the left to the right, reference numerals of the first lines shown in FIG. **2**, the portions shown in FIG. **2**, the lengths of the respective portions, the widths of the respective portion, the distance from the first line located on the inner side, the parasitic capacitance, and the distribution resistance are shown. In Column **6** where the parasitic capacitance is shown, the values in parentheses are values of the capacitance which is parasitic with respect to the line located on the outer side. A value attached with an asterisk is a value of the capacitance which is parasitic between the second line **921** and the first translucent electrode patterns **11**. The lengths and the widths of the second lines **921** to **926** are shown for the respective portions **962***a* to **962***e* shown in FIG. **2**.

[0070] FIG. **7** is an explanatory drawing showing a configuration of the second lines **921** to **926** formed in the input device **10** according to a reference example in the invention, which corresponds to an example in which the distances of all the second lines **921** to **926** are equalized without forming the first auxiliary line **971** and the second auxiliary line **972** in the configuration shown in FIG. **2**. Columns **1** to **7** in FIG. **7** correspond to Columns **1** to **7** in FIG. **6**.

[0071] The parasitic capacitances shown in FIG. **6** and FIG. **7** are values calculated on the basis of the dielectric constant of an insulation layer which covers the periphery of the lines, the width of the line, the distance between the lines, and the opposed length between the lines.

[0072] As is understood from FIG. **6**, in the second lines **921** to **926**, the second line **926** located at the outermost position is formed with the first auxiliary line **971** and the distance between the second line **926** and the second line **925** is 56 μm at the portions **962***b*, **962***c*, and **962***d*, while the distance between the second line **923** and the second line **922** is 45 μm at the portions **962***b*, **962***c*, and **962***d*. In this manner, the distance between the adjacent lines is wider for the lines having a long distribution length than for the lines having a short distribution length at least partly in the longitudinal direction. Therefore, the capacitance which is parasitic on the second line **926** is 6.22 pF which is the sum of the capacitances of the first auxiliary line **971** and the second line **925**, and is equivalent to the capacitance values (6.14 to 6.31 pF) which are parasitic on other second lines **922** to **925**. The capacitance value which is parasitic on the second line **921** is 4.68 pF, and when a numeric value of 1.61 pF attached with an asterisk (the value of the capacitance which is parasitic between the second line **921** and the first translucent electrode patterns **11**) is considered, it becomes 6.29 pF, which is equivalent to the capacitance values (6.14 to 6.31 pF) which are parasitic on other second lines **922** to **925**.

[0073] Furthermore, in the second lines **921** to **926**, the dimension of a narrowest portion of the longest second line **926** is 70 μm, while the dimension of a narrowest portion of the second line **922** is 65 μm. In this manner, the width of the lines having a long distribution length is wider than the width of the lines having a short distribution length at least partly in the longitudinal direction. Therefore, the distribution resistance of the second line **926** is 511Ω, and is the substantially equivalent to the electric resistance (418 to 484Ω) of other second lines **921** to **925**.

[0074] In contrast, as is understood from FIG. **7**, when the rules in the invention are not applied, the capacitance values which are parasitic on the second lines **921** to **926** are significantly varied from 9.41 to 20.62 pF. However, the distribution resistances of the second lines **921** to **926** are substantially

equivalent from 376 to 426Ω, since the widths of the lines are adjusted in this reference example.

[0075] The configuration described in conjunction with FIG. **6** and FIG. **7** is illustrative only, and various modifications may be made without departing from the scope of the invention.

Main Advantages of the Embodiment

[0076] As described above, in the case of the lines at the ends of the first distribution area **955** and the long distance second distribution area **962**, the parasitic capacitance has a tendency to be reduced since the adjacent line is present only on one side. However, in this embodiment, since the first auxiliary line **971** and the second auxiliary line **972** are provided so as to extend along the ends of the first distribution area **955** and the long distance second distribution area **962**, the equivalent capacitances as other lines are parasitic on the lines at the ends. Therefore, the capacitances which are parasitic on the respective lines are equivalent, the change in capacitance can be detected accurately, so that the sensitivity of detection is improved.

[0077] In addition, since the shield line which surrounds the input area **10***a* on the outer peripheral side is configured by the first auxiliary line **971**, the influence of noise entering from the outside is prevented. Therefore the change in capacitance is detected accurately, so that the sensitivity of detection is improved.

[0078] Since the distance between the adjacent lines and the width of the line are adequately adjusted depending on the distribution length, the capacitances which are parasitic on the respective lines are equivalent. Therefore, the change in capacitance can be detected accurately, so that the sensitivity of detection is improved.

Other Embodiments

[0079] In the embodiment shown above, the liquid crystal device **50** is employed as the image forming apparatus. However, the organic electroluminescence apparatus or a plasma display apparatus may be used as the image forming apparatus.

[0080] In the embodiment shown above, only the first auxiliary line **971** is provided in the long distance second distribution area **962**. However the second auxiliary line **972** may be provided also in the inner peripheral side of the long distance second distribution area **962** depending on the layout or the like.

[0081] In the embodiment shown above, the example in which the input area **10***a* is divided has been described. However, even though the input area **10***a* is not divided, the present invention may be applied when the parasitic capacitance and the distribution resistance are varied among the lines.

Example of Application to Electronic Apparatus

[0082] Subsequently, an electronic apparatus to which the display apparatus with an input function **100** according to the embodiment described above is applied will be described. A configuration of a mobile-type personal computer having the display apparatus with an input function **100** is shown in FIG. **8**A. A personal computer **2000** includes the display apparatus with an input function **100** as a display unit and a body portion **2010**. The body portion **2010** is provided with a power source switch **2001** and a keyboard **2002**. A configuration of a mobile telephone set provided with the display apparatus with an input function **100** is shown in FIG. **8**B. A mobile telephone set **3000** includes a plurality of operation buttons **3001** and a scroll button **3002**, and the display apparatus with an input function **100** as the display unit. The screen displayed on the display apparatus with an input function **100** is scrolled by operating the scroll button **3002**. A configuration of a data mobile terminal (PDA: Personal Digital Assistants) to which the display apparatus with an input function **100** is applied is shown in FIG. **8**C. A data mobile terminal **4000** includes a plurality of operation buttons **4001** and a power source switch **4002**, and the display apparatus with an input function **100** as the display unit. When the power source switch **4002** is operated, various data such as an address book or schedule are displayed on the display apparatus with an input function **100**.

[0083] As the electronic apparatus to which the display apparatus with an input function **100** is applied includes terminal apparatuses such as digital still cameras, liquid crystal TV sets, car navigation systems, pagers, electronic databooks, word processors, work stations, TV telephones, POS terminals in addition to those shown in FIG. **8**A to **8**C.

What is claimed is:

1. An electrostatic capacitance input device having a plurality of first electrodes extending in a first direction and a plurality of second electrodes extending in a second direction intersecting the first direction in an input area, comprising:

a plurality of first lines extending in parallel to each other from the plurality of first electrodes to a plurality of first terminals, and

a plurality of second lines extending in parallel to each other from the plurality of second electrode to a plurality of second terminals,

the first lines and the second lines being formed outside the input area, and

an auxiliary line extending outside at least one of the lines at both ends in terms of the direction of arrangement of one or both of the plurality of first lines and the plurality of second lines, the auxiliary line generating a parasitic capacitance with respect to the at least one of the lines.

2. The electrostatic capacitance input apparatus according to claim **1**, wherein one or both of the plurality of first lines and the plurality of second lines include one line and lines being arranged on both sides of the one line and being different in terms of the length of a portion which extends in parallel to the one line, and the distance from the one line is wider on the side of the line being longer in terms of the length of the portion which extends in parallel to the one line than on the side of the line being shorter in terms of the length of the portion which extends in parallel to the one line.

3. The electrostatic capacitance input apparatus according to claim **1**, wherein one or both of the plurality of first lines and the plurality of second line include lines being different in terms of the length, and the width of the lines having a long distribution length is at least partly wider than the lines having a short distribution length.

4. The electrostatic capacitance input apparatus according to claim **1**, wherein the auxiliary line includes a first auxiliary line and a second auxiliary line arranged outsides the lines at the both ends of one or both of the plurality of first lines and the plurality of second lines in terms of the direction of arrangement thereof, and the first auxiliary line and the second auxiliary line generate the parasitic capacitances with respect to the lines at both ends respectively.

5. The electrostatic capacitance input device according to claim **1**, wherein the plurality of first line extend from one of

the ends of the plurality of first electrodes in the input area to the plurality of first terminals so as to extend along an end side of the input area,

the auxiliary line includes a first auxiliary line and a second auxiliary line arranged outsides the lines at the both ends of the plurality of first lines in terms of the direction of arrangement thereof, and the first auxiliary line and the second auxiliary line generate the parasitic capacitances with respect to the lines at the both ends respectively.

6. The electrostatic capacitance input device according to claim **4**, wherein the first auxiliary line constitutes a shield line which surrounds the input area on the outer peripheral side.

7. The electrostatic capacitance input device according to claim **1**, wherein the plurality of second lines extends from the both ends of the plurality of second electrodes in the display area to the plurality of second terminals,

the plurality of second lines extending from the one of the both ends of the plurality of second electrodes has a different length from the plurality of second lines extending from the other ends,

the auxiliary line extends at least outside the line located on the opposite side from the input area from between the lines arranged at both ends of the plurality of longer second lines in terms of the direction of arrangement of the lines.

8. An electrostatic capacitance having a plurality of first electrodes extending in a first direction and a plurality of second electrodes extending in a second direction intersecting the first direction comprising:

a plurality of first lines extending in parallel to each other from the plurality of first electrodes to a plurality of first terminals, and

a plurality of second lines extending in parallel to each other from the plurality of second electrode to a plurality of second terminals,

the first lines and the second lines being formed outside the input area, and

one or both of the plurality of first lines and the plurality of second lines include one line and lines being arranged on both sides of the one line and being different in terms of the length of a portion which extends in parallel to the one line, and the distance from the one line is wider on the side of the line being longer in terms of the length of the portion which extends in parallel to the one line than on the side of the line being shorter in terms of the length of the portion which extends in parallel to the one line.

9. A display apparatus with an input function comprising the electrostatic capacitance input device according to claim **1**, wherein an image forming apparatus is overlapped on the opposite side from an input surface in the electrostatic capacitance input device.

10. An electronic apparatus comprising the display apparatus with an input function according to claim **9**.

* * * * *