US 20080007538A1

(19) United States

(12) Patent Application Publication

(10) Pub. No.: US 2008/0007538 A1

(43) Pub. Date: Jan. 10, 2008

Kotera et al.

(54) DISPLAY DEVICE EQUIPPED WITH A TOUCH PANEL

(75) Inventors: **Masamichi Kotera**, Saitama (JP); **Kouichiro Takashima**, Tokyo (JP); **Hideki Sato**, Miyagi (JP); **Minoru Nakano**, Kanagawa (JP)

Correspondence Address:
LERNER, DAVID, LITTENBERG, KRUMHOLZ & MENTLIK
600 SOUTH AVENUE WEST
WESTFIELD, NJ 07090 (US)

(73) Assignee: **Sony Corporation**, Tokyo (JP)

(21) Appl. No.: **11/805,253**

(22) Filed: **May 22, 2007**

(30) **Foreign Application Priority Data**

May 24, 2006 (JP) P2006-144331

Publication Classification

(51) **Int. Cl.**
G06F 3/041 (2006.01)

(52) **U.S. Cl.** **345/173**

(57) **ABSTRACT**

A display device equipped with a touch panel may include a device chassis provided with an opening section, a display panel having a display surface disposed accessible through the opening section, a touch panel disposed on the display surface of the display panel and capable at least of selecting a function displayed on the display surface in response to a pressing operation on the touch panel, and a surface sheet for covering the touch panel on the opposite side to the display panel, and closing the opening section to form a substantially the same surface with the device chassis, wherein a reinforcing area for improving resistivity against pressing force applied from the outside may be provided in a predetermined range of the surface sheet.

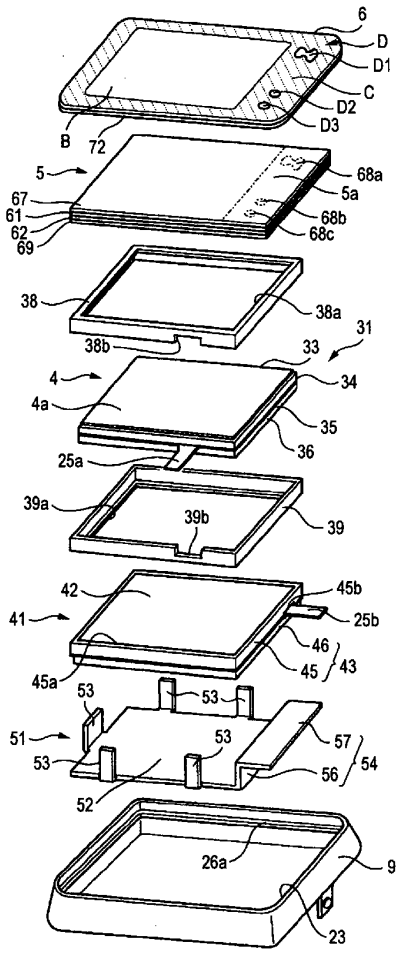

FIG. 1

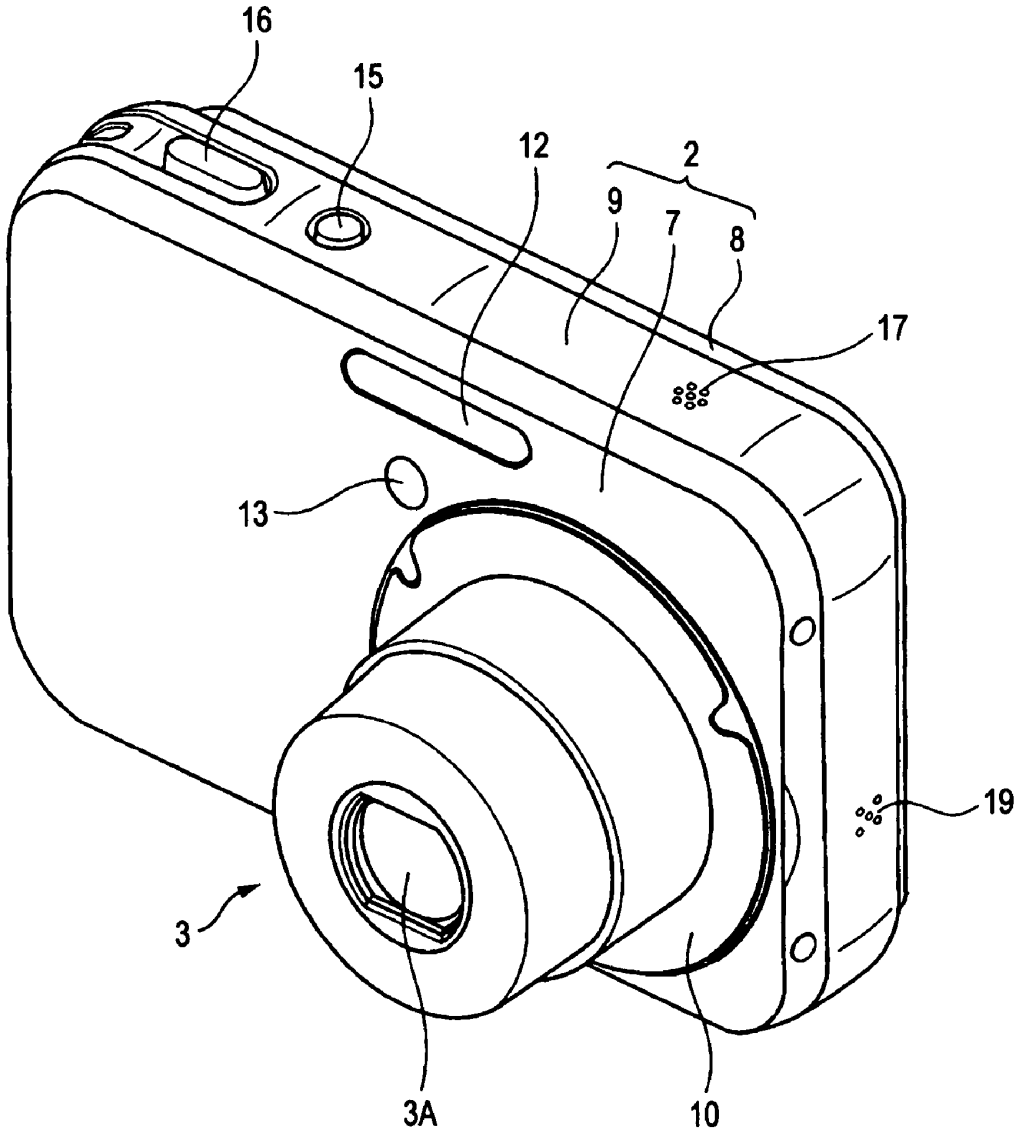

FIG. 2

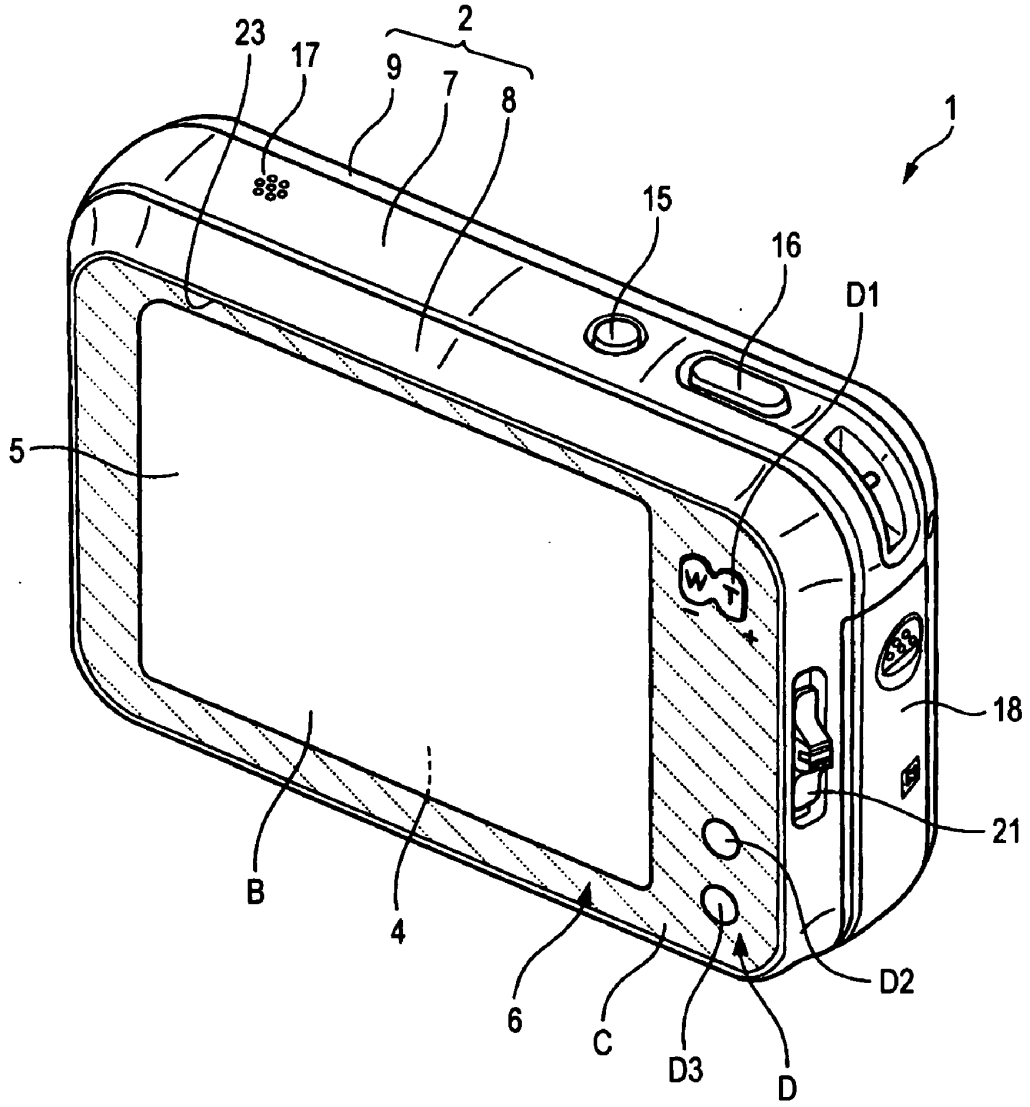

FIG. 3

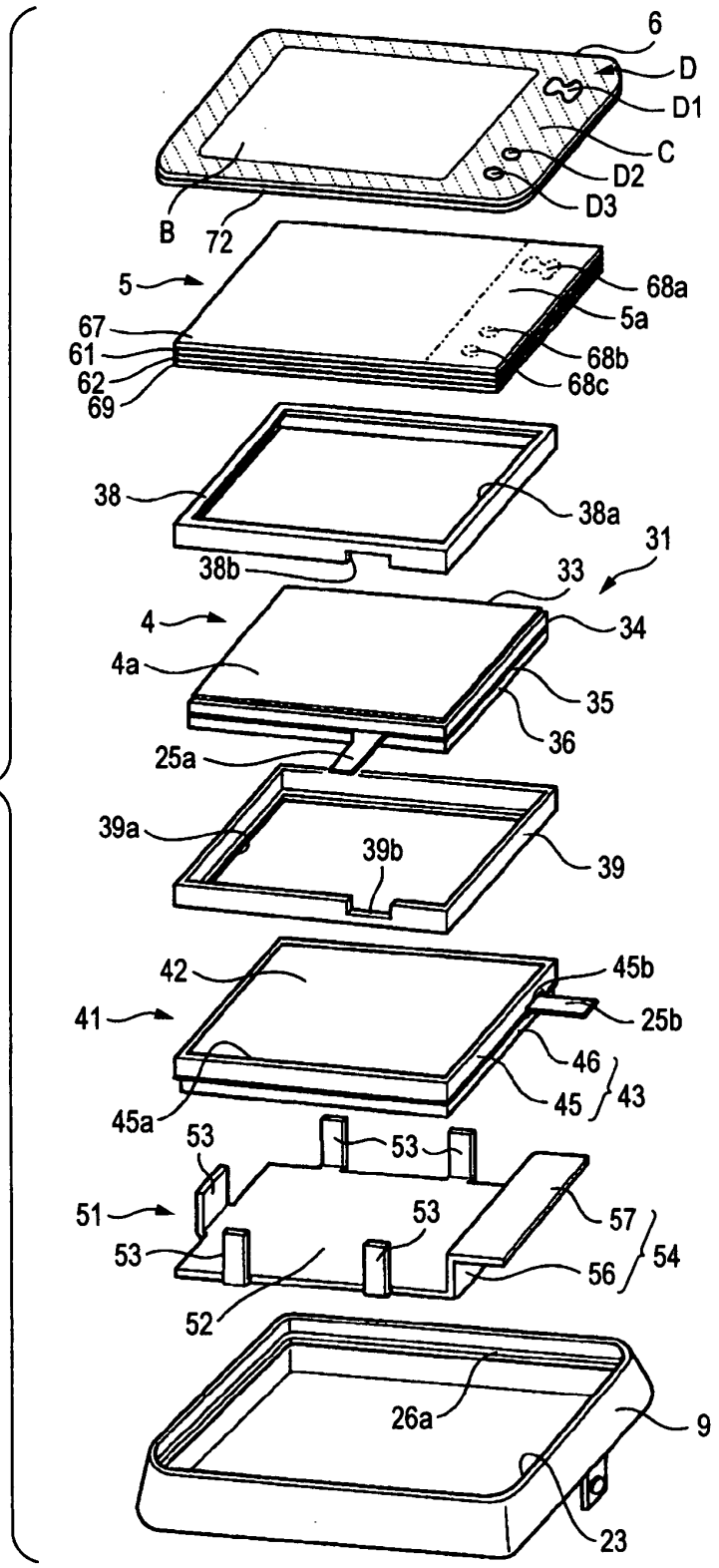
6
D
D1
C
D2
D3
B
72
5
68a
5a
67
61
68b
62
68c
69
38
38a
31
38b
33
4
34
4a
35
36
25a
39a
39b
39
42
45b
41
25b
46
45
43
45a
53
53
51
53
57
53
54
56
52
26a
9
23

FIG. 4

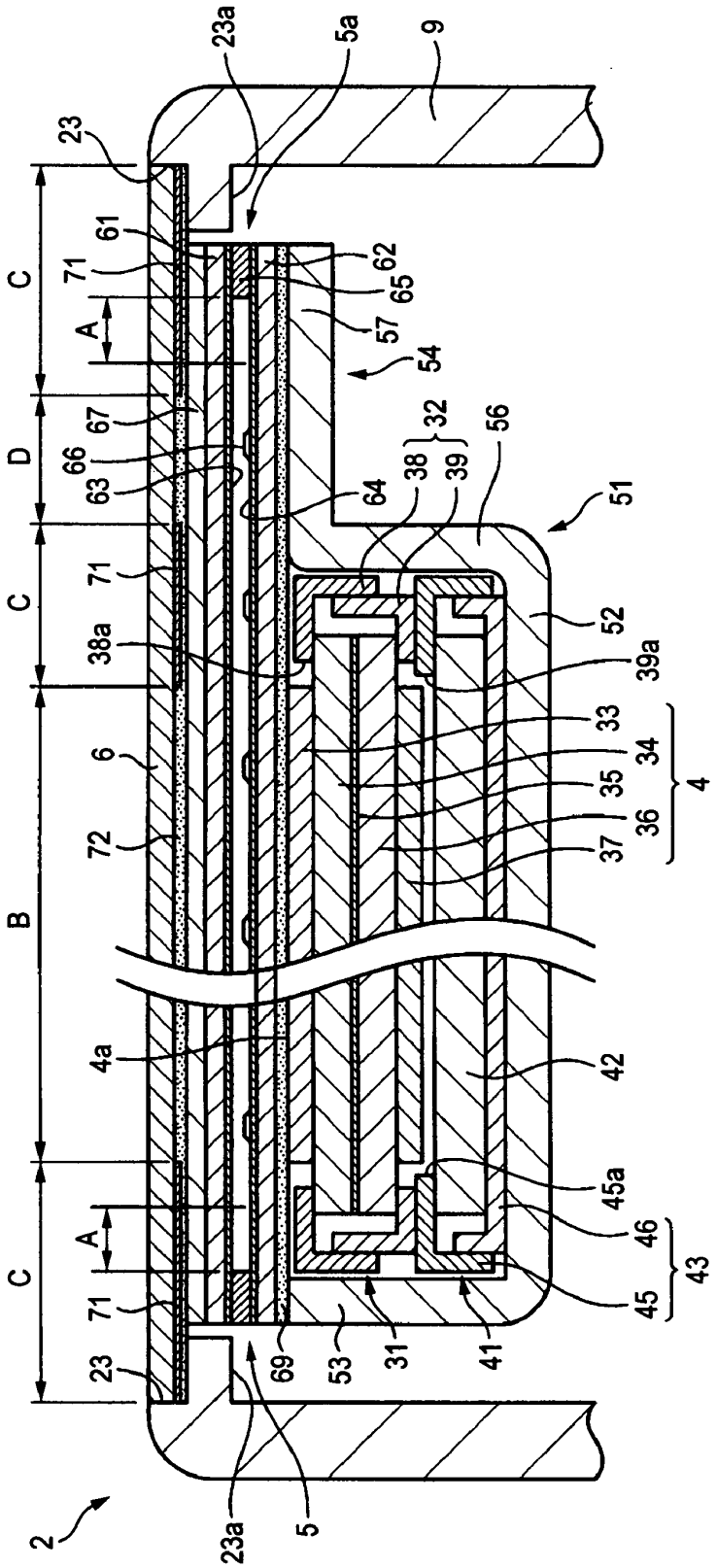

BOE Ex. 1023, p. 5
BOE v. Paneltouch
IPR2025-01482

FIG. 5

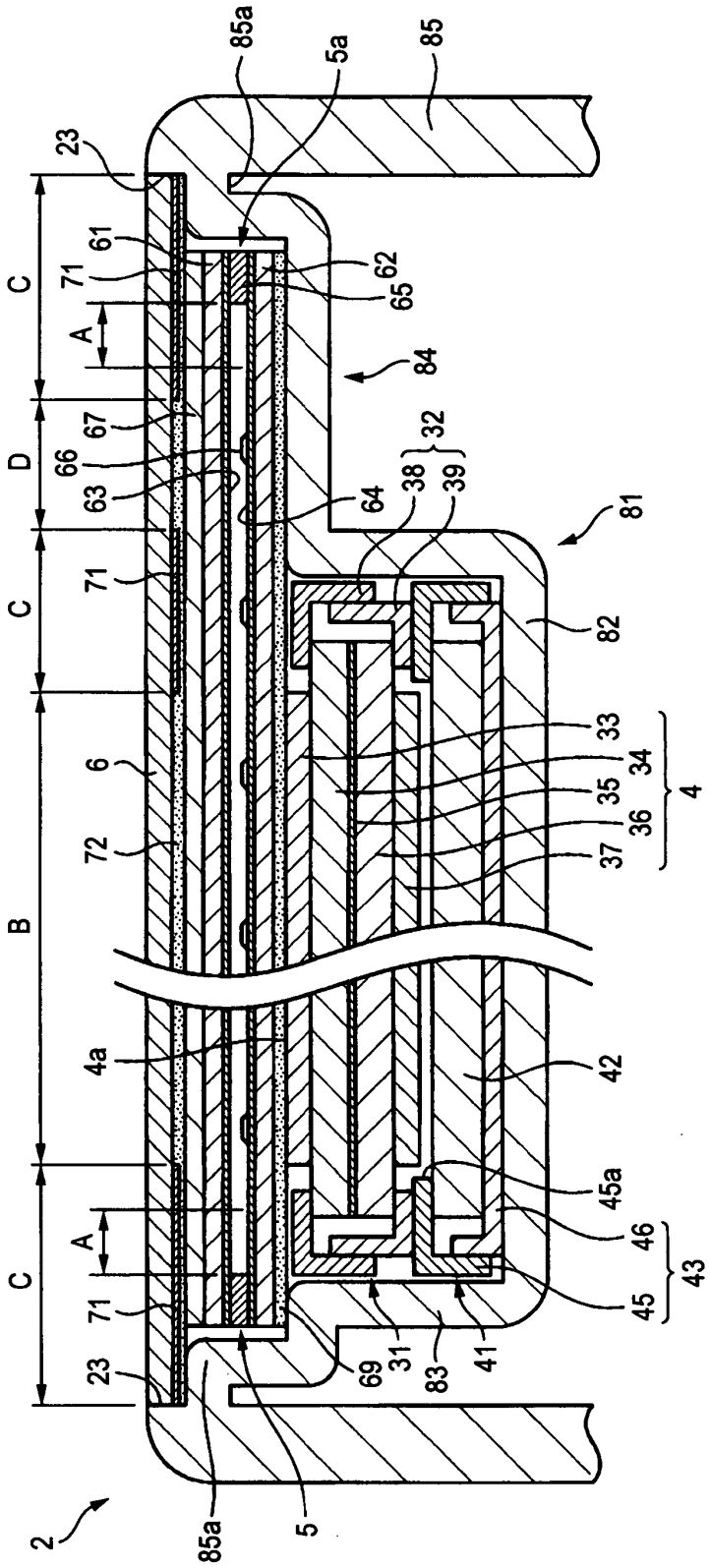

BOE Ex. 1023, p. 6
BOE v. Paneltouch
IPR2025-01482

FIG. 6

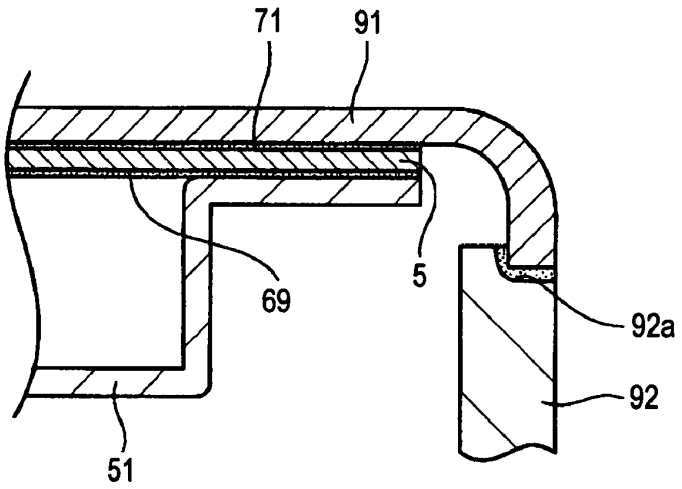
71
91
69
5
92a
92
51

FIG. 7

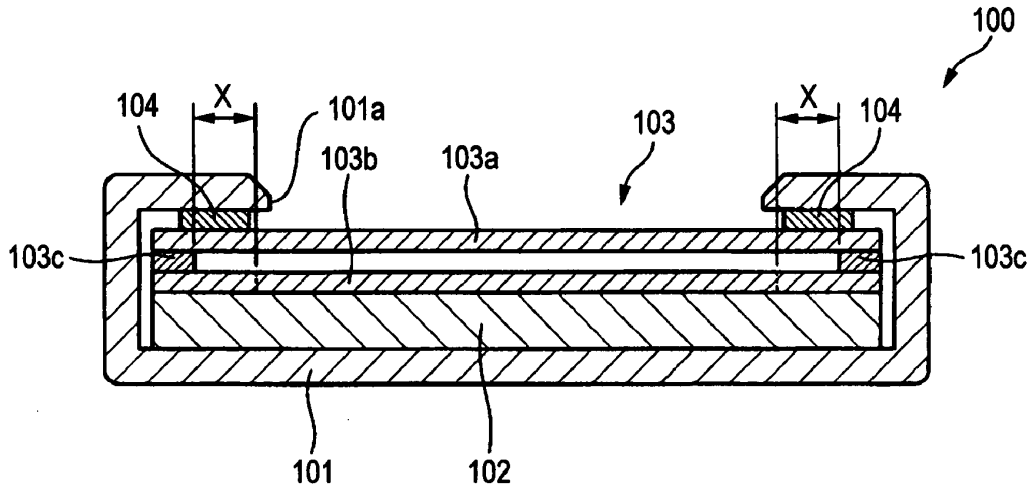
100
104
X
101a
103b
103a
103
X
104
103c
103c
101
102

DISPLAY DEVICE EQUIPPED WITH A TOUCH PANEL

CROSS-REFERENCE TO RELATED APPLICATIONS

[0001] This application claims priority from Japanese Patent Application No. JP 2006-144331 filed in the Japanese Patent Office on May 24, 2006, the entire content of which is incorporated herein by reference.

BACKGROUND OF THE INVENTION

[0002] 1. Technical Field

[0003] The present invention relates to a display device equipped with a touch panel, the display device allowing input operations using a display surface of a display panel by disposing a touch panel on the display surface of the display panel accessible through an opening section of a device housing.

[0004] 2. Related Art

[0005] As a display device equipped with a touch panel of this kind in the related art, there is cited what is described in JP-A-10-73805 (hereinafter referred to as "Patent Document 1"), for example. Patent Document 1 describes what is related to a liquid crystal display device equipped with a liquid crystal panel integrated with a touch panel. The liquid crystal device described in Patent Document 1 is characterized in that "in the liquid crystal display device having a liquid crystal display panel with a transparent touch panel stacked on the display surface side thereof housed in a case with a display window, the case is made support only the touch panel, and the back face of the liquid crystal display panel is made a predetermined length distant from the inside surface of the case."

[0006] According to the liquid crystal display device having such a configuration described in Patent Document 1, an advantage that "the pressing force can be prevented from acting on the liquid crystal display panel in the floating state, and accordingly, the variation in display caused by the pressing force can be prevented from appearing in the liquid crystal display panel (see paragraph [0010])" is expected.

[0007] The touch panel provided to the liquid crystal display device described in Patent Document 1 is a so-called resistive-film touch panel having a pair of film substrates **2***a*, **2***b* each provided with a transparent electrode on the surface facing each other and a spacer **2***c* intervening between the pair of film substrates **2***a*, **2***b*. The resistive-film touch panel is arranged so that the transparent electrode of the film substrate **2***a* touches the transparent electrode of the film substrate **2***b* in response to the film substrate **2***a* being pressed, thus the position of the pressed area is detected to perform an input operation. FIG. **7** shows an example of the display device of the related art equipped with such a resistive-film touch panel.

[0008] The display device **100** shown in FIG. **7** is composed of a device chassis **101** provided with an opening section **101***a*, a display panel **102** housed inside the device chassis **101** and having a display surface accessible through the opening section **101***a*, a touch panel **103** disposed in the display surface of the display panel, a seal member **104** intervening between the touch panel **103** and the device chassis **101**, and so on. Further, the touch panel **103**, which is of the resistive-film, is composed of an upper substrate **103***a* and a lower substrate **103***b* each provided with a transparent conductive film (corresponding to the transparent electrode of the touch panel according to Patent Document 1) on the surface thereof facing each other, bar-like cushion members **103***c* disposed between the peripheries of the upper substrate **103***a* and the lower substrate **103***b*, and so on.

[0009] In such a touch panel **103**, a pressing operation performed on a peripheral area X of the cushion member **103***c* will cause strong force applied on the upper substrate **103***a* taking a corner of the cushion member **103***c* as the fulcrum. In this case, since the transparent conductive film provided to the upper substrate **103***a* is brittle in nature, if the distance from the point on which the pressing operation is performed to the corner of the cushion member **103***c* is short, the transparent conductive film might be broken. Therefore, in the display device **100** of the related art, by covering the area X with the rim of the opening section **101***a* of the device chassis **101**, the pressing operation on the area X has been prevented.

[0010] However, in the display device having such a configuration, since the area X, which might be broken by the pressing operation thereon is covered with the rim of the opening section **101***a* of the device chassis **101**, a step has been caused between the surface of the device main body **101** and the surface of the touch panel **103**. Therefore, the display device easily gets dirty with foreign particles such as dust accumulated in the step section between the device chassis **101** and the touch panel **103**, resulting in problems of a cumbersome work for removing the dirt and of a low visual quality of the appearance thereof, from the view point of design.

SUMMARY OF THE INVENTION

[0011] Therefore, it is desirable to solve the problem that by covering the peripheral section of the touch panel where the transparent electrode might be broken by the pressing operation with the rim of the opening provided to the device chassis, the step is caused between the surface of the device chassis and the surface of the touch panel resulting in the dirtiness with the foreign particles such as dust accumulated in the step section and the low visual quality of the whole device.

[0012] According to an embodiment of the present invention, there is provided a display device equipped with a touch panel, which may include a device chassis provided with an opening section, a display panel having a display surface disposed accessible through the opening section, a touch panel disposed on the display surface of the display panel and capable at least of selecting a function displayed on the display surface in response to a pressing operation on the touch panel, and a surface sheet for covering the touch panel on the opposite side to the display panel, and closing the opening section to form a substantially the same surface with the device chassis, wherein a reinforcing area for improving resistivity against pressing force applied from the outside may be provided in a predetermined range of the surface sheet.

[0013] According to the display device equipped with a touch panel of the embodiment of the invention, by provid-

ing the surface sheet for covering the touch panel disposed on the display panel and for closing the opening section of the device chassis to form a part of the device chassis, one surface of the device chassis through which the display panel provided with the touch panel is accessible may be made planar. As a result, dirtiness with the foreign particles such as dust accumulated in one surface of the device chassis can be prevented, and the visual quality of the whole device can be improved. Moreover, by providing the reinforcing area with improved resistivity against the pressing force applied from the outside in the surface sheet, the concentrated stress can be prevented from locally acting on the touch panel covered with the reinforcing area, thus the breakage of the transparent conductive film of the touch panel can be prevented.

BRIEF DESCRIPTION OF THE DRAWINGS

[0014] FIG. **1** is a perspective view from the front side of a digital still camera (an imaging apparatus) showing a first embodiment of the display device equipped with a touch panel according to the invention.

[0015] FIG. **2** is a perspective view from the rear side of the digital still camera (the imaging apparatus) showing the first embodiment of the display device equipped with a touch panel according to the invention.

[0016] FIG. **3** is an exploded explanatory view separating a touch panel, a surface sheet, and so on from the digital still camera.

[0017] FIG. **4** is a cross-sectional explanatory view of the digital still camera shown in FIG. **1** showing the states of the touch panel, the surface sheet, and so on.

[0018] FIG. **5** is a cross-sectional explanatory view for explaining a digital still camera (an imaging apparatus) showing a second embodiment of the display device equipped with a touch panel according to the invention.

[0019] FIG. **6** is a cross-sectional explanatory view for explaining a digital still camera (an imaging apparatus) showing a third embodiment of the display device equipped with a touch panel according to the invention.

[0020] FIG. **7** is a cross-sectional explanatory view showing a display device equipped with a touch panel according to the related art.

DETAILED DESCRIPTION

[0021] A display device equipped with a touch panel, which can improve the visual quality of the whole device by forming an opening section of a device chassis, which the touch panel is stacked on a display panel accessibly through, as a plane without a step, and can prevent breakage of a transparent conductive film of the touch panel, is realized with a simple configuration.

[0022] FIGS. **1** through **6** are for explaining the embodiments of the invention. Specifically, FIG. **1** is a perspective view from the front side of a digital still camera showing a first embodiment of the display device equipped with a touch panel according to the invention, FIG. **2** is a perspective view from the rear side of the digital still camera shown in FIG. **1**, FIG. **3** is an exploded explanatory view separating a touch panel, a surface sheet, and so on from the digital still camera shown in FIG. **1**, FIG. **4** is a cross-sectional explanatory view of the digital still camera shown in FIG. **1** showing the states of the touch panel, the surface sheet, and so on, FIG. **5** is a cross-sectional explanatory view for explaining a second embodiment of the display device equipped with a touch panel according to the invention, and FIG. **6** is a cross-sectional explanatory view for explaining a third embodiment of the display device equipped with a touch panel according to the invention.

[0023] FIGS. **1** and **2** show a digital still camera **1** applied as the first embodiment of an imaging apparatus showing a specific example of a display device equipped with a touch panel according to the invention. The digital still camera **1** is arranged to use a semiconductor recording medium as an information recording medium, and to be able to convert an optical image from the subject into an electric signal using imaging means such as CCD (a solid-state imaging device) to record it on the semiconductor recording medium, or to display it on a display panel such as a liquid crystal display.

[0024] The digital still camera **1** is configured including a camera case **2** showing a specific example of a device chassis, a lens body tube **3** for acquiring an image of the subject as light and leading the light to an imaging device such as CCD or CMOS as imaging means, a liquid crystal panel **4** showing a specific example of a display panel for displaying an image in accordance with a video signal output from the imaging device, a touch panel **5** disposed on a display surface of the liquid crystal panel **4** and capable of selecting a function, which is displayed on the display surface of the liquid crystal panel **4**, in response to a pressing operation thereon, a surface sheet **6** for covering a surface of the touch panel **5** opposite to the liquid crystal panel **4**, a control device for controlling an operation of the lens body tube **3**, display of the liquid crystal panel **4**, and so on, a battery power supply not shown, and so on.

[0025] The camera case **2** is composed of a front case **7** and a rear case **8** each formed of an elongated flat vessel and overlapped each other in an anteroposterior direction, a center case **9** formed of a substantially rectangular frame intervening between the front case **7** and the rear case **8**, and so on. Inside the camera case **2**, there is housed a control device for driving and controlling the lens body tube **3**, the liquid crystal panel **4**, and so on. The control device is composed of, for example, a wiring board on which a predetermined electric circuit is formed by a printing formation method or the like, electronic components such as a microcomputer, resistors, or capacitors mounted at predetermined positions on the wiring board, and so on.

[0026] A decorative ring **10** is attached to the front case **7** on the front surface at a position a little bit shifted from the center thereof, and the lens body tube **3** is provided movably in a back and forth direction through a center hole of the decorative ring **10**. The lens body tube **3** is a so-called retractable lens which has a configuration capable of expanding and contracting in a nested manner, and is retracted inside the camera case **2** when shooting is not performed. It is arranged that the front surface of the lens body tube **3** in a field lens **3**A side forms substantially the same plane with the front surface of the front case **7** when the lens body tube **3** is retracted.

[0027] The front case **7** is provided with a light emitting section **12** of a flash unit and a light emitting/receiving section **13** of an automatic focus mechanism at obliquely

upward positions of the lens body tube **3**. Further, on the upper surface of the center case **9**, there are provided a power button **15**, a shutter release button **16**, sound collecting holes **17** of a sound collecting device such as a microphone, and so on. Further, on one side surface of the center case **9**, there is provided a battery storage section for detachably storing a battery as a power source, and the battery storage section is provided with a battery lid **18** detachably attached thereto. Further, on the opposite side section of the center case **9** to the battery lid **18**, there are provided speaker holes **19** for a speaker unit.

[**0028**] On a side section of the rear case **8** in the width direction, there is provided a mode selection switch **21** for selecting a functional mode (e.g., a still image mode, a movie mode, or a play back mode). Further, as shown in FIGS. **3** and **4**, an opening section **23** is provided to the rear case **8** so as to open a substantially entire area of the rear face of the camera case **2**. In the inside of the camera case **2** accessible through the opening section **23**, there are provided a liquid crystal panel assembly **31** having the liquid crystal panel **4**, a backlight assembly **41** disposed behind the liquid crystal panel assembly **31**, a support member **51** for supporting the backlight assembly **41** and the liquid crystal panel assembly **31**, and the touch panel **5** disposed and stacked on a display surface **4***a* of the liquid crystal panel **4**. Further, on the opposite side of the touch panel **5** to the liquid crystal panel **4**, there is provided the surface sheet **6** for covering the touch panel **5** and at the same time sealing the opening section **23**.

[**0029**] The liquid crystal panel assembly **31** is composed of the liquid crystal panel **4**, a panel frame **32** for holding the liquid crystal panel **4**, and so on. The liquid crystal panel **4** has a elongated rectangular plane shape, and is composed of an upper polarization plate **33**, an upper glass plate **34**, a liquid crystal layer **35**, a lower glass plate **36**, and a lower polarization plate **37** stacked in this order from the side of the opening section **23** of the rear case **8**. The upper polarization plate **33** and the lower polarization plate **37** of the liquid crystal panel **4** are for aligning the vibration of light passing therethrough to one direction to control the light intensity. The upper and lower polarization plates **33**, **37** are arranged to be smaller than the upper and lower glass plates **34**, **36** and are disposed through openings **38***a*, **39***a* of the panel frame **32** described later, respectively. Further, the surface of the upper polarization plate **33** forms the display surface **4***a* of the liquid crystal panel **4**.

[**0030**] The panel frame **32** is formed of a combination of an outer frame **38** discretely formed as a separated member and an inner frame **39** formed to be a little bit smaller than the outer frame **38**. Specifically, the outer frame **38** and the inner frame **39** are formed of rectangular frames having rectangular opening sections **38***a*, **39***a* with sizes corresponding to the upper and lower polarization plates **33**, **37**, respectively, and the panel frame **32** is composed integrally by combining the inside edge of the outer frame **38** and the outside edge **39** of the inner frame **39**.

[**0031**] The both inside edges of the shorter sides of the outer frame **38** are each provided with an engaging protrusion not shown, and the both outside edges of the shorter sides of the inner frame **39** are each provided with an engaging recess to be engaged with the corresponding engaging protrusion of the outer frame **38**. The engaging protrusions and the engaging recesses are arranged to be respectively engaged with each other when the inside edge of the outer frame **38** and the outside edge of the inner frame **39** are overlapped each other, thus the outer frame **38** and the inner frame **39** are reliably fixed to each other and configured integrally.

[**0032**] As shown in FIG. **3**, on one side face of the longer sides of the outer frame **38**, there is provided a notch **38***b* opening downward. Further, on one side face of the inner frame **39** opposing to the one side face of the outer frame **38**, there is provided a notch **39***b* opening upward corresponding to the notch **38***b* of the outer frame **38**. The notches **38***b*, **39***b* form a through hole on the side face of the panel frame **32** assembled integrally with the outer frame **38** and the inner frame **39**. Further, the through hole of the panel frame **32** is provided with a flexible wiring board **25***a* connected therethrough to the liquid crystal panel **4**.

[**0033**] Although in the present embodiment the configuration of providing the engaging protrusions on the inside edge of the outer frame **38**, and providing the engaging recesses on the outside edge of the inner frame **39** is adopted, it is obvious that a reversed configuration of providing the engaging recesses on the inside edge of the outer frame **38**, and providing the engaging protrusions on the outside edge of the inner frame **39** can also be adopted. Further, the panel frame **32** can also be integrally configured by fixing the outer frame **38** and the inner frame **39** with fixing means such as a plurality of fixing screws or an adhesive.

[**0034**] The backlight assembly **41** is composed of a backlight main body **42**, a light frame **43** for holding the backlight main body **42**, and so on. The backlight main body **42** is light source means for supplying the liquid crystal panel **4** with light, and has a plane shape with substantially the same size as the liquid crystal panel **4**. As the backlight main body **42**, for example, a so-called light emitting diode (LED) backlight using a white LED as the light source, a so-called electroluminescence (EL) backlight using an EL light emitter as the light source, and so on can be cited.

[**0035**] Similarly to the panel frame **32**, the light frame **43** is composed of a combination of an outer frame **45** discretely formed as a separated member and an inner frame **46** formed to be a little bit smaller than the outer frame **45**, and the size is arranged to be substantially the same as the panel frame **32**. The outer frame **45** of the light frame **43** forms a rectangular frame having an opening section **45***a* for exposing the backlight main body **42**, and the inner frame **46** forms a chassis with the upper side open. Further, by combining the inside edge of the outer frame **45** and the side face of the inner frame **46**, the light frame **43** is integrally configured.

[**0036**] Similarly to the outer frame **38** of the panel frame **32**, on both of the inside edges of the shorter sides of the outer frame **45**, there are provided engaging protrusions not shown, respectively. Further, on both of the outside edges of the shorter sides of the inner frame **46**, there are provided engaging recesses not shown, respectively, to be engaged with the engaging protrusions of the outer frame **45**, similarly to the inner frame **39** of the panel frame **32**. The engaging protrusions and the engaging recesses are arranged to be respectively engaged with each other when the inside edge of the outer frame **45** and the outside edge of the inner

frame **46** are overlapped each other, thus the outer frame **45** and the inner frame **46** are reliably fixed to each other and configured integrally.

[**0037**] Further, on one side face of the shorter sides of the outer frame **45**, there is provided a notch **45***b* opening downward. Further, although not shown in the drawings, on one side face of the inner frame **46** corresponding to the one side face of the outer frame **45**, there is provided a notch opening upward so as to correspond to the notch **45***b* of the outer frame **45**. It is arranged that a through hole is provided to the side face of the light frame **43** with the notch of the inner frame **46** and the notch **45***b* of the outer frame **45**. The through hole of the light frame **43** is provided with a flexible wiring board **25***b* connected therethrough to the backlight main body **42**.

[**0038**] The liquid crystal panel assembly **31** and the backlight assembly **41** are supported by the support member **51** in the condition in which the backlight assembly **41** is stacked on the rear side of the liquid crystal panel assembly **31**. The support member **51** is composed of a substantially rectangular base plate **52** on which the liquid crystal panel assembly **31** and the backlight assembly **41** stacked one another are mounted, a plurality of holding segments **53** extending substantially perpendicular to the base plate **52** and continuously to the three sides thereof, a support section **54** provided continuously to the remaining side of the base plate **52** and for supporting an expanded section **5***a* of the touch panel **5** described later, and so on.

[**0039**] The base plate **52** of the support member **51** is arranged to have a size compatible with the liquid crystal panel assembly **31** and the backlight assembly **41**. Further, by attaching the base plate **52** on a fixing section not shown of the center case **9** with fixing means such as fixing screws, the support member **51** is fixed inside the camera case **2**.

[**0040**] In the present embodiment, five holding segments are provided as the plurality of holding segments **53** of the support member **51**, and two of them are disposed in the middle of each of the two longer sides of the base plate **52** with an appropriate distance and one is disposed in the middle of a shorter side thereof. These five holding segments **53** are for holding the liquid crystal panel assembly **31** and the backlight assembly **41** by pinching the sides thereof, and are arranged to have lengths equal to the height of the stack of the both assemblies **31**, **41**.

[**0041**] The support section **54** of the support member **51** is composed of a rising segment **56** extending substantially vertically and continuously from the opposing short side to the one short side provided with the holding segment **53**, and an expansion segment **57** expanded in a parallel direction to the base plate **52** continuously to the rising segment **56** and for mounting the expanded section **5***a* of the touch panel **5**. Although not shown in the drawings, the rising segment **56** of the support section **54** is provided with a through hole for allowing a flexible wiring board **28***b* connected to the backlight main body **42** be inserted therethrough. The expanded segment **57** of the support section **54** has a substantially rectangular shape with a size compatible with the expanded section **5***a* of the touch panel **5**, and the upper surface thereof is arranged to have the same height as that of the upper surface of the liquid crystal panel assembly **31** supported by the support member **51**, namely the display surface **4***a* of the liquid crystal panel **4**.

[**0042**] The touch panel **5** has an elongated rectangular planar shape, and is configured including an upper film member **61**, a lower film member **62** opposing to the upper film member **61**, an upper transparent conductive film **63** and a lower transparent conductive film **64** respectively disposed on the surfaces of the film members **61**, **62** opposing to each other, a cushion member **65** intervening between both of the film members **61**, **62**, a dot spacer **66** for preventing short circuit between the upper transparent conductive film **63** and the lower transparent conductive film **64** while no pressing (touch) operation is performed, a polarization plate **67** disposed on the opposite side of the upper film member **61** to the lower film member **62**, and so on as shown in FIG. **4**.

[**0043**] As the material of the upper film member **61** and the lower film member **62**, polyethylene terephthalate (PET) can be cited, but is not limited thereto. It is obvious that various kinds of materials used for this kind of film member such as polycarbonate (PC), polyethersulfone (PES), orpolyarylate (PAR) can also be used therefor. Further, the upper transparent conductive film **63** and the lower transparent conductive film **64** are members capable of conducting light and electricity, and indium tin oxide (ITO), which is typically used for this kind of touch panel, is applied thereto in the present embodiment.

[**0044**] The upper and lower surfaces of the cushion member **65** are adhered to the upper film member **61** and the lower film member **62** with adhesion means such as an adhesive and an adhesive tape, thus a microscopic gap is formed between the upper and the lower film members **61**, **62**. As the material of the cushion member **65**, an insulating elastic body such as rubber is preferably used. It is obvious, however, that various materials applied to this kind of cushion member such as flexible plastic or other materials can also be used therefor.

[**0045**] A pressing (touch) operation within a predetermined area inner than the cushion member **65** of the touch panel **5** causes strong force applied to the upper film member **61** pivoting around the inside corner section of the cushion member **65**. Further, the upper transparent conductive film **63**, which is brittle in nature, disposed on the upper film member **61** might be broken. In other words, the touch panel **5** includes a conductive film breakage occurring area A where the upper transparent conductive film **63** might be broken by a pressing operation, as shown in FIG. **4**. This conductive film breakage occurring area A is covered by a reinforcing area C of the surface sheet **6** described later.

[**0046**] As shown in FIG. **3**, the touch panel **5** is arranged to have a longer sides longer than the liquid crystal panel assembly **31**, thus one of the shorter sides thereof protrudes from the outside edge of the liquid crystal panel assembly **31** to form the expanded section **5***a*. Further, the expanded section **5***a* of the touch panel **5** is provided with a plurality of input sections. The plurality of input sections is a switch mechanism utilizing the touch panel function, and it is arranged that various inputs to the digital still camera **1** are performed in response to a pressing operation on the switch mechanism.

[**0047**] As the plurality of input sections of the expanded section **5***a*, there are provided a zoom input section **68***a* for performing a zoom operation, a menu input section **68***b* for selecting various menus, and a display switching input

section **68***c* for switching the screen display. These input sections **68***a* through **68***c* face an input section operation area D of the surface sheet **6** described later. Further, as another example of the plurality of input sections, there are cited a direction operation input section for moving a cursor or the like for selecting items from a menu, a screen operation input section for performing switching of the screen sizes or deletion of the screen, and so on.

[**0048**] As shown in FIG. **4**, the touch panel **5** is fixed by bonding to the display surface **4***a* of the liquid crystal panel **4** and the expanded segment **57** of the support member **51** with an adhesive **69**. The adhesive **69** is liquid-tightly filled in at least between the touch panel **5** and the display surface **4***a* of the liquid crystal panel **4**, thus preventing an air layer from intervening between the touch panel **5** and the display surface **4***a* of the liquid crystal panel **4** to avoid increase in the optical interfacial reflection.

[**0049**] As shown in FIG. **3** and other drawings, the surface sheet **6** has an elongated rectangular plane shape arranged to have a size compatible with the opening section **23** of the rear case **8**, and arranged to seal the opening section **23**, and at the same time, to form substantially the same plane with the rear case **8**. The surface sheet **6** is formed of a transparent synthetic resin, which can be distorted to the extent that a pressing operation can be performed on the touch panel **5**. As the surface sheet **6**, an acrylic resin with a thickness arranged in a range of about 0.2 mm through 0.5 mm is preferable. Other synthetic resins such as polycarbonate can also be used with a thickness arranged so that the resin can be distorted to the extent that a pressing operation can be performed on the touch panel **5**.

[**0050**] The surface sheet **6** is provided with a display surface operating area B facing the display surface **4***a* of the liquid crystal panel **4** via the touch panel **5**, a reinforcing area C provided to substantially the entire area in a range from the outside edge of the surface sheet **6** to the display surface operating area B and for covering the conductive film breakage occurring area A of the touch panel **5**, and an input section operating area D facing each of the input sections **68***a* through **68***c* of the touch panel **5**.

[**0051**] The display surface operating area B of the surface sheet **6** is an area of the transparent synthetic resin used as the surface sheet without any modifications, through which the display surface **4***a* of the liquid crystal panel **4** can be viewed, and can be distorted to the extent that the pressing operation can be performed on the touch panel **5**. The display surface operating area B can be made a little bit, for example, about 0.3 mm outer from the periphery of the display surface **4***a*, larger than the display surface **4***a* of the liquid crystal panel **4**. The meaning of 0.3 mm mentioned here is as follows.

[**0052**] This is size setting for preventing an opaque area (the reinforcing area C) extending outside the display surface operating area B of the surface sheet **6** from covering the display surface **4***a* of the liquid crystal panel **4**. By the offset value, the dimensional tolerance of the display surface operating area B in the surface sheet **6**, the dimensional tolerance of the display surface **4***a* in the liquid crystal panel **4**, the bonding tolerance between the surface sheet **6** and the liquid crystal panel **4**, and so on can be absorbed, thus preventing the reinforcing area C from covering the display surface **4***a*. Further, outside the display surface of the liquid crystal panel **4**, there is provided a so-called black mask formed as an area only for displaying black color. Therefore, even if the outer area of the display surface **4***a* is positioned adjacent to the frame of the display surface operating area B, which is the transparent area of the surface sheet **6** due to the bonding variation by the bonding tolerance described above, the area looks pure black. Thus, it is arranged that the inside of the camera case **2** cannot be seen from the area adjacent to the frame of the display surface operating area B.

[**0053**] The reinforcing area C is formed by executing a serigraph **71** showing a specific example of coating on an opposite surface of the surface sheet **6** to the touch panel **5**. Therefore, the reinforcing area C becomes an opaque layer, which blocks the light visible to the human, and it is arranged that the inside of the camera case **2** cannot be seen through the reinforcing area C. Thus, the reinforcing area C covers the conductive film breakage occurring area A, and at the same time, clarifies the boundary with the display surface operating area B.

[**0054**] As the coating material for the serigraph **71**, a coating material for enhancing rigidity is used. This is for enhancing rigidity of the reinforcing area C to be higher than that of other areas, thus improving the resistivity of the reinforcing area C against the pressing force applied from the outside. In other words, the reinforcing area C is arranged not to be distorted to the extent that the pressing operation is performed on the touch panel **5** beneath the reinforcing area C. Thus, even if the pressure is applied to the reinforcing area C, the upper transparent conductive film **63** in the conductive film breakage occurring area A can surely be prevented from being broken. It should be noted that as the coating material for enhancing rigidity, a resin coating materials with high rigidity (e.g., resin paints containing metal) can be cited, but these are not limitations, and aluminum, silver, or the like can also be used. Further, it is also possible to arrange the color of the coating material to be the same as the camera case **2** to show as if the reinforcing area C is a part of the camera case **2**.

[**0055**] Although in the present embodiment the reinforcing area C is formed by coating the coating material for enhancing the rigidity on the surface sheet **6**, the formation of the reinforcing area C is not limited thereto. For example, the reinforcing area C can be formed by adhering a material with high rigidity such as a metal foil, hardened plastic, or the like to the surface sheet **6**, or performing a plating process thereon.

[**0056**] The input section operating area D is composed of a zoom input operating area D**1** facing a zoom input section **68***a* provided to the expanded section **5***a* of the touch panel **5**, a menu input section operating area D**2** facing the menu input section **68***b*, and a display switching input section operating area D**3** facing the display switching input section **68***c*. Each of the input section operating areas D**1** through D**3** is, as is the case with the display surface operating area B, formed of the transparent synthetic resin without any modifications, and can be distorted to the extent that pressing operations can be executed on each of the input sections **68***a* through **68***c* of the touch panel **5**.

[**0057**] The input section operating areas D**1** through D**3** of the surface sheet **6** and the respective input sections **68***a* through **68***c* provided to the expanded section **5***a* of the touch panel **5** form various kinds of operation switches such

as the menu operation switch or the display selection switch. These operation switches are provided instead of typically used mechanical tact switches, thereby reducing the number of components in comparison with the case of using the tact switches. Further, the face of the camera case **2** on which the liquid crystal panel **4** is disposed can be made as a single plane throughout the entire surface, thus the appearance of the whole digital still camera **1** can be improved.

[**0058**] Further, it is preferable that in order for making the user recognize that the various kinds of operation switches are formed by the respective input section operating areas D**1** through D**3** and respective input sections **68***a* through **68***c*, the surface of the input section operating areas D**1** through D**3** facing the touch panel is provided with marks by printing or coating with different color from the color of the reinforcing area C for identification. As the printing or the coating in this case, hot stamp or serigraph, as is the case with the reinforcing area C can be cited. It should be noted that as the coating material of the coating provided to the input section operating areas D**1** through D**3**, a material with low rigidity is used to arrange that the input section operating areas D**1** through D**3** can be distorted to the extent that pressing operations can be performed on each of input sections **68***a* through **68***c*.

[**0059**] As shown in FIG. **4**, the surface sheet **6** is fixed to a sheet fixing section **23***a* provided on the periphery of the opening section **23** of the rear case **8** and the opposite surface of the touch panel **5** to the liquid crystal panel **4** with an adhesive **72**. This adhesive **72** is filled in at least between the surface sheet **6** and the touch panel **5** in a liquid-tight manner to prevent the air layer from intervening between the surface sheet **6** and the touch panel **5**, thereby preventing increase in the optical interfacial reflection.

[**0060**] According to the digital still camera **1** provided with such a configuration, shooting can be performed as follows, for example. Firstly, the digital still camera **1** is powered on by pushing the power button **15**. Then, the still image mode is selected by the mode selection switch **21**. Then, the menu operation switch composed of the menu input section **68***b* and the menu input section operating area D**2** is pushed. Thus, the selection menu for performing settings of shutter speed, aperture, exposure, and so on is displayed on the display surface **4***a* of the liquid crystal panel **4**.

[**0061**] Subsequently, the settings of shutter speed, aperture, exposure, and so on are performed by pressing the selection menu displayed on the display surface **4***a* of the liquid crystal panel **4**. Specifically, the pressing operation is performed on the touch panel **5** overlapped on the display surface **4***a* of the liquid crystal panel **4** by pressing the display surface operating area B of the surface sheet **6** facing the display surface **4***a* of the liquid crystal panel **4**, thus inputting settings of the shutter speed and so on.

[**0062**] In this case, since the display surface operating area B of the surface sheet **6** is arranged to be distorted to the extent that the pressing operation can be performed on the touch panel **5**, the pressing operation can reliably be performed on the touch panel **5**, thus the settings of the shutter speed and so on can be input. Further, the reinforcing area C of the display panel **6**, which is increased in resistivity against the pressing force applied from the outside by providing the serigraph **71**, is not distorted to the extent that the pressing operation is performed on the touch panel **5** beneath the reinforcing area C. Thus, the concentrated stress can be prevented from acting on the conductive film breakage occurring area A covered by the reinforcing area C, thereby eliminating the concern that the upper transparent conductive film **63** of the touch panel **5** might be broken.

[**0063**] After finishing the settings of the shutter speed and so on, an image of the subject acquired by the lens body frame **3** is displayed on the display surface **4***a* of the liquid crystal panel **4**. After then, by pushing the shutter button, a still image can be shot.

[**0064**] FIG. **5** is a cross-sectional explanatory view for explaining a second embodiment of the display device equipped with a touch panel according to the invention. The second embodiment has the support member formed integrally with the rear case, and has the only difference from the first embodiment in the support member **81**. Therefore, only the support member **81** will be explained here, and the portions common to the first embodiment are denoted with the same reference numerals, and duplicated explanations will be omitted.

[**0065**] As is the case with the support member **51** of the first embodiment, the support member **81** is provided with a base plate **82**, a plurality of holding segments **83**, and a support section **84**. Further, an opposite end portion of each of the plurality of holding segments **83** to the base plate **82** and an opposite end portion of the support section **84** to the base plate **82** are formed continuously to a sheet fixing section **85***a* of the rear case **85**. In this case, the operation of fixing the support member **81** to the center case **9** can be eliminated, thus making it possible to reduce man-hour.

[**0066**] FIG. **6** is a cross-sectional explanatory view for explaining a third embodiment of the display device equipped with a touch panel according to the invention. The digital still camera **90** of the second embodiment has a configuration of closing the opening section of the rear case with the surface sheet having a shape with protruding periphery, and the differences of the third embodiment from the first embodiment are the shapes of the surface sheet **91** and the rear case **92**. Therefore, only the surface sheet **91** and the rear case **92** will be explained here, and the portions common to the first embodiment are denoted with the same reference numerals, and duplicated explanations will be omitted.

[**0067**] As shown in FIG. **6**, the surface sheet **91** is formed to have a vessel-like shape with the protruding periphery. The rear case **92** to which the surface sheet **91** is fixed is provided with a sheet fixing section **92***a* on the side face thereof. Further, the surface sheet **91** is fixed to the sheet fixing section **92***a* of the rear case **92** and the touch panel **5** with the adhesive **72**. By adopting such a configuration of fixing the surface sheet **91** by the side face of the rear case **92**, it becomes possible to make the joint between the rear case **92** and the surface sheet **91** invisible from the surface of the digital still camera **90**, to which the opening section **23** is provided, thus further improving the visual quality of the appearance.

[**0068**] Although the first through third embodiments described above have a configuration of using the liquid crystal panel as a specific example of the display panel, the display panel according to the invention is not limited thereto, but an organic EL panel or the like can also be used as the display panel. It should be noted that the backlight assembly **41** disposed behind the liquid crystal panel **4** can be eliminated if the organic EL panel is used.

[**0069**] Further, although in the first through third embodiments described above, the various kinds of operation

switches are composed of the input section **68***a* through **68***c* of the touch panel **5** and the input section operating areas D**1** through D**3** of the surface sheet **6**, thereby disposing the various kinds of operation switches on an area other than the display surface **4***a* of the liquid crystal panel **4**, the various kinds of operation switches can be disposed on an area overlapping the display surface **4***a* of the liquid crystal panel **4**. In this case, the input sections **68***a* through **68***c* are disposed on appropriate positions in the touch panel **5** facing the display surface **4***a* of the liquid crystal panel **4**, for example, on the positions facing the peripheral section of the display surface **4***a*, and further the display surface operating area B of the surface sheet **6** is provided with printing or the like indicating the positions of the input sections **68***a* through **68***c*. Thus, the size of the liquid crystal panel **4** can be increased, and the display surface **4***a* thereof can be enlarged.

[**0070**] As explained hereinabove, according to the imaging apparatus showing a specific example of a display device equipped with a touch panel according to the invention, one surface of the device chassis through which the display panel provided with the touch panel is accessible can be formed as a plane, thus improving the visual quality of the whole apparatus, and preventing the dirtiness with the foreign particles such as dust accumulated in the one surface of the device chassis. Moreover, by providing the reinforcing area in the surface sheet, the concentrated stress caused by the pressing operation can be prevented from locally acting on the touch panel, thus the breakage of the transparent conductive film of the touch panel can be prevented.

[**0071**] Further, since the touch panel is provided with an expanded section protruding outward from the periphery of the display panel, and the expanded section is provided with various kinds of input sections, thus forming the operation switches for performing various kinds of inputs by pressing (touch) operations, the surface of the device through which the display panel can be accessed can be made as a single plane throughout the entire surface, thus the visual quality of the whole device can be made extremely preferable. Still further, since the a support section for supporting the expanded section of the touch panel is provided, the touch panel can be prevented from being distorted by its own weight or the pressing force applied to the expanded section, thus the switch mechanism provided on the expanded section can reliably be operated.

[**0072**] The invention is not limited to the embodiments described hereinabove and shown in the drawings, but can be put into practice in a variously modified manner within the scope of the invention. For example, although the examples applying the digital still camera showing a specific example of an imaging apparatus as a display device equipped with a touch panel are explained in the embodiments, the invention can be applied not only to imaging apparatuses such as digital video cameras, or camera-equipped personal computers, but also to disk recording/reproducing devices, cell-phones, electronic dictionaries, portable game machines, mobile terminal devices, or other display devices equipped with touch panels.

[**0073**] It should be understood by those skilled in the art that various modifications, combinations, sub-combinations and alterations may occur depending on design requirements and other factors insofar as they are within the scope of the appended claims or the equivalents thereof.

1. A display device equipped with a touch panel, comprising:

a device chassis provided with an opening section;

a display panel having a display surface disposed accessible through the opening section;

a touch panel disposed on the display surface of the display panel and capable at least of selecting a function displayed on the display surface in response to a pressing operation on the touch panel; and

a surface sheet for covering the touch panel on the opposite side to the display panel, and closing the opening section to form a substantially the same surface with the device chassis,

wherein a reinforcing area for improving resistivity against pressing force applied from the outside is provided in a predetermined range of the surface sheet.

2. The display device equipped with a touch panel according to claim 1,

wherein the reinforcing area is formed integrally with the surface sheet, continuously along the periphery of the opening section, and in a range formed with a predetermined width from an outer edge of the opening section.

3. The display device equipped with a touch panel according to claim 1,

wherein the reinforcing area is formed as an opaque layer for covering to hide so that the inside of the device chassis becomes invisible.

4. The display device equipped with a touch panel according to claim 1,

wherein the reinforcing area is formed by coating the surface sheet with a coating material for enhancing rigidity.

5. The display device equipped with a touch panel according to claim 1,

wherein the reinforcing area is formed by adhering a material for enhancing rigidity on the surface sheet.

6. The display device equipped with a touch panel according to claim 1,

wherein the touch panel is provided with an expanded section protruding laterally from an outer edge of the display panel, and the expanded section is provided with an input section for the pressing operation, and

a support section for supporting the expanded section is provided inside the device chassis.

7. The display device equipped with a touch panel according to claim 6,

wherein the support section is formed by folding a part of a support member for supporting the display panel.

* * * * *