US 20090231516A1

(19) United States

(12) Patent Application Publication

(10) Pub. No.: US 2009/0231516 A1

(43) Pub. Date: Sep. 17, 2009

Okada et al.

(54) LARGE SUBSTRATE, METHOD OF MANUFACTURING LIQUID CRYSTAL DEVICE FROM THE SAME, AND LIQUID CRYSTAL DEVICE OBTAINED

(76) Inventors: **Kazuhiro Okada**, Saitama (JP); **Katsuyuki Tanaka**, Saitama (JP); **Hiroshi Tsukada**, Saitama (JP)

Correspondence Address:
SMITH, GAMBRELL & RUSSELL, LLP
1850 M Street, N.W., (Suite 800)
Washington, DC 20036 (US)

(21) Appl. No.: 12/225,768

(22) PCT Filed: Mar. 19, 2007

(86) PCT No.: PCT/JP2007/055461

§ 371 (c)(1), (2), (4) Date: Sep. 29, 2008

(30) Foreign Application Priority Data

Mar. 31, 2006 (JP) 2006-096491
Jan. 9, 2007 (JP) 2007-001238

Publication Classification

(51) Int. Cl.
G02F 1/133 (2006.01)
H01J 9/20 (2006.01)

(52) U.S. Cl. 349/73; 445/25

(57) ABSTRACT

A plurality of panels (**40**) are cut from a large substrate (mother substrate) including a lower large substrate (**41**A) and an upper large substrate (**42**A). For each panel (**40**), a frame-shaped seal (**47**) and a connection electrode forming section (C) are formed in the large substrate. Since the left side (**47***c*) of the frame of a panel (**40**) is close to the right side (**47***b*) of the frame of the left-adjacent panel, these sides of the seals are formed from a sealing material containing a lower density of spacers. Since the upper side (**47***a*) of the frame of a panel (**40**) is separated from the lower side (**47***d*) of the frame of the upper adjacent panel (**40**) by an extension (C') for the connection electrodes, these seal members are formed from a sealing material containing a higher density of spacers.

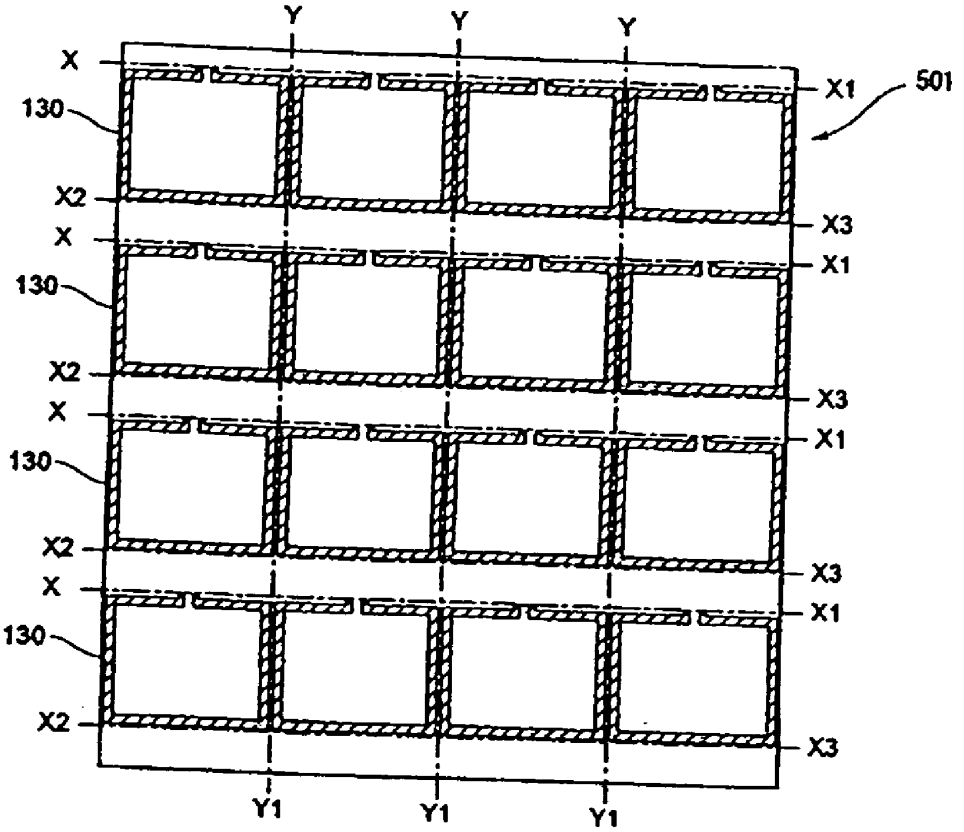

FIG. 1

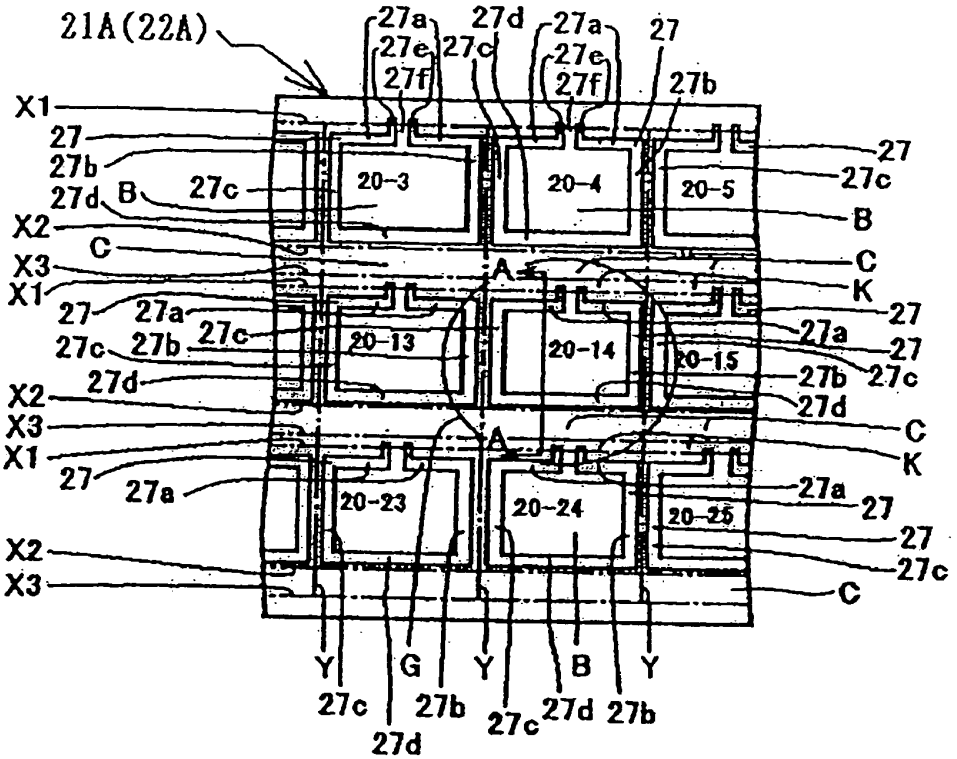
21A(22A)
27a
27d
27e
27c
27f
27
27b
X1
X2
X3
B
C
A
K
20-3
20-4
20-5
20-13
20-14
20-15
20-23
20-24
20-25
Y
G

FIG. 2

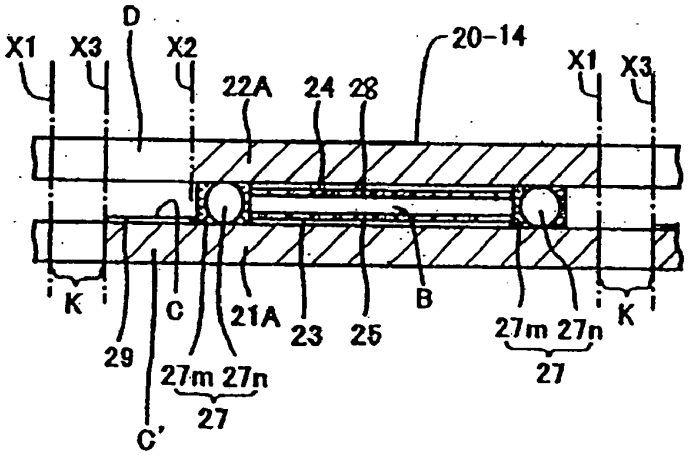
D
X1
X3
X2
20-14
22A
24
28
K
C
21A
23
25
B
29
27m 27n
27
C'

FIG. 3

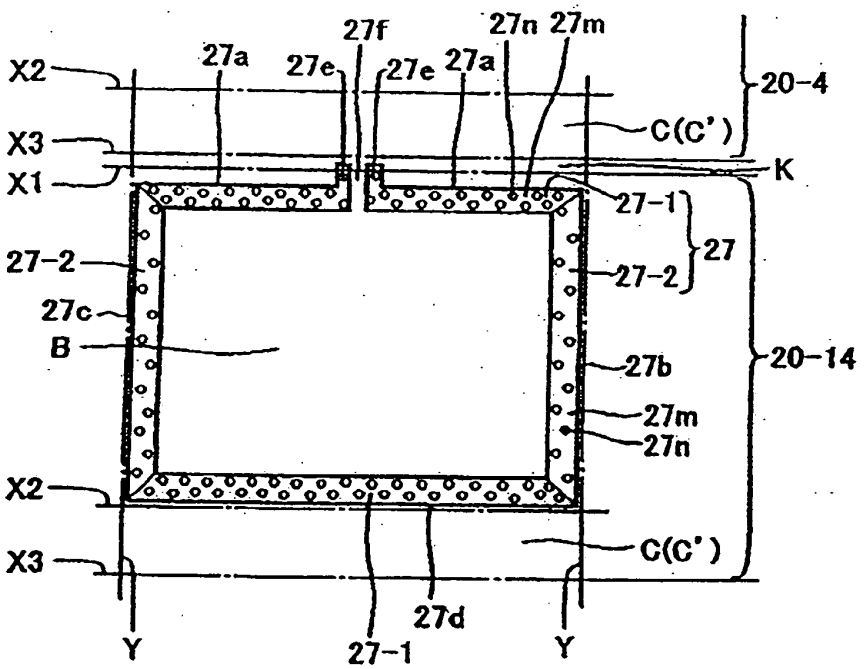
27f
27n
27m
27a
27e
27e
27a
X2
20-4
C(C')
X3
K
X1
27-1
27
27-2
27-2
27c
B
27b
20-14
27m
27n
X2
C(C')
X3
27d
Y
27-1
Y

FIG. 4

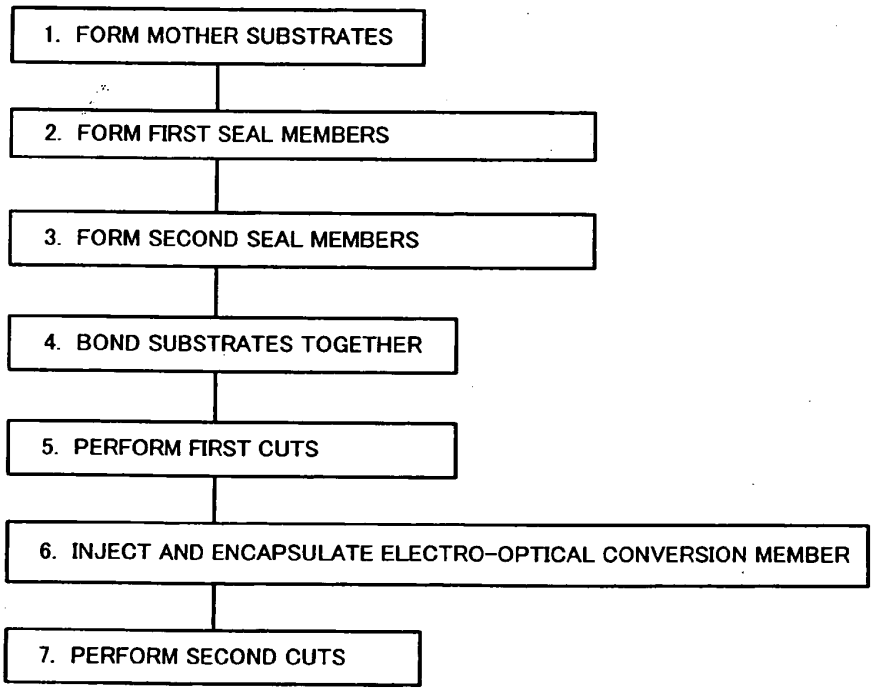
1. FORM MOTHER SUBSTRATES
2. FORM FIRST SEAL MEMBERS
3. FORM SECOND SEAL MEMBERS
4. BOND SUBSTRATES TOGETHER
5. PERFORM FIRST CUTS
6. INJECT AND ENCAPSULATE ELECTRO-OPTICAL CONVERSION MEMBER
7. PERFORM SECOND CUTS

FIG. 5A

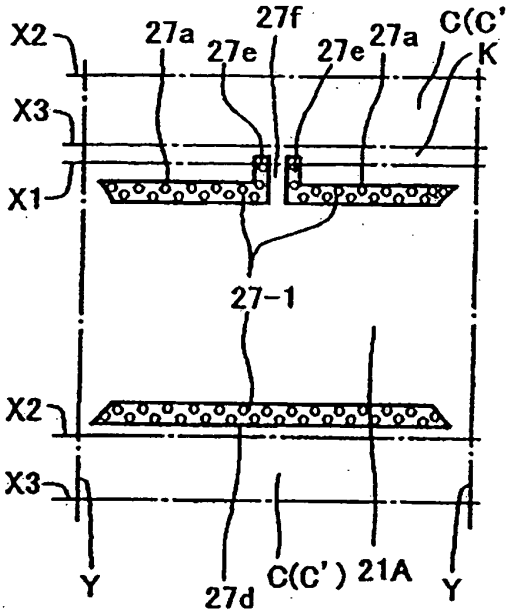

FIG. 5B

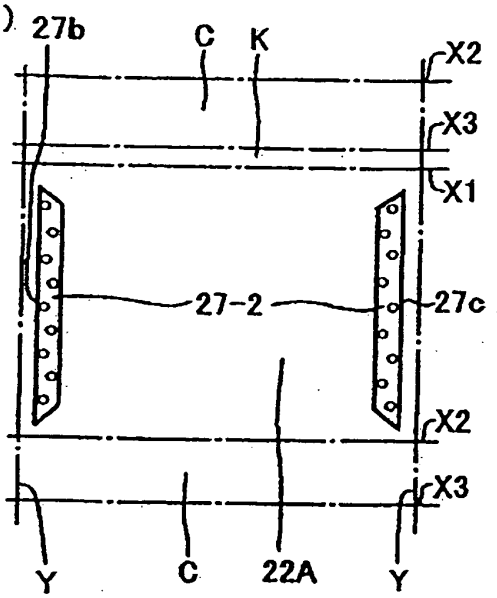

FIG. 6

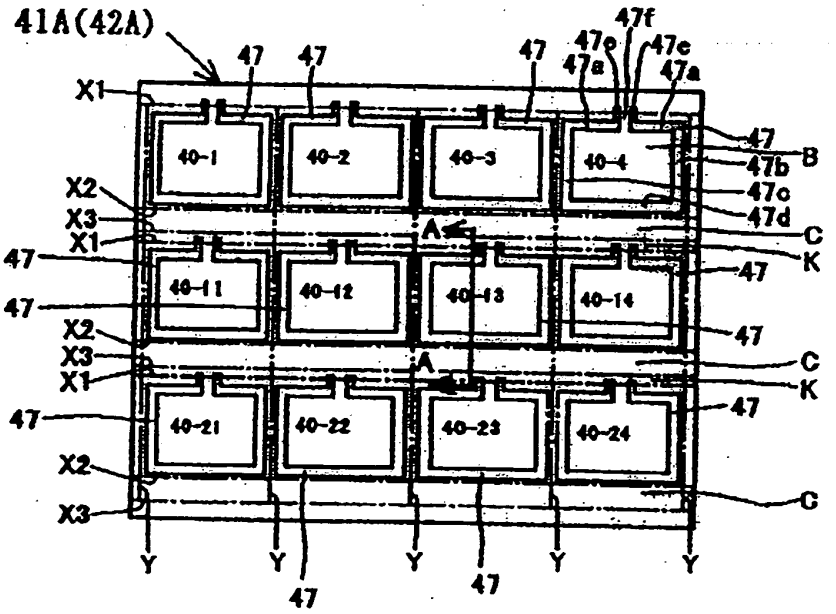

FIG. 7

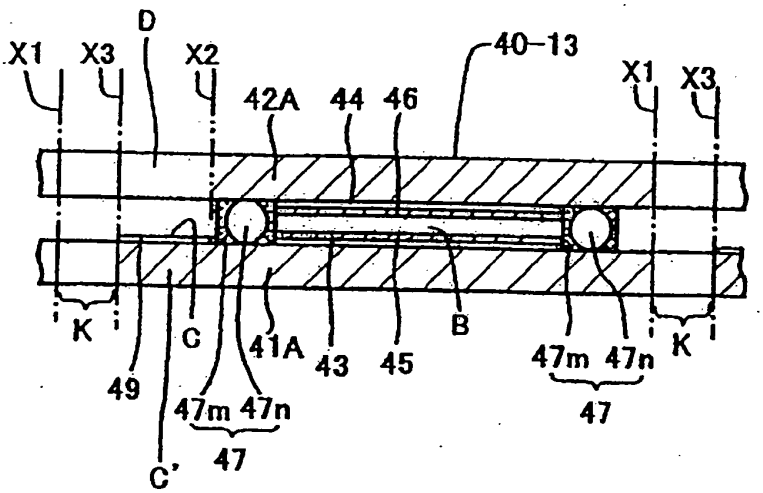
D
X1
X3
X2
40-13
42A
44
46
X1
X3
K
C
41A
43
45
B
47m
47n
K
49
47m
47n
47
47
C'

FIG. 8

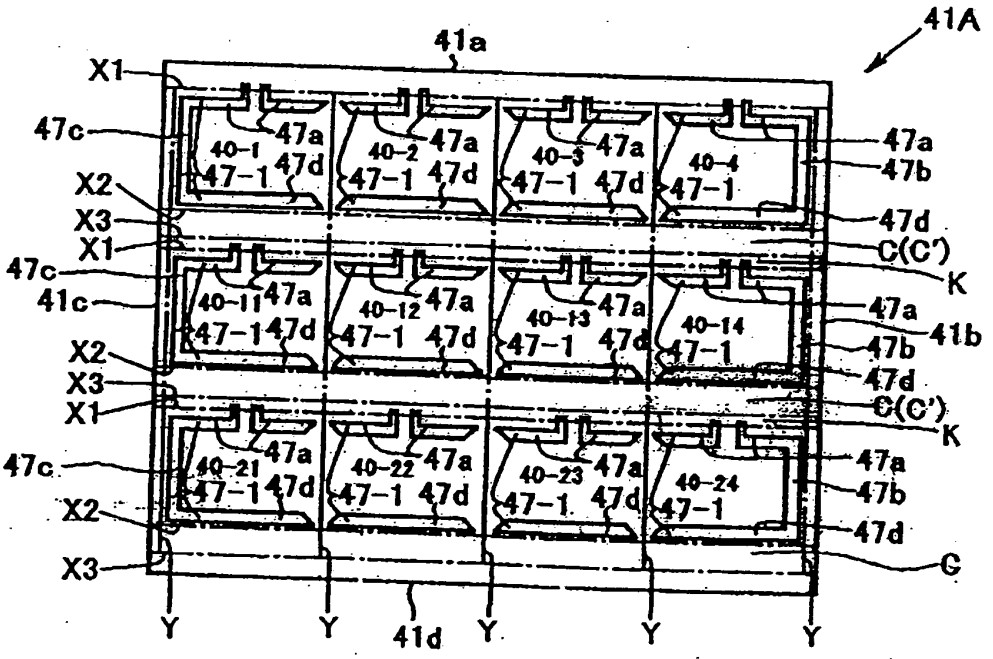
41A
41a
X1
47c
40-1
47a
47-1
47d
40-2
47a
47-1
47d
40-3
47a
47-1
47d
40-4
47-1
47a
47b
X2
X3
X1
47d
C(C')
K
47c
41c
40-11
47a
47-1
47d
40-12
47a
47-1
47d
40-13
47a
47-1
47d
40-14
47-1
47a
41b
47b
X2
X3
X1
47d
C(C')
K
47c
40-21
47a
47-1
47d
40-22
47a
47-1
47d
40-23
47a
47-1
47d
40-24
47-1
47a
47b
X2
47d
X3
C
Y
Y
41d
Y
Y
Y

FIG. 9

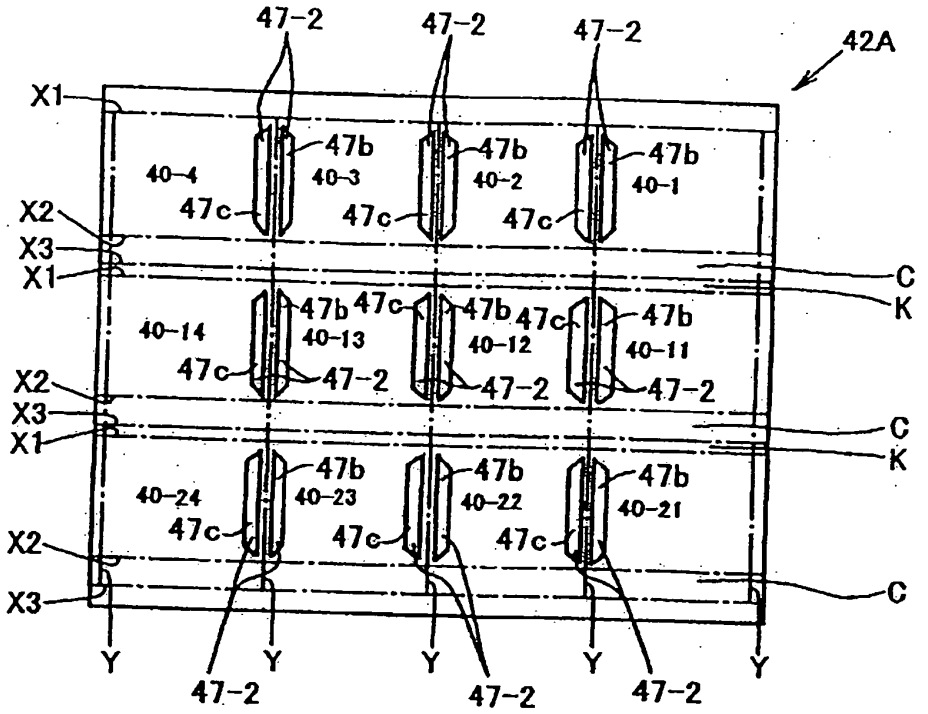
47-2
47-2
47-2
42A
X1
47b
40-4
40-3
40-2
40-1
47c
X2
X3
X1
C
K
40-14
40-13
40-12
40-11
47-2
X2
X3
X1
C
K
40-24
40-23
40-22
40-21
X2
X3
C
Y
47-2
47-2
47-2

FIG. 10

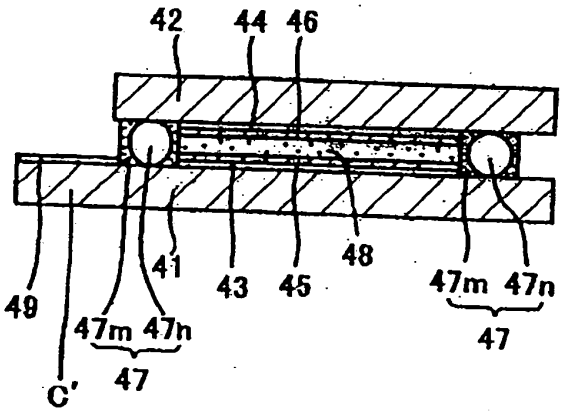
42
44
46
41
43
45
48
49
47m
47n
47
C'

FIG. 11

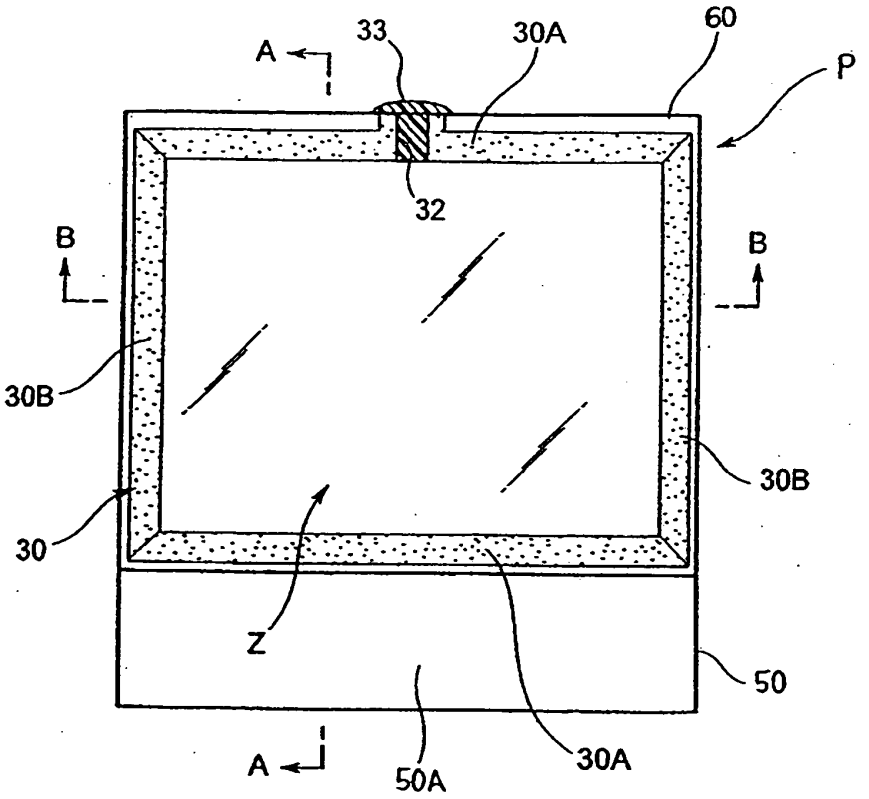
A
33
30A
60
P
32
B
B
30B
30B
30
Z
50
A
50A
30A

FIG. 12

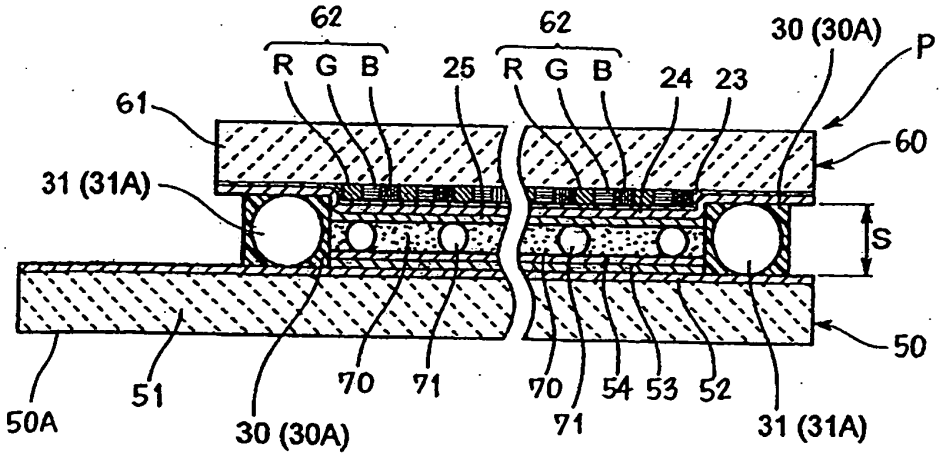
62
R G B
25
62
R G B
24
23
30 (30A)
P
61
60
31 (31A)
S
50
50A
51
30 (30A)
70
71
70
71
54
53
52
31 (31A)

FIG. 13

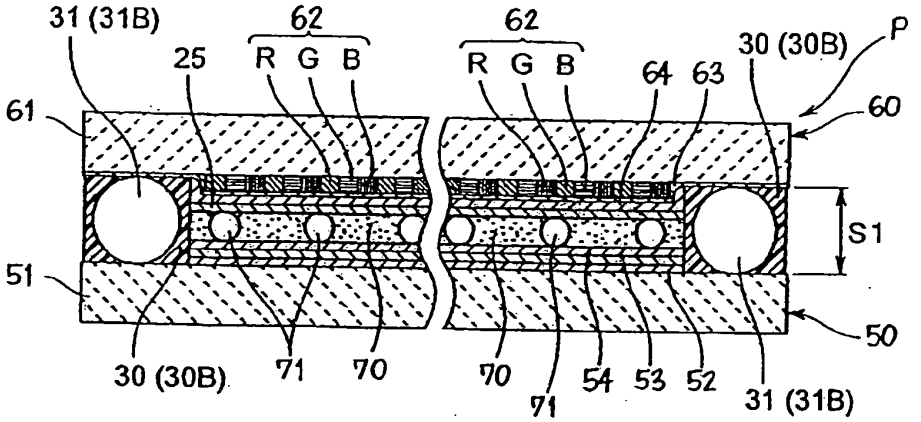
31 (31B)
62
R G B
62
R G B
25
64
63
30 (30B)
P
61
60
S1
51
50
30 (30B)
71
70
70
71
54
53
52
31 (31B)

FIG. 14

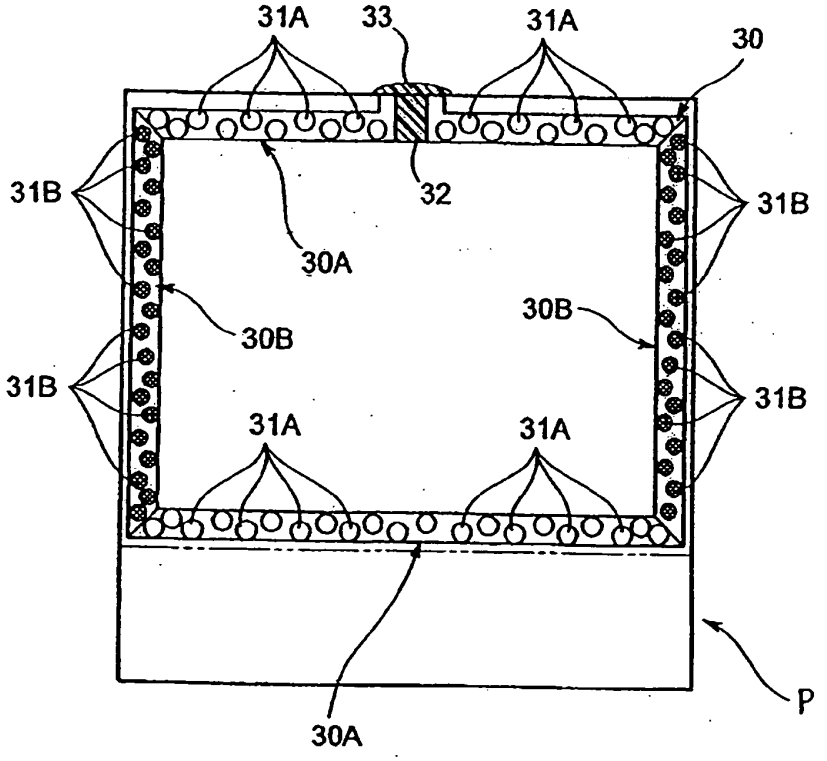
31A
33
31A
30
31B
32
31B
30A
30B
30B
31B
31B
31A
31A
P
30A

FIG. 15A

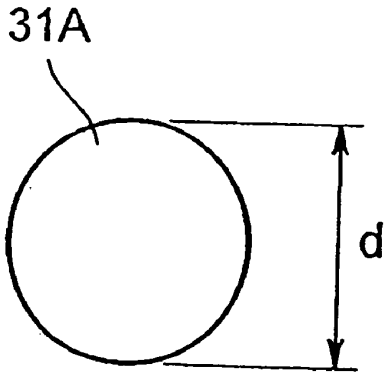

FIG. 15B

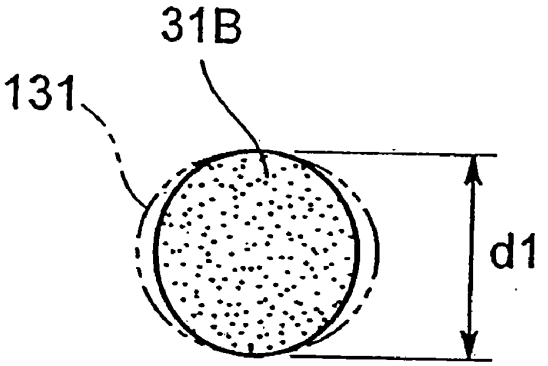

$d > d1$

FIG. 16

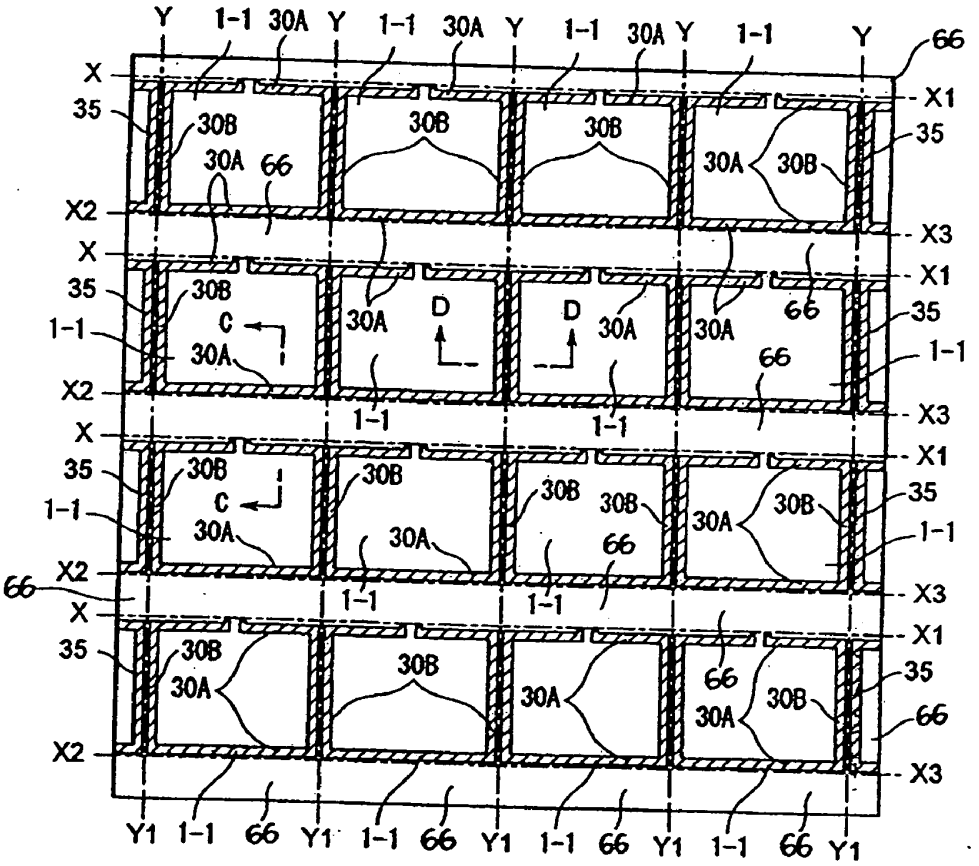

FIG. 17

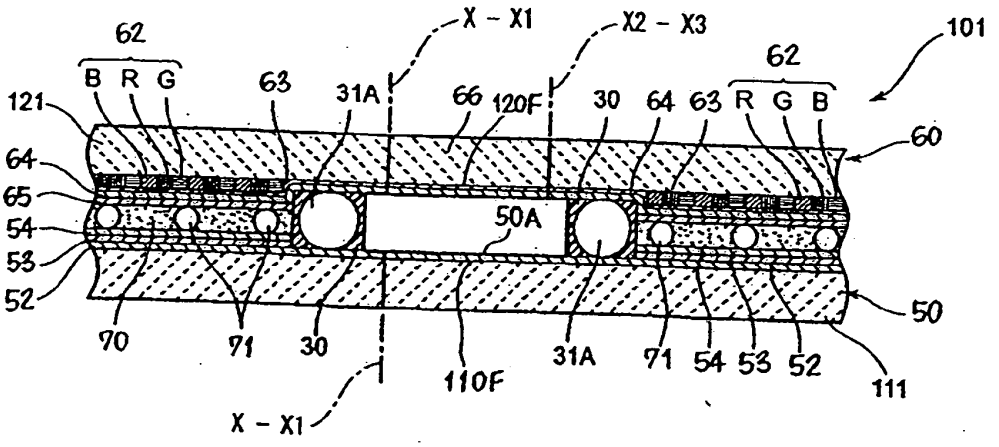
X - X1
X2 - X3
101
62
B R G
63
31A
66
120F
30
64
63
R G B
62
121
60
64
65
54
53
52
50A
50
70
71
30
110F
31A
71
54
53
52
111
X - X1

FIG. 18

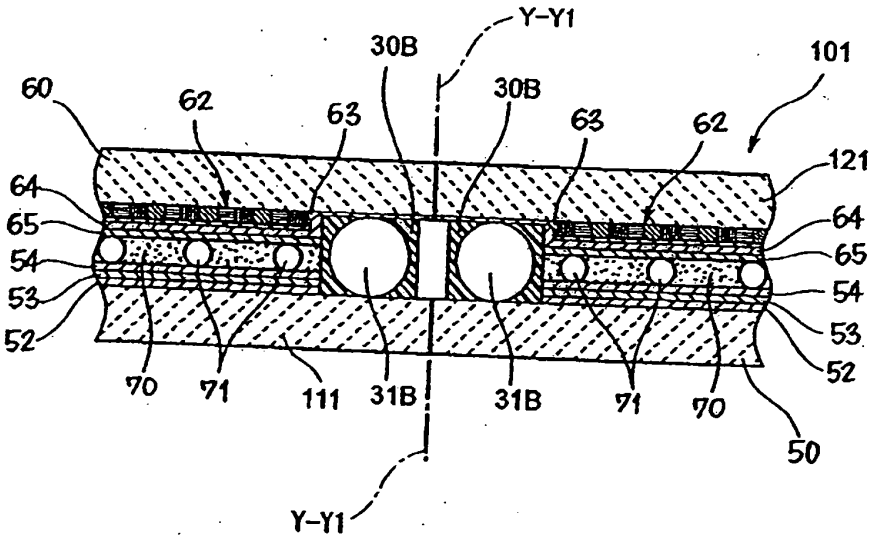
Y-Y1
30B
101
60
62
63
30B
63
62
121
64
65
54
53
52
64
65
54
53
52
70
71
111
31B
31B
71
70
50
Y-Y1

FIG. 19

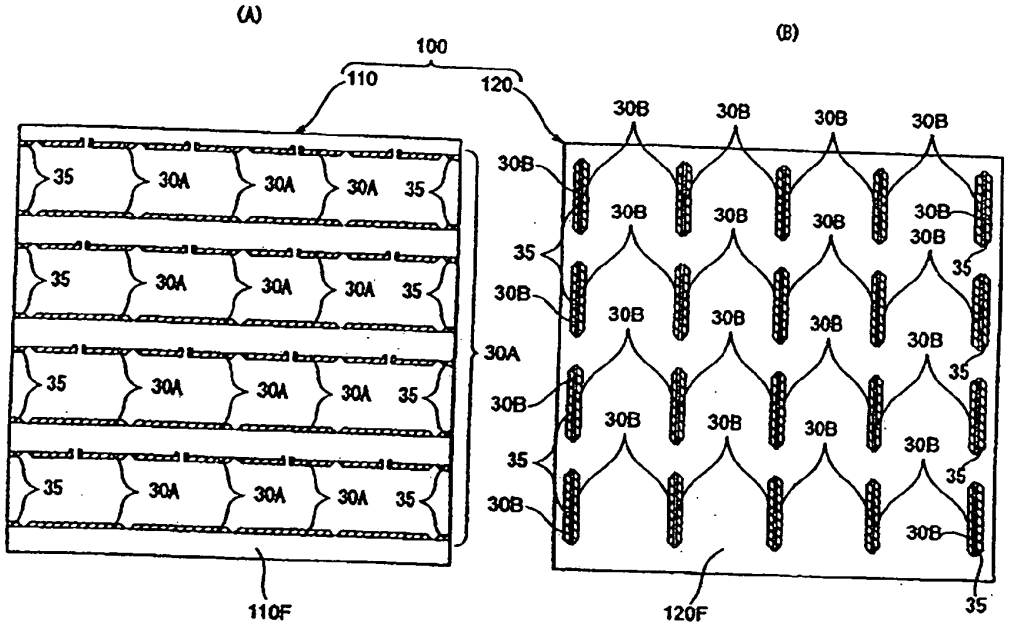

FIG. 20A

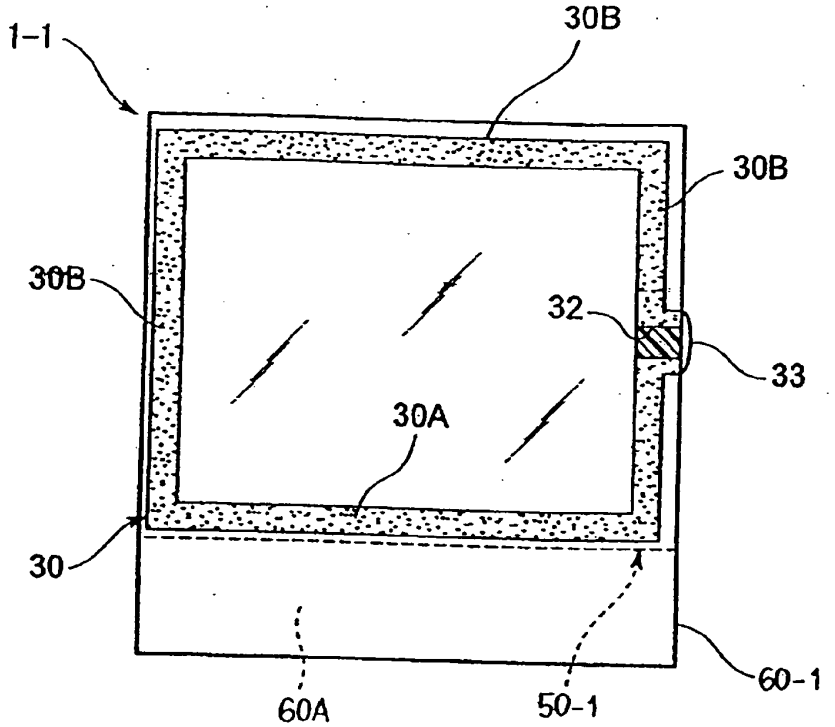

FIG. 20B

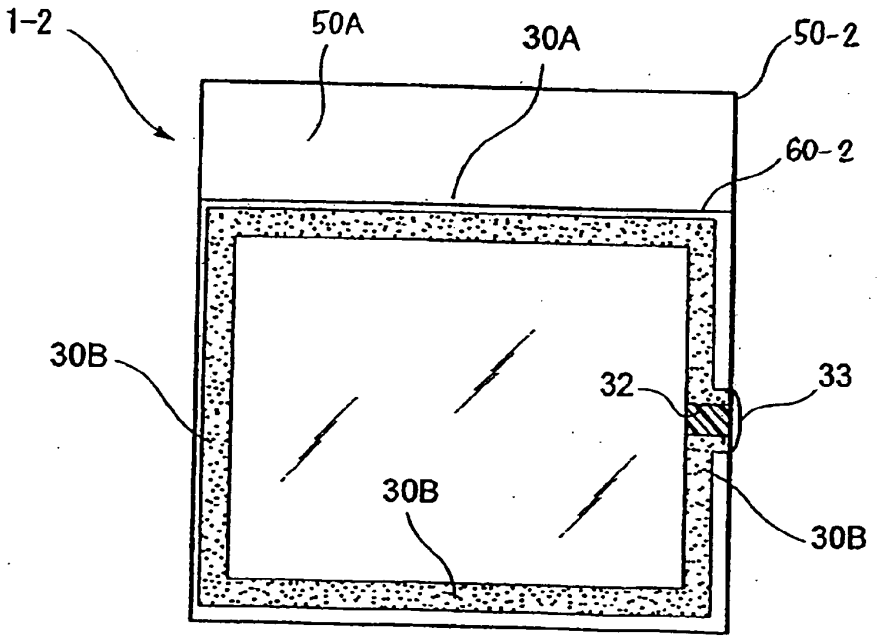

FIG. 21

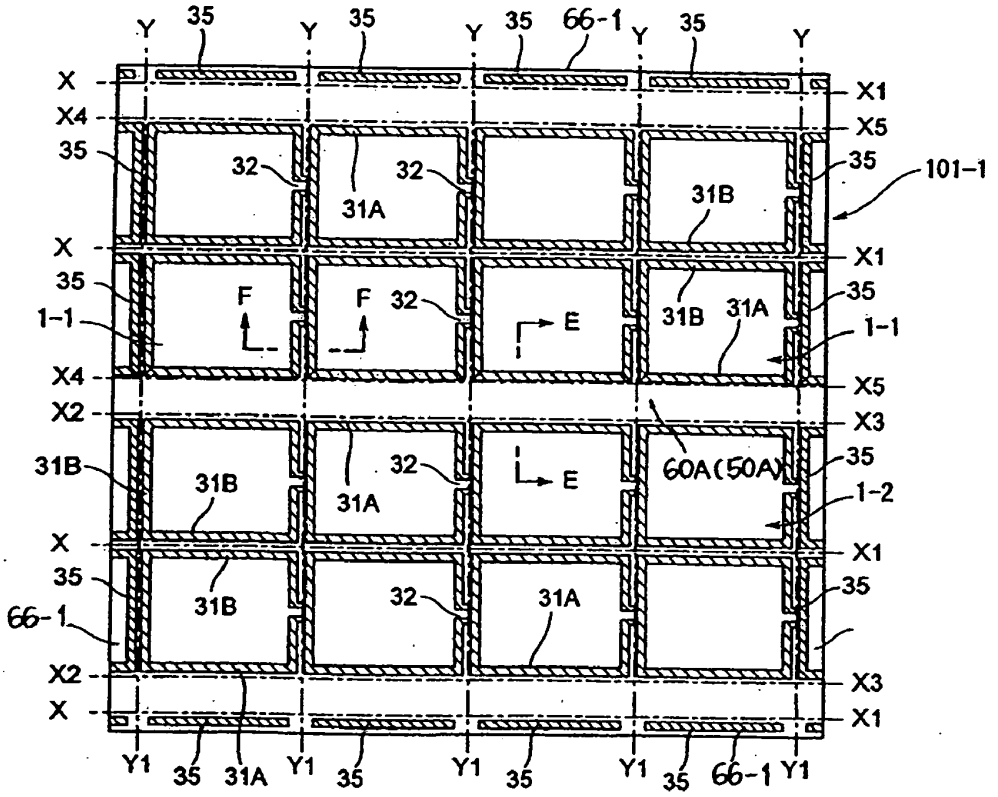

FIG. 22

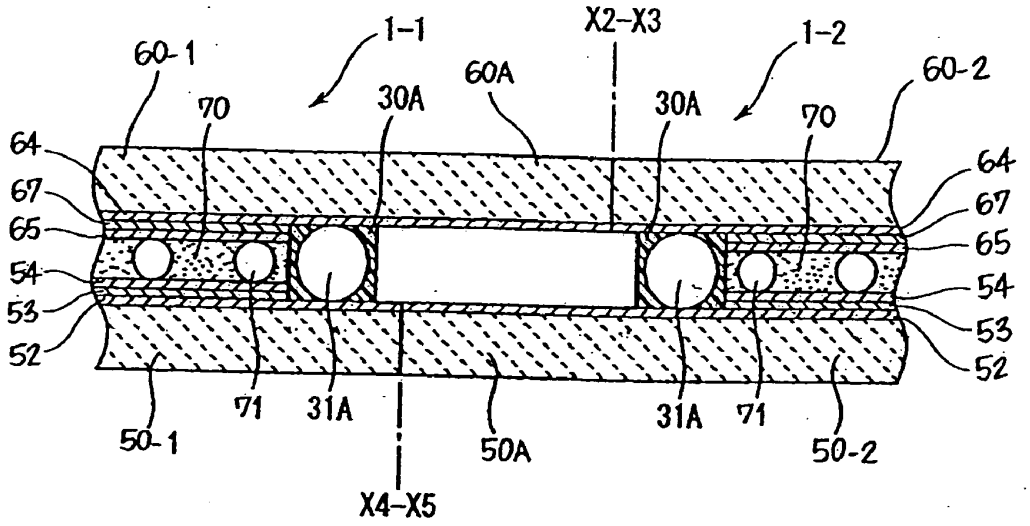
1-1
X2-X3
1-2
60-1
60A
60-2
70
30A
30A
70
64
67
65
54
53
52
64
67
65
54
53
52
71
31A
31A
71
50-1
50A
50-2
X4-X5

FIG. 23

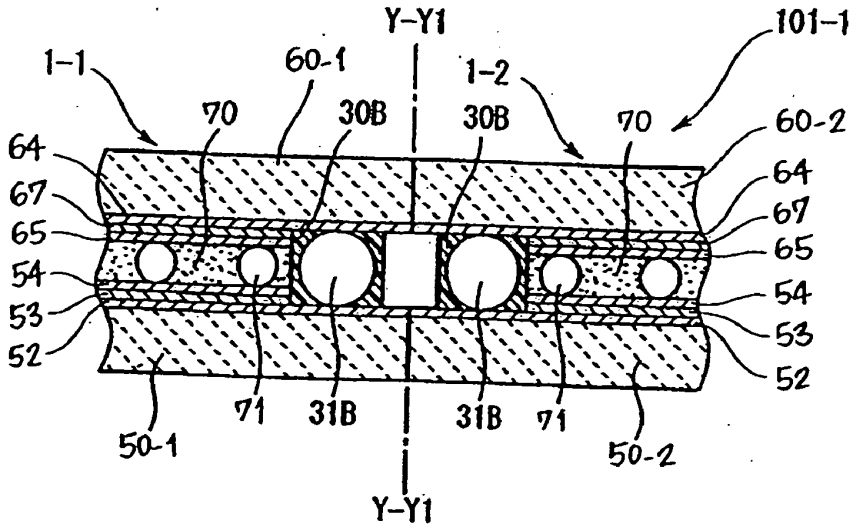
Y-Y1
101-1
1-1
60-1
1-2
70
30B
30B
70
60-2
64
67
65
54
53
52
64
67
65
54
53
52
71
31B
31B
71
50-1
50-2
Y-Y1

FIG. 24

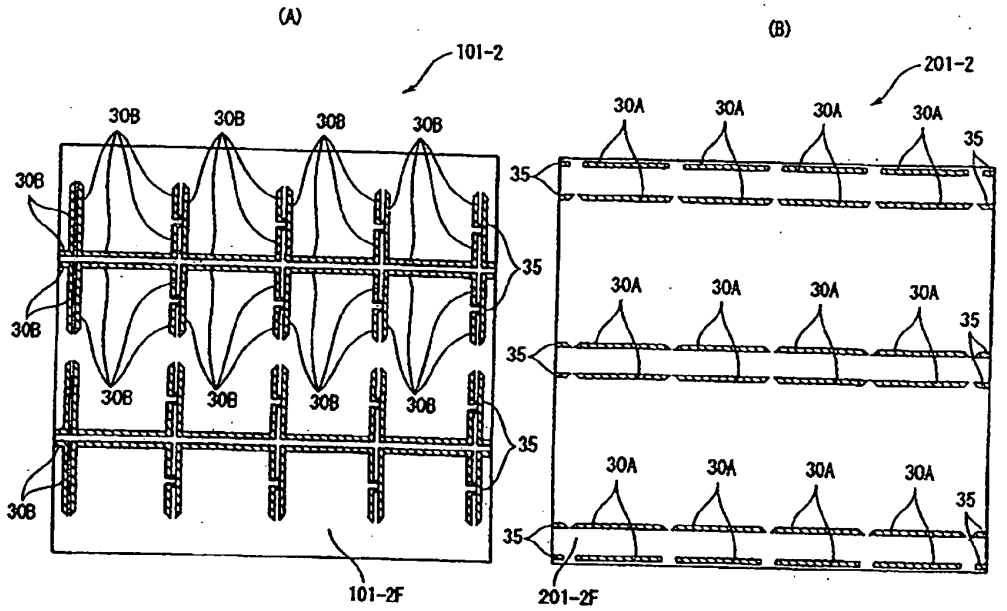

FIG. 25A

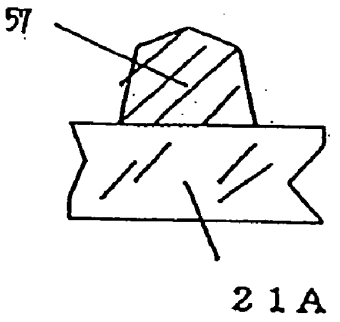

FIG. 25B

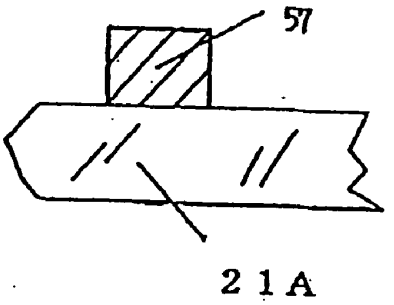

FIG. 26

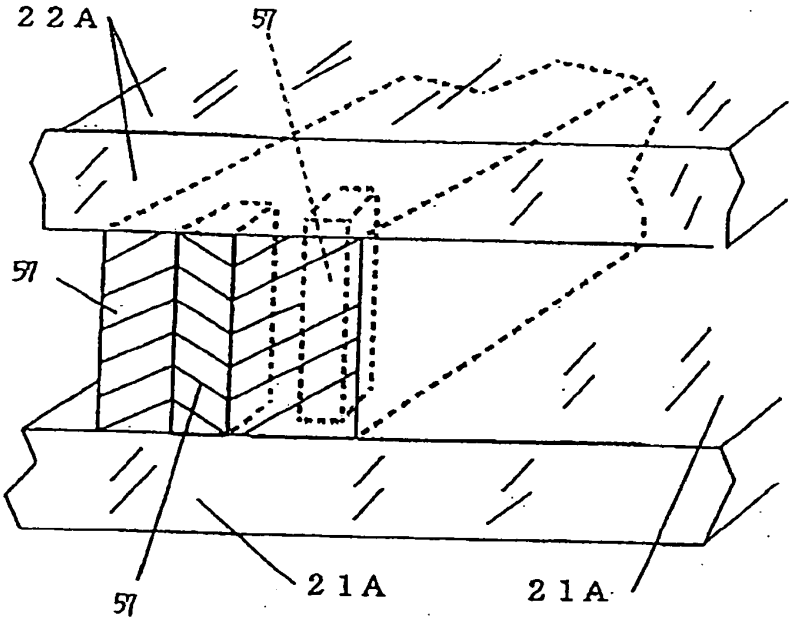
22A
57
57
57
21A
21A

FIG. 27

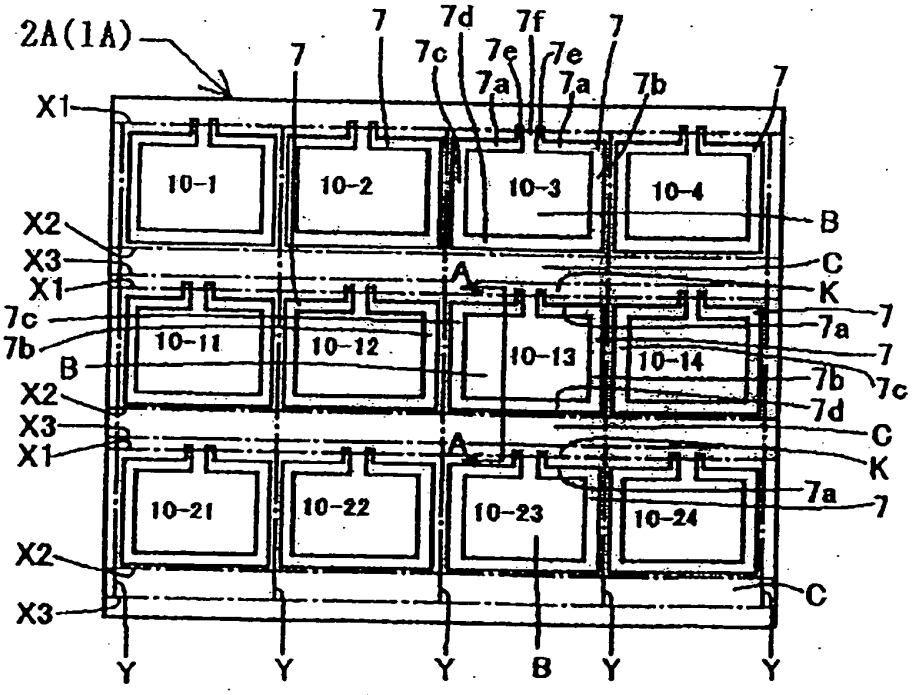
2A(1A)
X1
X2
X3
X1
7c
7b
B
X2
X3
X1
X2
X3
7
7d
7f
7c
7e
7e
7a
7a
7b
7
10-1
10-2
10-3
10-4
10-11
10-12
10-13
10-14
10-21
10-22
10-23
10-24
A
A
B
C
K
7
7a
7
7b
7c
7d
C
K
7a
7
C
Y
Y
Y
B
Y
Y

FIG. 28

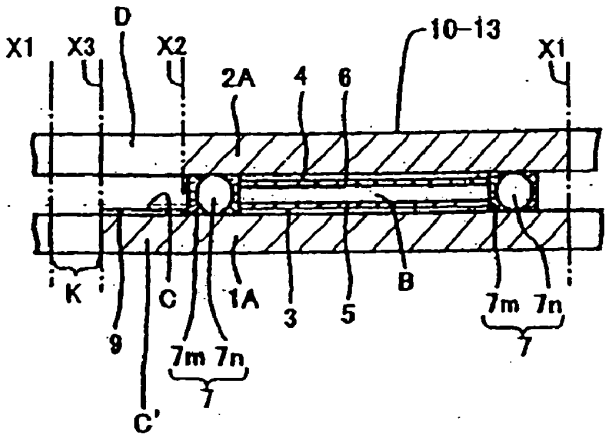
D
X1
X3
X2
2A
4
6
10-13
X1
K
9
C
C'
7m 7n
7
1A
3
5
B
7m 7n
7

FIG. 29

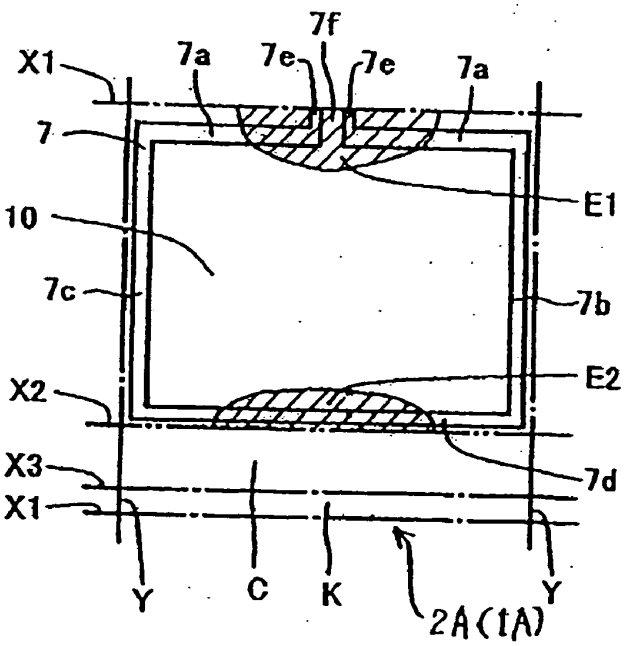
7f
X1
7a
7e
7e
7a
7
E1
10
7c
7b
E2
X2
7d
X3
X1
Y
C
K
2A(1A)
Y

FIG. 30

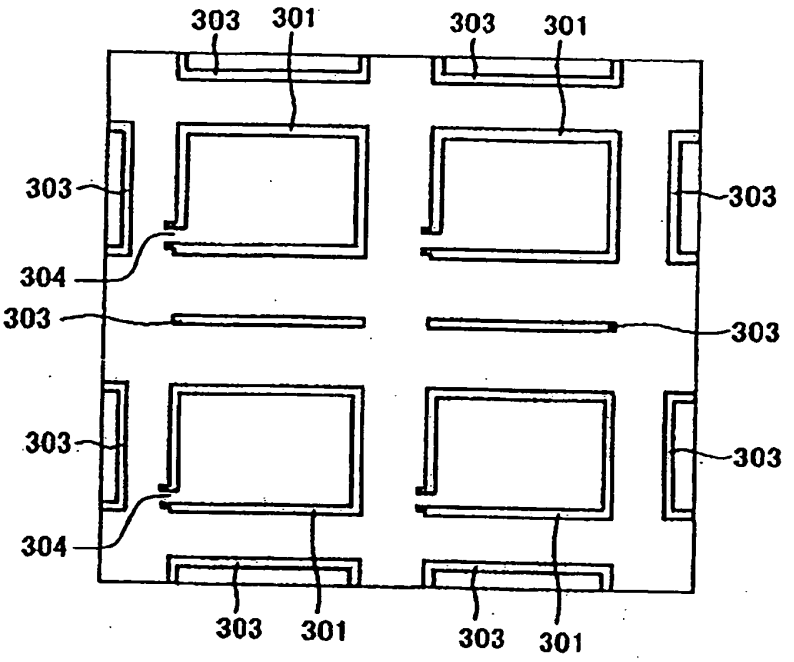
303
301
303
301
303
303
304
303
303
303
303
304
303
301
303
301

FIG. 31

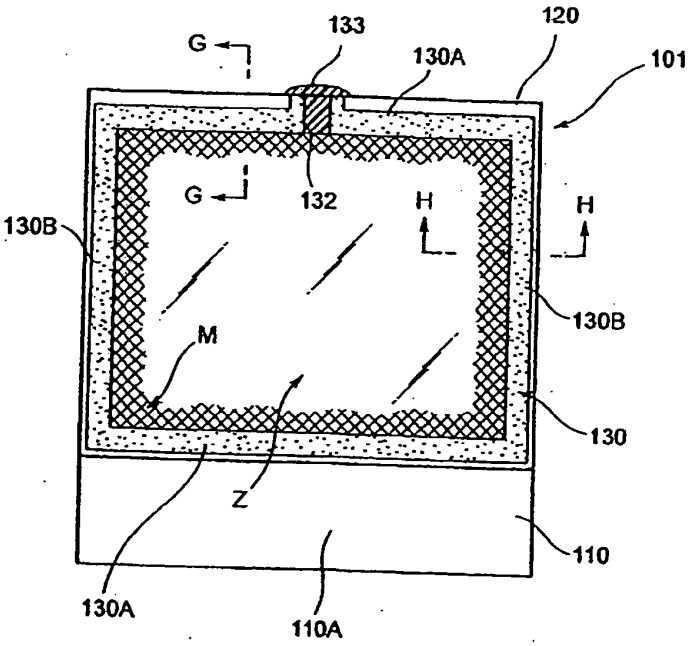
G
133
130A
120
101
G
132
H
H
130B
130B
M
130
Z
110
130A
110A

FIG. 32

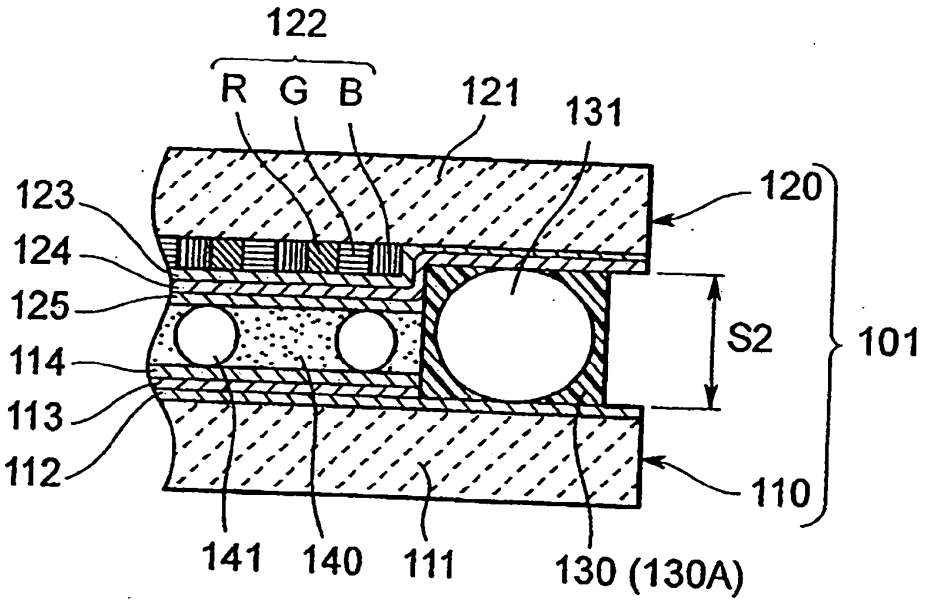
122
R G B
121
131
123
124
125
114
113
112
120
S2
101
110
141
140
111
130 (130A)

FIG. 33

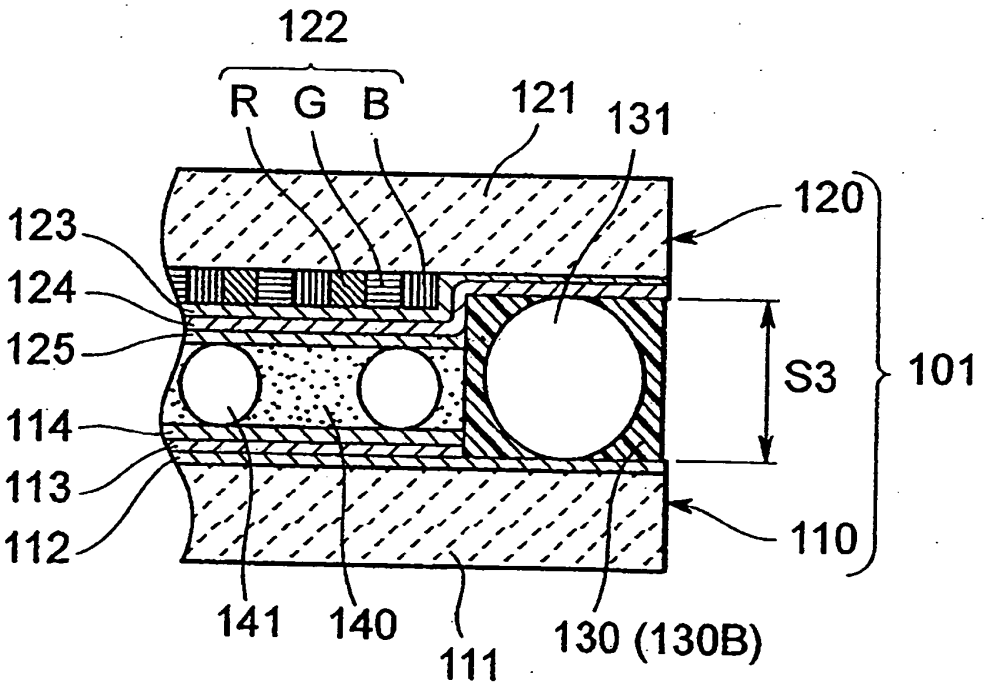
122
R G B
121
131
123
124
125
114
113
112
120
S3
101
110
141
140
111
130 (130B)

FIG. 34

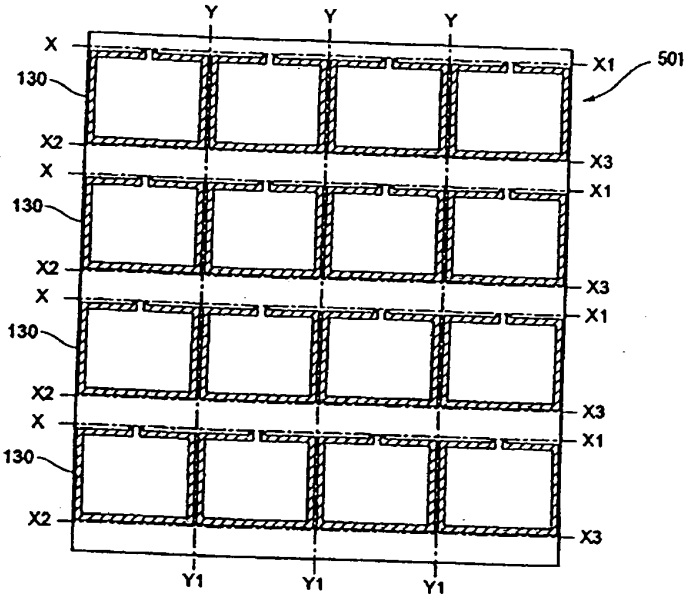
Y
Y
Y
X
130
X2
X
130
X2
X
130
X2
X
130
X2
X1
501
X3
X1
X3
X1
X3
X1
X3
Y1
Y1
Y1

FIG. 35

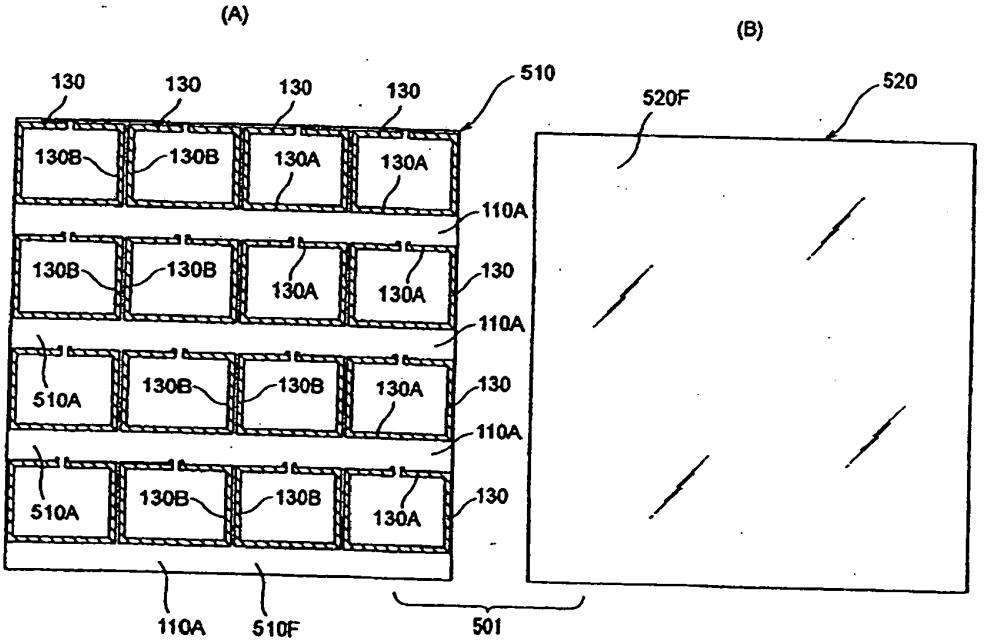
(A)
(B)
130
130
130
130
510
130B
130B
130A
130A
110A
130B
130B
130A
130A
130
110A
510A
130B
130B
130A
130
110A
510A
130B
130B
130A
130
110A
510F
501
520F
520

LARGE SUBSTRATE, METHOD OF MANUFACTURING LIQUID CRYSTAL DEVICE FROM THE SAME, AND LIQUID CRYSTAL DEVICE OBTAINED

FIELD OF THE INVENTION

[0001] The present invention relates to a large substrate in which a plurality of panels are formed and from which individual panels are cut, a liquid crystal device obtained from the large substrate, and a method of manufacturing the liquid crystal device. More specifically, the present invention relates to a large substrate, a liquid crystal device obtained from the large substrate, and a method of manufacturing the liquid crystal device in which the large substrate is formed by bonding upper and lower large substrates together face to face with a plurality of frame-shaped seals interposed between them to frame individual cells, the large substrate is cut into a plurality of strips each including one row of cells, and an electro-optical conversion member such as a liquid crystal is injected into the cells to form individual panels.

BACKGROUND OF THE INVENTION

[0002] Liquid crystal devices are used in various apparatus, including middle- and large-sized apparatus such as desktop personal computers, notebook personal computers, and liquid crystal television sets as well as small mobile apparatus such as electronic organizers, mobile telephones, and digital cameras. Thin and lightweight liquid crystal panels are used in these various types of apparatus.

[0003] A liquid crystal device has a panel filled with a liquid crystal as an electro-optical conversion member. The panel is cut from a large substrate in which a plurality of panels are formed.

[0004] A technique for forming a plurality of panels in a large substrate, cutting out the individual panels, and injecting a liquid crystal into the panels will now be described with reference to FIGS. **27** and **28**.

[0005] A lower large substrate **1**A and an upper large substrate **2**A are provided, on either one of which frame-shaped seals **7** are formed by a technique such as printing. Each frame-shaped seal **7** corresponds to one panel A plurality of frame-shaped seals **7** are arranged in a matrix on the lower large substrate **1**A or upper large substrate **2**A. Part of each frame-shaped seal is left open and the opening is flanked on both sides by projections **7***e* projecting outward to form an injection port **7***f*. The injection port **7***f* is used to inject the liquid crystal.

[0006] The seal **7** is made of a resin adhesive **7***m* containing gap adjustment members (referred to hereinafter as spacers) **7***n* for adjusting the gap between the substrates. The spacers **7***n* set the amount of gap (the gap dimension) between the lower and upper large substrates **1**A, **2**A. The resin adhesive **7***m* may be a thermosetting adhesive, UV-curing adhesive, or other adhesive.

[0007] Each frame-shaped seal **7** has four sides **7***a*, **7***b*, **7***c*, and **7***d*, side **7***a* facing side **7***d* and side **7***b* facing side **7***c*. The injection port **7***f* is located in side **7***a*.

[0008] After a plurality of frame-shaped seals **7** are formed on the lower large substrate **1**A or upper large substrate **2**A, the lower and upper large substrates **1**A, **2**A are placed face to face and aligned with each other in planes parallel to the opposing surfaces of the resultant large substrate. Then, the lower and upper large substrates **1**A, **2**A are bonded together by heating or ultraviolet irradiation under pressure applied to the lower and upper large substrates **1**A, **2**A from the outside toward the inside. This bonding step forms a plurality of panels **10-1**, **10-2**, **10-3**, . . . in the lower and upper large substrates **1**A, **2**A as shown in FIG. **27**.

[0009] When the lower and upper large substrates **1**A, **2**A are bonded together, injection regions B, into which the liquid crystal is injected as the electro-optical conversion member in a subsequent step, are created inside the individual seals **7** as shown in FIG. **28**.

[0010] A plurality of transparent electrodes **3** are provided for each of the panels on the surface of the lower large substrate **1**A facing the upper large substrate **2**A as shown in FIG. **28**, and oriented films **5** are provided on the transparent electrodes **3**. Similarly, a plurality of transparent electrodes **4** and oriented films **6** are provided on the surface of the upper large substrate **2**A facing the lower large substrate **1**A.

[0011] Each liquid crystal panel includes a liquid crystal section containing a liquid crystal sealed in the space enclosed by the frame-shaped seal and a connection electrode forming section C outside the frame-shaped seal. Connection electrodes (or wiring electrodes) disposed in the connection electrode forming section C establish electrical connections with electrodes (mainly, pixel electrodes and wiring electrodes) disposed in the liquid crystal section to transmit signals for driving the liquid crystal.

[0012] In FIGS. **27** and **28**, the connection electrode forming section C of a panel occupies the space between the frame-shaped seal **7** of the panel and the frame-shaped seal **7** of the vertically adjacent panel. The connection electrode forming section C is formed on an extension C' of the lower large substrate **1**A.

[0013] As shown in FIG. **28**, the connection electrode forming section C is formed only on the lower large substrate **1**A. Connection electrodes **9** are disposed on the connection electrode forming section C. The connection electrodes **9** include lead wiring electrodes (or wiring electrodes) for connection to the transparent electrodes **3** in the electro-optical conversion member injection region B on the lower large substrate **1**A, and for connection through a transfer-connection structure to the transparent electrodes **4** on the upper large substrate **2**A.

[0014] The dot-dash lines X**1**, X**2**, X**3**, and Y in FIG. **27** are cleaving or cutting lines for separating the panels **10-1**, **10-2**, **10-3**, **10-4**, **10-11**, . . . , **10-21**, . . . from the large substrate (mother substrate) composed of the lower and upper large substrates **1**A, **2**A. Individual panels are obtained by cutting along these cutting lines. (An arbitrary one of the panels will be referred to hereinafter as "panel **10**".)

[0015] First, the lower and upper large substrates **1**A, **2**A are cut simultaneously into strips along cutting lines X**3**, each strip including a row of panels **10**. Next, each strip is cut along cutting line X**1** to remove a region K to trim the projecting tips of the projections **7***e* on both sides of the injection ports **7***f* in the seals **7**. Then, the upper substrate **2**A is cut along cutting line X**2** as shown in FIG. **28** to remove an unnecessary portion D.

[0016] After the strips have been formed by these cuts, a liquid crystal is injected as an electro-optical conversion member into the individual panels through their injection ports **7***f*. Then, the injection ports **7***f* are sealed. Next, each strip is cut along cutting lines Y to obtain individual panels with the liquid crystal encapsulated therein, i.e., individual liquid crystal panels (liquid crystal devices).

[0017] The above manufacturing method allows a plurality of liquid crystal panels to be cut out and formed from a large substrate. A drawback has been found in this manufacturing method, however: the gap between the upper and lower substrates of each panel is not uniform over the entire panel, varying in different portions of the panel. The inventors have found a new tendency in this gap irregularity.

[0018] The plan view in FIG. **29** illustrates this problem of the above manufacturing method.

[0019] Among the sides **7***a*, **7***b*, **7***c*, and **7***d* of the frame-shaped seal **7** of a panel **10**, the gap tends to be narrower in the diagonally shaded areas E**1**, E**2** on sides **7***a* and **7***d* than in other areas.

[0020] This problem is caused by a difference in the distance between seals: the distances between side **7***a* of the seal of a panel **10** and side **7***d* of the seal of an adjacent panel **10**, and between the side **7***d* of the seal of a panel **10** and side **7***a* of the seal of an adjacent panel **10** are enlarged by the connection electrode forming section C and projecting tip clipping area K between the seal members **7***a*, **7***d* of the panel **10** and the seal members **7***d*, **7***a* of the adjacent panels **10**.

[0021] With reference to the large substrate in FIG. **27**, the distance between sides **7***a* and **7***d* of adjacent seals is lengthened by the connection electrode forming section C and projecting tip clipping area K between side **7***a* of the seal in panel **10-13** and side **7***d* of the seal in the upper adjacent panel **10-3**. Similarly, the distance between sides **7***d* and **7***a* is lengthened by the connection electrode forming section C and projecting tip clipping area K between side **7***d* of the seal in panel **10-13** and side **7***a* of the seal in the lower adjacent panel **10-23**.

[0022] In comparison, side **7***b* of the seal in panel **10-13** is close to side **7***c* of the seal in the right-adjacent panel **10-14**, and side **7***c* of the seal in panel **10-13** is also close to side **7***b* of the seal in the left-adjacent panel **10-14**.

[0023] If the seals disposed between the lower and upper large substrates are closely spaced in some parts and more widely spaced in other parts, the more widely spaced parts of the seals tend to experience a larger thickness deformation than the closely spaced parts when external pressure is applied to bond the lower and upper large substrates together. In short, the inventors have found that the seal thickness varies in different parts of a single panel.

[0024] If such a panel, with different thickness deformations in different seal areas (causing the gap between the lower and upper large substrates to vary significantly in different panel areas), is employed in a liquid crystal display device, uneven color and other problems degrading the color image quality or display quality will appear on the display.

[0025] Although various attempts have been made to minimize the gap irregularities of large substrates, the problem found above by the inventors have not been successfully addressed in the art.

[0026] In the art described in Japanese Unexamined Patent Application Publication No. 6-75233 and illustrated in FIG. **30**, for example, the distance between the centers of the lower and upper large substrates is mechanically adjusted by suction applied by a cell suctioning pump or pressure applied by a cell pressurizing compressor. FIG. **30** is a plan view showing the pattern in which the seals are disposed; each frame-shaped seal member **301** has a liquid crystal injection port **304** and is surrounded by dummy seal members **303** to balance the pressure applied to the seal material in the step of applying pressure to the substrates. No spacers are mixed into these seal members.

[0027] Japanese Unexamined Patent Application Publication No. 11-14953 discloses a technique for securing a uniform cell gap for each liquid crystal panel cut from a large substrate by surrounding each frame-shaped seal formed in the large substrate by dummy seals disposed parallel to the sides of the seal.

[0028] Japanese Unexamined Patent Application Publication No. 4-240621 discloses a technique for securing a uniform gap over the entire area of a liquid crystal panel composed of two substrates and providing a uniform thickness in the liquid crystal layer by placing the same number of spacers in the long sides of a rectangular frame-shaped seal as in the short sides.

[0029] Furthermore, a typical liquid crystal display panel has a pair of transparent substrates placed face to face, each equipped with transparent electrodes, an oriented film, and other elements, with a frame-shaped seal (encapsulating member) containing gap adjustment members (spacers) disposed in the peripheral parts between the opposite surfaces. A liquid crystal is injected as an electro-optical conversion member into the space surrounded by the seal between the opposite substrates.

[0030] A seal for a liquid crystal device will now be described with reference to FIGS. **31-35**.

[0031] A liquid crystal panel **101** is composed of a lower substrate **110** and an upper substrate **120** placed face to face with a gap between them. The lower substrate **110**, as shown in FIGS. **32** and **33**, has a transparent substrate **111** as a base member, with transparent electrodes **112** formed by patterning on the surface of the transparent substrate **111** facing the upper substrate **120**. An insulating film **113** is formed on the upper surface of the transparent electrodes **112** to prevent the transparent electrodes **112** from being short-circuited to the electrodes on the upper substrate **120** by dust or other foreign particles. The lower substrate **110** also has an oriented film **114** formed on the upper surface of the insulating film **113**. When the liquid crystal panel **101** is used as a reflective liquid crystal panel, the lower substrate **110** may be opaque or semitransparent, and for an active panel TFT or MIM (TFD) elements or the like may be formed on the substrate.

[0032] The upper substrate **120** has a transparent substrate **121** as a base member, similar to the lower substrate **110**, and has a color filter **122** with red (R), green (G), and blue (B) color filters arranged in a striped or matrix pattern on the surface of the transparent substrate **121** facing the lower substrate **110**. As shown in FIGS. **32** and **33**, a flattening film, protection film, or overcoat **123** is disposed on the lower surface of the color filter **122** to protect the color filter **122** and flatten its surface. The overcoat **123** has transparent electrodes **124** formed by patterning on its lower surface. The upper substrate **120** also has an oriented film **125** formed on the lower surface of the transparent electrodes **124**.

[0033] A frame-shaped seal **130** is disposed between the lower and upper substrates **110**, **120** of the liquid crystal panel **101**. Spacers **131** are intermixed with the seal **130**. The lower and upper substrates **110**, **120** are bonded together through the seal **130**.

[0034] The spacers **131** serve to maintain a uniform gap (cell gap) between the lower and upper substrates **110**, **120**. More specifically, the lower and upper substrates **110**, **120** are positioned with a predetermined gap therebetween by the spacers **131**. The region surrounded by the frame-shaped seal **130** is the space into which the liquid crystal injected. The liquid crystal **140** is injected into this space through the injec-

tion port **132** shown in FIG. **31**. After a predetermined amount of liquid crystal is injected, the injection port **132** is sealed with port sealing resin **133**. In this manner, the liquid crystal layer **140** shown in FIGS. **32** and **33** is formed. Intra-cell spacers **141** are scattered throughout the liquid crystal layer **140** to keep the gap (cell gap) between the substrates uniform.

[0035] A liquid crystal panel **101** having the above structure is obtained by cutting a large liquid crystal cell **501**, shown as a large substrate (mother substrate) in FIG. **34**, on which a plurality of liquid crystal panels are created at once, then injecting a liquid crystal into each liquid crystal cell, and sealing each injection port. The upper and lower substrates constituting the large liquid crystal cell **501** are first cut simultaneously along the cutting lines marked X-X**1**. Then, the upper substrate is cut along cutting lines X**2**-X**3** to obtain strips each including a plurality of liquid crystal cells arranged in a row.

[0036] A liquid crystal is injected through the respective injection ports of the individual liquid crystal cells in the strips; then the injection ports are sealed, and the upper and lower substrates including the liquid crystal cells are cut simultaneously along cutting lines Y-Y**1** in FIG. **34** to produce individual liquid crystal panels.

[0037] The large liquid crystal cell **501** shown as the mother substrate in FIG. **34** is formed by overlaying the upper large substrate **520** shown in FIG. **35**(B) face to face on the lower large substrate **510** shown in FIG. **35**(A). Seals **130** arranged as a plurality of rectangular frames are formed on the lower large substrate **510**. No seals **130** are formed on the upper large substrate **52**.

[0038] The transparent electrodes **112**, insulating films **113**, and oriented films **114** shown in FIGS. **32** and **33** (not shown in FIG. **35**(A)) are disposed on the surface **510**F of the lower large substrate **510** facing the upper large substrate **520** in FIG. **35**(A). A plurality of frame-shaped seals **130** are also disposed as described above on the lower large substrate **510**.

[0039] The color filters **122**, overcoats **123**, transparent electrodes **124**, and oriented films **125** shown in FIGS. **32** and **33** (not shown in FIG. **35**(B)) are disposed on the surface **520**F of the upper large substrate **520** facing the lower large substrate **510** in FIG. **35**(B).

[0040] A liquid crystal panel **101** produced from this large liquid crystal cell **501** has the following problems.

[0041] As shown in FIG. **31**, an extension **110**A of the lower substrate **110** protrudes beyond the associated end of the upper substrate **120**. The side **130**A of the seal adjacent to the extension **110**A of the lower substrate **110** and the opposite side **130**A (provided with the injection port **132**) contain spacers **131** having a particle size of approximately 6.0 μm. Accordingly, the thickness of these sides **130**A of the seal, corresponding to the gap between the opposite substrates, is on the average approximately 6 μm, this gap being defined by the particle size of the spacers **131**.

[0042] The sides **130**B of the seal that meet sides **130**A at right angles contain spacers of the same size and material as those above, so the thickness of these sides **130**B, corresponding to the gap between the opposite substrates, is also approximately 6 μm, defined by the particle size of the spacers **131**.

[0043] The inventors have found that the luminance observed near sides **130**A of the seal is different from the luminance observed near sides **130**B when the completed liquid crystal panel is illuminated by a backlight. Through investigation, the inventors have found that this problem is caused by a difference in flattening between the spacers **131** in sides **130**A and the spacers **131** in the sides **130**B perpendicular to sides **130**A. This will be described below with reference to the cross-sectional views of a representative side **130**A in FIG. **32** and a representative side **130**B in FIG. **33**.

[0044] FIGS. **32** and **33** show the degrees of flattening of the spacers **131** in the sides **130**A and **130**B of the seals. The flattening of the spacers **131** in the side **130**A of the seal shown (with some exaggeration) in FIG. **32**, is significantly greater than the flattening of the spacers **131** in the side **130**B of the seal shown in FIG. **33**. More specifically, the spacers **131** in FIG. **32** are flattened enough to reduce the gap between the opposite substrates to approximately 5.5 μm, while the spacers **131** in FIG. **33** are flattened less and the gap between the opposite substrates remains approximately 6.0 μm.

[0045] It has been found that this gap difference of approximately 0.5 μm between sides **130**A and **130**B of the seal, which are disposed in different locations in the panel, causes luminance unevenness M in the peripheral parts around the display area Z (the effective panel area) of the liquid crystal panel **101** shown in FIG. **31** and thereby degrades the display quality.

[0046] Accordingly, the inventors examined how the positional difference of the sides of the seal causes such luminance unevenness near the seal in the panel.

[0047] Through investigation of the gap between the upper and lower substrates of a liquid crystal panel **101** obtained from a large liquid crystal cell **501** as shown in FIG. **34**, it has been found that the gap S**2** (FIG. **32**) appears in areas corresponding to sides **130**A of the seals in FIG. **35**(A) and the gap S**3** (FIG. **33**) appears in areas corresponding to sides **130**B of the seals in FIG. **35**(A).

[0048] This is because in the large liquid crystal cell **501**, mutually adjacent sides **130**A of the seals are relatively distant from each other because of the extension **110**A interposed between them, while mutually adjacent sides **130**B of the seals are relatively close together because there is no extension **110**A between them.

[0049] More specifically, the narrowly spaced sides **130**B of the seals (spaced close together) are thought to be more resistant to the external pressure applied when the large liquid crystal cell **501** is manufactured and to be able prevent the spacers **131** in the seal from being significantly flattened. In contrast, the more widely spaced sides **130**A of the seals are thought to be less resistant to the pressure applied when the large liquid crystal cell **501** is manufactured; the individual spacers **131** in sides **130**A of the seals are subject to more pressure and suffer more flattening.

[0050] A difference is accordingly inferred to occur between the gaps S**2** and S**3** between the upper and lower substrates at sides **130**A and **130**B of the seal (after the seal is deformed).

SUMMARY OF THE INVENTION

[0051] An object of the present invention is to arrange seals containing gap adjustment members, which are disposed between upper and lower substrates constituting a large substrate (mother substrate), so as to make the gap between the upper and lower substrates uniform over the entire area of the large substrate.

[0052] To achieve the above object, according to a first aspect of method of manufacturing liquid crystal panels of the present invention, first and second substrates are bonded together with frame-shaped seals interposed therebetween to

form regions corresponding to a plurality of panels, a liquid crystal is then encapsulated inside the seals, and the first and second substrates are cut to obtain individual liquid crystal panels. In this method of manufacturing, if a side of the frame formed by the seal in one panel is close to a side of the frame formed by the seal in an adjacent panel when the first and second substrates are placed face to face, these sides are formed from a sealing material containing a relatively low proportion of gap adjustment members. Conversely, if a side of the frame formed by the seal in one panel is distant from a side of the frame formed by the seal in an adjacent panel so that these two seals are widely spaced, these sides are formed from a sealing material containing a relatively high proportion of gap adjustment members.

[0053] Dummy seals may be provided outside the seals closest to the peripheral parts of the first and/or second substrate, the distance between these seals and the dummy seals being equal to the distance between adjacent seals in other areas.

[0054] The gap adjustment members may be spherical, cylindrical, or prismatic.

[0055] The first or second substrate may have extensions extending outwardly from the seal frames to accommodate connection electrodes, and the two sides of the seals adjacently bounding each extension may be formed from a sealing material containing a relatively high proportion of gap adjustment members.

[0056] According to a second aspect of method of manufacturing liquid crystal panels of the present invention, first and second substrates are bonded together face to face with frame-shaped seals containing gap adjustment members interposed between them to form regions corresponding to a plurality of panels, a liquid crystal is then encapsulated inside the seals, and the first and second substrates are cut to obtain individual liquid crystal panels. In this method of manufacturing, the gap adjustment members are spherical or cylindrical, and if a side of the frame formed by the seal in one panel is close to a side of the frame formed by the seal in an adjacent panel when said first and second substrates are placed face to face, these sides are formed from a sealing material containing gap adjustment members having a relatively small diameter. If a side of the frame formed by the seal in one panel is distant from a side of the frame formed by the seal in an adjacent panel, these sides are formed from a sealing material containing gap adjustment members having a relatively large diameter. The sides containing gap adjustment members having a relatively small diameter are formed on the first substrate, and the sides containing gap adjustment members having a relatively large diameter are formed on the second substrate so that the seal members form a frame when the first and second substrates are bonded face to face.

[0057] The first or second substrate may have extensions extending outward from one frame formed by the seal to accommodate connection electrodes, and the two seal members disposed on both sides of the extension may be formed from a sealing material containing gap adjustment members having a relatively large diameter.

[0058] In a method of manufacturing liquid crystal panels according to a third aspect of the present invention, first and second substrates are bonded together face to face with frame-shaped seals containing gap adjustment members interposed therebetween to form regions corresponding to a plurality of panels, a liquid crystal is then encapsulated inside the seals, and the first and second substrates are cut to obtain individual liquid crystal panels. In this method of manufacturing, the gap adjustment members are cylindrical or prismatic. If a side of the frame formed by the seal in one panel is close to a side of the frame formed by the seal in an adjacent panel when the first and second substrates are placed face to face, these sides are formed from a sealing material containing gap adjustment members having a relatively small cross-sectional area in a plane parallel to the surface of the liquid crystal panel. Conversely, if a side of the frame formed by the seal in one panel is distant from a side of the frame formed by the seal in an adjacent panel, these sides are formed from a sealing material containing gap adjustment members having a relatively large cross-sectional area in a plane parallel to the surface of the liquid crystal panel.

[0059] The first or second substrate may have extensions extending outward from one frame formed by the seal to accommodate connection electrodes, and the two seal members disposed on both sides of the extension may be formed from a sealing material containing gap adjustment members having a relatively large cross-sectional area.

[0060] Dummy seals may be provided outside the seals closest to the peripheral parts of the first and/or second substrate, the distance between these seals and the dummy seals being equal to the distance between adjacent seals in other areas.

[0061] According to a first aspect of large substrate of the present invention, regions corresponding to a plurality of panels are formed by bonding first and second substrates face to face with seals interposed therebetween, so that a plurality of panels can be obtained from the large substrate. One seal is formed in a frame shape for each panel to be produced. If a side of the frame formed by the seal in one panel is close to a side of the frame formed by the seal in an adjacent panel and the seals are closely spaced, these sides of the seals are formed from a sealing material containing a relatively low proportion of gap adjustment members. Conversely, if a side of the frame formed by the seal in one panel is distant from a side of the frame formed by the seal in an adjacent panel so that these two seals are widely spaced, these sides of the seals are formed from a sealing material containing a relatively high proportion of gap adjustment members.

[0062] The gap adjustment members may be spherical, cylindrical, or prismatic.

[0063] The first or second substrate may have extensions extending outward from one frame formed by the seal to accommodate connection electrodes, and the two seal members disposed on both sides of the extension may be formed from a sealing material containing a relatively high proportion of gap adjustment members.

[0064] According to a second aspect of large substrate of the present invention, a region corresponding to a plurality of panels is formed by bonding first and second substrates face to face with seals interposed therebetween, so that a plurality of panels can be obtained from the large substrate. One seal is formed in a frame shape for each panel to be produced. If a side of the frame formed by the seal in one panel is close to a side of the frame formed by the seal in an adjacent panel and the seals are narrowly spaced, these sides of the seals are formed from a sealing material containing spherical spacers of relatively small diameter as gap adjustment members. Conversely, if a side of the frame formed by the seal in one panel is distant from a side of the frame formed by the seal in an adjacent panel so that these two seals are widely spaced,

these sides of the seals are formed from a sealing material containing spherical spacers of relatively large diameter as gap adjustment members.

[0065] The first or second substrate may have extensions extending outward from one frame formed by the seal to accommodate connection electrodes, and the two seal members disposed on both sides of the extension may be formed from the sealing material containing spherical spacers of relatively large diameter.

[0066] According to a third aspect of large substrate of the present invention, regions corresponding to a plurality of panels are formed by bonding first and second substrates face to face with seals interposed therebetween, so that a plurality of panels can be obtained from the large substrate. One seal is arranged in a frame shape for each panel to be produced. If a side of the frame formed by the seal in one panel is close to a side of the frame formed by the seal in an adjacent panel so that the seals are narrowly spaced, these sides of the seals are formed from a sealing material containing gap adjustment members having a relatively small cross-sectional area in a plane parallel to the surface of the liquid crystal panel. Conversely, if a side of the frame formed by the seal in one panel is distant from a side of the frame formed by the seal in an adjacent panel so that these two seals are widely spaced, these sides of the seals are formed from a sealing material containing gap adjustment members having a relatively large cross-sectional area in a plane parallel to the surface of the liquid crystal panel.

[0067] The first or second substrate may have extensions extending outward from one frame formed by the seal to accommodate connection electrodes, and the two seal members disposed on both sides of the extension may be formed from a sealing material containing gap adjustment members having a relatively large cross-sectional area in a plane parallel to the surface of the liquid crystal panel.

[0068] According to a first aspect of liquid crystal panel of the present invention, opposing substrates are bonded face to face with a frame-shaped seal containing gap adjustment members interposed between them, at least one of the opposing substrates has an extension at least at one of its ends, the extension protruding beyond the associated end of the other substrate, and a liquid crystal is encapsulated inside the seal. In this liquid crystal panel, the side of the seal adjacent to the extension contains a higher proportion of gap adjustment members than another side of the seal.

[0069] The gap adjustment members may be spherical, cylindrical, or prismatic spacers.

[0070] According to a second aspect of liquid crystal panel of the present invention, opposing substrates are bonded face to face with a frame-shaped seal containing gap adjustment members interposed between them, at least one of the opposing substrates has an extension at least at one of its ends, the extension protruding beyond the associated end of the other substrate, and a liquid crystal is encapsulated inside the seal. In this liquid crystal panel, the side of the seal adjacent to the extension contains spherical or cylindrical gap adjustment members having a larger diameter than in another side of the seal.

[0071] According to a third aspect of liquid crystal panel of the present invention, opposing substrates are bonded face to face with a frame-shaped seal containing gap adjustment members interposed between them, at least one of the opposing substrates has an extension at least at one of its ends, the extension protruding beyond the associated end of the other substrate, and a liquid crystal is encapsulated inside the seal. In this liquid crystal panel, the side of the seal adjacent to the extension contains cylindrical or prismatic gap adjustment members having a larger cross-sectional area in a plane parallel to the surface of the liquid crystal panel than in another side of the seal.

[0072] According to a modified third aspect of liquid crystal panel of the present invention, at least one of the opposite substrates bonded face to face with a frame-shaped seal containing fixed spacers interposed between them has an extension at least at one of its ends, the extension protruding beyond the associated end of the other substrate, a liquid crystal is encapsulated inside the seal, and the side of the seal adjacent to the extension contains a higher density of fixed spacers than another side of the seal.

[0073] According to a modified third aspect of liquid crystal panel of the present invention, the density of fixed spacers may be adjusted by adjusting the number of spacers to be disposed per unit area of the seal.

[0074] According to a modified third aspect of liquid crystal panel of the present invention, the density of spacers may be adjusted by adjusting the number of spacers to be disposed each having the same cross-sectional area in a plane parallel to the substrate surface after the opposing substrates are bonded together.

[0075] According to a modified third aspect of liquid crystal panel of the present invention, the density of spacers may be adjusted by adjusting the number of spacers having different cross-sectional areas in a plane parallel to the substrate surface after the opposing substrates are bonded together.

[0076] Alternatively, according to a modified third aspect of liquid crystal panel of the present invention, as the improved version of the third aspect of the present invention, the density of fixed spacers may be adjusted by adjusting an area density which is defined by the total cross-sectional area of the fixed spacers (in a plane parallel to the substrate surface) per unit area in the seal.

[0077] In a liquid crystal panel according to a fourth aspect of the present invention, a liquid crystal panel having a liquid crystal layer encapsulating a liquid crystal inside a seal disposed in the gap between two substrates disposed face to face with elastic spacers interposed between them has a first end where an extension extends from one end of one of the two substrates and a second end where the ends of the substrates are mutually aligned. The seal is formed along the edges of one of the two substrates, the spacers are disposed in or near the seal, the spacers form a first spacer structure when disposed near the first end and form a second spacer structure when disposed near the second end, and the first spacer structure is more resistant to external pressure applied to the two substrates than the second spacer structure and prevents the gap from being significantly reduced.

BRIEF DESCRIPTION OF THE DRAWINGS

[0078] FIG. **1** is a transparent plan view of a plurality of panels formed in a large substrate made of two substrates bonded face to face in a first example according to a first embodiment of the present invention.

[0079] FIG. **2** is a cross-sectional view of the large substrate in FIG. **1** taken along line A-A.

[0080] FIG. **3** is a partially enlarged transparent plan view of section B of the large substrate in FIG. **1**.

[0081] FIG. **4** is a flowchart illustrating the steps of producing a plurality of panels from the large substrate (mother substrate) in FIG. **1**.

[0082] FIG. **5**(A) shows the lower substrate in the large substrate in FIG. **1**, with first seal members disposed thereon.

[0083] FIG. **5**(B) shows the upper substrate in the large substrate in FIG. **1**, with second seal members disposed thereon.

[0084] FIG. **6** is a transparent plan view of a plurality of panels formed in the large substrate made of two substrates bonded face to face in a second example according to the first embodiment of the present invention.

[0085] FIG. **7** is a cross-sectional view of the large substrate in FIG. **6** taken along line A-A.

[0086] FIG. **8** shows the lower substrate in the large substrate in FIG. **6**, with first seal members disposed thereon.

[0087] FIG. **9** shows the upper substrate in the large substrate in FIG. **6**, with second seal members disposed thereon.

[0088] FIG. **10** is a cross-sectional view showing essential components of a single panel cut from the large substrate in FIG. **6**.

[0089] FIG. **11** is a transparent plan view of a single liquid crystal panel cut from a large substrate in a third example according to a second embodiment of the present invention.

[0090] FIG. **12** is a cross-sectional view showing essential components of the liquid crystal panel in FIG. **11** taken along line A-A.

[0091] FIG. **13** is a cross-sectional view showing essential components of the liquid crystal panel in FIG. **11** taken along line B-B.

[0092] FIG. **14** schematically shows spacers scattered in the seal disposed in the panel shown in FIG. **11**.

[0093] FIG. **15**(A) and FIG. **15**(B) illustrate the diameters of spacers mixed in side **30**A of the seal shown in FIG. **14**.

[0094] FIG. **16** is a plan view of a large liquid crystal cell from which a large number of liquid crystal panels as shown in FIG. **11** are produced at once.

[0095] FIG. **17** is a cross-sectional view of the large liquid crystal cell in FIG. **16** taken along line C-C.

[0096] FIG. **18** is a cross-sectional view of the large liquid crystal cell in FIG. **16** taken along line D-D.

[0097] FIG. **19**(A) is a plan view showing a pattern of first seal members and dummy seals on the lower large substrate in the large liquid crystal cell shown in FIG. **16**.

[0098] FIG. **19**(B) is a plan view showing a pattern of second seal members and dummy seals on the upper large substrate in the large liquid crystal cell shown in FIG. **16**.

[0099] FIG. **20**(A) is a transparent plan view of a single liquid crystal panel cut from the large substrate in a fourth example according to the second embodiment of the present invention, in which the liquid crystal panel includes upper and lower substrates, and the upper substrate has an extension protruding beyond the associated end of the lower substrate.

[0100] FIG. **20**(B) is a transparent plan view of a single liquid crystal panel cut from the large substrate in the fourth example according to the second embodiment of the present invention, the liquid crystal panel including upper and lower substrates, the lower substrate having an extension protruding beyond the associated end of the upper substrate.

[0101] FIG. **21** is a plan view of a large liquid crystal cell from which the liquid crystal panels shown in FIG. **20**(A) and FIG. **20**(B) can be obtained.

[0102] FIG. **22** is a cross-sectional view showing essential components of the large liquid crystal cell shown in FIG. **21** taken along line E-E.

[0103] FIG. **23** is a cross-sectional view showing essential components of the large liquid crystal cell shown in FIG. **21** taken along line F-F.

[0104] FIG. **24**(A) is a plan view showing a pattern of first seal members and dummy seals on the lower large substrate in the large liquid crystal cell shown in FIG. **21**.

[0105] FIG. **24**(B) is a plan view showing a pattern of second seal members and dummy seals formed on the upper large substrate in the large liquid crystal cell shown in FIG. **21**.

[0106] FIG. **25**A shows a first embodiment of a columnar spacer placed on a large substrate.

[0107] FIG. **25**(B) shows a second embodiment of a columnar spacer placed on a large substrate.

[0108] FIG. **26** shows spacers disposed between the upper and lower large substrates.

[0109] FIG. **27** is a transparent plan view showing a plurality of panels formed in a conventional large substrate.

[0110] FIG. **28** is a cross-sectional view of one of the panels shown in FIG. **27** taken along line A-A.

[0111] FIG. **29** is a transparent plan view showing part of the large substrate in FIG. **27** to illustrate a problem in the conventional art.

[0112] FIG. **30** shows a conventional pattern of seals disposed on the substrate.

[0113] FIG. **31** is a transparent plan view of a liquid crystal panel showing a seal, its port sealing resin, and other components.

[0114] FIG. **32** is a cross-sectional view of the liquid crystal panel in FIG. **31** taken along line G-G.

[0115] FIG. **33** is a cross-sectional view of the liquid crystal panel in FIG. **31** taken along line H-H.

[0116] FIG. **34** is a transparent plan view of a large liquid crystal cell from which a large number of liquid crystal panels are produced, showing the state of the liquid crystal cells before they are filled with a liquid crystal.

[0117] FIG. **35**(A) is a plan view of a lower large substrate in the large liquid crystal cell, with seals disposed in a pattern thereon.

[0118] FIG. **35**(B) is a plan view of an upper large substrate in the large liquid crystal cell, with no seals disposed thereon.

BEST MODE OF PRACTICING THE INVENTION

[0119] A first embodiment of the present invention will now be described with reference to FIGS. **1** to **10**.

First Example

[0120] FIG. **1** is a transparent plan view showing some of the panels formed on two opposed substrates forming a large substrate, showing how a plurality of liquid crystal panels are obtained from the large substrate.

[0121] As shown in FIG. **1**, the large substrate includes a plurality of panels (empty panels not filled with an electro-optical conversion member) **20-3**, **20-4**, **20-5**, . . . , **20-13**, **20-14**, . . . , **20-23**, **20-24**, . . . arranged in a matrix (an arbitrary one of these panels will be referred to hereinafter as "panel **20**").

[0122] As shown in FIG. **2**, the large substrate (mother substrate) shown in FIG. **1** includes two mutually opposed substrates: a lower substrate **21**A (referred to hereinafter as

lower large substrate **21**A), and an upper substrate **22**A (referred to hereinafter as upper large substrate **22**A).

[0123] The lower large substrate **21**A and the upper large substrate **22**A are bonded together with frame-shaped seals for the individual panels **20** interposed therebetween. The lower large substrate **21**A and the upper large substrate **22**A face each other with a predetermined gap between them provided by the seals.

[0124] A connection electrode forming section C is provided on an extension C' from the region defined by each frame-shaped seal **27**. Lead wiring and connection electrodes are provided in the connection electrode forming section C. An electro-optical conversion member described below is injected into the region defined by the frame-shaped seal **27**.

[0125] A liquid crystal device is produced from a panel **20** by injecting a liquid crystal as the electro-optical conversion member into the region defined by the frame-shaped seal **27**. As shown in FIG. **2**, transparent electrodes **23** and an oriented film **25** are formed in this order on the lower large substrate **21**A for each panel **20** (before the panel is filled with liquid crystal). Similarly, transparent electrodes **24** and an oriented film **28** are formed in this order on the upper large substrate **22**A for each panel **20**.

[0126] In addition, connection electrodes **29** such as lead wiring electrodes are provided on the connection electrode forming section C for connection to the transparent electrodes **23** on the lower large substrate **21**A and for connection through a transfer structure to the transparent electrodes **24** on the upper large substrate **22**A. Connection electrode forming sections C are present on at least one of the lower and upper large substrates **21**A, **22**A; in FIGS. **1** and **2**, they are present only on the lower large substrate **21**A.

[0127] As shown in FIG. **3**, a rectangular frame-shaped seal **27** has four sides formed by four seal members **27***a*, **27***b*, **27***c*, and **27***d*. Seal members **27***a* and **27***d* are coplanar and mutually facing; seal members **27***b* and **27***c* are likewise coplanar and mutually facing. Seal member **27***a* has a cutout at or near its longitudinal center (or any other location, such as at one end of seal member **27***a*, for example), which, together with projections **27***e* projecting on both sides of the cutout, forms an injection port **27***f*.

[0128] The seal **27** is formed from two types of sealing materials: a first sealing material **27-1**, and a second sealing material **27-2**. The first and second sealing materials **27-1**, **27-2** are both made of a resin adhesive **27***m* containing gap adjustment members (also referred to as spacers) **27***n*. The two types of sealing materials used in the first example contain the gap adjustment members **27***n* in different proportions. For finer gap adjustment, however, the sealing materials used for the individual seal members of the frame-shaped seal **27** may be selected from three or more types of sealing materials containing gap adjustment members **27***n* in different proportions, depending on gap variations, gap irregularities, and so on.

[0129] Among the four seal members **27***a*, **27***b*, **27***c*, and **27***d* of the frame-shaped seal **27**, the seal members **27***a* and **27***d* located adjacent to the extension C' are formed from a sealing material containing a higher proportion of spacers **27***n* than the other two seal members **27***b* and **27***c*. This means that the seal member **27***a* adjacent to the extension C' in FIGS. **1-3** contains a higher density of spacers **27***n* in the adhesive **27***m* than the seal members **27***b* and **27***c* that meet seal member **27***a* at right angles. In the first example, seal members **27***a* and **27***d* contain 3 wt % spacers **27***n*, while seal members **27***b* and **27***c* contain 1 wt % spacers **27***n*.

[0130] FIG. **3** is a transparent view of the single panel **20-14** in the large substrate in FIG. **1**. The seal member **27***d* adjacent to the extension C' (on the lower large substrate **21**A) for the connection electrode forming section C of panel **20-14** and the seal member **27***a* adjacent to the extension C' (on the lower large substrate **21**A) of the panel **20-4** adjacent to panel **20-14** (See FIG. **1**) are formed from the first sealing material **27-1**, containing the higher proportion of spacers **27***n* (a larger number of spacers per unit amount of the adhesive).

[0131] Seal members **27***b* and **27***c* are formed from the second sealing material **27-2**, containing the lower proportion of spacers **27***n* (a smaller number of spacers per unit amount of the adhesive).

[0132] Preferably, the seal contains 0.5-5 wt % spacers. In addition, the first sealing material **27-1** preferably contains 2-3 wt % more spacers than the second sealing material **27-2**.

[0133] The spacers **27***n* may be silica balls, fiberglass balls, plastic balls, or the like. The gap between the lower and upper large substrates **21**A, **22**A is essentially adjusted by the particle size of the spacers **27***n*. If the spacer densities in the individual seal members are also adjusted as in the first example, gap variations and irregularities caused by the seal members can substantially be eliminated.

[0134] The resin adhesive **27***m* may be a thermosetting resin such as an epoxy resin, or an ultraviolet-curing acrylic resin. When a thermosetting resin is used, the seal **27** is cured by heating. When an ultraviolet-curing resin is used, the seal **27** is cured by ultraviolet irradiation. In the first example, the resin adhesive **27***m* is a thermosetting epoxy resin, while the spacers **27***n* are silica balls.

[0135] In FIGS. **1** and **2**, dot-dash lines X**1**, X**2**, X**3**, and Y are cutting lines along which the large substrate (mother substrate) is cut.

[0136] Cutting lines X**1**, X**2**, and X**3** extend in the horizontal direction in FIG. **1**. The large substrate is cut along cutting lines X**1**, X**2** and X**3** into strips each including a plurality of panels **20** arranged in a row.

[0137] Cutting along cutting line X**1** trims the projecting tips of the projections **27***e* located on the two sides of the injection port **27***f* of each seal **27**. Cutting along cutting line X**2** removes an unnecessary portion D of the upper large substrate **22**A covering the connection electrode forming sections C. Cutting along cutting line X**3** finishes each extension C' to a predetermined size. Cutting along cutting lines X**3** and X**1** removes an area K including the projecting tips of each injection port.

[0138] An electro-optical conversion member such as a liquid crystal is injected into the individual panels **20** in the strip obtained by cutting the large substrate along cutting lines X**1**, X**2**, and X**3**, and the injection ports are then sealed to encapsulate the electro-optical conversion member inside individual seals. Then, the strip is cut along cutting lines Y into individual panels **20** to obtain liquid crystal devices (panels filled with the electro-optical conversion member).

[0139] Next, a method of manufacturing individual panels and liquid crystal devices from a large substrate having seals formed from the first and second sealing materials **27-1**, **27-2** containing different proportions of spacers will be described mainly with reference to the flowchart in FIG. **4**, and also with reference to FIG. **5**.

[0140] FIG. **5** shows the patterns in which the seal members of the seal **27** of the panel **20-14** shown in FIG. **3** are formed from the first and second sealing materials on the lower and upper large substrates.

[0141] Step **1**: forming the mother substrates. Oriented films and other components are formed for individual panels on the large substrates (of the mother substrate) according to the panel specifications. The lower and upper large substrates **21**A, **22**A are thus formed.

[0142] The formation of the lower and upper large substrates **21**A, **22**A includes a step of forming transparent electrodes **23**, **24** on large glass substrates (the electrodes are formed by patterning, for example), a step of forming oriented films **25**, **26** thereon and rubbing their surfaces, a step of forming color filters (when required), and steps of forming insulating films and flattening films (these steps form the mother substrates). The lower and upper large substrates **21**A, **22**A may be plastic substrates, instead of glass substrates.

[0143] Step **2**: forming seal members from the first sealing material. Seal members are formed from the first sealing material **27-1** on only the lower large substrate **21**A.

[0144] FIG. **5**(A) shows an opposed pair of seal members **27***a*, **27***d* formed from the first sealing material **27-1** on the lower large substrate **21**A, the seal member **27***a* having projections **27***e* and an injection port **27***f*. As described above with reference to FIG. **3**, the seal members **27***a*, **27***d* disposed on the lower large substrate **21**A are adjacent to extensions C' for connection electrode forming sections C. The first sealing material **27-1** can be applied by screen printing, dispenser coating, inkjet printing, or other means. In the first example, screen printing is used and the thickness of the applied sealing material is two to three times the intended gap width. For example, for a 5 μm gap, the applied sealing material is 10 to 15 μm thick.

[0145] Step **3**: forming seal members from the second sealing material. Seal members are formed from the second sealing material **27-2** on the upper large substrate **22**A.

[0146] FIG. **5**(B) shows a pair of seal members **27***b*, **27***c* formed from the second sealing material **27-2** on the upper large substrate **22**A. The seal members formed from the second sealing material **27-2** are formed by the same method as the seal members formed from the first sealing material **27-1**, described above.

[0147] Step **4**: bonding the substrates together. The lower large substrate **21**A with the seal members **27***a* and **27***d* formed from the first sealing material **27-1** and the upper large substrate **22**A with seal members **27***b* and **27***c* formed from the second sealing material **27-2** are placed together with the first and second sealing materials **27-1** and **27-2** interposed between them. The lower and upper large substrates **21**A, **22**A are placed so that their pixel-forming electrodes are mutually aligned.

[0148] Then, external pressure is applied to the lower and upper large substrates **21**A, **22**A to bond them together and to join the seal members **27***a*, **27***d* of the first sealing material **27-1** to the seal members **27***b*, **27***c* of the second sealing material **27-2**, thereby forming frame-shaped seals **27** as shown in FIG. **3**. The seals **27** thus formed are cured by heat treatment under pressure, whereby the lower and upper large substrates **21**A, **22**A are fastened together with a predetermined gap between them.

[0149] The above pressure is 0.2 to 1 kg/cm^2 and is applied by use of an air bag or other pressurization device. The heat treatment for curing the seals **27** is performed using a baking apparatus at a temperature in the range of 150° C. to 180° C. for 30 to 90 minutes. The heat treatment conducted in the first example is appropriate for seals containing a thermosetting epoxy resin as the resin adhesive **27***m*. If an ultraviolet-curing resin is used, the seals are cured by an ultraviolet irradiation process.

[0150] Step **5**: first cuts. The bonded lower and upper large substrates **21**A, **22**A are cut in a first cutting operation.

[0151] First, the bonded lower and upper large substrates **21**A, **22**A are cut along cutting lines X**3** to obtain strips each including a plurality of panels **20** arranged in a row. Then, one side (near the projections **27**) of each strip defined by adjacent cutting lines X**3** is cut along cutting line X**1** to remove the region K including the projecting tips of the projections **27***e* of each injection port. The upper large substrate **22**A of the strip is then cut along cutting line X**2** to remove the unnecessary region D from the upper large substrate **22**A (See FIG. **2**). When region D is removed from the upper large substrate **22**A, the connection electrodes **29** in the connection electrode forming section C on the lower large substrate **21**A are exposed.

[0152] In the above example, the lower and upper large substrates **21**A, **22**A are cut simultaneously, first along the cutting lines X**3** to obtain strips defined by adjacent cutting lines X**3**, and then along cutting lines X**1**. Alternatively, the lower and upper large substrates **21**A, **22**A may be cut first along both cutting lines X**1** and X**3** to form strips, each defined by the pair of cutting lines X**1** and X**3** located on opposite sides of a cutting line X**2**, and then each strip may be cut along cutting line X**2**.

[0153] The cutting can be performed by scribing, dicing, or other means. Cutting along these cutting lines produces strips each having injection ports **27***f* opening outward and aligned in a row (these strips are strings of empty panels not yet filled with an electro-optical conversion member).

[0154] Step **6**: injecting and encapsulating the electro-optical conversion member. The electro-optical conversion member is injected through the injection ports **27***f* into the individual injection regions B defined by the frame-shaped seals **27** (formed by the seal members **27***a*, **27***b*, **27***c*, and **27***d*). When the injection is completed, the electro-optical conversion member is encapsulated inside each frame-shaped seal **27** by sealing the injection port **27***f*. The liquid crystal used as the electro-optical conversion member in the first example is injected into the plurality of injection regions B all at once using a vacuum injection device. After the liquid crystal is injected, a port sealing member made of a UV-curing resin is applied to the site of each injection port **27***f* and is cured by ultraviolet irradiation to seal the injection ports **27***f* to encapsulate the liquid crystal.

[0155] With this, a plurality of panels are formed in the strip with the electro-optical conversion member encapsulated therein (liquid crystal devices with the liquid crystal encapsulated therein if the electro-optical conversion member is a liquid crystal).

[0156] Step **7**: second cuts. Each strip including a plurality of panels filled with the liquid crystal or another electro-optical conversion member is then cut along cutting lines Y to obtain individual panels (liquid crystal devices).

[0157] The second cuts along cutting lines Y are performed in a manner similar to the first cuts described above. Cutting along cutting lines Y produces individual complete panels (liquid crystal devices). Then, polarizing plates are formed on the upper and lower surfaces of each panel and a flexible

printed circuit board (FPC board) or a driver IC for driving the electro-optical conversion member are placed on the connection electrodes **29** or connection terminals in the connection electrode forming section C (COG: Chip On Glass) to obtain a more functional liquid crystal device

[0158] In this embodiment, as described above, the seal members are formed from two types of sealing materials **27-1**, **27-2** containing different proportions of spacers **27***n* in a resin-based adhesive **27***m*. In each seal, the first sealing material **27-1**, which contains a higher proportion of spacers **27***n* in the resin-based adhesive **27***m*, is used for seal member **27***a*, which is adjacent to the extension C' for the connection electrode forming section C, and the opposite seal member **27***d*. The seal member **27***a* of one panel (for example, panel **20-14** shown in FIG. **1**) is relatively distant from the seal member **27***d* of the next panel (panel **20-4** in FIG. **1**) adjacent across cutting line X**3** because these seal members **27***a* and **27***d* are separated by the connection electrode forming section C and the projecting tip clipping area K.

[0159] Accordingly, these seal members **27***a* and **27***d* are subject to relatively high-pressure during pressure bonding. To resist this externally applied pressure, these seal members **27***a* and **27***d* are formed from the first sealing material, which contains a larger number of spacers **27***n* per unit area.

[0160] By using the first sealing material **27-1** for the seal members **27***a* and **27***d* that are more widely spaced, compared to seal members **27***b* and **27***c*, it is possible to have seal members **27***a* and **27***d* flatten by the same amount as seal members **27***b* and **27***c* and thus to avoid the problem of gap irregularities due to thickness variations in a single panel. More specifically, by increasing the number of spacers **27***n* per unit area, it is possible to make seal members **27***a* and **27***d* more resistant to the externally applied pressure and thus to prevent seal members **27***a* and **27***d* from flattening and becoming thinner than seal members **27***b* and **27***c*.

[0161] Conversely, seal member **27***b* in one panel is close to seal member **27***c* in the adjacent panel. Accordingly, these seal members **27***b* and **27***c* are formed from the second sealing material **27-2**, which contains fewer spacers **27***n* in the resin-based adhesive (i.e., a smaller number of spacers per unit amount of the adhesive).

[0162] For example, seal member **27***b* in a panel **20-14** is close to seal member **27***c* in the right-adjacent panel **20-15**; seal member **27***c* of panel **20-14** is also close to seal member **27***b* in the left-adjacent panel **20-13**. During pressure bonding, the applied pressure acts simultaneously on the two mutually adjacent seal members **27***b* and **27***c* and is accordingly distributed between them. The pressure acting on seal member **27***b* of the one panel and seal member **27***c* of the adjacent panel is therefore reduced and does not greatly flatten these seal members. Accordingly, although being formed from the second sealing material, which contains fewer spacers **27***n* per unit area than the first sealing material, seal members **27***b* and **27***c* can resist the externally applied pressure and do not flatten greatly.

[0163] As described above, two types of sealing materials are used, namely first and second sealing materials **27-1**, **27-2** containing different proportions of spacers **27***n*. By using the first sealing material **27-1**, containing a higher proportion of spacers **27***n*, for the seal members subject to a higher pressure during pressure bonding and the second sealing material **27-2**, containing a lower proportion of spacers **27***n*, for the seal members subject a lower pressure, it is possible to have all the seal members flatten equally and thereby to reduce gap irregularities in the panel.

[0164] Because of the reduced gap irregularities, a panel filled with a liquid crystal as an electro-optical conversion member can display color images with improved image quality, without color unevenness and luminance unevenness. Unlike conventional techniques, no dummy seals are required, so no space needs to be provided for the dummy seals, and smaller substrates can be used, or a larger number of panels can be obtained per substrate, so the manufacturing cost can be reduced. Furthermore, the number of seals can be reduced and thus the material cost can be reduced.

Second Example

[0165] Next, another example of a large substrate and a method of obtaining individual panels from this large substrate will be described with reference to FIGS. **6** to **10**. The second example relates to a method for improving the productivity of aberration correcting liquid crystal panels (liquid crystal devices) by forming a plurality of aberration correcting liquid crystal panels in a large substrate and cutting individual panels from the large substrate (a method of manufacturing multiple panels at once from a large substrate).

[0166] Panels using a liquid crystal as an electro-optical conversion member include, in addition to liquid crystal display panels, aberration correcting liquid crystal panels used in optical pickup devices (panels for optical pickups), liquid crystal shutters used in cameras, and liquid crystal lenses. Since aberration correcting liquid crystal panels, liquid crystal shutters, and liquid crystal lenses are small in size, the manufacturing cost reduction effect of manufacturing methods that obtain many identical panels at once from a single large substrate is increased.

[0167] A typical aberration correcting liquid crystal panel has the basic structure shown in FIG. **7**. The large substrate (mother substrate) includes a lower large substrate **41**A and an upper large substrate **42**A. On the surface of the lower large substrate **41**A facing the upper large substrate **42**A, transparent electrodes **43** and oriented films **45** are formed for the individual panels to be produced. On the surface of the upper large substrate **42**A facing the lower large substrate **41**A, transparent electrodes **44** and oriented films **46** are formed for the individual panels to be produced.

[0168] Next, frame-shaped seals **47** for the individual panels are formed between the lower and upper large substrates **41**A, **42**A. Then, the lower and upper large substrates **41**A, **42**A are bonded together with the seals **47** interposed between them. A liquid crystal (for example, a nematic liquid crystal) **48** is encapsulated inside the individual frame-shaped seals **47** between the lower and upper large substrates **41**A, **42**A.

[0169] On one end of the lower large substrate **41**A, an extension C' projects outside the frame-shaped seal **47**. On the extension C', lead wiring electrodes and connection electrodes **49** are disposed for connection to the transparent electrodes **43** on the lower large substrate **41**A and to the transparent electrodes **44** on the upper large substrate **42**A.

[0170] The lower and upper large substrates **41**A, **42**A are cut into individual panels to obtain individual panels.

[0171] FIG. **6** illustrates how a plurality (twelve in the example shown in FIG. **6**) of panels **40-1**, **40-2**, . . . , **40-24** are cut from the large substrate (mother substrate) formed by bonding the lower and upper large substrates **41**A, **42**A face to face.

[0172] For individual panels **40-1**, **40-2**, . . . , **40-24** (an arbitrary one of these panels will be hereinafter referred to as "panel **40**"), frame-shaped seals **47** and connection electrode forming sections C are formed on the large substrate (mother substrate). Each panel **40** also has a connection electrode forming section C disposed on the extension C' on the lower substrate **41**.

[0173] For each panel **40** to be produced, transparent electrodes **43** are formed on the lower large substrate **41**A, as shown in FIG. **7**, and an oriented film **45** is formed on the transparent electrodes **43**. For each panel **40** to be produced, transparent electrodes **44** are also formed on the upper large substrate **42**A, and an oriented film **46** is formed on the transparent electrodes **44**. The oriented films may be omitted when liquid crystal devices are produced by injecting a polymer dispersed liquid crystal as the electro-optical conversion member into the panels.

[0174] The lower large substrate **41**A has an extension C' extending from each frame-shaped seal **47**. The connection electrode forming section C is located on the extension C'. In the connection electrode forming section C, there are provided lead wiring electrodes and/or wiring electrodes for connection to the pixel-forming transparent electrodes **43** on the lower large substrate **41**A and for connection through a transfer-connection structure to the transparent electrodes **44** on the upper large substrate **42**A, as well as connection electrodes **49** such as connection terminals for electrical connection to a control circuit board and or driver circuit board, which are circuits external to the panel. In the second example, the extension C' and the connection electrode forming section C are provided only on the lower large substrate **41**A.

[0175] The frame-shaped seal **47** for each panel **40** consists of four seal members **47***a*, **47***b*, **47***c*, and **47***d* forming a rectangular or square frame as shown in FIG. **6**. Seal members **47***a* and **47***d* face each other; seal members **47***b* and **47***c* face each other. Seal member **47***a* has an opening at its longitudinal center or thereabout, through which the electro-optical conversion member (liquid crystal) is injected. On both sides of the opening, there are projections **47***e* projecting outward from the rectangular frame. The opening between the projections **47***a* forms an injection port **47***f* through which the liquid crystal is injected.

[0176] The seal **47** formed for this single panel **40** has the same shape and dimensions as the seals **47** for the other panels **40**.

[0177] The seal **47**, like the seal in the first example described above, is formed from two types of sealing materials: a first sealing material **47-1** and a second sealing material **47-2**. The first and second sealing materials **47-1**, **47-2** contain gap adjustment members (spacers) **47***n* in a resin adhesive **47***m*. The first sealing material **27-1** contains a higher proportion of spacers **27***n* than the second sealing material **27-2**.

[0178] In the second example, the first and second sealing materials **47-1**, **47-2** comprise adhesives with the same proportions of spacers as in the first example. The seal accordingly contains 0.5 to 5 wt % spacers. In addition, the first sealing material **47-1** preferably contains 2 to 3 wt % more spacers than the second sealing material **47-2**.

[0179] The horizontal cutting lines X**1**, X**2**, and X**3** and vertical cutting lines Y shown in FIG. **6** are used similarly to the cutting lines X**1**, X**2**, X**3**, and Y in the first example (See FIG. **1**).

[0180] In FIGS. **6** and **7**, cutting along cutting line X**1** trims the projecting tips of the projections **47***e* on both sides of the injection ports **47***f* of seal members **47***a*. Cutting the lower and upper large substrates **41**A, **42**A simultaneously along cutting lines X**1** produces strips each defined by a mutually adjacent pair of cutting lines X**1**. Cutting along cutting lines X**2** trims and removes an unnecessary portion D from the upper large substrate **42**A covering the connection electrode forming sections C. Cutting along cutting lines X**3** finishes the extensions C' to a predetermined size. Cutting along cutting lines X**3** and X**1** removes the area K including the projecting tips of the injection ports.

[0181] Next, a liquid crystal is injected as the electro-optical conversion member through the injection ports into the plurality of panels **40** (empty panels) connected by cutting lines Y in the strip.

[0182] After the liquid crystal is injected, the injection ports of the panels in the strip are sealed.

[0183] The strip is then cut along cutting lines Y to obtain individual panels as shown in FIG. **10**.

[0184] As described above, the liquid crystal or other electro-optical conversion member is injected and encapsulated in the individual panels **40** in the strip obtained by cutting along cutting lines X**1**, X**2**, and X**3**. Then, the strip is cut along cutting lines Y to obtain individual liquid crystal devices (panels **20** filled with the electro-optical conversion member).

[0185] The method of manufacturing the panels in the second example will now be described. The manufacturing steps are essentially the same as in the first example (FIG. **4**). In view of this, the following description of the manufacturing method will focus on steps different from those in the first example and refer to the identical steps only when necessary.

[0186] FIG. **8** shows the seal members formed from the first sealing material **47-1** on the lower large substrate **41**A.

[0187] The seal members **47***a* and **47***d* adjacent to the extension C' (to be used as the connection electrode forming section C) are formed from the first sealing material **47-1** on the lower substrate **41**A. The first sealing material **47-1** is also used to form the seal members **47***a* adjacent to outer edge **41***a* of the lower large substrate **41**A, the seal members **47***b* adjacent to outer edge **41***b*, the seal members **47***c* adjacent to outer edge **41***c*, and the seal members **47***d* adjacent to outer edge **41***d*.

[0188] Since seal members **47***d* of panels **40-1**, **40-2**, **40-3**, and **40-4** are distant from seal members **47***a* of panels **40-11**, **40-12**, **40-13**, and **40-14**, respectively, being separated by the extensions C', these seal members **47***d*, **47***a* are also formed from the first sealing material **47-1**.

[0189] Similarly, since seal members **47***d* of panels **40-11**, **40-12**, **40-13**, and **40-14** are distant from seal members **47***a* of panels **40-21**, **40-22**, **40-23**, and **40-24**, respectively, being separated by the extensions C', these seal members **47***d*, **47***a* are also formed from the first sealing material **47-1**. Furthermore, since seal members **47***d* of panels **40-21**, **40-22**, **40-23**, and **40-24** are adjacent to the extensions C' located therebelow, these seal members **47***d* are also formed from the first sealing material **47-1**.

[0190] Seal members **47***a* of the panels **40-1**, **40-2**, **40-3**, and **40-4**, which are adjacent to outer edge **41***a* of the lower large substrate **41**A and are not close to seal members of other panels, are also formed from the first sealing material **47-1**. Seal members **47***b* of the panels **40-4**, **40-14**, and **40-24**, which are adjacent to outer edge **41***b* of the lower large substrate **41**A and are not close to seal members of other panels,

are also formed from the first sealing material **47-1**. Seal members **47***c* of the panels **40-1**, **40-11**, and **40-21**, which are adjacent to outer edge **41***c* of the lower large substrate **41**A and are not close to seal members of other panels, are also formed from the first sealing material **47-1**. Seal members **47***d* of the panels **40-21**, **40-22**, **40-23**, and **40-24**, which are adjacent to outer edge **41***d* of the lower large substrate **41**A and are not close to seal members of other panels, are also formed from the first sealing material **47-1**.

[0191] As described above, the seal members adjacent to the four outer edges of the lower large substrate **41**A are also formed from the first sealing material **47-1**.

[0192] Accordingly, the seal members adjacent to each extension C' and the seal members adjacent to the four outer edges of the large substrate are formed from the first sealing material **47-1**.

[0193] As described with regard to the first example, the seal members **47***c*, **47***a*, **47***d* shown in FIG. **8** have no immediately adjacent seal members, or no adjacent seal members at all. When the lower and upper large substrates are bonded under pressure to form a large substrate, these seal members **47***c*, **47***a*, **47***d* experience a higher pressure and suffer a larger thickness deformation than other seal members. To make these seal members **47***c*, **47***a*, **47***d* more resistant to the externally applied pressure and reduce their thickness deformation to that of the other seal members, the number of spacers **47***n* per unit area in these seal members **47***c*, **47***a*, **47***d* is increased. The gap between the lower and upper large substrates **41**A, **42**A is thereby kept uniform in the entire area.

[0194] FIG. **9** shows the seal members formed from the second sealing material **47-2** on the upper large substrate **42**A.

[0195] Among the four seal members **47***a*, **47***b*, **47***c*, and **47***d* of the frame-shaped seal **27**, all the seal members other than the seal members **47***a*, **47***c*, **47***d* disposed on the lower large substrate **41**A (See FIG. **8**) are disposed on the upper large substrate **42**A. The upper large substrate **42**A shown in FIG. **9** is then turned upside down and placed on the lower large substrate **41**A shown in FIG. **8**.

[0196] More specifically, as shown in FIG. **9**, the seal members formed from the second sealing material **47-2** and disposed on the upper large substrate **42**A are seal members **47***b* of panels **40-1**, **40-11**, and **40-21**, seal members **47***b* and **47***c* of panels **40-2**, **40-12**, **40-22**, **40-3**, **40-13**, and **40-23**, and seal members **47***c* of panels **40-4**, **40-14**, and **40-24**.

[0197] Since the seal members formed from the second sealing material **47-2** form closely spaced pairs, as can be seen from FIG. **9**, and provide a wider area to receive the externally applied pressure during bonding, the pressure is distributed among the seal members, reducing the pressure applied to the individual seal members. Accordingly, despite having fewer spacers **47***n* per unit area in their sealing material **47-2**, these seal members provide a predetermined resistance or reaction to the externally applied pressure and suffer only slight thickness deformation.

[0198] In the second example, the seal members are made by screen printing as in the first example.

[0199] Thus, the lower and upper large substrates **41**A, **42**A, each having seal members formed thereon, are aligned and bonded face to face under pressure with the seals interposed therebetween. The seal members on the lower and upper large substrates **41**A, **42**A are joined to each other, thereby forming frame-shaped seals **47** as shown in FIG. **6**. The steps of applying pressure and bonding are the same as in the manufacturing method in the first example.

[0200] The resultant mother substrate is then cut along cutting lines X**1**, X**2**, and X**3** to obtain strips each including a plurality of (empty) panels.

[0201] A liquid crystal is injected through the respective injection ports into the plurality of panels in each strip, and then the injection ports are sealed with port sealing members to encapsulate the liquid crystal inside the frame-shaped seals.

[0202] Next, each strip, including the panels filled with the liquid crystal, is cut along cutting lines Y to obtain individual liquid crystal panels or liquid crystal devices as shown in FIG. **10**.

[0203] As described above, the seal **47** is formed from two types of sealing material: a first sealing material **47-1** containing a higher proportion of spacers **47***n* in the adhesive **47***m*, and a second sealing material **47-2** containing a lower proportion of spacers **47***n* in the adhesive **47***m* (fewer spacers per unit amount of the adhesive).

[0204] The first sealing material, containing the higher proportion of spacers **47***n* (more spacers per unit amount of the adhesive), is used to form the seal members that are subject to relatively high pressure, among the four seal members forming each frame-shaped seal. Having a larger number of spacers **47***n* per unit area, these seal members are more resistant to flattening. The seal members that are subject to relatively low pressure are formed from the second sealing material **47-2** containing a lower proportion of spacers **47***n*, i.e., fewer spacers **47***n* per unit area. In this manner, the thickness deformation is adjusted to the same value in all the seal members to obtain a panel with a uniform gap over its entire area. This effectively reduces correction errors and accordingly improves the correction accuracy in the aberration correcting liquid crystal device.

[0205] Instead of forming each seal member entirely of the first or entirely of the second sealing material, depending on its positional relationship with the adjacent seal member, as in the second example, each seal member may be formed partially of the first sealing material and partially of the second sealing material.

[0206] As described above, in the second example, two types of sealing materials are used: a sealing material containing a relatively high proportion of spacers **47***n* and a sealing material containing a relatively low proportion of spacers **47***n*. Alternatively, three or more types of sealing materials containing different proportions of spacers **47***n* may be used according to the amount of flattening of each seal member. This enables a more uniform gap adjustment to be made by preventing gap variations due to different amounts of pressure applied to different seal members.

[0207] According to the present invention, among the seal members of the seals disposed between the lower and upper large substrates forming the large substrate, those subject to a higher pressure are formed from the sealing material containing a higher proportion of spacers **47***n*, to increase the number of spacers **47***n* per unit area. These seal members are therefore more resistant to flattening. Seal members subject to a lower pressure are formed from the sealing material containing a lower proportion of spacers **47***n*, to decrease the number of spacers **47***n* per unit area. These seal members are accordingly less resistant to flattening. Accordingly, the gap irregularities between the upper and lower substrates of one panel can be minimized over the entire area of the panel. As a result,

the error correction accuracy can be improved in the aberration correcting liquid crystal device.

[0208] The present invention is also applicable to circular frame-shaped seals. The first or second sealing material can be selected to form these seals depending on their proximity to other circular frame-shaped seals.

[0209] The first and second examples relate to a liquid crystal display device and a liquid crystal device that use a liquid crystal as an electro-optical conversion member. Substrates having seal members formed from the sealing materials of the present invention are also applicable to touch panels, however.

[0210] From the viewpoint of resistance to heat, moisture, and other conditions, a typical touch panel used for an onboard car navigation system is made of sheet glass or plastic substrates with an intervening gap of approximately 10 μm. If the gap varies significantly in different areas of the panel, the finger pressure required to cause contact will differ in these areas, leading to erroneous panel operations. The seal of the present invention can reduce gap irregularities and thus eliminate the above problem.

[0211] The seals and liquid crystal devices of the present invention can be implemented using either plastic or glass substrates. The present invention is also applicable to EL (electroluminescence) display devices and other devices having an EL material encapsulated between the opposite substrates.

[0212] Next, a second embodiment of the present invention will be described with reference to FIGS. **11**-**24**.

Third Example

[0213] The liquid crystal panel P shown in FIG. **11** includes two substrates: a lower substrate **50** and an upper substrate **60**. The lower substrate **50** has an extension **50**A protruding beyond at least one portion of the outer edges of the upper substrate **60**. The extension **50**A provides a COG (Chip On Glass) area for mounting an integrated circuit (IC) (not shown), but an IC is not necessarily mounted here. An FPC (Flexible Printed Circuit) that connects the liquid crystal panel to an external circuit outside the liquid crystal panel may connected by an anisotropic conductive adhesive to the wiring electrodes on the extension.

[0214] The lower and upper substrates **50**, **60** constituting the liquid crystal panel P are bonded together with seals **30** between them. A seal **30** includes first seal members **30**A, which are disposed at the edge of the upper substrate **60** adjacent to the extension **50**A and the edge opposite to the extension **50**A (the edge on the side of the injection port **32**), and second seal members **30**B, which are disposed at the other two edges of the upper substrate **60**.

[0215] The liquid crystal panel P shown in FIG. **11** will now be described in detail with reference to the cross-sectional views in FIGS. **12** and **13**.

[0216] The liquid crystal panel P includes a lower substrate assembly **50** including a transparent substrate **51** of glass or plastic, for example, as its base member. Transparent electrodes **52** made of ITO (Indium Tin Oxide) are formed by patterning (in an electrode formation step) on the surface of the lower substrate assembly **50** facing the upper substrate assembly **60**. An insulating film **53** is formed on the transparent electrodes **52** (in an insulating film formation step) to prevent the transparent electrodes **52** on the lower substrate assembly **50** and the transparent electrodes **64** on the upper substrate assembly **60** from being electrically short-circuited by dust or foreign particles. Then, an oriented film **54** is formed on the upper surface of the insulating film **53** and rubbed (in steps of forming and rubbing the oriented film).

[0217] The upper substrate assembly **60** faces the lower substrate assembly **50** with a gap therebetween and includes as its base member a transparent substrate **51** made of a transparent material similar to that of the lower substrate assembly **50**. A layer of color filters **62** with red (R), green (G), and blue (B) filters arranged in a striped, matrix, staggered, or other pattern is formed on the lower surface of the upper substrate **51**, facing the lower substrate (in a color filter forming step). A flattening film **63** is formed on the color filters **62** (in a flattening film formation step). Transparent electrodes **64** made of a material similar to that of the transparent electrodes **52** are formed on the flattening film (protection film) **63** (in an electrode forming step). An oriented film **65** is formed on the transparent electrodes **64** and rubbed (in steps of forming and rubbing the oriented film).

[0218] The lower and upper substrate assemblies **50**, **60** are bonded together with seals **30** made of a thermosetting epoxy resin, for example, interposed between them. The gap between the lower and upper substrates assemblies **50**, **60** is adjusted to a predetermined value by means of spacers **31**, i.e., gap adjustment members, mixed into the seals **30** (in step of bonding substrates facing each other).

[0219] A space surrounded by the frame-shaped seal **30** (**30**A, **30**B) shown in FIG. **11** is formed between the lower and upper substrate assemblies **50**, **60** shown in FIGS. **12** and **13**. A liquid crystal is injected into this space as an electro-optical conversion member through the injection port **32** provided in a portion of the seal **30** (in an injection step). After the liquid crystal is injected, the injection port **32** is sealed with port sealing resin **33** to form a liquid crystal layer **70** (in a port sealing step). In the liquid crystal layer **70**, spacers **71** are disposed to adjust the gap between the substrates **10**, **20**, into which the liquid crystal is injected, to a predetermined value (in a step of scattering or emplacing spacers).

[0220] Two types of spacers, differing in particle size, are provided in different parts of the seal **30** disposed in the liquid crystal panel P, as shown in FIG. **14**. The first seal members **30**A of the seal **30** contain first spacers **31**A, shown in FIG. **15**(A), with a particle size (average particle size) d of approximately 9.5 μm (by taking account of the total thickness 3 μm of the color filter and the overcoat, in addition to the diameter of a particle). The second seal members **30**B contain second spacers **31**B, shown in FIG. **15**(B), with a particle size (average particle size) d**1** of approximately 9 μm (by taking account of the total thickness 3 μm of the color filter and the overcoat). The average particle size d**1** of the second spacers **31**B is substantially equivalent to the minor axis of the conventional oblate spacer **131** (gap S**2**) shown in FIG. **32**, for example.

[0221] When the seal **30** (**30**A, **30**B) having the above structure is applied to the liquid crystal panel P as shown in FIGS. **12** and **13**, the gap S between the lower and upper substrate assemblies **50**, **60** at the first seal members **30**A containing the first spacers **31**A (See FIG. **12**) becomes substantially equal to the gap S**1** between the lower and upper substrate assemblies **50**, **60** at the second seal members **30**B containing the second spacers **31**B (see FIG. **13**). Accordingly, the gap in the peripheral area around the display area Z of the liquid crystal panel P shown in FIG. **11** (See FIG. **31**) becomes uniform, thereby preventing the occurrence of luminance unevenness M and improving the display quality. If the

liquid crystal panel P is provided with a backlight (not shown) and a drive circuit, a display device or liquid crystal device with increased display quality and no luminance unevenness M can be obtained.

[0222] The liquid crystal panel P having the above structure can be obtained from a large liquid crystal cell **101**, that is, a large substrate (mother substrate), of the type shown in FIG. **16**. The large liquid crystal cell **101** is first cut along cutting lines X-X**1** (the upper and lower substrates are simultaneously cut along these line) and then cut along cutting lines X**2**-X**3** (only the upper substrate is cut along these lines) to obtain strips each including a plurality of liquid crystal cells (one strip is composed of a plurality of liquid crystal cells connected in a row). Then, a liquid crystal is injected into the plurality of liquid crystal cells in the strip all at once. The injection ports **32** (See FIG. **14**) are then sealed with port sealing resin **33**. Then, the strip including the liquid crystal cells (liquid crystal panels) filled with the liquid crystal is cut along cutting lines Y-Y**1** (the upper and lower substrates are cut simultaneously) using a laser cutting, breaking, or scribing device (not shown). These cutting operations produce a predetermined number of liquid crystal panels **1-1** from the large liquid crystal cell **101** shown in FIG. **16**.

[0223] After the predetermined number of liquid crystal panels **1-1** are cut out, there remain extra unused substrate sections **66** at one and/or both ends of each strip. Dummy seals **35** are formed in the gap between the upper and lower substrates in the extra substrate sections **66** (see FIG. **16**). In the upper large substrate assembly **60** of the large liquid crystal cell **101** shown in FIG. **17**, there also remain unused extra substrate sections **66** facing the extensions **50**A after the predetermined number of liquid crystal panels are cut out.

[0224] The large liquid crystal cell **101** is composed of the lower large substrate assembly **50** and the upper large substrate assembly **60**. The lower large substrate assembly **50** has, as shown in FIGS. **17** and **18**, a transparent substrate **111** as its base material. Transparent electrodes **52** are disposed on the surface **110**F of the transparent substrate **111** facing the upper large substrate assembly **60** (See FIG. **19**(A)). An insulating film **53** is disposed on each transparent electrode **52**. Then, an oriented film **54** having a rubbed surface is formed on each insulating film **53**. The first seal members **30**A, containing the first spacers **31**A with a particle size d of approximately 9.5 μm, and a plurality of dummy seals **35** made of the same sealing material as the first seal members **30**A are formed on the surface **110**F of the lower large substrate assembly **50** as shown in FIG. **16** and FIG. **19**(A).

[0225] The upper large substrate assembly **60** has a transparent substrate **121** as its base material, as shown in FIGS. **17** and **18**. On the surface **120**F of the transparent substrate **121** facing the lower large substrate assembly **50** (see FIG. **19**(B)), color filters **62**, a flattening layer **63**, and transparent electrodes **52** are formed in this order, and an oriented film **64** is also formed and rubbed. On the surface **120**F of the upper large substrate assembly **60**, the second seal members **30**B, containing the second spacers **31**B with a particle size d**1** of approximately 9.0 μm, as well as a plurality of dummy seals **35** formed from the same sealing material as the second seal members **30**B, are formed as shown in FIG. **16** and FIG. **19**(B).

[0226] As shown in FIG. **19**(A) and FIG. **19**(B), the lower and upper large substrate assemblies **50**, **60** are bonded together with the seals **30** and dummy seals **35** between them to form the large liquid crystal cell **101** (step of bonding substrates face to face). The dummy seals **35** are provided to make the density of seal members formed from the second sealing material used in the second seal members **30**B along the outer edges of the large substrate equal to the density of the seal members formed from the sealing material used in the second seal members **30**B in other areas when the lower and upper large substrate assemblies **50**, **60** are bonded together. The dummy seals **35** keep the pressure applied to the peripheral parts of the large substrate equal to the pressure applied to the center of the large substrate when the lower and upper large substrates **50**, **60** are bonded together. Accordingly, the gap becomes uniform in the peripheral parts of the display area Z of the liquid crystal panel P shown in FIG. **11**, thereby more effectively preventing the occurrence of luminance unevenness and improving the display quality.

Fourth Example

[0227] In the fourth example, which relates to a liquid crystal panel for a monochrome display, a larger number of liquid crystal cells or liquid crystal panels can be cut from the large liquid crystal cell than in the third example. The fourth example will now be described with reference to FIGS. **20** to **24**. Structures and members identical to those in the third example will be denoted by the same reference characters and will not be further referred to.

[0228] The liquid crystal panels include a first liquid crystal panel **1-1** shown in FIG. **20**(A) and a second liquid crystal panel **1-2** shown in FIG. **20**(B). The first liquid crystal panel **1-1** has a lower substrate **50-1** and an upper substrate **60-1**; the second liquid crystal panel **1-2** has a lower substrate **50-2** and an upper substrate **60-2**.

[0229] An extension **60**A extends from one end of the upper substrate **60-1** of the first liquid crystal panel **1-1**, while an extension **50**A extends from one end of the lower substrate **50-2** of the second liquid crystal panel **1-2**. The extension **60**A of the upper substrate **60-1** of the first liquid crystal panel **1-1** protrudes over the extension **50**A of the lower substrate **50-2** of the second liquid crystal panel **1-2**, the upper and lower substrates **60-1**, **50-2** being spaced apart horizontally.

[0230] The structure of the first liquid crystal panel **1-1** will now be described with reference to FIG. **20**(A).

[0231] The lower substrate **50-1** in the first liquid crystal panel **1-1** has transparent electrodes **52** formed, by patterning, on the surface facing the upper substrate **60-1**. An insulating film **53** is disposed on the transparent electrodes **52**. A rubbed oriented film **54** is disposed on the upper surface of the insulating film **53**. The upper substrate **60-1** in the first liquid crystal panel **1-1** has transparent electrodes **64** on the surface facing the lower substrate **50-1**. An insulating film **67** is disposed on the transparent electrodes **64**. The insulating film **67** may be omitted, because of the insulating film **53** provided on the lower substrate **50-1**. A rubbed oriented film **65** is disposed on the insulating film **67**.

[0232] In the fourth example, which relates to a monochrome display instead of the color display described above, no color filter is disposed on the upper substrate **60-1**. Spacers **71** are disposed in the liquid crystal layer **70** to maintain a uniform gap.

[0233] The structure of the second liquid crystal panel **1-2** will now be described with reference to FIG. **20**(B).

[0234] The lower substrate **50-2** in the second liquid crystal panel **1-2** has transparent electrodes **52** formed, by patterning, on the surface facing the upper substrate **60-2**. An insulating film **53** is disposed on the transparent electrodes **52**. A rubbed

oriented film **54** is disposed on the upper surface of the insulating film **53**. The upper substrate **60-2** in the second liquid crystal panel **1-2** has transparent electrodes **64** on the surface facing the lower substrate **50-2**. An insulating film **67** is disposed on the transparent electrodes **64**. The insulating film **67** may be omitted, because of the insulating film **53** provided on the lower substrate **50-2**. A rubbed oriented film **65** is disposed on the upper surface of the insulating film **67**.

[0235] In the fourth example, which relates to a monochrome display instead of the color display described above, there is no color filter on the upper substrate **60-2**. Spacers **71** are disposed in the liquid crystal layer **70** to maintain a uniform gap.

[0236] The lower and upper substrates **50-1**, **60-1**, constituting the first liquid crystal panel **1-1** in FIG. **20**(A), are bonded together with seals **30** interposed between them. The rectangular frame-shaped seal **30** disposed in the first liquid crystal panel **1-1** includes a first seal member **30**A neighboring the extension **20**A, and three second seal members **30**B.

[0237] An injection port **32** is provided in either one of the two seal members meeting the first seal member **30**A at a right angle (see FIG. **21**). A liquid crystal is injected through the injection port **32** and the injection port **32** is then sealed by port sealing resin **33** to form a liquid crystal layer **70**. Spacers **71** are disposed in the liquid crystal layer **70** to maintain a uniform gap. In this embodiment, the liquid crystal injection port **32** is located in the seal member on one of the lateral edges of the liquid crystal panel **1-1**.

[0238] The lower and upper substrates **50-2**, **60-2** constituting the second liquid crystal panel **1-2** in FIG. **20**(B) are bonded together with the seal **30** interposed between them. The rectangular frame-shaped seal **30** disposed in the second liquid crystal panel **1-2** includes a first seal member **30**A neighboring the extension **50**A, and three second seal members **30**B.

[0239] An injection port **32** is provided in either one of the two seal members meeting the first seal member **30**A at a right angle. A liquid crystal is injected through the injection port **32** and the injection port **32** is then sealed by port sealing resin **33** to form a liquid crystal layer **70**.

[0240] FIG. **22** is a cross-sectional view of two vertically adjacent liquid crystal panels (first and second liquid crystal panels **1-1**, **1-2**) cut from the large liquid crystal cell **101-1** shown in FIG. **21**, taken along a line near the extensions **50**A, **60**A. As can be seen from this figure, the extension **60**A (to the left of cutting line X**2**-X**3**) of the upper substrate **60-1** of the first liquid crystal panel **1-1** is located over the extension **50**A (to the right of cutting line X**4**-X**5**) of the lower substrate **50-2** of the second liquid crystal panel **1-2**. The seal members neighboring the extensions **60**A, **50**A of the first and second liquid crystal panels **1-1**, **1-2** are both first seal members **30**A.

[0241] FIG. **23** is a cross-sectional view of two horizontally adjacent first liquid crystal panels **1-1** cut from the large liquid crystal cell **101-1** shown in FIG. **21**, taken along a line in the area where these panels are horizontally adjacent. The upper substrate **60-1** of the liquid crystal panel **1-1** on the left is separated along cutting line Y-Y**1** from the upper substrate **60-2** of the liquid crystal panel **1-1** on the right; the lower substrate **50-1** of the liquid crystal panel **1-1** on the left is separated along the same cutting line Y-Y**1** from the lower substrate **50-2** of the liquid crystal panel **1-1** on the right. Since the edges of the first and second liquid crystal panels **1-1**, **1-2** closely approach each other (with no extension interposed between them) along cutting line Y-Y**1**, the seal members adjacent to these edges are second seal members **30**B.

[0242] The first and second liquid crystal panels **1-1**, **1-2** having the above structures are produced as follows.

[0243] The lower and upper substrates constituting the large liquid crystal cell **101-1** are bonded together with the electrodes provided thereon facing each other. After the substrates are bonded together, the lower and upper substrates constituting the large liquid crystal cell **101-1** are cut simultaneously along cutting lines Y-Y**1**, as shown in FIG. **21**, using a laser, scribing, or breaking device (not shown). This cutting (separation) produces (rectangular) strips each including a row of liquid crystal cells.

[0244] A plurality of injection ports **32** are aligned in a row on one edge of each strip. The injection ports **32** are brought into contact with a liquid crystal reservoir to inject a liquid crystal by vacuum injection into all the cells in the strip at once. This completes the step of injecting a liquid crystal. After the liquid crystal is injected, the injection ports **32** are sealed with port sealing resin **33** in a step of sealing the liquid crystal injection ports.

[0245] To obtain individual liquid crystal panels (liquid crystal cells filled with the liquid crystal) from the strip, each strip extending parallel to cutting lines Y-Y**1** is cut along cutting lines X-X**1**, X**2**-X**3**, and X**4**-X**5**, which are perpendicular to cutting lines Y-Y**1**, in a step of simultaneously cutting the upper and lower substrates constituting the strip in the X direction. This cutting is performed using a cutting device such as a laser cutting, scribing, breaking, or dicing device.

[0246] In this manner, a plurality of first and second liquid crystal panels **1-1**, **1-2** are obtained from the large liquid crystal cell **101-1**.

[0247] After the large liquid crystal cell **101-1** shown in FIG. **21** is cut and separated into a plurality of liquid crystal cells (liquid crystal cells filled with a liquid crystal, which become the first liquid crystal panels **1-1** or second liquid crystal panels **1-2**), there remain extra substrate sections **66-1**, **66-2** along the outer edges of the large liquid crystal cell **101-1** which do not form parts of actual liquid crystal panels. Dummy seals **35** are provided between the upper and lower substrates in extra substrate sections **66-1**, as described in the third example.

[0248] The large liquid crystal cell **101-1** in FIG. **21** is composed of the lower substrate (referred to hereinafter as lower large substrate **101-2**) in FIG. **24**(A) and the upper substrate (referred to hereinafter as upper large substrate **201-2**) in FIG. **24**(B).

[0249] The second seal members **30**B disposed on the surface **101-2**F of the lower large substrate **101-2** in FIG. **24**(A) facing the upper large substrate **201-2**, contain second spacers **31**B with an average particle size d of approximately 6.0 μm. The same sealing material is used for the dummy seals **35** disposed on this surface **101-2**F as for the second seal members **30**B.

[0250] The first seal members **30**A disposed on the surface **201-2**F of the upper large substrate **201-2** shown in FIG. **24**(B) facing the lower large substrate **101-2** contain first spacers **31**A with an average particle size d of approximately 6.5 μm. The same sealing material is used for the dummy seals **35** disposed on this surface **201-2**F as for the first seal members **30**A.

[0251] The seals disposed on the lower large substrate **101-2** accordingly contain spacers with a particle size differ-

ent from the particle size of the spacers disposed on the upper large substrate **201-2**. In the fourth example, the seals disposed on the upper large substrate contain spacers with a smaller particle size than the seals disposed on the lower large substrate.

[0252] The liquid crystal panels **1-1**, **1-2** having the above structure in the fourth example, in addition to providing the same effects as in the third example, allow a larger number of liquid crystal panels to be obtained from large substrates of liquid crystal or large substrates because the extensions **20**A of liquid crystal panels **1-1** and the extensions **50**A of the liquid crystal panels **1-2** are formed separately, in a vertically overlapped arrangement. Accordingly, the number of extra substrate sections not actually used in the panels is dramatically reduced as compared with the case of the first embodiment. This leads to a reduction in production cost and thus in panel price.

[0253] Furthermore, the problem of luminance unevenness is solved and the display quality or panel quality is improved.

[0254] In the fourth example, since the seals are formed by printing, seal members **30**A and **30**B are printed separately on the upper and lower substrates. If the seals are formed by dispensing in this embodiment, however, all the seal members **30**A and **30**B can be formed on either one of the upper and lower substrates without the need to apply sealing material separately to the upper and lower substrates. When the seal members **30**A and **30**B are formed on just one of the upper and lower substrates, the seal members **30**A and **30**B are disposed in, for example, the pattern shown in FIG. **35**(A) and FIG. **35**(B). To put spacers with different particle sizes in the proper sealing areas, a scatter mask is set when the spacers are scattered. Use of such masks enables predetermined spacers to be scattered onto predetermined areas.

[0255] The oriented film, which is used for the liquid crystal cell in the fourth example, may be omitted when the present invention is applied to a PN (polymer network) liquid crystal.

[0256] Although polarizing plates are added to the completed liquid crystal panel, the polarizing plates may be omitted in a completed PN liquid crystal panel.

[0257] Although a liquid crystal is used as the electro-optical conversion member in the second embodiment, an EL (electroluminescence) element may be used instead; the same effects are obtained as in the case where a liquid crystal is used.

[0258] The second embodiment is also applicable to the following liquid crystal panels or liquid crystal devices.

[0259] The substrate may be a plastic substrate, instead of a glass substrate. The liquid crystal device is not limited to the transmissive type and may be a reflective or semi-transparent liquid crystal device. The liquid crystal device may be an active-matrix liquid crystal device using TFT, MIM, or other active elements, instead of a passive-matrix liquid crystal device. The liquid crystal device may be a static liquid crystal device, instead of a matrix-type liquid crystal device.

[0260] Although in this embodiment each seal member of the frame-shaped seal contains throughout its entire area spacers having the same particle size, some parts of a seal member may contain spacers with a particle size different from the particle size in other parts of the same seal member.

[0261] A third embodiment of the present invention will now be described with reference to FIGS. **25**A, **25**B, and **26**.

[0262] In the first and second embodiments described above, the gap between the lower and upper large substrates is regulated with spherical spacers.

[0263] In the third embodiment, columnar spacers having a rectangular, square, trapezoidal, or triangular cross section as shown in FIG. **25**A or **25**B are used as the gap adjustment members, at least in areas where the seals are placed, and insulating adhesive members are used to cover the columnar gap adjustment members.

[0264] The gap adjustment members are not limited to columnar members, so the gap adjustment members will be referred to hereinafter as fixed spacers. From the viewpoint of manufacture, however, the gap adjustment members are preferably columnar.

[0265] First, columnar spacers of fixed type are formed in the areas where the seals are to be disposed. Then, insulating adhesive resin members capable of covering the fixed spacers are also formed in the areas where the seals are to be disposed. Seals are thereby formed, with fixed spacers included therewithin. The fixed spacers may also be disposed in areas where the seals are not formed.

Fifth Example

[0266] In the fifth example, the gap between the lower and upper large substrates **21**A, **22**A (see FIG. **2**) is adjusted by the height of the columnar spacers **57** as shown in FIG. **25**A or **25**B.

[0267] This gap can also be adjusted by controlling the density of the fixed spacers (i.e., the number of fixed spacers) in areas where the seals will be formed. The densities of fixed spacers in different areas where seals are to be formed can be compared with reference to a value obtained by multiplying the number of fixed spacers per unit area of the seal by the cross-sectional area of one fixed spacer and dividing the product by the unit area of the seal.

[0268] Other reference values that may be used to compare the density of fixed spacers in different areas where seals are formed include the number of fixed spacers per unit area in which the seals are formed, the height of the fixed spacers in the unit area in which the seals are formed (a difference in this height refers to a difference in the height of the fixed spacers before bonding), or the cross-sectional area of fixed spacers per unit area in which the seals are formed (a difference in this cross-sectional area may refer to a difference in the cross-sectional area of the fixed spacers before bonding, or a set of conditions that changes the cross-sectional area of the fixed spacers after bonding). A combination of these reference values may also be used.

[0269] The gap irregularities between the upper and lower substrates constituting a panel can be eliminated and the panel thickness be made uniform over the entire area of the panel by placing fixed spacers in at least the areas occupied by the seals according to a predetermined arrangement as described above.

[0270] The fifth example will now be described with reference to FIG. **3**, which is a transparent view of a single panel **20-14** in the large substrate in FIG. **1**.

[0271] The first sealing material **27-1**, which contains a higher density of fixed spacers **57** (a larger number of fixed spacers per unit area of the seal area) is used to form the seal member **27***d* adjacent to the extension C' (on the lower large substrate **21**A) for the connection electrode forming section C of panel **20-14**, and the seal member **27***a* adjacent to the extension C' of the panel **20-4** adjacent to panel **20-14**.

[0272] The second sealing material **27-2**, which contains a lower density of fixed spacers **57** per unit area (the second sealing material **27-2** contains fewer fixed spacers per unit area than the first sealing material **27-1**) is used to form seal members **27***b* and **27***c*.

[0273] By placing the fixed spacers in this manner, for the same reason as discussed in the first embodiment, it is possible to prevent irregularities in the gap between the upper and lower substrates in different parts of the panel. More specifically, since seal member **27***a* is relatively distant from seal member **27***d* of the panel adjacent to seal member **27***a*, these seal members are subject to relatively high pressure when the upper and lower substrates are bonded together under pressure; the first sealing material, which contains a higher density of fixed spacers and/or taller fixed spacers and/or fixed spacers having a larger cross-sectional area, is therefore used for these seal members **27***a* and **27***d* to make them more resistant to the externally applied pressure.

[0274] This solves the problem of gap irregularities in different areas of the panel, which occurs if seal members **27***a* and **27***d* flatten more than the other seal members (**27***b* and **27***c*) in the same panel, making the corresponding gaps narrower than the gaps at seal members **27***b* and **27***c*.

[0275] The liquid crystal panel in the fifth example according to the present invention is characterized in that substrates are bonded face to face with a frame-shaped seal containing gap adjustment members interposed therebetween, at least one of the substrates has at least one outer edge that extends beyond the associated outer edge of the other substrate, a liquid crystal is encapsulated inside the frame-shaped seal, and the seal member adjacent to the extending edge contains more fixed spacers than another seal member. The basic structures by which these features are obtained can be systematically summarized as follows.

[0276] 1-1. The density of spacers is changed in different seal areas.

[0277] 1-1-1. The number of spherical spacers per unit area of the seal is changed.

[0278] 1-1-1-1. The spacers are spherical and have the same diameter. The spherical spacers are elastic or flexible.

[0279] 1-1-1-2. The spacers are spherical and have different diameters. The spherical spacers are elastic or flexible.

[0280] 1-2. The density of fixed spacers is changed in different seal areas.

[0281] 1-2-1. The density of fixed spacers is changed in different seal areas by changing the number of fixed spacers per unit area of the seal.

[0282] 1-2-1-1. The number of spacers is changed as in 1-2-1 above, using fixed spacers with the same cross-sectional area parallel to the substrate surface before the substrates are bonded face to face.

[0283] 1-2-1-2. The number of spacers is changed as in 1-2-1 above, using fixed spacers with different cross-sectional areas parallel to the substrate surface before the substrates are bonded face to face.

[0284] 1-2-1-3. The number of spacers is changed as in 1-2-1 above, using fixed spacers with the same cross-sectional area parallel to the substrate surface after the substrates are bonded face to face.

[0285] 1-2-1-4. The number of spacers is changed as in 1-2-1 above, using fixed spacers with different cross-sectional areas parallel to the substrate surface after the substrates are bonded face to face.

[0286] 1-2-2. The total cross-sectional area (cross-sectional area parallel to the substrate) of the fixed spacers disposed per unit area of the seal, the a real density, is changed so that the arrangement density of the fixed spacers in the seal area is changed.

[0287] 1-2-2-1. The fixed spacers used in 1-2-2 above have generally (or substantially) identical cross-sectional areas parallel to the substrate surface before the substrates are bonded face to face. The cross-sectional area before or after the substrates are bonded face to face may be used as the cross-sectional area of the fixed spacers; the cross-sectional area to be used may be determined experimentally. To reduce the cost of manufacture, it is preferable to use spacers having generally (or substantially) identical cross-sectional areas parallel to the substrate surface before the substrates are bonded face to face.

[0288] 1-2-2-2. The fixed spacers used in 1-2-2 above have different (or substantially different) cross-sectional areas parallel to the substrate surface before the substrates are bonded face to face. The cross-sectional area before or after the substrates are bonded face to face may be used as the cross-sectional area of the fixed spacers; the cross-sectional area to be used may be determined experimentally. To reduce the cost of manufacture, it is preferable to use spacers having different (or substantially different) cross-sectional areas parallel to the substrate space before the substrates are bonded face to face.

[0289] The panel according to the third embodiment in the fifth example can be produced by a method similar to the panel described in the first embodiment with reference to the FIG. **4**.

[0290] In the fifth example, as in the first and second embodiments, the first seal material (containing a relatively large number or high density of fixed spacers per unit area of the seal area) and the second sealing material (containing a relatively small number or low density of fixed spacers disposed per unit area of the seal area) can both be deposited at the same time on the same one of the upper and lower large substrates constituting the large substrate, resulting in reduced production cost.

Sixth Example

[0291] In the sixth example, the gap adjustment members are fixed spacers.

[0292] If adjacent seal members of the first and second liquid crystal panels **1-1**, **1-2** are distant from each other as in FIG. **22**, these seal members are formed from a first sealing material, which contains fixed spacers having a large cross-sectional area. If adjacent seal members of the first and second liquid crystal panels **1-1**, **1-2** are close to each other as in FIG. **23**, these seal members are formed from a second sealing material, which contains fixed spacers having a small cross-sectional area.

[0293] When adjacent seal members are relatively distant from each other as in FIG. **22**, the seal members are subject to relatively high external pressure during pressure bonding.

[0294] In the sixth example, however, these seal members contain fixed spacers having relatively large cross-sectional areas and accordingly are highly resistant to flattening.

[0295] Accordingly, the amount of flattening of these seal members is substantially equal to the amount of flattening of seal members that are close to each other and contain fixed

spacers having relatively small cross-sectional areas as in FIG. **23**. As a result, individual panels are produced with a uniform panel thickness.

[0296] In the sixth example, a large substrate can be produced by forming first seal members (disposed in predetermined seal areas and containing fixed spacers **57** having a relatively large cross-sectional area) and second seal members (disposed in predetermined seal areas and containing fixed spacers **57** having a relatively small cross-sectional area) simultaneously on one of the upper and lower large substrates constituting the large substrate, resulting in reduced production cost.

[0297] Individual liquid crystal panels can be produced from a large substrate including upper and lower large substrates, on one of which the first seal members (containing fixed spacers **57** having a relatively large cross-sectional area) are disposed and on the other one of which the second seal members (containing fixed spacers **57** having a relatively small cross-sectional area) are disposed, leading to a reduction in production cost.

[0298] Next, a method of manufacturing the fixed spacers will be described.

[0299] (1) An active matrix substrate is formed by forming a matrix of switching elements such as thin-film transistors (TFT) and gate electrodes, source electrodes, and pixel electrodes wired to the switching elements on a lower large substrate (lower mother substrate) **21**A (see FIG. **2**) having a plurality of panel elements, each panel element corresponding to one panel.

[0300] (2) A photosensitive resin for creating fixed spacers is applied by spin coating onto the active matrix substrate. A positive acrylic resin, a polyimide-based photosensitive resin, or some other type of photosensitive resin may be used. The fixed spacers are formed in areas where seals are to be formed, outside the display area. The fixed spacers may also be formed in the display area.

[0301] (3) A pattern exposure process is performed with an ultraviolet light using a mask pattern.

[0302] (4) Unnecessary resin is removed using a developer and the active matrix substrate is heated to cure the fixed spacers **57** formed from the resin.

[0303] The fixed spacers **57** can be produced with a single exposure, because the height of the fixed spacers and the size of their cross-sectional area (the width of the fixed spacers) can be adjusted by the amount of photosensitive resin applied, the thickness of the photosensitive resin film, and the sizes and shapes of openings in the mask pattern in steps (1) to (4) above. Furthermore, fixed spacers in various shapes can be produced at the same time, so the problems of gap irregularities between the upper and lower substrates, unevenness of the liquid crystal layer thickness, and unevenness of the seal thickness can be easily, accurately, and inexpensively solved.

[0304] Next, a polyimide-type oriented film is applied by a technique such as printing or spin-coating on the active matrix substrate having the fixed spacers **57** disposed thereon.

[0305] The oriented film is baked at 180° C. and then rubbed.

[0306] In the next step for producing liquid crystal panels, a resin sealing adhesive is applied to one of the upper and lower large substrates and the upper and lower large substrates are bonded face to face with seals interposed between them to form a large substrate.

[0307] The resultant large substrate is cut into strips each having injection ports arranged in a row along a longitudinal edge of the strip (when a single panel is obtained from the resultant large substrate, or two or three panels are obtained from the resultant large substrate, the large substrate need not be cut into strips).

[0308] A liquid crystal is injected into individual panels in the strip through the respective injection ports.

[0309] After the liquid crystal is injected, the injection ports of the panels in the strip are sealed.

[0310] The strip is then cut to obtain individual panels.

[0311] Although the fixed spacers are formed on the lower large substrate in the above description, the fixed spacers may be formed on the upper large substrate.

[0312] The curing temperature of the oriented film, the curing temperature of the photosensitive resin for the fixed spacers, and the ultraviolet irradiation time and temperature should be determined from the specifications of the materials used.

[0313] With reference to FIGS. **10** and **15**, the liquid crystal panel in the fourth embodiment of the present invention can be described as follows. The liquid crystal panel has a structure similar to that shown in FIG. **10**, including upper and lower substrates bonded face to face with a gap between them, the gap being defined by elastic spacers elastically deformable from the state shown in FIG. **15**(A) to the state shown in FIG. **15**(B) under pressure; a liquid crystal layer is encapsulated by a seal disposed in the gap; the liquid crystal panel is characterized in that the upper and lower substrates have a first end where an extension C' provided at one end of the lower substrate protrudes beyond the associated end of the upper substrate (i.e., the outer edges of the upper and lower substrates are not substantially aligned with each other, because one of the upper and lower substrates projects beyond the other substrate when the two substrates are bonded together), and a second end where the both ends of the two substrates are aligned with each other (i.e., the outer edges of the upper and lower substrates are substantially aligned with each other, because neither of the upper and lower substrates projects beyond the other substrate when the two substrates are bonded together, i.e., no extension is formed), the seal is disposed along the outer edges of one of the two substrates, the spacers are disposed in or near the area occupied by the seal, the spacers disposed near the first end form a first spacer structure, the spacers disposed near the second end form a second spacer structure, and the first spacer structure is more resistant than the second spacer structure to pressure applied to the two substrates, making the gap resistant to compression.

1-29. (canceled)

30. A method of manufacturing a liquid crystal panel, comprising at least the steps of:

forming mother substrates by separately forming a first substrate and a second substrate;

forming seal members;

bonding said first and second substrates together face to face with frame-shaped seals formed from the seal members interposed therebetween to frame a plurality of regions corresponding to individual panels;

injecting and encapsulating a liquid crystal as an electro-optical conversion member inside said seals; and

cutting the bonded first and second substrates;

wherein, if a side of the frame formed by the seal in one panel is distant from a side of the frame formed by the seal in an adjacent panel so that these two seals are widely spaced, the seal members constituting these sides

are formed into first structure from a sealing material containing gap adjustment members;

wherein, if a side of the frame formed by the seal in one panel is close to a side of the frame formed by the seal in an adjacent panel when said first and second substrates are bonded in said step of bonding, the seal members constituting these sides are formed into second structure from a material containing gap adjustment members; and

wherein said first structure is more resistant to pressure applied to said two substrates than said second structure, whereby said first and second structures make said gap resistant to compression.

31. The method of manufacturing a liquid crystal panel according to claim **30**, wherein said sealing material in said first structure contains a relatively high proportion of said gap adjustment members, and said sealing material in said second structure contains a relatively low proportion of said gap adjustment members.

32. The method of manufacturing a liquid crystal panel according to claim **31**, wherein said gap adjustment members are spherical, cylindrical or prismatic.

33. The method of manufacturing a liquid crystal panel according to claim **30**, wherein said sealing material in said first structure contains spherical or cylindrical spacers having a relatively large diameter as the gap adjustment members, and said sealing material in said second structure contains spherical or cylindrical spacers having a relatively small diameter as the gap adjustment members.

34. The method of manufacturing a liquid crystal panel according to claim **30**, wherein said sealing material in said first structure contains cylindrical or prismatic spacers as the gap adjustment members having a relatively large cross-sectional area parallel to the surface of liquid crystal panel, and said sealing material in said second structure contains cylindrical or prismatic spacers as the gap adjustment members having a relatively small cross-sectional area parallel to the surface of liquid crystal panel.

35. The method of manufacturing a liquid crystal panel according to claim **30**, further comprising the step of providing a dummy seal outside a seal closest to a peripheral part of said first and/or second substrate, at a distance from said seal equal to a distance between two adjacent seals in another area.

36. The method of manufacturing a liquid crystal panel according to claim **30**, wherein said first or said second substrate has an extension for a connection electrode, the extension extending outward from one frame formed by the seal, and the two seal members disposed on both sides of the extension are said first structure.

37. A large substrate for producing a plurality of panels, the large substrate being formed by bonding first and second substrates together with seals interposed therebetween to form a plurality of regions corresponding to individual panels;

wherein said seals are frame-shaped, each seal framing one panel, and if a side of the frame formed by the seal in one panel is distant from a side of the frame formed by the seal in an adjacent panel, so that the two seals are widely spaced, the mutually adjacent sides of the widely spaced seals are formed into first structure from a sealing material containing gap adjustment members, and if a side of the frame formed by the seal in one panel is close to a side of the frame formed by the seal in an adjacent panel, so that the seals are narrowly spaced, the mutually adjacent sides of the narrowly spaced seals are formed into second structure from a sealing material containing a relatively low proportion of gap adjustment members,

and wherein said first structure is more resistant to pressure applied to said two substrates than said second structure, whereby said first and second structures make said gap resistant to compression.

38. The large substrate for producing a plurality of panels according to claim **37**, wherein said sealing material in said first structure contains a relatively high proportion of said gap adjustment members, and said sealing material in said second structure contains a relatively low proportion of said gap adjustment members.

39. The large substrate for producing a plurality of panels according to claim **38**, wherein said gap adjustment members are spherical, cylindrical or prismatic.

40. The large substrate for producing a plurality of panels according to claim **37**, wherein said sealing material in said first structure contains spherical spacers having a relatively large diameters as the gap adjustment members, and said sealing material in said second structure contains spherical spacers having a relatively small diameters as the gap adjustment members.

41. The large substrate for producing a plurality of panels according to claim **37**, wherein said sealing material in said first structure contains cylindrical or prismatic spacers as the gap adjustment members having a relatively large cross-sectional area parallel to the surface of liquid crystal panel, and said sealing material in said second structure contains cylindrical or prismatic spacers as the gap adjustment members having a relatively small cross-sectional area parallel to the surface of liquid crystal panel.

42. The large substrate for producing a plurality of panels according to claim **37**, wherein a dummy seal is provided outside a seal closest to a peripheral part of said first and/or second substrate, at a distance from said seal equal to a distance between two adjacent seals in another area.

43. The large substrate for producing a plurality of panels according to claim **37**, wherein said first or said second substrate has an extension for a connection electrode, the extension extending outward from one frame formed by the seal, and the two seal members disposed on both sides of the extension are said first structure.

44. A liquid crystal panel having two substrates bonded face to face with a frame-shaped seal interposed therebetween, the seal containing gap adjustment members, at least one of the substrates having at least at one end thereof an extension protruding beyond the associated end of the other substrate, a liquid crystal being encapsulated inside the seal;

wherein a side of the seal neighboring the extension is formed into first structure from a sealing material containing gap adjustment members, and another side of the seal is formed into second structure from a sealing material containing gap adjustment members; and

wherein said first structure is more resistant to pressure applied to said two substrates than said second structure, whereby said first and second structures make said gap resistant to compression.

45. The liquid crystal panel according to claim **44**, wherein said sealing material in said first structure contains a relatively high proportion or density of said gap adjustment members, and said sealing material in said second structure contains a relatively low proportion or density of said gap adjustment members.

46. The liquid crystal panel according to claim **45**, wherein said gap adjustment members are spherical, cylindrical or prismatic.

47. The liquid crystal panel according to claim **44**, wherein said sealing material in said first structure contains spherical or cylindrical spacers having a relatively large diameter as the gap adjustment members, and said sealing material in said second structure contains spherical or cylindrical spacers having a relatively small diameter as the gap adjustment members.

48. The liquid crystal panel according to claim **44**, wherein said sealing material in said first structure contains cylindrical or prismatic spacers as the gap adjustment members having a relatively large cross-sectional area parallel to the surface of liquid crystal panel, and said sealing material in said second structure contains cylindrical or prismatic spacers as the gap adjustment members having a relatively small cross-sectional area parallel to the surface of liquid crystal panel.

49. The liquid crystal panel according to claim **44**, further comprising a first end where one of the two substrates protrudes beyond the other substrate, and a second end where the ends of the two substrates are vertically aligned with each other;

wherein said seal is disposed along the outer edge of one of said two substrates;

wherein said spacers are disposed in or near said seal; and

wherein a side of the seal neighboring the first extension is formed into said first structure from a sealing material containing gap adjustment members, and sides of the seal along the second end are formed into second structure from a sealing material containing gap adjustment members.

* * * * *