US 20110007251A1

(19) United States

(12) Patent Application Publication

Yamamoto et al.

(10) Pub. No.: US 2011/0007251 A1

(43) Pub. Date: Jan. 13, 2011

(54) LIQUID CRYSTAL DISPLAY DEVICE

(75) Inventors: **Takashi Yamamoto**, Chiba (JP); **Tomoya Sugano**, Mobara (JP); **Takamitsu Kamada**, Mobara (JP)

Correspondence Address:
ANTONELLI, TERRY, STOUT & KRAUS, LLP
1300 NORTH SEVENTEENTH STREET, SUITE 1800
ARLINGTON, VA 22209-3873 (US)

(73) Assignee: **Hitachi Displays, Ltd.**

(21) Appl. No.: **12/832,193**

(22) Filed: **Jul. 8, 2010**

(30) **Foreign Application Priority Data**

Jul. 8, 2009 (JP) 2009-161610

Publication Classification

(51) **Int. Cl.**
G02F 1/1335 (2006.01)
G02F 1/1339 (2006.01)

(52) **U.S. Cl.** **349/108**

(57) **ABSTRACT**

In a liquid crystal display device in which liquid crystal is sealed by a one drop fill method, the gap between a TFT substrate and a counter substrate is defined by a columnar spacer in a display region, and the gap between them is defined by a columnar spacer also in a seal portion. In the display region, one layer of a color filter is formed below the columnar spacer. In the seal portion, two layers of island-shaped color filters are formed. With this configuration, the gap between the TFT substrate and the counter substrate can be maintained equal between the display region and the seal portion. Even when the process for forming the columnar spacer varies, it is possible to eliminate a change in difference between the gap between the TFT substrate and the counter substrate in the display region and the gap in the seal portion.

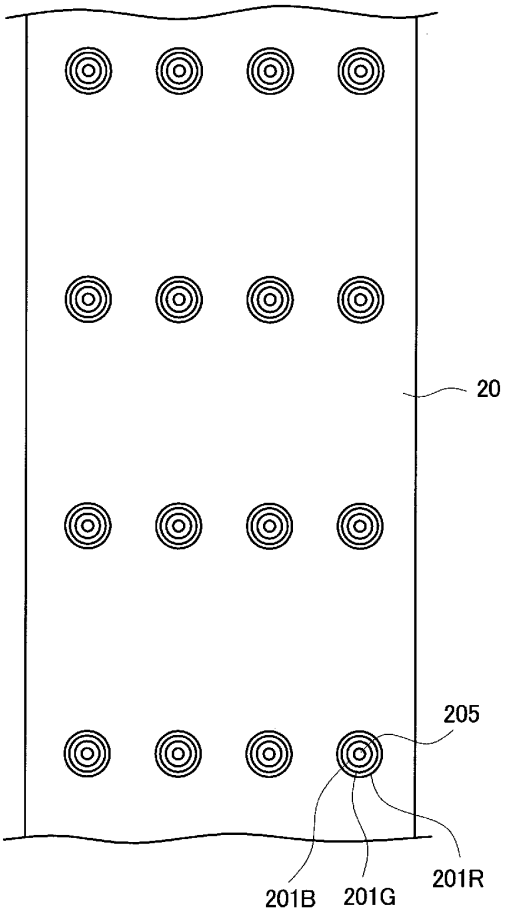

FIG. 1

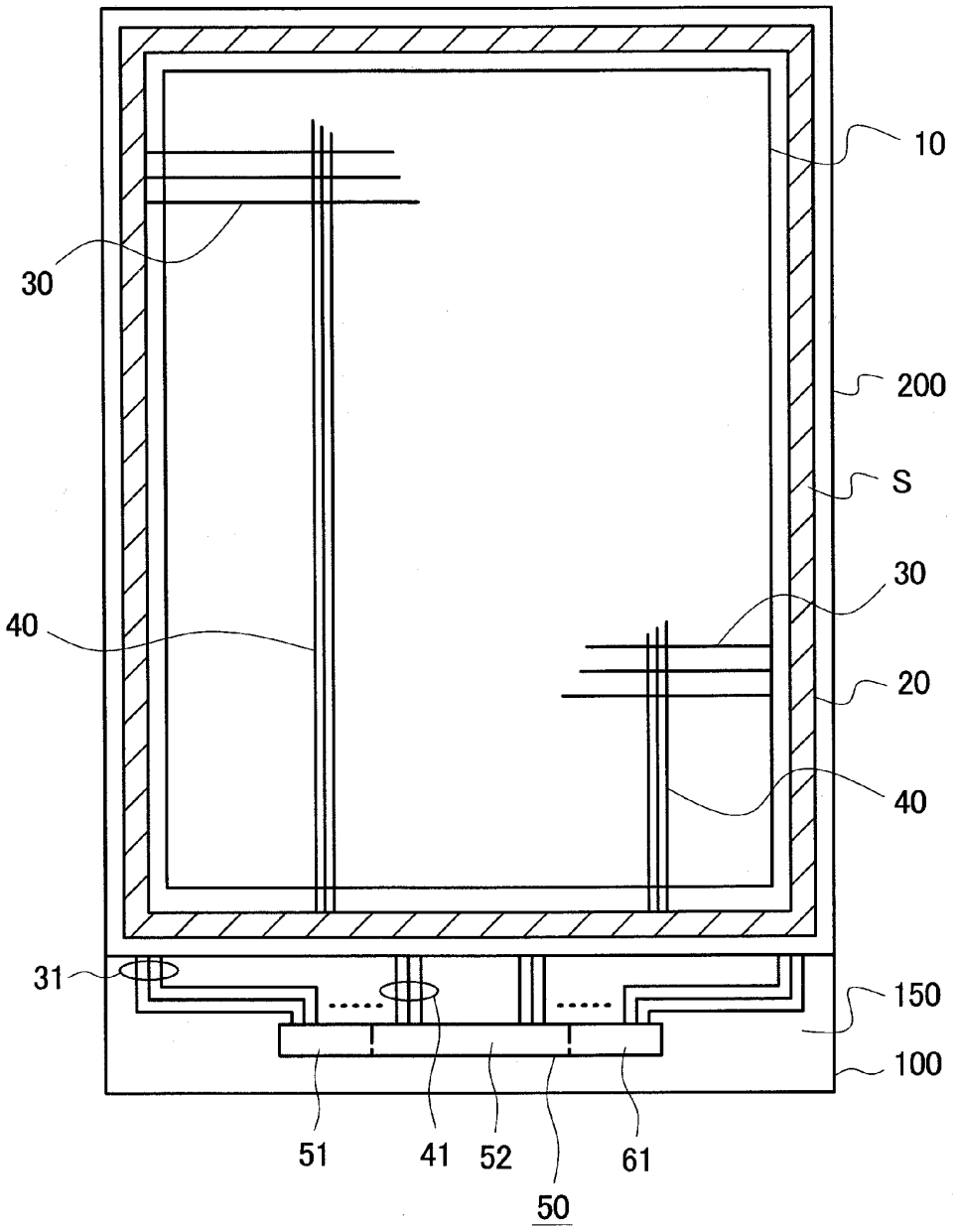

FIG. 2

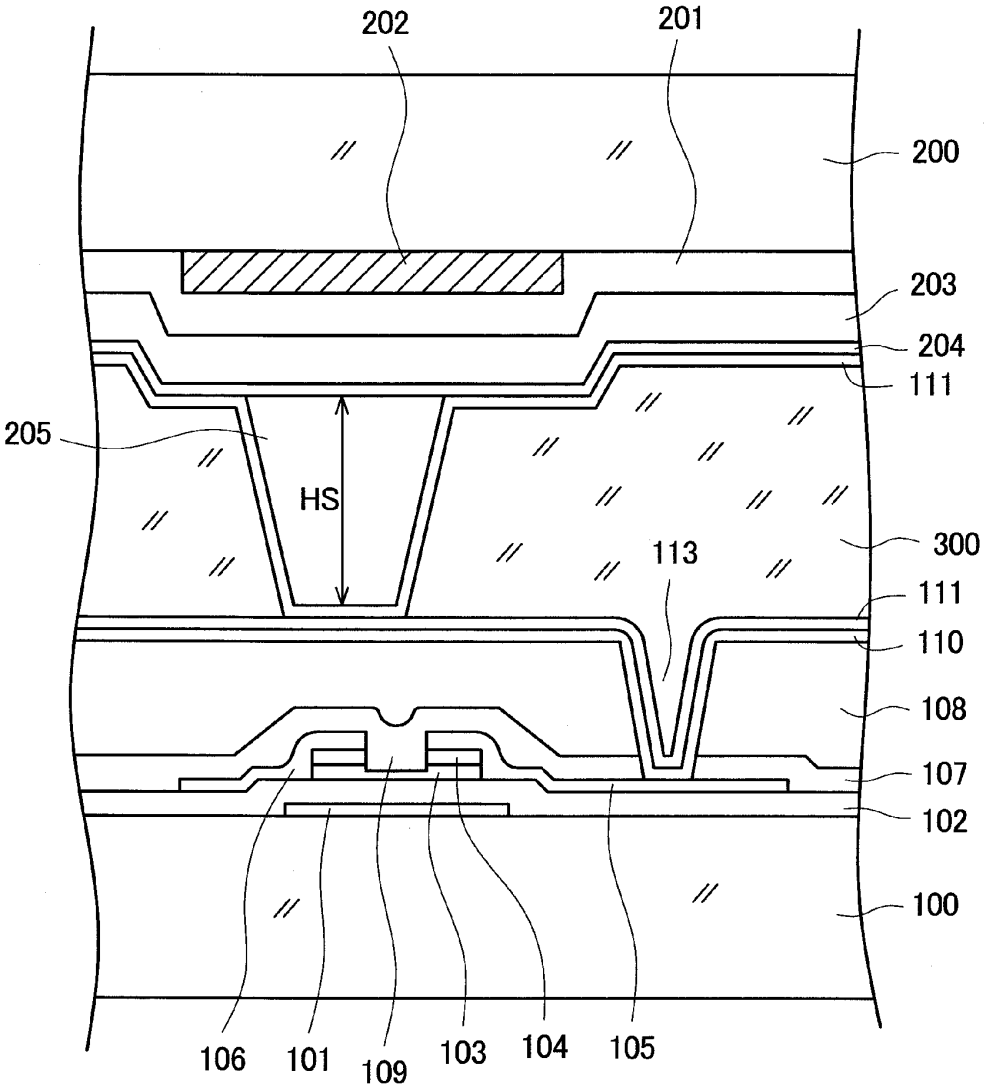
202
201
200
203
204
111
205
HS
300
113
111
110
108
107
102
100
106
101
109
103
104
105

FIG. 3

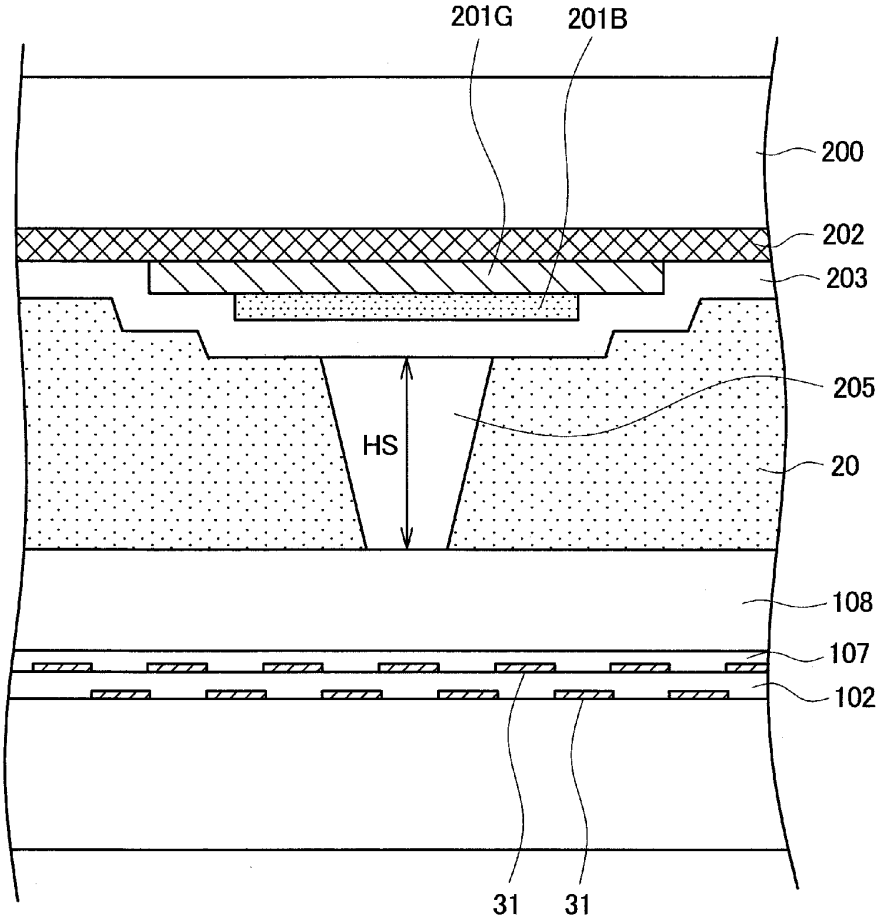

FIG. 4

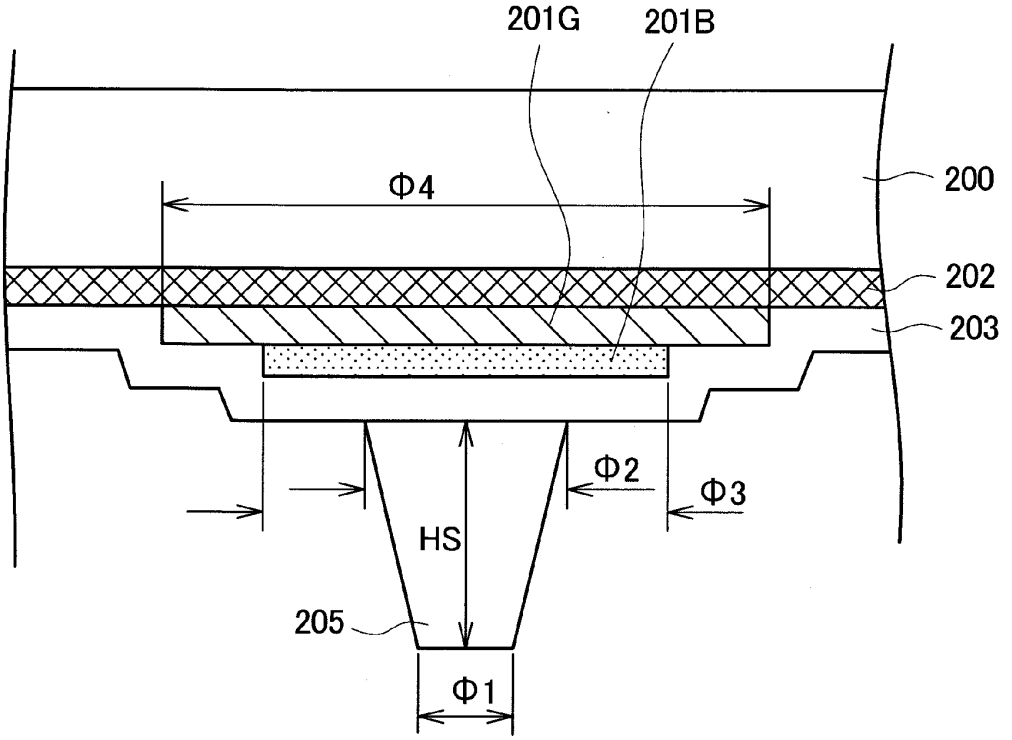

FIG. 5

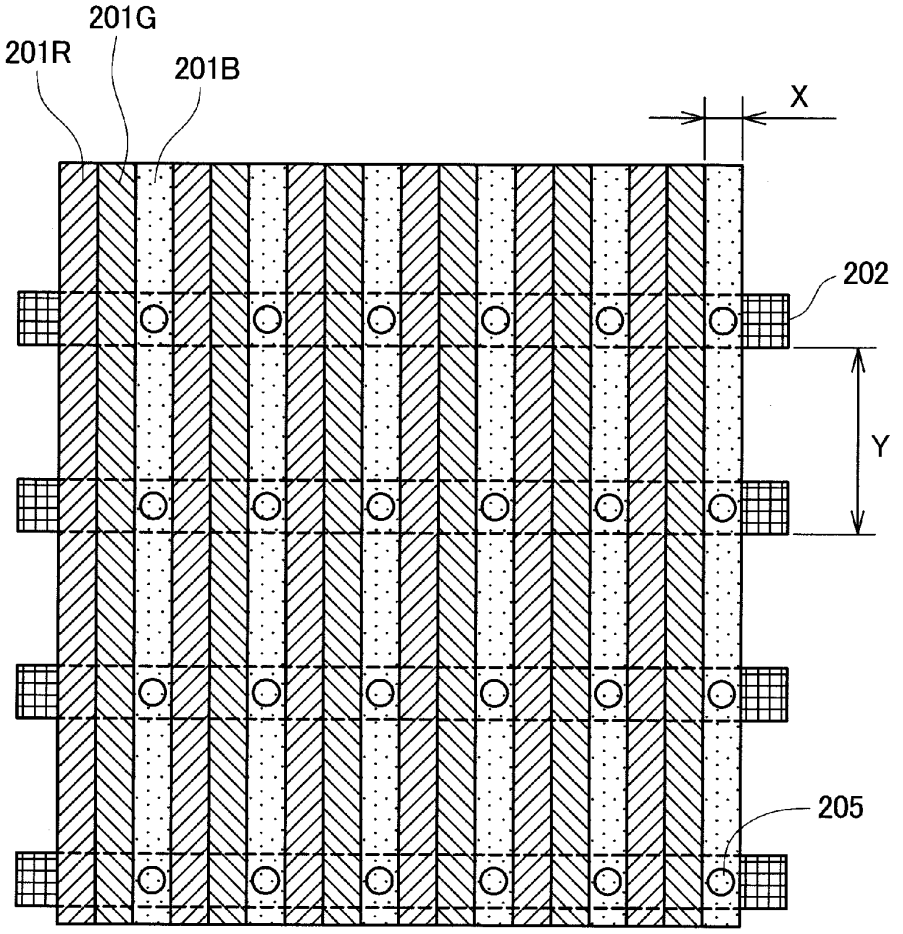

FIG. 6

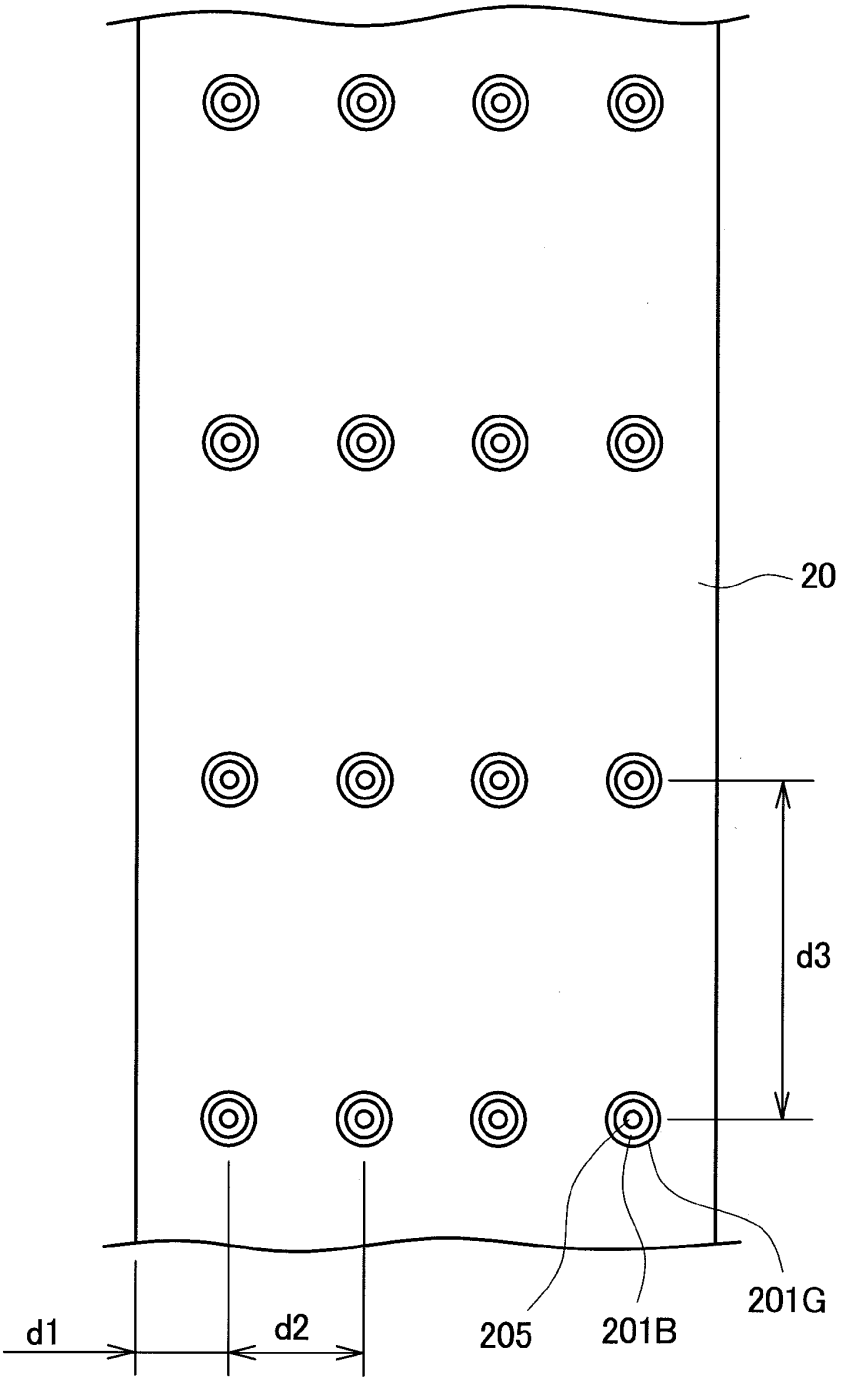

FIG. 7

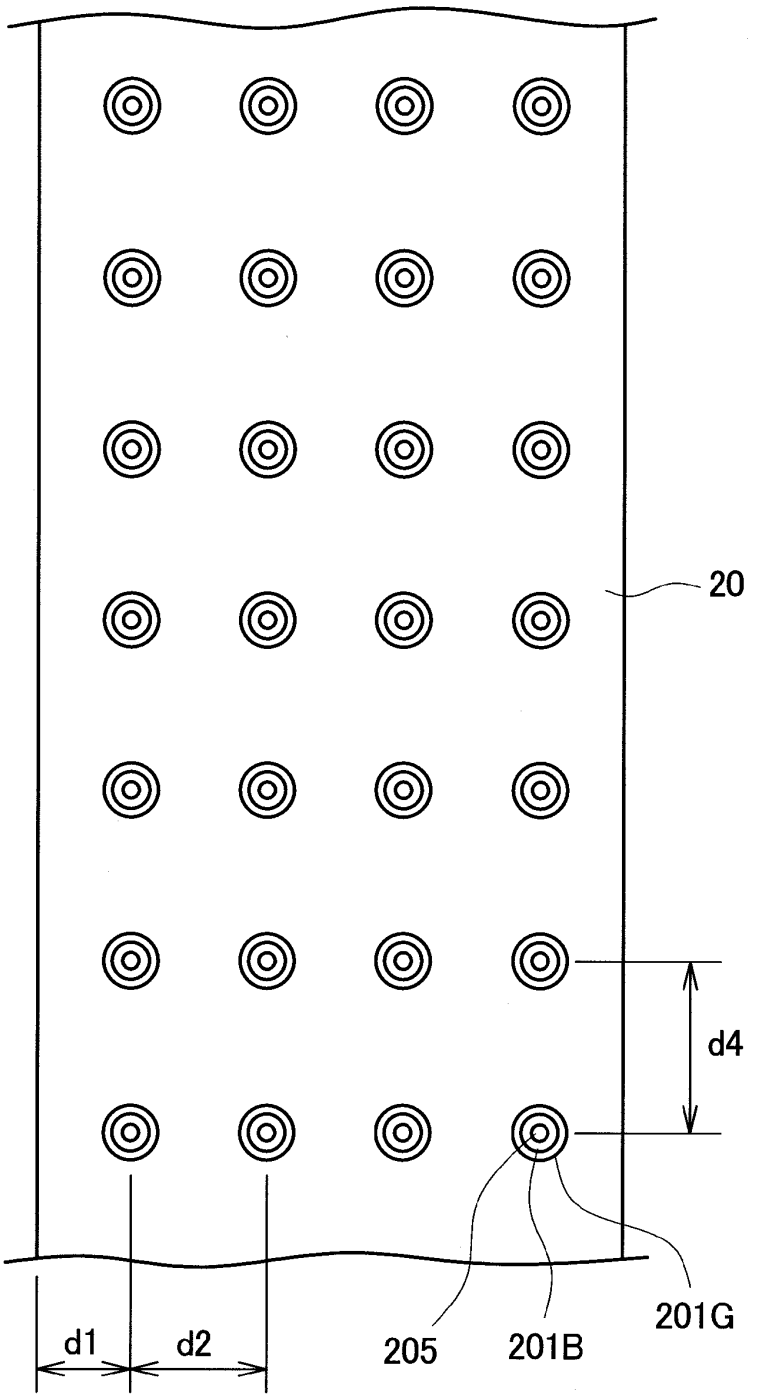

FIG. 8

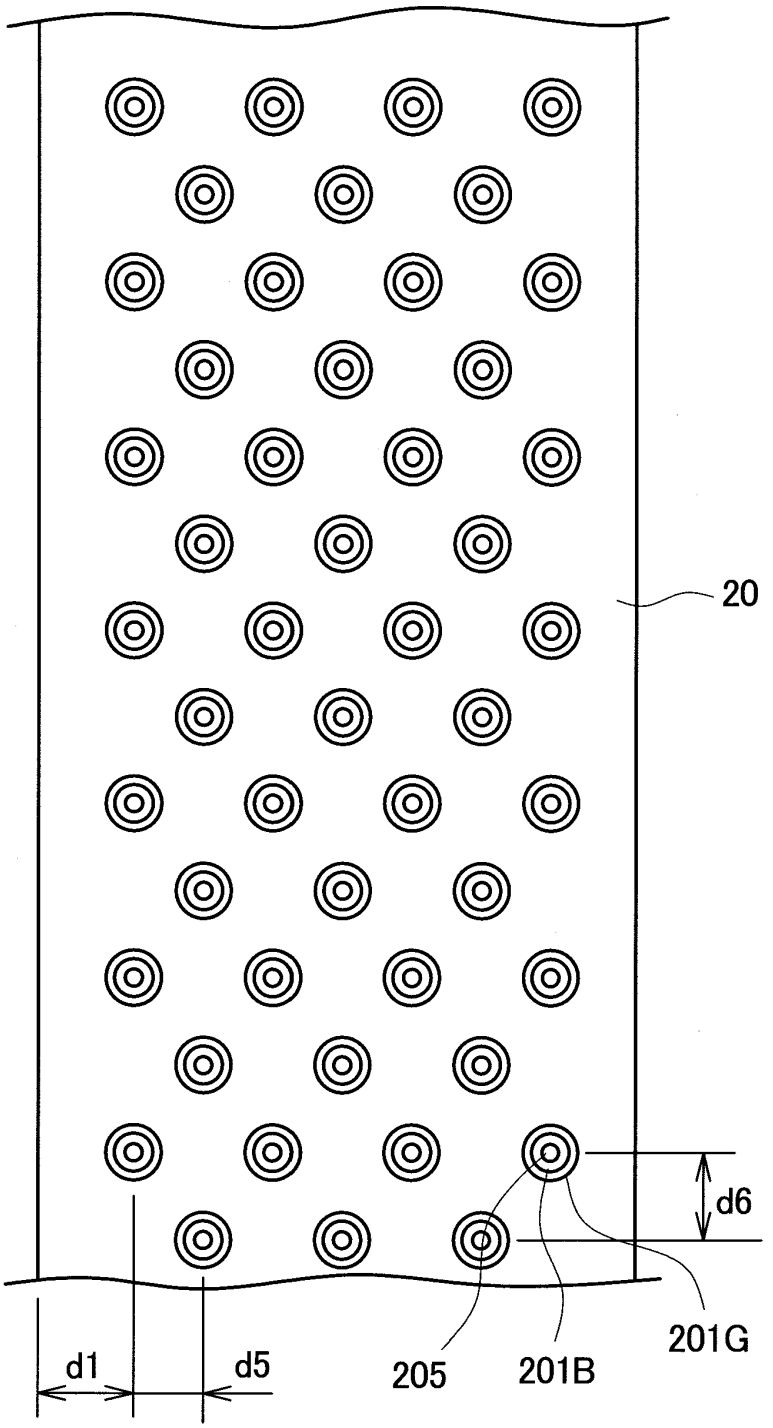

FIG. 9

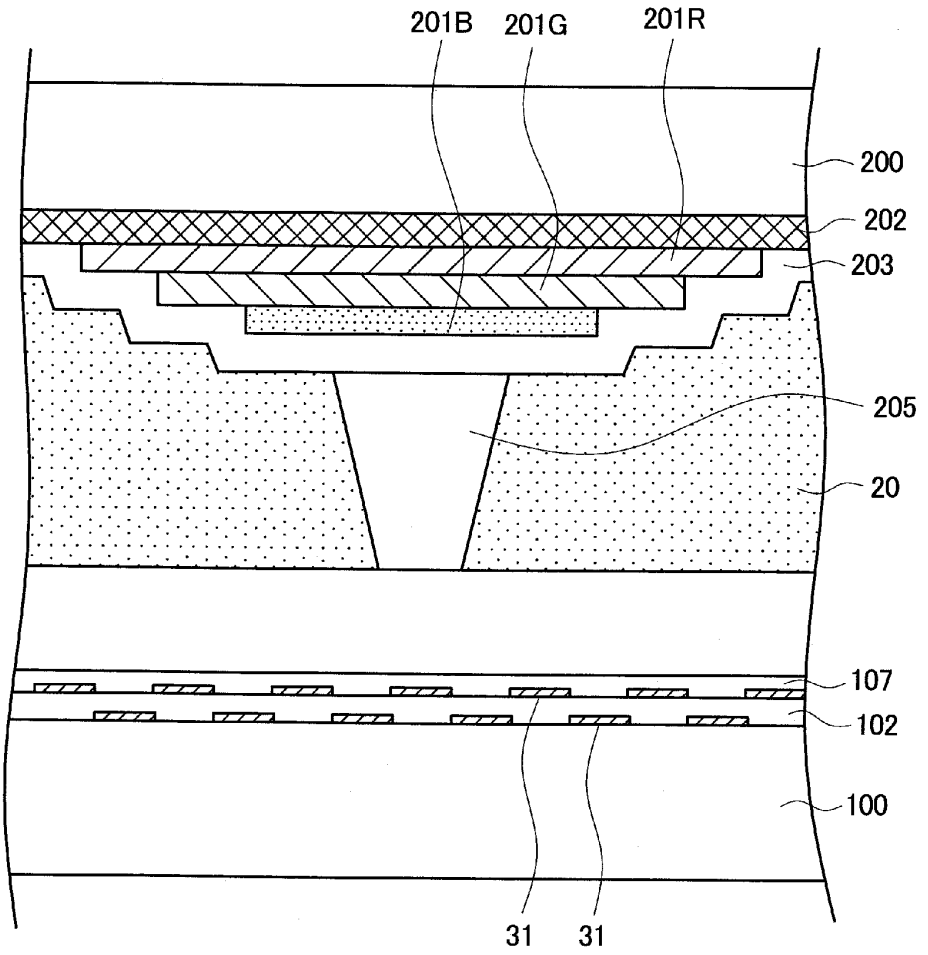

FIG. 10

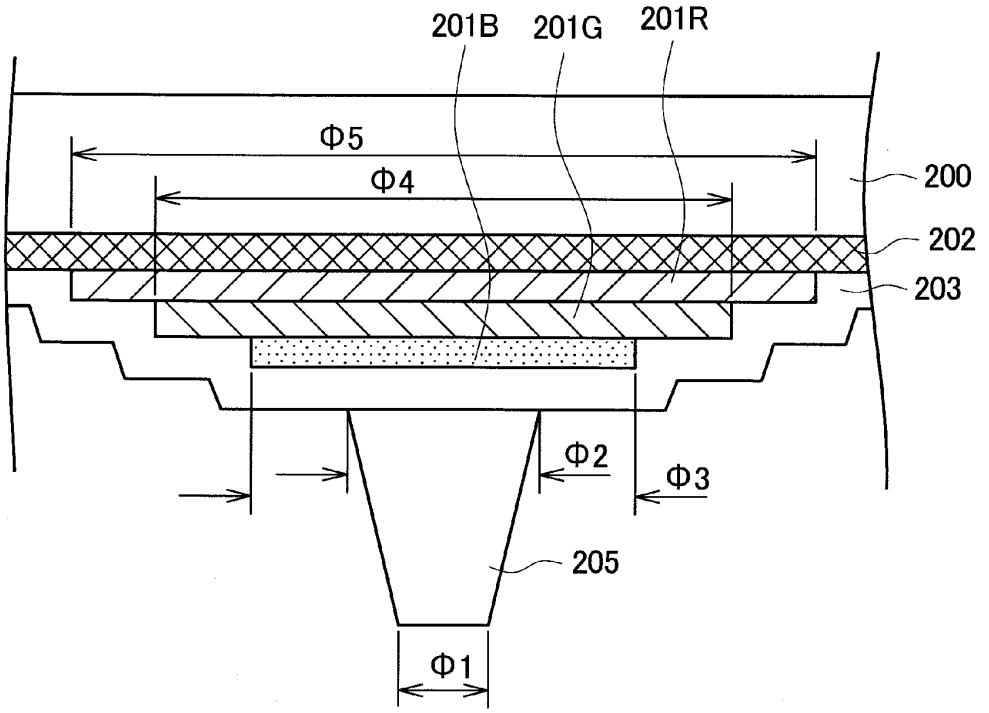

FIG. 11

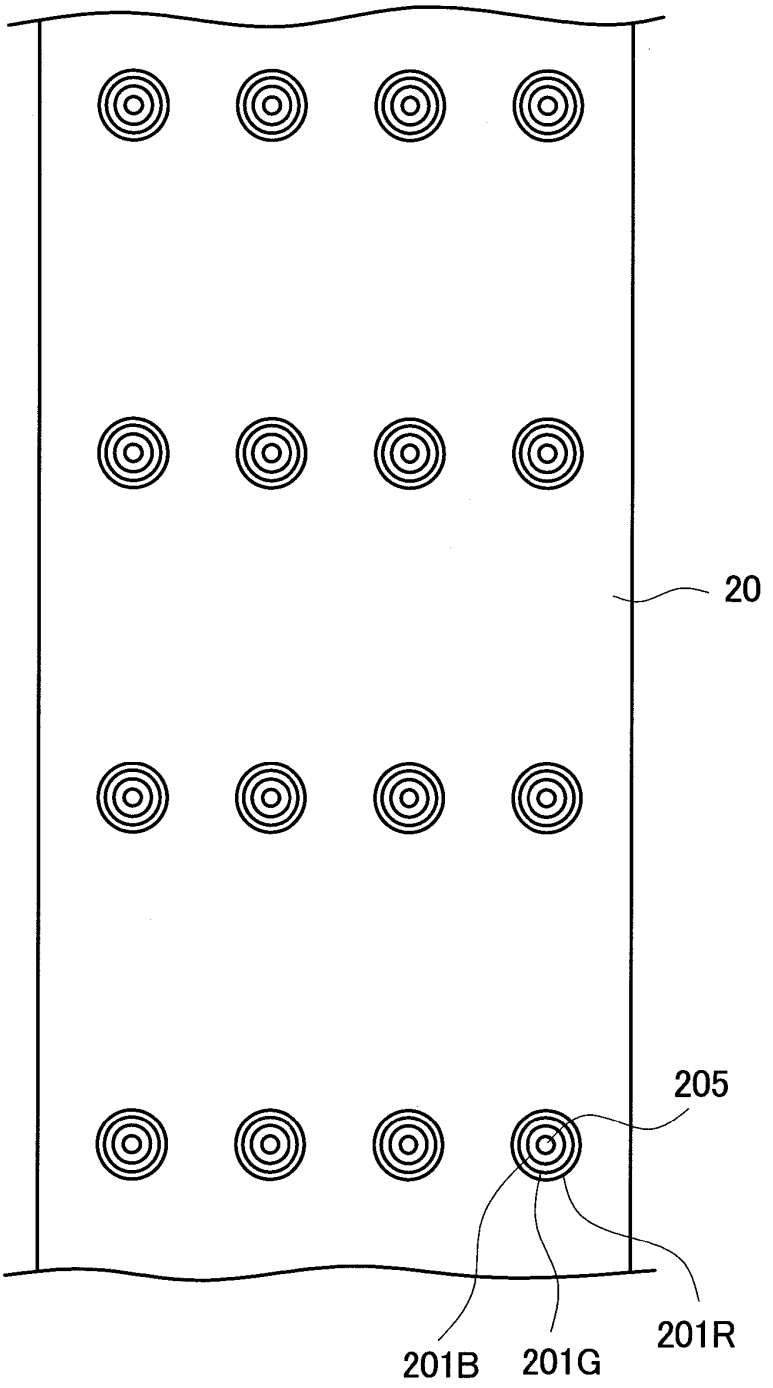

FIG. 12

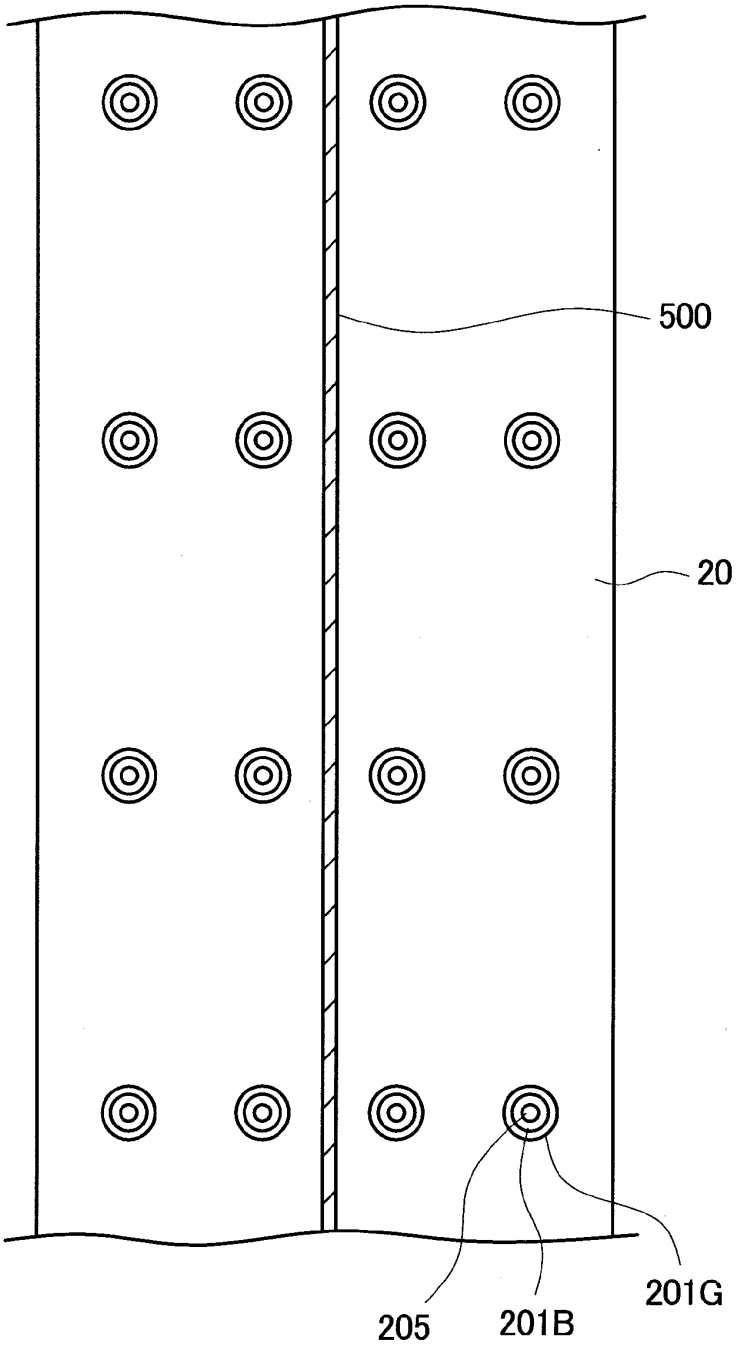

FIG. 13

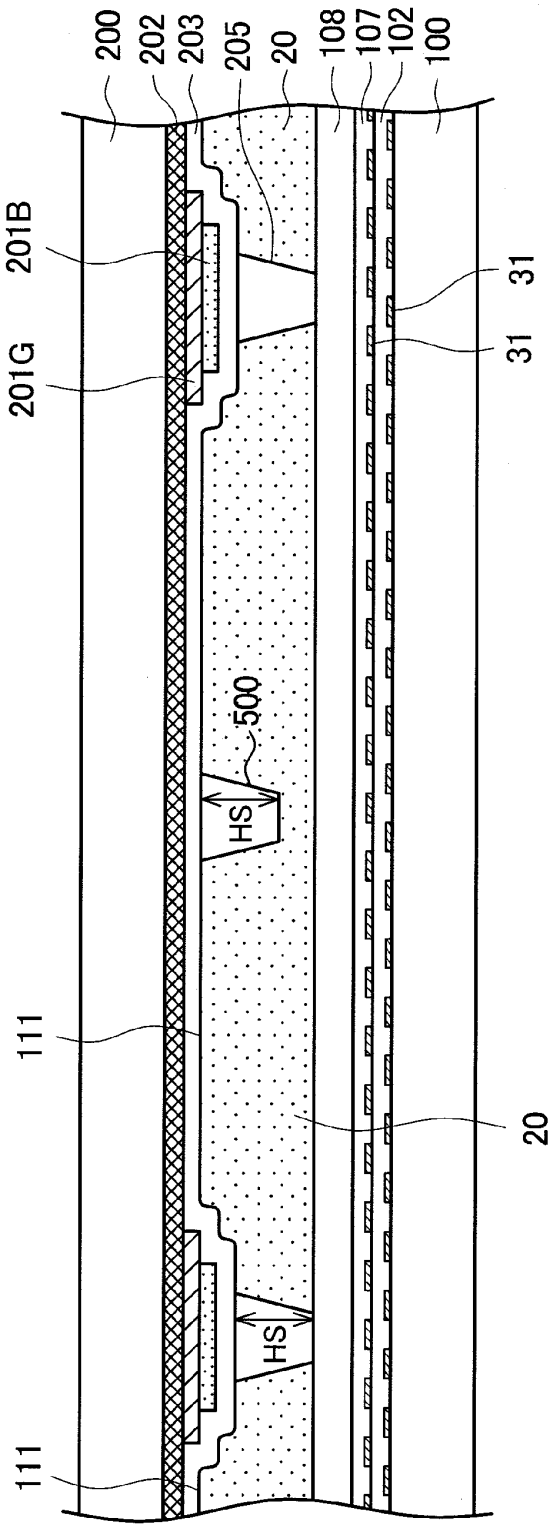
200
202
203
205
20
108
107
102
100
201B
201G
31
31
500
HS
HS
111
111
20

FIG. 14

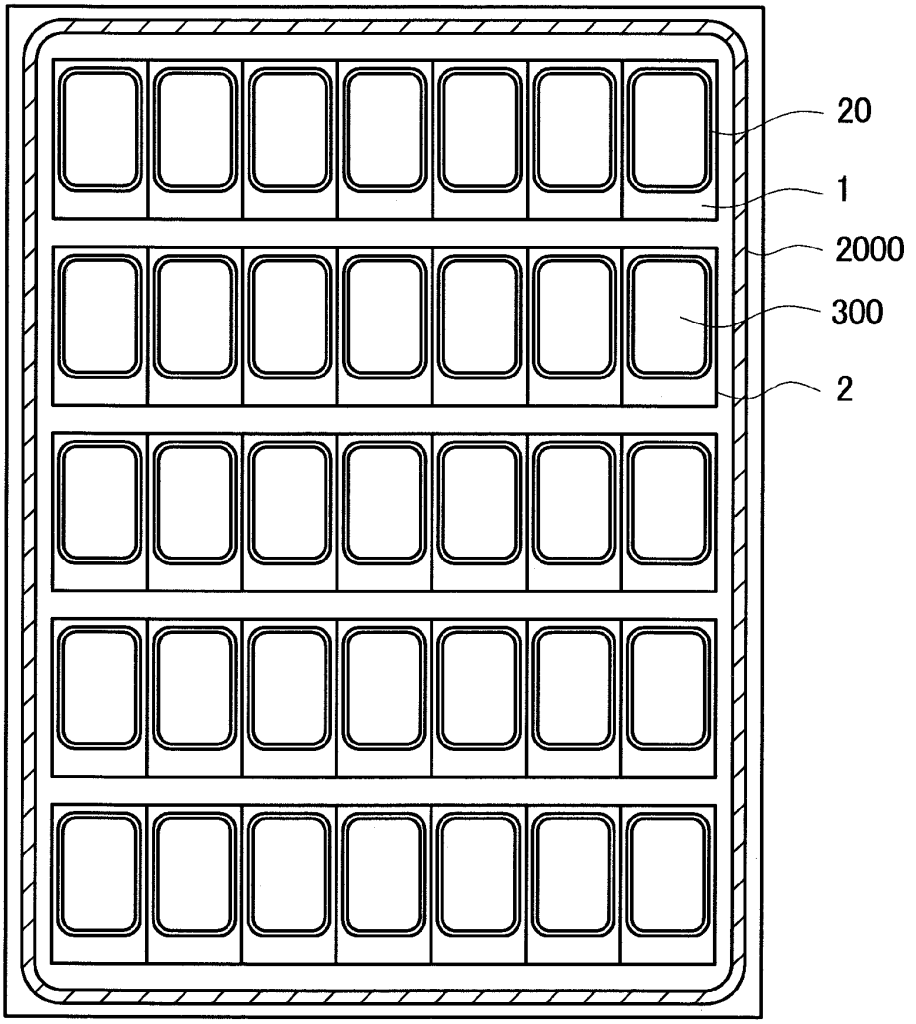

FIG. 15

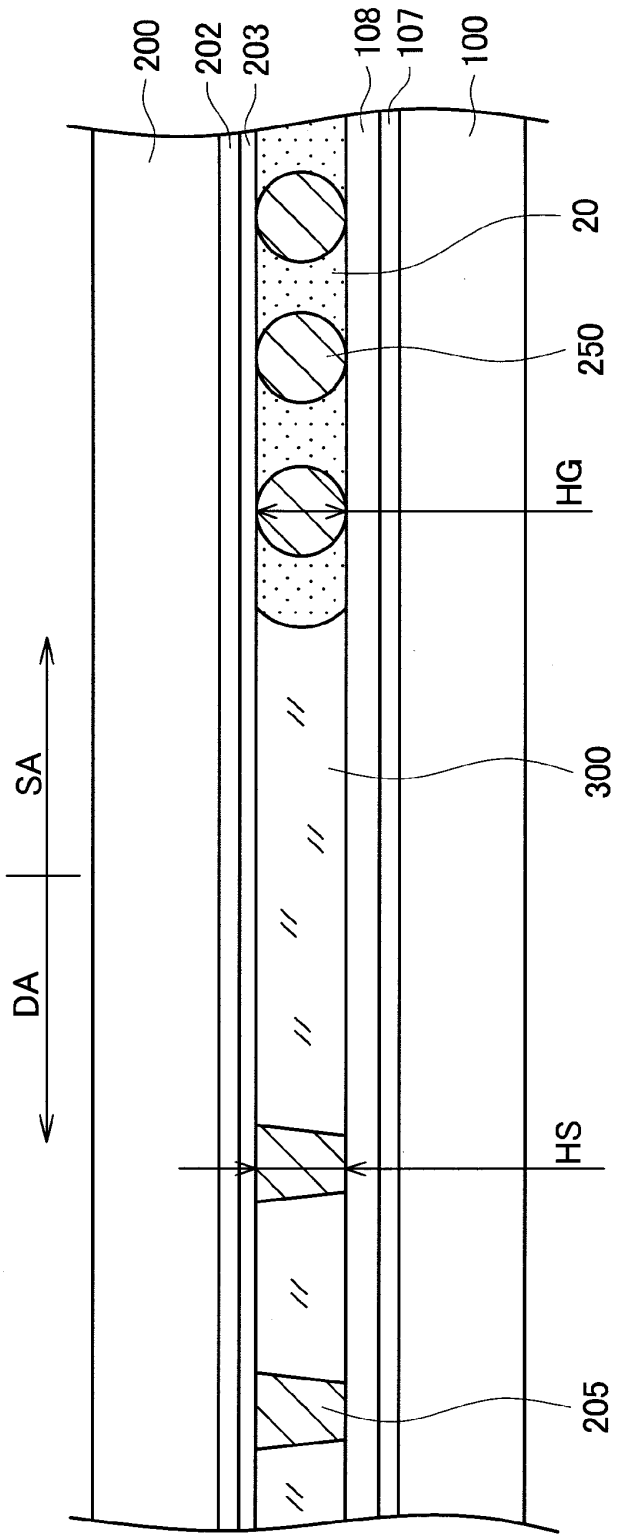

FIG. 16

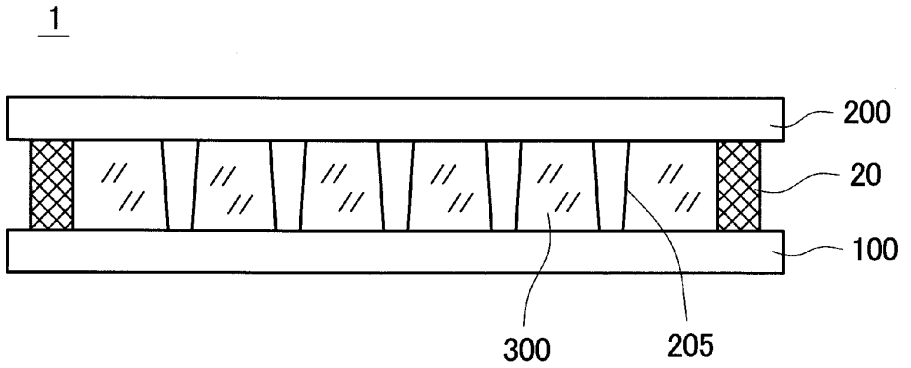

FIG. 17

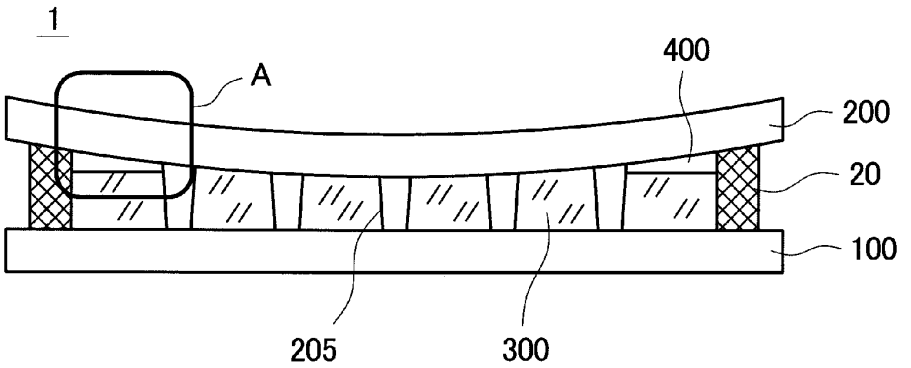

FIG. 18

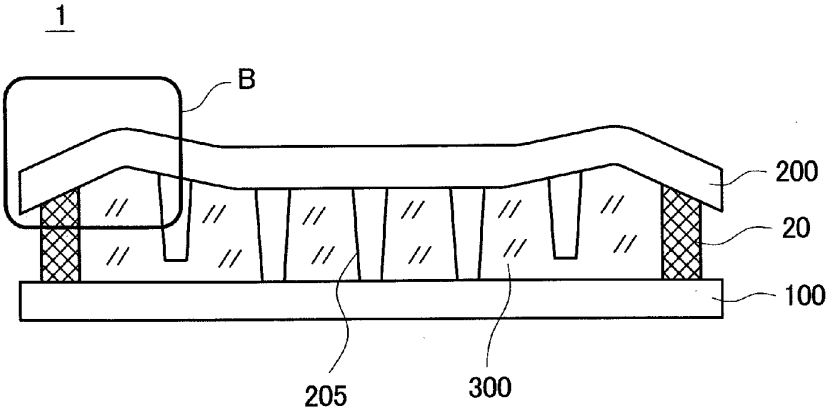

FIG. 19

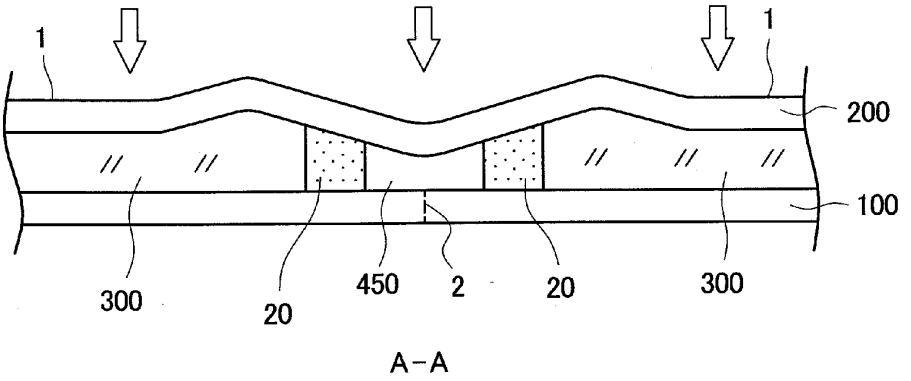

LIQUID CRYSTAL DISPLAY DEVICE

CLAIM OF PRIORITY

[0001] The present application claims priority from Japanese application serial No. 2009-161610 filed on Jul. 8, 2009, the content of which is hereby incorporated by reference into this application.

BACKGROUND OF THE INVENTION

[0002] 1. Field of the Invention

[0003] The present invention relates to a liquid crystal display device and more particularly to a liquid crystal display device which does not cause air bubbles or liquid crystal leakage and thus is improved in reliability in a configuration of filling liquid crystal between a TFT substrate and a counter substrate by a one drop fill method.

[0004] 2. Description of the Related Art

[0005] In liquid crystal display devices, liquid crystal is filled between a TFT substrate on which pixels each having a pixel electrode and a thin film transistor (TFT) are formed in a matrix and a counter substrate on which color filters and the like are formed, and an image is formed by controlling the molecules of the liquid crystal by an electric field. The gap between the TFT substrate and the counter substrate is as extremely small as several microns. In the conventional filling method of liquid crystal, the space between the TFT substrate and the counter substrate is sealed to create a vacuum within the space, and liquid crystal is injected by means of atmospheric pressure.

[0006] However, when the gap between the TFT substrate and the counter substrate is small, and the display area of the liquid crystal display device is large, the injection requires a great deal of time, which lengthens manufacturing throughput and thus increases the manufacturing cost. For addressing the problem, for example, a technique of sealing liquid crystal has been developed in which a required amount of liquid crystal is dropped onto the counter substrate, and thereafter the counter substrate and the TFT substrate are overlapped and sealed.

[0007] Such a one drop fill method has been conventionally employed for relatively large liquid crystal display devices and has started to be used for small liquid crystal display devices. In small liquid crystal display devices, a number of liquid crystal cells are formed on a mother substrate, and liquid crystal has to be sealed in each of the liquid crystal cells. However, a number of man-hours are required for sealing liquid crystal into the individual liquid crystal cells. According to the one drop fill method, liquid crystal can be injected into a number of liquid crystal cells at one time in the mother substrate.

[0008] In the specification, while the "liquid crystal cell" refers to one in a state where the TFT substrate and the counter substrate are sealed with a sealing material, and liquid crystal is sealed therebetween, the "liquid crystal display device" refers to one on which a drive IC for driving liquid crystal is mounted on the liquid crystal cell. However, they are sometimes used with no distinction.

[0009] In liquid crystal display devices, it is important to control the gap between the TFT substrate and the counter substrate. Conventionally, the gap is controlled by columnar spacers formed on the counter substrate in a display region and controlled by glass fibers in a seal portion.

[0010] On the other hand, JP-A-2001-174827 discloses a configuration of a liquid crystal display device in which columnar spacers are used in a display region, and columnar spacers are used also in a seal portion. JP-A-2001-174827 describes a configuration in which columnar spacers are formed on BM both in the display region and in the seal portion, so that the gap between the substrates in the display region is the same as that of the seal portion.

[0011] On the other hand, the adhesion between the sealing material, and the TFT substrate and the counter substrate in the seal portion is important for reliability. JP-A-2007-212667 describes a configuration in which, for preventing the intrusion of liquid crystal between the sealing material and the lower surface of the TFT substrate or the counter substrate in the seal portion, a weir serving as a stopper against liquid crystal is formed.

[0012] FIG. **14** is a plan view showing a state of a mother substrate **1000** for manufacturing small liquid crystal display devices. In FIG. **14**, the mother substrate **1000** is formed by overlapping a mother TFT substrate and a mother counter substrate. In the mother substrate **1000**, 7×5=35 pieces of liquid crystal cells **1** are fabricated. In FIG. **14**, scribe lines **2** for separating the mother substrate into the individual liquid crystal cells **1** are marked, and a sealing material **20** is formed for each of the liquid crystal cells **1**. Liquid crystal is dropped in a region inside the sealing material **20** and sealed with the sealing material **20**.

[0013] In small liquid crystal display devices, a glass substrate is required to be thin. A glass substrate serving as a mother TFT substrate or a mother counter substrate is standardized and is as thick as about 0.5 mm. Therefore, after forming the mother substrate **1000**, the mother substrate **1000** is reduced in thickness by polishing the outer surface thereof. In this case, for preventing a polishing solution from entering the inside of the mother substrate **1000**, a mother substrate sealing material **2000** is formed at the peripheries of the mother TFT substrate and the mother counter substrate. Thereafter, the individual liquid crystal cells **1** are separated from the mother substrate **1000** along the scribe lines **2**.

[0014] In the liquid crystal one drop fill method, the amount of liquid crystal to be dropped is very important. When liquid crystal is dropped onto the mother counter substrate, an accurately controlled amount of liquid crystal is dropped in a region surrounded by the sealing material **20** formed in the individual liquid crystal cell **1**. Thereafter, the liquid crystal is covered with the mother TFT substrate, and the mother TFT substrate and the mother counter substrate are bonded together with the sealing materials **20** and the mother substrate sealing material **2000**. In this case, when the amount of liquid crystal to be dropped is too small, air bubbles are generated in the liquid crystal cell **1**, and when the amount of liquid crystal to be dropped is too large, liquid crystal enters between the sealing material **20** and the TFT substrate or between the sealing material **20** and the counter substrate, causing sealing defects.

[0015] The capacity of the inside of the liquid crystal cell **1** is determined by the height of a columnar spacer **205** formed in the display region. As the height of the columnar spacer **205** is greater, the capacity of the inside becomes large, and as the height of the columnar spacer **205** is smaller, the capacity of the inside becomes small. Accordingly, a proper dropping amount of liquid crystal varies depending on the height of the columnar spacer **205**. However, the height of the columnar spacer **205** changes depending on the process.

[0016] For addressing the problem, the height of the columnar spacer **205** formed on the counter substrate **200** is conventionally measured in each of the counter substrates **200**, the counter substrates **200** are divided into groups according to the height of the columnar spacer **205**, and the dropping amount of liquid crystal to be dropped onto the counter substrate **200** is determined in each of the groups.

[0017] Although the gap between the TFT substrate **100** and the counter substrate **200** is determined by the columnar spacers **205** in the display region, the gap between the TFT substrate **100** and the counter substrate **200** is conventionally determined by glass fibers **250** in the seal portion. FIG. **15** is a schematic cross-sectional view showing this state. In FIG. **15**, a black matrix **202** and an overcoat film **203** are formed on the counter substrate **200** side, and an inorganic passivation film **107** and an organic passivation film **108** are formed on the TFT substrate **100** side. FIG. **15** is a schematic view, and therefore the other layers are not illustrated.

[0018] In the display region indicated by DA in FIG. **15**, the gap between the counter substrate **200** and the TFT substrate **100** is determined by the columnar spacers **205** and determined in the seal portion by the diameter of the glass fiber **250** mixed in the sealing material. In FIG. **15**, liquid crystal **300** is sealed inside the sealing material.

[0019] Although a height HS of the columnar spacer **205** varies depending on the process, a diameter GH of the glass fiber **250** is controlled with relatively high accuracy. When the counter substrates **200** are divided into groups according to the height of the columnar spacer **205**, they are divided into three groups: a group where the height HS of the columnar spacer **205** is substantially the same as the diameter GH of the glass fiber **250**; a group where the height HS of the columnar spacer **205** is smaller than the diameter GH of the glass fiber **250**; and a group where the height HS of the columnar spacer **205** is greater than the diameter HG of the glass fiber **250**.

[0020] FIG. **16** is a cross-sectional view showing a state of the liquid crystal cell **1** of the group where the height HS of the columnar spacer **205** is substantially the same as the diameter GH of the glass fiber **250**. In the example of FIG. **16**, the amount of the liquid crystal **300** is properly controlled, and therefore the reliability of the seal portion can be maintained at a high level. FIG. **17** is a cross-sectional view of the liquid crystal cell **1** in the group where the height HS of the columnar spacer **205** is smaller than the diameter GH of the glass fiber **250**. Since the dropping amount of liquid crystal is determined by the height of the columnar spacer **205**, an air bubble **400** is generated in this group like a region A at the periphery shown in FIG. **17**.

[0021] FIG. **18** is a cross-sectional view of the liquid crystal cell **1** in the group where the height HS of the columnar spacer **205** is greater than the diameter HG of the glass fiber **250**. Since the dropping amount of the liquid crystal **300** is determined by the height of the columnar spacer **205**, tilting occurs in the seal portion and the substrate warps outward in this group as indicated by a region B at the periphery shown in FIG. **18**. Although only the counter substrate **200** is warped in FIG. **18**, FIG. **18** is a schematic view, and actually the TFT substrate **100** side also warps.

[0022] FIG. **19** is a schematic view showing why tilting of the substrate occurs in the seal portion. Dropping of liquid crystal is conducted under reduced pressure. Liquid crystal is dropped onto each of the liquid crystal cells **1**, the TFT substrate **100** and the counter substrate **200** are overlapped each other, the sealing material is cured, and thereafter the TFT substrate **100** and the counter substrate **200** are returned to the air. Since a reduced pressure region **450** is formed between the liquid crystal cell **1** and the liquid crystal cell **1**, that is, between the sealing material and the sealing material, the substrate is deformed inward by atmospheric pressure indicated by open arrows. On the other hand, since the liquid crystal **300** is excessively dropped and sealed in a region inside the sealing material, that is, on the liquid crystal cell **1** side, the substrate is deformed outward. Accordingly, tilting of the substrate occurs in the seal portion.

[0023] When the mother substrate **1000** in this state is separated along the scribe line **2**, the liquid crystal cell **1** has a cross-sectional shape shown in FIG. **18**. When the TFT substrate **100** or the counter substrate **200** is reduced in thickness by polishing, the deformation of the substrate shown in FIG. **18** is likely to occur. As described above, when the liquid crystal **300** is excessively sealed, the reliability of the seal portion is impaired, and the contrast is reduced by a change in gap between the TFT substrate **100** and the counter substrate **200** at the periphery of the display region.

SUMMARY OF THE INVENTION

[0024] In the conventional method as described above, even when the height of the columnar spacer **205** is measured to divide the counter substrates **200** into groups according to the height of the columnar spacer **205**, and the amount of liquid crystal to be dropped is controlled in each of the groups, the air bubbles **400** due to too little liquid crystal and the deformation of the substrate due to excessive liquid crystal are caused at a certain rate. It is an object of the invention to solve the above-described problem and realize a liquid crystal display device with high reliability.

[0025] To achieve the object, the invention is specifically configured as follows.

[0026] (1) A liquid crystal display device includes: a TFT substrate having a display region where pixels each having a TFT and a pixel electrode are formed in a matrix; a counter substrate having a display region where color filters of three colors are formed in a matrix, the TFT substrate and the counter substrate being bonded together with a sealing material in a seal portion at a periphery; and liquid crystal sealed between the TFT substrate and the counter substrate, wherein in the display region, a gap between the counter substrate and the TFT substrate is defined by a first columnar spacer formed on the counter substrate, and one color filter among the color filters of three colors is present below the first columnar spacer; and in the seal portion, a gap between the counter substrate and the TFT substrate is defined by a second columnar spacer formed on the counter substrate, a first color filter among the color filters of three colors is formed in an island shape below the second columnar spacer, and a second color filter is stacked and formed in an island shape on the first color filter.

[0027] (2) The liquid crystal display device according to (1), wherein an overcoat film is present between the first columnar spacer and the color filter in the display region, and an overcoat film is present between the second columnar spacer and the second color filter in the seal portion.

[0028] (3) The liquid crystal display device according to claim **1**, wherein the first color filter is a green color filter, and the second color filter is a blue color filter.

[0029] (4) A liquid crystal display device includes: a TFT substrate having a display region where pixels each having a TFT and a pixel electrode are formed in a matrix; a counter

substrate having a display region where color filters of three colors are formed in a matrix, the TFT substrate and the counter substrate being bonded together with a sealing material in a seal portion at a periphery; and liquid crystal sealed between the TFT substrate and the counter substrate, wherein in the display region, a gap between the counter substrate and the TFT substrate is defined by a first columnar spacer formed on the counter substrate, and one color filter among the color filters of three colors is present below the first columnar spacer; and in the seal portion, a gap between the counter substrate and the TFT substrate is defined by a second columnar spacer formed on the counter substrate, a first color filter among the color filters of three colors is formed in an island shape below the second columnar spacer, a second color filter is stacked and formed in an island shape on the first color filter, and a third color filter is stacked and formed in an island shape on the second color filter.

[0030] (5) The liquid crystal display device according to (4), wherein an overcoat film is present between the first columnar spacer and the color filter in the display region, and an overcoat film is present between the second columnar spacer and the third color filter in the seal portion.

[0031] (6) The liquid crystal display device according to (4), wherein the first color filter is a red color filter, the second color filter is a green color filter, and the third color filter is a blue color filter.

[0032] (7) A liquid crystal display device includes: a TFT substrate having a display region where pixels each having a TFT and a pixel electrode are formed in a matrix; a counter substrate having a display region where color filters of three colors are formed in a matrix, the TFT substrate and the counter substrate being bonded together with a sealing material in a seal portion at a periphery; and liquid crystal sealed between the TFT substrate and the counter substrate, wherein in the display region, a gap between the counter substrate and the TFT substrate is defined by a first columnar spacer formed on the counter substrate, and one color filter among the color filters of three colors is present below the first columnar spacer; in the seal portion, a gap between the counter substrate and the TFT substrate is defined by a second columnar spacer formed on the counter substrate, a first color filter among the color filters of three colors is formed in an island shape below the second columnar spacer, and a second color filter is stacked and formed in an island shape on the first color filter; and in the seal portion, a weir formed on the counter substrate is formed so as to surround the display region, and the color filters are not present below the weir.

[0033] According to an aspect of the invention, the difference between the gap between the TFT substrate and the counter substrate in the display region and the gap between the TFT substrate and the counter substrate in the seal portion can be eliminated or can be always maintained at a fixed value. Accordingly, in a liquid crystal display device of a type which injects liquid crystal by a one drop fill method, the reliability of the seal portion can be improved. Moreover, the generation of air bubbles in the display region can be prevented.

BRIEF DESCRIPTION OF THE DRAWINGS

[0034] FIG. **1** is a plan view of a liquid crystal display device.

[0035] FIG. **2** is a cross-sectional view of a display region of the liquid crystal display device.

[0036] FIG. **3** is a cross-sectional view of a seal portion of a liquid crystal display device according to a first embodiment.

[0037] FIG. **4** is a cross-sectional view showing a structure in the vicinity of a columnar spacer according to the first embodiment.

[0038] FIG. **5** is a plan view showing a display region of a counter substrate of the liquid crystal display device.

[0039] FIG. **6** is an exemplary plan view of a seal portion according to the first embodiment.

[0040] FIG. **7** is another exemplary plan view of a seal portion according to the first embodiment.

[0041] FIG. **8** is still another exemplary plan view of a seal portion according to the first embodiment.

[0042] FIG. **9** is a cross-sectional view of a seal portion of a liquid crystal display device according to a second embodiment.

[0043] FIG. **10** is a cross-sectional view showing a structure in the vicinity of a columnar spacer according to the second embodiment.

[0044] FIG. **11** is an exemplary plan view of a seal portion according to the second embodiment.

[0045] FIG. **12** is an exemplary plan view of a seal portion according to a third embodiment.

[0046] FIG. **13** is a cross-sectional view of the seal portion of a liquid crystal display device according to the third embodiment.

[0047] FIG. **14** is a plan view of a mother substrate.

[0048] FIG. **15** shows an exemplary configuration for defining the gap between substrates in a display region and in a seal portion in the related art.

[0049] FIG. **16** is a cross-sectional view of a liquid crystal display device when the amount of liquid crystal is proper.

[0050] FIG. **17** is a cross-sectional view of the liquid crystal display device when the amount of liquid crystal is too small.

[0051] FIG. **18** is a cross-sectional view of the liquid crystal display device when the amount of liquid crystal is excessive.

[0052] FIG. **19** is a cross-sectional view of a mother substrate when the amount of liquid crystal is excessive.

DETAILED DESCRIPTION OF THE INVENTION

[0053] Hereinafter, the contents of the invention will be described in detail based on embodiments.

First Embodiment

[0054] FIG. **1** is a plan view of a small liquid crystal display device used for mobile phones or the like as an example of a product to which the invention is applied. In FIG. **1**, a counter substrate **200** is disposed above a TFT substrate **100**. A liquid crystal layer is interposed between the TFT substrate and the counter substrate. The TFT substrate and the counter substrate are bonded together with a sealing material **20** formed in a frame portion. In FIG. **1**, since liquid crystal is sealed by a one drop fill method, a filling port is not formed.

[0055] The TFT substrate **100** is formed larger than the counter substrate **200**. In a portion of the TFT substrate **100** extended from the counter substrate **200**, a terminal portion **150** for supplying a power supply, video signals, scanning signals, and the like to a liquid crystal cell **1** is formed.

[0056] In the terminal portion **150**, an IC driver **50** for driving scanning lines, video signal lines, and the like is disposed. The IC driver **50** is divided into three regions. At the

center of the IC driver, a video signal drive circuit **52** is disposed. A scanning signal drive circuit **51** is disposed on both sides of the center.

[0057] In a display region **10** of FIG. **1**, scanning lines **30** extend in the horizontal direction and are arranged in the vertical direction. Moreover, video signal lines **40** extend in the vertical direction and are arranged in the horizontal direction. The scanning lines are connected to the scanning signal drive circuit **51** of the IC driver **50** through scanning-line lead lines **31**. In FIG. **1**, for arranging the display region **10** at the center of the liquid crystal display device, the scanning-line lead lines **31** are arranged on both sides of the display region **10**. Therefore, the scanning signal drive circuit **51** is disposed on both sides in the IC driver **50**. On the other hand, video-signal-line lead lines **41** which connect the video signal lines with the IC driver **50** are collected on the lower side of a screen. The video-signal-line lead lines **41** are connected to the video signal drive circuit **52** arranged at the central portion of the IC driver **50**.

[0058] FIG. **2** is a cross-sectional view of the display region of the liquid crystal display device shown in FIG. **1**. FIG. **2** shows a cross-sectional view of the display region of the liquid crystal display device of a typical TN type. However, the invention can be applied not only to TN type liquid crystal display devices but also to another type liquid crystal display devices such as of in-plane switching (IPS) type.

[0059] In FIG. **2**, a gate electrode **101** is formed on the TFT substrate **100**. The gate electrode **101** is formed by sputtering and thereafter patterned by photolithography. The gate electrode **101** is formed of Al and has a thickness of about 300 nm.

[0060] The scanning lines, which are not shown, and the like are formed simultaneously with and in the same layer as the gate electrode **101**. A common wiring formed on the TFT substrate **100** for supplying a common voltage to a counter electrode **204** of the counter substrate **200** is also formed simultaneously in the same layer. A gate insulating film **102** is formed so as to cover the gate electrode **101**. The gate insulating film **102** is formed by, for example, sputtering a SiN film. The gate insulating film **102** has a thickness of about 400 nm, for example.

[0061] A semiconductor layer **103** is formed above the gate electrode **101** via the gate insulating film **102**. The semiconductor layer **103** is formed of a-Si and has a thickness of about 150 nm. A channel region of a TFT is formed in the a-Si layer. Before disposing a source electrode **105** and a drain electrode **106** on the a-Si layer, an n+Si layer **104** is formed for establishing ohmic contact between the a-Si layer and the source electrode **105** or the drain electrode **106**.

[0062] The source electrode **105** or the drain electrode **106** is formed on the n+Si layer **104**. In the same layer as the source electrode **105** or the drain electrode **106**, a ground wire and the like connected to the video signal line, a protective diode, and the like are formed. The source electrode **105** or the drain electrode **106** is formed of Mo, Al, or the like. In the case of using Al, the upper and lower surfaces of an Al layer are covered with a Mo layer or the like. This is because when Al is in contact with ITO or the like in a contact hole **113** portion, a contact resistance sometimes becomes unstable.

[0063] After forming the source electrode **105** or the drain electrode **106**, channel etching is conducted using the source electrode **105** and the drain electrode **106** as masks. Etching is conducted to the upper portion of the a-Si layer for completely removing the n+Si layer **104** from the channel layer, so that a channel-etching region **109** is formed. Thereafter, an inorganic passivation film **107** is formed so as to cover the entire TFT. The inorganic passivation film **107** is formed of SiN. The inorganic passivation film **107** has a thickness of about 400 nm, for example.

[0064] An organic passivation film **108** is formed so as to cover the inorganic passivation film **107**. Since the organic passivation film **108** functions as a planarization film, it is formed thick. The organic passivation film **108** is formed to a thickness of about from 2 μm to 3 μm. An acrylic resin is used for the organic passivation film **108**, for example. Since a photosensitive acrylic resin is used for the organic passivation film **108**, patterning can be conducted without using a resist.

[0065] Thereafter, the contact hole **113** is formed through the organic passivation film **108** and the inorganic passivation film **107** for establishing electrical continuity between a pixel electrode **110** formed of ITO and the source electrode **105** of the TFT. In the display region **10**, an ITO film serving as the pixel electrode **110** is formed on the organic passivation film **108**.

[0066] In FIG. **2**, an alignment film **111** for aligning liquid crystal molecules is formed on the pixel electrode **110**. A liquid crystal layer **300** is interposed between the TFT substrate **100** and the counter substrate **200**. Initial alignment of liquid crystal molecules in the liquid crystal layer **300** is defined by the alignment film **111** formed on the TFT substrate **100** and an alignment film **111** formed on the counter substrate **200**.

[0067] In FIG. **2**, a black matrix **202** as a light shielding film is formed on the inner side of the counter substrate **200** so as to correspond to the position of the TFT. The black matrix functions as a light shielding film for the TFT and functions to improve the contrast of an image. A color filter **201** is formed at a portion where the black matrix **202** is not formed, that is, a portion forming a pixel.

[0068] In the pixel structure of FIG. **2**, the color filters **201** of the same color are formed in a stripe in the vertical direction as will be described later. The black matrixes are formed in a stripe in the horizontal direction corresponding to the scanning lines **30** formed on the TFT substrate **100**. The color filters **201** are continuously formed in a stripe in the vertical direction so as to cover the black matrixes **202**.

[0069] An overcoat film **203** is formed so as to cover the color filter **201** and the black matrix **202**. The overcoat film **203** functions to moderate irregularities on the surface and functions to protect the color filter against liquid crystal. However, the overcoat film is not essential and may not be used.

[0070] The counter electrode **204** is formed of an ITO film as a transparent conductive film on the overcoat film **203**. Voltage is applied between the pixel electrode **110** formed in the pixel of the TFT substrate **100** and the counter electrode **204** formed on the counter substrate **200** to rotate liquid crystal molecules, thereby controlling transmission light or reflection light to form an image.

[0071] A columnar spacer **205** for defining the gap between the counter substrate **200** and the TFT substrate **100** is formed on the counter electrode **204**. The columnar spacer **205** is formed at a portion where the black matrix **202** is formed and through which light of a backlight or the like does not transmit. This is because the alignment of liquid crystal is disturbed at the portion where the columnar spacer **205** is present to cause light leakage from the backlight or the like, thereby reducing the contrast.

[0072] The columnar spacer **205** has a height of, for example, from 3 μm to 4 μm, which is the same as the thickness of the liquid crystal layer **300**. The columnar spacer **205** is formed of a photosensitive acrylic resin, for example. When an acrylic resin is applied on the entire surface of the counter substrate **200** and exposed to light through a mask, only a portion exposed to light is rendered insoluble in a developer, and only the exposed portion is left as the columnar spacer **205**. Use of a photosensitive resin eliminates a resist step, thereby shortening the process.

[0073] The alignment film **111** is formed so as to cover the columnar spacer **205** and the counter electrode **204**. Initial alignment of the liquid crystal layer **300** is determined by the alignment film **111** formed on the TFT substrate **100** and the alignment film **111** formed on the counter substrate **200**. This alignment state is changed by rotating liquid crystal molecules with voltage applied between the pixel electrode **110** formed on the TFT substrate **100** and the counter substrate **200**, thereby controlling light transmitting through the liquid crystal layer **300** to form an image.

[0074] FIG. **3** is a cross-sectional view of a region S formed with the sealing material of the liquid crystal display device shown in FIG. **1**, showing a feature of the invention. In FIG. **3**, the scanning-line lead lines **31** are formed on the TFT substrate **100**, and the gate insulating film **102** covers the scanning-line lead lines **31**. Scanning-line lead lines **31** formed in a different layer are formed on the gate insulating film **102**. Although the scanning-line lead lines **31** extend in the vertical direction in the portion S in FIG. **1**, the scanning-line lead lines **31** are formed in two layers for reducing the area outside the display region (frame region) of the liquid crystal display device. The upper scanning-line lead lines **31** are formed in the same layer as the video signal lines **40** and connected to the scanning lines **30** at a not-shown portion via through holes.

[0075] The inorganic passivation film **107** is formed so as to cover the scanning-line lead lines **31** in the second layer. The organic passivation film **108** is formed so as to cover the inorganic passivation film **107**. In the seal portion, the pixel electrode **110** and the alignment film **111** are not formed on the organic passivation film **108**.

[0076] On the counter substrate **200** in FIG. **3**, the black matrix **202** is formed. On the black matrix **202**, a green color filter **201**G and a blue color filter **201**B are stacked and formed in an island shape. The green color filter **201**G is formed larger than the blue color filter **201**B. The overcoat film **203** is formed so as to cover the green color filter **201**G and the blue color filter **201**B. In the seal portion, the counter electrode **204** and the alignment film **111** are not formed on the overcoat film **203**.

[0077] In FIG. **3**, the columnar spacer **205** is formed on the overcoat film **203**. The sealing material **20** is filled around the columnar spacer **205**. A tip end of the columnar spacer **205** is in contact with the organic passivation film **108** formed on the TFT substrate **100**. In the invention, the gap between the TFT substrate **100** and the counter substrate **200** is defined by the columnar spacer **205** also in the seal portion.

[0078] The columnar spacer **205** in FIG. **3** is formed simultaneously with and by the same process as the columnar spacer **205** in the display region described with reference to FIG. **2**. Accordingly, even when a height HS of the columnar spacer **205** varies due to process variations, the height varies simultaneously in the display region and the seal portion. Therefore, the difference between the gap between the TFT substrate **100** and the counter substrate **200** in the display region and the gap in the seal portion does not change depending on the process.

[0079] A feather of the invention is in that the island-shaped color filter **201** having two layers is disposed below the columnar spacer **205**. As described with reference to FIG. **2**, the color filter **201** having one layer is formed below the columnar spacer **205** in the display region. In the invention, for assuring the reliability of the seal portion, the color filter **201** is not formed on the entire surface of the seal portion but is formed in an island shape. The overcoat film **203** is formed so as to cover the color filter **201** formed in an island shape.

[0080] Even when the color filter is manufactured under the same process conditions, the thickness thereof is smaller when it is formed in an island shape like in the seal portion than when it is formed wide in a stripe shape like in the display region. The overcoat film **203** on the color filter becomes thin when it is formed on the island-shaped color filter due to leveling effect. Accordingly, even when the height HS of the columnar spacer **205** is controlled so as to be the same in the display region and in the seal portion, the thickness of the color filter formed in an island shape and the thickness of the overcoat film **203** are reduced in the seal portion. Therefore, such a phenomenon occurs in the seal portion that the gap between the TFT substrate **100** and the counter substrate **200** is reduced.

[0081] In the invention, two layers of the island-shaped color filters **201**G and **201**B are formed below the columnar spacer **205** in the seal portion, whereby the gap between the TFT substrate **100** and the counter substrate **200** is controlled so as to be uniform in the display region and in the seal portion. As shown in FIG. **3**, although the pixel electrode **110**, the counter electrode **204**, the alignment film **111**, and the like are not formed in the seal portion, the thicknesses of these films are small and therefore fall within the error range compared to a change in thickness of the color filter **201** or the overcoat film **203**.

[0082] FIG. **4** is a cross-sectional view showing the shapes of the respective films on the counter substrate **200** side in the seal portion. In FIG. **4**, the black matrix **202** is formed in a solid manner on the counter substrate **200**. The island-shaped green color filter **201**G having a diameter ϕ**4** is formed on the black matrix **202**. The ϕ**4** is about from 60 μm to 80 μm, for example. The island-shaped blue color filter **201**B having a diameter ϕ**3** is formed on the island-shaped green color filter **201**G. The ϕ**3** is about 40 μm, for example.

[0083] The overcoat film **203** is formed so as to cover the black matrix **202**, the island-shaped green color filter **201**G, and the island-shaped blue color filter **201**B. The columnar spacer **205** is formed on the overcoat film **203**. The height HS of the columnar spacer **205** is, for example, from 3 μm to 4 μm, which is the same as that of the display region. The columnar spacer **205** has a diameter ϕ**2** of about 15 μm at a root and a diameter **41** of about 10 μm at a tip end.

[0084] FIG. **5** is a plan view showing a part of the display region of the counter substrate **200**. In FIG. **5**, the black matrixes **202** are formed on the counter substrate **200** so as to extend in the horizontal direction and are arranged in the vertical direction. Red color filters **201**R, the green color filters **201**G, and the blue color filters **201**B cover the black matrixes **202**, extend in the vertical direction, and are arranged in the horizontal direction at a specified pitch. A width X of each of the color filters **201** corresponds to the transverse diameter of a sub-pixel, which is 40 μm, for

example. A pitch Y of the black matrix **202** corresponds to the vertical diameter of the sub-pixel, which is 120 μm, for example.

[0085] In FIG. **5**, the columnar spacers **205** are formed on the blue color filter **201**B so as to correspond to portions where the black matrixes **202** are formed. FIG. **5** shows an example in which the columnar spacer **205** is formed in all sub-pixels corresponding to blue pixels. In FIG. **5**, for example, the vertical pitch of the columnar spacer **205** is 120 μm, and the horizontal pitch is also 120 μm. The forming density of the columnar spacers **205** may be smaller than that. The density of the columnar spacers **205** in the display region is determined depending on the conditions of use, for example, whether the liquid crystal display device is used as a touch panel or not.

[0086] FIG. **6** is a plan view showing a seal portion of the counter substrate **200** in the invention. In the seal portion, the columnar spacers **205** are arranged at a specified pitch, and the sealing material is formed around the columnar spacers **205**. Each of the columnar spacers **205** is formed on the green color filter **201**G and the blue color filter **201**B both formed in an island shape. In FIG. **6**, the overcoat film **203** is not illustrated.

[0087] A horizontal pitch d**2** of the columnar spacer **205** is, for example, 200 μm, and a vertical pitch d**3** is, for example, 500 μm. A distance d**1** between the columnar spacer **205** and an edge of the sealing material is, for example, 100 μm. Accordingly, the color filter **201** serving as a base of the columnar spacer **205** does not extend outside the sealing material.

[0088] FIG. **7** is a plan view showing another example of a seal portion of the counter substrate **200** in the invention. In FIG. **7**, a pitch d**4** of the columnar spacer **205** in the vertical direction is reduced to half that of FIG. **6**. Accordingly, the density of the columnar spacers **205** is doubled in FIG. **7** compared to that of FIG. **6**.

[0089] FIG. **8** is a plan view showing still another example of a seal portion of the counter substrate **200** in the invention. In FIG. **8**, a pitch d**5** of the columnar spacer **205** in the horizontal direction is reduced to half the pitch d**2** in the horizontal direction in FIG. **6** or **7**. A pitch d**6** in the vertical direction in FIG. **8** is reduced to half the pitch in the vertical direction in FIG. **7**. Accordingly, the density of the columnar spacers **205** is increased more in FIG. **8** than that of FIG. **7**.

[0090] FIGS. **7** and **8** show examples of the arrangement and density of the columnar spacers **205** in the seal portion, and various arrangements, in addition to the examples, can be adopted. Moreover, it is not necessary that the density of the columnar spacers **205** in the seal portion be the same as that of the display region. Depending on the intended use of the liquid crystal display device, the density of the columnar spacers **205** can be determined such that the density is most suitable for each of the display region and the seal portion.

Second Embodiment

[0091] FIG. **9** is a cross-sectional view of a seal portion according to a second embodiment of the invention. The configuration of a display region in the embodiment is the same as that of the first embodiment. In FIG. **9**, the gap between the TFT substrate **100** and the counter substrate **200** in the seal portion is determined by the columnar spacer **205** in the same manner as the first embodiment.

[0092] In the embodiment, the red color filter **201**R, the green color filter **201**G, and the blue color filter **201**B are stacked and formed in an island shape below the columnar spacer **205** in the seal portion. Since each of the color filters **201**R, **201**G, and **201**B is formed in an island shape, the thickness thereof is likely to be smaller than that of the color filter **201** formed in a stripe in the display region. Also the overcoat film **203** formed on the color filter becomes thin when it is formed on the island-shaped color filter due to the leveling effect.

[0093] As described above in the embodiment, the gap between the substrates is prevented from being different between the display region and the seal portion due to the reduced height of the base formed below the columnar spacer **205**. In the configuration of the first embodiment, the green color filter **201**G and the blue color filter **201**B are formed below the columnar spacer **205**, so that the gap between the substrates is controlled. In the embodiment, three layers of the color filters **201**R, **201**G, and **201**B are formed, so that the gap between the substrates is controlled.

[0094] On the other hand, it is advantageous for the reliability of the seal portion that the pressure within the liquid crystal cell be negative rather than positive. In this case, the gap between the substrates in the seal portion is slightly greater than that of the display region. In such a case, use of the configuration of the embodiment allows stable setting of the gap between the substrates.

[0095] FIG. **10** is a cross-sectional view showing the shapes of the respective films on the counter substrate **200** side in the seal portion. The configuration of FIG. **10** is the same as that of FIG. **4** except that the island-shaped red color filter **201**R is additionally disposed as the base of the columnar spacer **205**. Moreover, the diameter ϕ**1** of the columnar spacer **205** at the tip end and the diameter ϕ**2** at the root, the diameter ϕ**3** of the island-shaped blue color filter **201**B, and the diameter ϕ**4** of the island-shaped green color filter **201**G are the same as those of FIG. **4**. The diameter of the island-shaped red color filter **201**R in FIG. **10** is from 100 μm to 120 μm, for example.

[0096] FIG. **11** is a plan view of a seal portion in the embodiment. In FIG. **11**, the columnar spacers **205** are arranged at a predetermined pitch, and the sealing material is formed around the columnar spacers **205**. The configuration of FIG. **11** is the same as that of FIG. **4** of the first embodiment except that the island-shaped red color filter **201**R is formed, in addition to the island-shaped blue color filter **201**B and the island-shaped green color filter **201**G, at the portion where the columnar spacer **205** is formed.

[0097] For the arrangement of the columnar spacers **205** in the embodiment, not only the arrangement shown in FIG. **11** but also the arrangements of FIGS. **7** and **8** described in the first embodiment and other arrangements can be adopted.

Third Embodiment

[0098] FIG. **12** is a plan view of a seal portion according to a third embodiment of the invention. The configuration of FIG. **12** is different from that of the first embodiment or the second embodiment in that a weir **500** for stopping the alignment film **111** is disposed substantially at the central portion of the seal portion. The weir **500** is formed along the entire sealing material **20**.

[0099] The presence of the alignment film **111** between the sealing material and the substrate impairs the adhesive properties between the sealing material and the substrate. The alignment film **111** is applied in the display region in the form of liquid by an inkjet method or the like and thereafter solidified by baking. Upon applying the alignment film **111** in the

form of liquid, when the alignment film **111** flows into the seal portion, the reliability of the seal portion is reduced.

[0100] In the embodiment, for preventing the alignment film **111** in the form of liquid from entering the entire seal portion even if the alignment film flows into the seal portion, the weir **500** for stopping the alignment film **111** is formed in the vicinity of the central portion of the seal portion. With this configuration, even if the alignment film **111** flows into the seal portion, the adhesion between the sealing material and the substrate can be sufficiently assured in the half region of the sealing material. Therefore, the reliability of the seal portion can be assured.

[0101] In FIG. **12**, the weir **500** can be formed of the same material and by the same process as the columnar spacer **205**. However, since the color filter **201** is not disposed below the weir **500**, a tip end of the weir **500** is positioned lower than that of the columnar spacer **205** by the amount of the color filter. Accordingly, the gap between the TFT substrate **100** and the counter substrate **200** in the seal portion is defined by the columnar spacer **205**.

[0102] In FIG. **12**, the columnar spacers **205** are arranged so as to avoid the weir **500**. The pitch, arrangement, and the like of the columnar spacers **205** in FIG. **12** is the same as those of FIG. **6** in the first embodiment. In addition, the various arrangements shown in the first embodiment can be adopted for the arrangement of the columnar spacers **205** in the seal portion as long as they are arranged so as to avoid the weir **500**.

[0103] FIG. **13** is a cross-sectional view of the seal portion of the liquid crystal display device corresponding to a D-D cross-section in FIG. **12**. That is, FIG. **13** shows the cross-section in which the weir **500** formed on the counter substrate **200** is interposed between the columnar spacers. In FIG. **13**, the columnar spacers **205** are arranged on the counter substrate **200** side with the weir **500** interposed therebetween. The configuration of each of the columnar spacers **205** is the same as that described with reference to FIG. **3** of the first embodiment. In FIG. **13**, the weir **500** is formed on the overcoat film **203**. The weir **500** does not have a columnar shape but linearly extends in a direction perpendicular to the paper surface so as to surround the entire periphery of the display region.

[0104] The weir **500** is formed of the same material and by the same process as the columnar spacer **205**. Accordingly, the height HS of the columnar spacer **205** is the same as the height HS of the weir **500**. However, since the base formed of the green color filter **201**G and the blue color filter **201**B is not formed below the weir **500**, the tip end of the weir **500** is positioned lower than that of the columnar spacer **205**. Accordingly, the gap between the TFT substrate **100** and the counter substrate **200** in the seal portion is determined by the columnar spacer **205**.

[0105] In FIG. **13**, the height HS of the weir **500** is equal to the height HS of the columnar spacer **205**. For the effect of stopping the alignment film **111**, the height of the weir **500** may be lower than the height HS of the columnar spacer **205**. For making the height of the weir **500** less than that of the columnar spacer **205**, the width of the weir **500** is made less than the diameter of the columnar spacer **205**. Even in the same process, the height can be made small when the width is small because of the nature of photolithography.

[0106] The display region is shown on the left of FIG. **13**, where the alignment film **111** is formed. FIG. **13** shows a state where the alignment film **111** in the form of liquid flows into the seal portion when the alignment film **111** is applied in the display region, and the alignment film **111** is stopped by the weir **500**. Since the alignment film does not flow outside the weir **500**, the alignment film **111** is not present between the sealing material and the substrate outside the weir **500**. Accordingly, high reliability can be assured in the seal portion at least outside the weir **500**.

[0107] The configuration of the columnar spacer **205** formed on the counter substrate **200** in FIG. **13** is the same as that described in the first embodiment. The other configurations of the counter substrate **200** are the same as those described with reference to FIG. **1**. The configuration of the TFT substrate **100** in FIG. **13** is the same as that described with reference to FIG. **3** of the first embodiment. The configuration of the display region in the embodiment is the same as that described with reference to FIG. **2** of the first embodiment.

[0108] According to the invention as described above, since the weir **500** for preventing the spreading of the alignment film into the seal portion is formed within the seal portion, even if the alignment film flows into the seal portion, the minimum adhesive strength of the sealing material can be assured. Since the weir **500** can be formed by the same process as that of the columnar spacer **205**, the number of processes does not increase due to the formation of the weir **500**.

[0109] While there have been described what are at present considered to be certain embodiments of the invention, it will be understood that various modifications may be made thereto, and it is intended that the appended claims cover all such modifications as fall within the true spirit and scope of the invention.

What is claimed is:

1. A liquid crystal display device comprising:

a TFT substrate having a display region where pixels each having a TFT and a pixel electrode are formed in a matrix;

a counter substrate having a display region where color filters of three colors are formed in a matrix,

the TFT substrate and the counter substrate being bonded together with a sealing material in a seal portion at a periphery; and

liquid crystal sealed between the TFT substrate and the counter substrate, wherein

in the display region, a gap between the counter substrate and the TFT substrate is defined by a first columnar spacer formed on the counter substrate, and one color filter among the color filters of three colors is present below the first columnar spacer; and

in the seal portion, a gap between the counter substrate and the TFT substrate is defined by a second columnar spacer formed on the counter substrate, a first color filter among the color filters of three colors is formed in an island shape below the second columnar spacer, and a second color filter is stacked and formed in an island shape on the first color filter.

2. The liquid crystal display device according to claim **1**, wherein an overcoat film is present between the first columnar spacer and the color filter in the display region, and an overcoat film is present between the second columnar spacer and the second color filter in the seal portion.

3. The liquid crystal display device according to claim **1**, wherein the first color filter is a green color filter, and the second color filter is a blue color filter.

4. A liquid crystal display device comprising:

a TFT substrate having a display region where pixels each having a TFT and a pixel electrode are formed in a matrix;

a counter substrate having a display region where color filters of three colors are formed in a matrix,

the TFT substrate and the counter substrate being bonded together with a sealing material in a seal portion at a periphery; and

liquid crystal sealed between the TFT substrate and the counter substrate, wherein

in the display region, a gap between the counter substrate and the TFT substrate is defined by a first columnar spacer formed on the counter substrate, and one color filter among the color filters of three colors is present below the first columnar spacer; and

in the seal portion, a gap between the counter substrate and the TFT substrate is defined by a second columnar spacer formed on the counter substrate, a first color filter among the color filters of three colors is formed in an island shape below the second columnar spacer, a second color filter is stacked and formed in an island shape on the first color filter, and a third color filter is stacked and formed in an island shape on the second color filter.

5. The liquid crystal display device according to claim **4**, wherein an overcoat film is present between the first columnar spacer and the color filter in the display region, and an overcoat film is present between the second columnar spacer and the third color filter in the seal portion.

6. The liquid crystal display device according to claim **4**, wherein the first color filter is a red color filter, the second color filter is a green color filter, and the third color filter is a blue color filter.

7. A liquid crystal display device comprising:

a TFT substrate having a display region where pixels each having a TFT and a pixel electrode are formed in a matrix;

a counter substrate having a display region where color filters of three colors are formed in a matrix,

the TFT substrate and the counter substrate being bonded together with a sealing material in a seal portion at a periphery; and

liquid crystal sealed between the TFT substrate and the counter substrate, wherein

in the display region, a gap between the counter substrate and the TFT substrate is defined by a first columnar spacer formed on the counter substrate, and one color filter among the color filters of three colors is present below the first columnar spacer;

in the seal portion, a gap between the counter substrate and the TFT substrate is defined by a second columnar spacer formed on the counter substrate, a first color filter among the color filters of three colors is formed in an island shape below the second columnar spacer, and a second color filter is stacked and formed in an island shape on the first color filter; and

in the seal portion, a weir formed on the counter substrate is formed so as to surround the display region, and the color filters are not present below the weir.

* * * * *