UNITED STATES PATENT AND TRADEMARK OFFICE

BEFORE THE PATENT TRIAL AND APPEAL BOARD

INFINEON TECHNOLOGIES AMERICAS CORP.,
Petitioner,

v.

MOSAID TECHNOLOGIES INC.,
Patent Owner.

Case IPR2025-01487
Patent 9,972,381

EXHIBIT 2026

DECLARATION OF SUNIL P. KHATRI, Ph.D.

TABLE OF CONTENTS

Page

I. INTRODUCTION 1

II. QUALIFICATIONS 1

III. BASES OF OPINIONS 6

IV. APPLICABLE LEGAL STANDARDS 7

- **A. Level Of Ordinary Skill In The Art 7**
- **B. My Understanding Of Legal Standards 9**

V. CLAIMS AT ISSUE (CLAIMS 1–21) 12

VI. OPINIONS 13

- **A. Petitioner Does Not Show A Motivation To Combine. 13**
- **B. Petitioner Does Not Show The Claimed "status register" In Grundy-Kilbuck. 19**

VII. CONCLUSION 25

I. INTRODUCTION

1. My name is Sunil P. Khatri. I have been retained as an expert witness to provide my independent opinion in regard to the matters at issue in *inter partes* review of U.S. Patent No. 9,972,381 ("the '381 patent") in IPR2025-01487. I have been retained by MOSAID Technologies Inc. ("MOSAID" or "Patent Owner"), the Patent Owner in this proceeding. The Petitioner in this proceeding is Infineon Technologies Americas Corp. ("Infineon" or "Petitioner").

2. I am being compensated at my regular hourly rate for my time spent working in connection with this case. My compensation is in no way related to the outcome of this litigation. If called as a witness, I would testify as to the statements and opinions contained in this report.

3. I am not a legal expert and offer no opinions on the law. However, I have been informed by counsel of the various legal standards that apply, and I have applied those standards in arriving at my conclusions.

II. QUALIFICATIONS

4. I have over thirty-eight years of experience with electronics, electrical engineering, and computer engineering. During my career, I have acquired extensive knowledge and experience with memory technologies and serial as well as parallel interfaces.

5. I earned my Bachelor of Science in Electrical Engineering in 1987 from the Indian Institute of Technology, Kanpur, India. After graduating with my B.S. degree, I was a candidate for a Master of Science degree in Electrical and Computer Engineering at the University of Texas from 1987–89. At the University of Texas, I held the Microelectronics and Computer Development (MCD) Fellowship from 1987–89. I also conducted my M.S. research and wrote my thesis on the design of the METRIC memory interface and memory system. METRIC was one of the first super-scalar processors that was developed in the world. I earned an M.S. degree in 1989 from the University of Texas, Austin.

6. After leaving the University of Texas, I worked at Motorola Inc. from 1989–93 as a design engineer for the MC88110 RISC microprocessor team, followed by the PowerPC 603 RISC microprocessor design team. My duties included the design of digital and analog circuitry, test logic circuits, layout, JTAG boundary scan design, input/output driver design, and clock phase-locked loop (PLL) logic and clock distribution. During my time at Motorola, I was independently responsible for the design of the factory test controller of the MC88110 microprocessor. I performed all attendant tasks in a "vertical" VLSI design methodology, which included high-level modeling, circuit and layout design and verification, as well as global and detailed routing. I also helped in the design

MOSAID Technologies Inc., Exhibit 2026
Page 2026 - 4
IPR2025-01487, Infineon Technologies Americas Corp. v. MOSAID Technologies Inc.

of the Translation Lookaside Buffer (TLB) unit, which included a static random-access memory (SRAM) block.

7. In 1999, I earned a Doctor of Philosophy degree in Electrical Engineering and Computer Sciences from the University of California, Berkeley. While at Berkeley, I held the California Microelectronics (MICRO) Fellowship in 1993. I joined the faculty at the University of Colorado, Boulder, in 2000 as an Assistant Professor of Electrical and Computer Engineering. At the University of Colorado, my research focused on VLSI logic design automation, VLSI layout design automation, and VLSI design methodologies to address Deep Submicron (DSM) issues such as crosstalk and power.

8. I joined the faculty at Texas A&M University in 2004 as an Assistant Professor in Electrical and Computer Engineering. In 2010, I was promoted to Associate Professor in Electrical and Computer Engineering. In 2015, I was promoted to full Professor in Electrical and Computer Engineering. I teach and have taught classes that cover flash-based accelerators of various special functions, digital systems design, and microprocessor systems design, among many other topics.

9. My research focuses on three primary areas: the first is computer systems, including computer architecture from the circuits up, and algorithm acceleration using GPUs, FPGAs and custom ICs. The second is logic and its applications, including genomics, noise based logics, and Boolean Satisfiability

MOSAID Technologies Inc., Exhibit 2026
Page 2026 - 5
IPR2025-01487, Infineon Technologies Americas Corp. v. MOSAID Technologies Inc.

solvers user GPUs, FPGAs, and custom ICs. The third area consists of interdisciplinary extensions of the first two, such as IP routing, Digital Signal Processing (for FFT and radar signal processing), optical networking, wireless communication and coding, cryptography, satellite tracking, drone routing, graph network analytics and gene sequencing. Part of my research has involved volatile and non-volatile memory technologies and serial as well as parallel interfaces, as can be seen in the list of my publications in Exhibit A.

10. Since 2000, I have earned 24 research contracts from funders including Intel, the National Science Foundation, the National Security Agency, Altera Corporation, the National Center for Atmospheric Research, National Semiconductor Corporation, and several private sources. The total amount for these research grants is $18.96 million, of which my portion is $3.524 million.

11. I have a total of over 291 peer-reviewed publications. Among these papers, five received a best paper award, while seven others received best paper nominations (including one journal best paper nomination). An additional three journal papers and one conference paper are currently undergoing peer review. I have coauthored nine research monographs, one edited research monograph, and four book chapters. Additionally, I have seven awarded U.S. Patents (one of which was filed during my tenure at Texas A&M), two filed provisional U.S. Patents, and another U.S. Patent which is currently under review and was also submitted during

MOSAID Technologies Inc., Exhibit 2026
Page 2026 - 6
IPR2025-01487, Infineon Technologies Americas Corp. v. MOSAID Technologies Inc.

my tenure at Texas A&M. I have co-authored one invited journal paper and 13 invited conference or workshop papers (including one from Design Automation Conference (DAC) and one from Allerton). Moreover, I was invited to serve as a panelist at a conference eight times and have presented four conference tutorials. I received the "Outstanding Professor Award" in the ECE Department at Texas A&M University in 2007 and also in 2020. My H-index is 36 (per Google Scholar).

12. I have also served as an editor for IEEE Transactions on Computers, ACM Transactions on Design Automation of Electronic Systems, and MDPI Journal of Electronics. I have served as EDA Track Co-Chair for ICECS 2014, Panel Chair for TexasWISE 2014, Track Co-Chair (VLSI Systems, Applications and Computer Aided Design track) for ICECS 2013, Poster Session Chair for TexasWISE 2013, Advisory Committee for HotPI 2013, Panel Session Chair for SLiP 2013, Track Chair (Logic track) for ICCAD 2009-10, 2015-17, Track Chair (logic track) for DAC 2016-17, General Chair for IWLS 2009, Technical Program Chair for IWLS 2008, Track Co-Chair, Computer Aided Network DEsign (CANDE) Track, for ISCAS 2008-10, Track Co-chair for the DSP track for ISCAS 2022, Track Co-Chair, Test and Methodologies Track, for ICCD 2007, Panel Chair for ITSW 2009, Publicity Co-Chair for GLS-VLSI 2009, and as a member of the TPC for several conferences.

13. A detailed record of my professional qualifications is set forth in the attached Exhibit A, which is my *curriculum vitae*, including a list of publications,

MOSAID Technologies Inc., Exhibit 2026
Page 2026 - 7
IPR2025-01487, Infineon Technologies Americas Corp. v. MOSAID Technologies Inc.

awards, research grants, and professional activities. My *curriculum vitae* also lists the matters in which I have served as an expert.

III. BASES OF OPINIONS

14. Petitioner has submitted the following list of exhibits with its Petition. In the course of conducting my analysis and forming my opinions, I have reviewed the materials including from the list below to the extent needed to form my opinions:

i. U.S. Patent No. 9,972,381 (Ex. 1001) ("the '381 patent"),

ii. U.S. Patent No. 9,972,381 File History (Ex. 1002),

iii. Expert Declaration of Carl Sechen, Ph.D (Ex. 1003) ("Sechen-Decl."),

iv. Curriculum Vitae of Carl Sechen, Ph.D (Ex. 1004),

v. U.S. Patent App. Pub. 2004/0148482 to Grundy et al. (Ex. 1005) ("Grundy"),

vi. U.S. Patent App. Pub. 2005/0204091 to Kilbuck et al. (Ex. 1006) ("Kilbuck"),

vii. Petitioner's excerpts from Wiley Electrical and Electronics Engineering Dictionary, 2004 (Ex. 1007),

viii. T. Tanaka et al., "A quick intelligent page-programming architecture and a shielded bitline sensing method for 3 V-only NAND flash memory," in IEEE Journal of Solid-State Circuits, vol. 29, no. 11, pp. 1366-1373, Nov. 1994, doi: 10.1109/4.328638 (Ex. 1008) ("Tanaka"),

MOSAID Technologies Inc., Exhibit 2026
Page 2026 - 8
IPR2025-01487, Infineon Technologies Americas Corp. v. MOSAID Technologies Inc.

ix. P. Cappalletti et al., "Flash Memories," Kluwer Academic Publishers, 1999 (excerpts) (Ex. 1009) ("Cappalletti"),

x. Complaint, MOSAID Techs. Inc. v. Infineon Techs. AG et al., W.D. Tex., filed March 25, 2025 (Ex. 1010),

xi. The exhibits and other documents cited herein.

IV. APPLICABLE LEGAL STANDARDS

A. Level Of Ordinary Skill In The Art

15. My understanding of a "person of ordinary skill in the art" is as described to me by the attorneys for MOSAID. My opinions in this declaration are based on the understandings of a person of ordinary skill in the art, which I understand is sometimes referred to as an "ordinary artisan" or by the acronyms "POSITA," "POSA," or "PHOSITA," as of the time of the invention. I understand that the earliest provisional application to which the '381 patent claims priority was filed on September 30, 2005—a date that the Petition refers to as the "Critical Date." Pet. 2. Accordingly, I treat this date as the time of the inventions claimed in the '381 patent. I reserve the right to revisit this issue should the Petition be instituted, or should Petitioner make arguments premised upon some other date being taken as the date of invention. I have been told that the person of ordinary skill in the art is a hypothetical person who is presumed to have known the relevant art at the time of

the invention. I am instructed that in this context, "relevant" means relevant to the challenged claims of the '381 patent.

16. I have been told that factual indicators of the level of ordinary skill in the art include the various prior art approaches employed, the types of problems encountered in the art, the rapidity with which innovations are made, the sophistication of the technology involved, and the educational background of those actively working in the field. I have been told that, in assessing the level of skill of a person of ordinary skill in the art, one should consider the type of problems encountered in the art, the prior solutions to those problems found in the prior art references, the rapidity with which innovations are made, the sophistication of the technology, the level of education of active workers in the field, and my own experience working with those of skill in the art at the time of the invention.

17. In this case, Dr. Sechen has asserted in his declaration that a person of ordinary skill in the art as of the time of the '381 patent would have had

> *a bachelor of science degree in electrical engineering, computer engineering, or a related field, and at least three years of experience in the research, design, or development of electronic memory circuits. Additional education could substitute for experience and vice versa.*

Ex. 1003 [Sechen-Decl.] ¶ 31; *see also* Pet., 8.

MOSAID Technologies Inc., Exhibit 2026
Page 2026 - 10
IPR2025-01487, Infineon Technologies Americas Corp. v. MOSAID Technologies Inc.

18. For purposes of this declaration, I accept Dr. Sechen's proposed qualifications of a POSITA. I reserve the right to revisit the issue should the Petition be instituted.

19. As further discussed below, my opinions as stated in this declaration are valid even if the Board adopts a somewhat higher or somewhat lower level of ordinary skill in the art than proposed. For example, as will be discussed throughout my report, a person with the level of knowledge or experience described by Dr. Sechen would not have a had a motivation to combine the elements of the cited art as proposed by Petitioner as of the priority date of the '381 patent, and I would hold this opinion even if the Board adopted a somewhat higher or somewhat lower level of ordinary skill in the art. But should the Petition be instituted with a somewhat higher or somewhat lower level of ordinary skill in the art than the level proposed by Dr. Sechen, I reserve the right to revisit this issue.

20. In this report, the absence of an expressed opinion about any section or paragraph of the Petition or Dr. Sechen's declaration, does not indicate my agreement with the section or paragraph.

B. My Understanding Of Legal Standards

21. When considering the '381 patent and stating my opinions, I rely on the following legal standards as described to me by the attorneys for MOSAID.

MOSAID Technologies Inc., Exhibit 2026
Page 2026 - 11
IPR2025-01487, Infineon Technologies Americas Corp. v. MOSAID Technologies Inc.

22. I understand that a patent claim is unpatentable if the claimed invention was anticipated by a prior art reference or would have been obvious to a person of ordinary skill in the art at the time of the purported invention.

23. I understand that anticipation requires that every limitation of the claim at issue be disclosed, either expressly or under principles of inherency, in a single prior art reference.

24. I understand that inherency may not be established by probabilities or possibilities. The mere fact that a certain thing may result from a given set of circumstances is not sufficient. Instead, it must be proven that the claim limitation not expressly found in the reference necessarily follows from what is found there.

25. I understand that an obviousness analysis involves comparing a claim to the prior art to determine whether the claimed invention would have been obvious to a person of ordinary skill in the art at the time of the invention in view of the prior art and in light of the general knowledge in the art as a whole. I also understand that obviousness is ultimately a legal conclusion based on underlying facts of four general types, all of which must be considered: (1) the scope and content of the prior art; (2) the level of ordinary skill in the art; (3) the differences between the claimed invention and the prior art; and (4) any objective indicia of non-obviousness.

26. I also understand that obviousness may be established under certain circumstances by combining or modifying the teachings of the prior art. Specific

teachings, suggestions, or motivations to combine any first prior art reference with a second prior art reference can be explicit or implicit, but must have existed before the date of purported invention. I understand that prior art references themselves may be one source of a specific teaching or suggestion to combine features of the prior art, but that such suggestions or motivations to combine art may come from the knowledge that a person of ordinary skill in the art would have had.

27. I understand that a reference may be relied upon for all that it teaches, including uses beyond its primary purpose, but also including teachings that lead away from the invention. I understand that a reference may be said to teach away when a person of ordinary skill, upon reading the reference, would be discouraged from following the path set out in the invention, although the mere disclosure of alternative designs does not teach away.

28. I further understand that whether there is a reasonable expectation of success in combining references in a particular way is also relevant to the analysis.

29. I understand that it is improper to use hindsight to combine references or elements of references to reconstruct the invention using the claims as a guide. My analysis of the prior art is made from the perspective of a person of ordinary skill in the art at the time of the invention.

30. I am not offering any legal opinions in this declaration nor am I qualified to do so. I only consider such legal standards in framing my opinions and

conclusions as well as placing assertions made by Petitioner in the Petition into the proper context. Additionally, from a subject matter perspective, I understand that the petitioner always has the burden of persuasion regarding a challenge of patentability of an invention under an inter partes review.

V. CLAIMS AT ISSUE (CLAIMS 1–21)

31. I understand that Petitioner has challenged the claims 1-21 of the ’381 patent in a single ground, based on obviousness over Grundy in view of Kilbuck. Pet., 1. Although the ’381 patent has two independent claims, claim 1 and claim 17, all of Petitioner’s arguments relating to independent claim 17 incorporate the elements of Petitioner’s arguments relating to independent claim 1. *See generally* Pet., 42-47. Similarly, Petitioner’s arguments regarding dependent claims 2-16 (which depend from claim 1) and 18-21 (which depend from claim 17) each incorporate Petitioner’s arguments regarding the relevant independent claims. Accordingly, the Petition focuses in large part on Petitioner’s arguments regarding independent claim 1, and I accordingly have focused my analysis on independent claim 1. For the reasons just mentioned, however, any issues I discuss in claim 1 also relate, via Petitioner’s incorporation of its arguments about claim 1 into other arguments, to all challenged claims of the ’381 patent.

32. I reserve the right to supplement the opinions expressed here—including, for example, with respect to issues that only affect dependent claims—in the event that trial is instituted.

VI. OPINIONS

A. Petitioner Does Not Show A Motivation To Combine.

33. The Petitioner offers only one ground: obviousness in view of what Petitioner terms "Grundy–Kilbuck," which is some combination of Grundy and Kilbuck. *See* Pet., 1. Petitioner does not contend that either Grundy or Kilbuck alone renders the claims obvious. *See id.* As I will explain below, however, the Petition never defines what the "Grundy–Kilbuck" system actually is, or how any alleged teachings of Kilbuck would be integrated into Grundy.

34. Petitioner's element-by-element analysis of claim 1 begins with Grundy, and in particular, with Grundy's Figure 3. *See* Pet. 17-18. Grundy's Figure 3 depicts a memory controller 101 coupled to a chain of memory devices 107, each having its own signaling interface 111 and storage array 115:

MOSAID Technologies Inc., Exhibit 2026
Page 2026 - 15
IPR2025-01487, Infineon Technologies Americas Corp. v. MOSAID Technologies Inc.

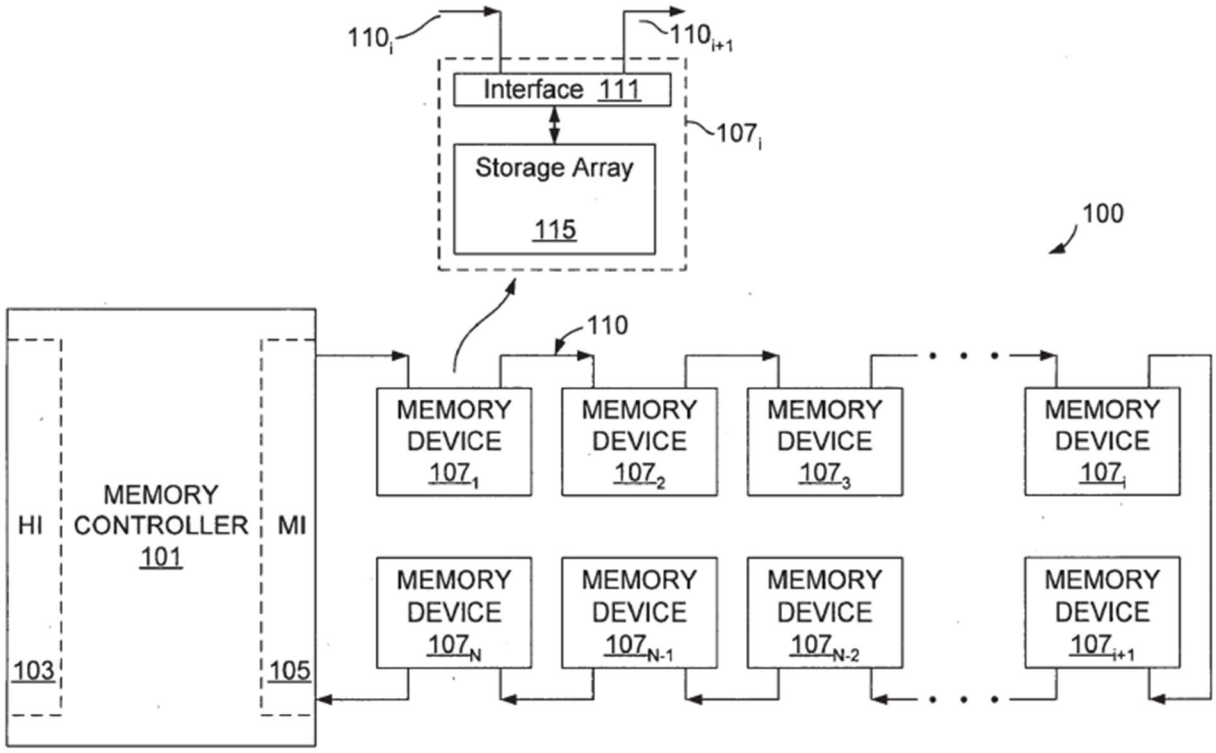

Ex. 1005 [Grundy] Fig. 3; *see also* [0035]. Grundy explains that its "storage arrays" need not be homogeneous, and may include arrays of different types (including "magnetic and optical media"), but also that each "storage array" has a single point of access and control, such that "separate memory controllers for the various storage types are not needed." *Id.*, [0035].

35. Petitioner relies upon Grundy's memory devices as the claimed "memory device[s]" (Pet. 17-18) and elsewhere relies exclusively on Grundy for various claim limitations. *See, e.g.*, Pet., 25-28 (relying exclusively on Grundy for the claimed "common data interface"), 31-34 (same, for the claimed "control input port").

36. Petitioner generally describes the role of Kilbuck in its "Grundy-Kilbuck" combination by stating, for example, that "Kilbuck provides additional details of flash memory systems including its associated circuitry," Pet., 13. Petitioner further characterizes "the Grundy–Kilbuck Combination" as "the application of a known technique (Kilbuck's techniques for implementing flash memory) to a known system (Grundy's memory system) to achieve predictable results (a memory system with flash memory and supportive circuitry)" in which "[e]ach element in combination merely performs the same function as it does separately." Pet. 16.

37. Beyond these high-level characterizations, however, the Petition never identifies what "details" from Kilbuck are incorporated into Grundy's memory devices 107, or how. When combining memory circuitry, such specifics are crucially important – without them, the alleged "combination" would simply not function.

38. Petitioner does not, for example, state that an unmodified Kilbuck flash memory device literally plays the role of one of Grundy's memory devices 107 in the combined "Grundy-Kilbuck" system. And Petitioner does not describe what modifications are made to Grundy's devices and controller when Kilbuck's "details" are imported to it in "Grundy-Kilbuck." Instead, and as already mentioned, Petitioner relies on high-level formulations—"applies Kilbuck's teachings," "turn to

references like Kilbuck," "incorporate supportive flash memory circuitry"—and then, in its discussion of particular claim limitations, repeatedly alternates a Grundy citation with a Kilbuck citation linked by boilerplate such as "[t]o the extent that it is argued that Grundy does not teach or suggest this aspect, Kilbuck does." Examples of this include the following:

- "To the extent that it is argued that Grundy does not teach or suggest this aspect of [1a], Kilbuck describes that flash memory includes a plurality of erasable blocks." Pet., 20.
- "To the extent that it is argued that Grundy does not teach or suggest this aspect of [1a], Kilbuck does." *Id.*, 21.
- "To the extent that it is argued that Grundy does not teach or suggest this aspect of [1a], Kilbuck does." *Id.*, 22.
- "To the extent that it is argued that Grundy does not teach or suggest this aspect of [1e], Kilbuck does." *Id.*, 37.
- "To the extent that it is argued that Grundy does not teach or suggest this aspect of [1e], Kilbuck does." *Id.*, 39.
- "To the extent that it is argued that Grundy does not teach or suggest this limitation, Kilbuck does." *Id.*, 41.
- "To the extent that it is argued that Grundy does not teach or suggest this limitation, Kilbuck does." *Id.*, 46.

MOSAID Technologies Inc., Exhibit 2026
Page 2026 - 18
IPR2025-01487, Infineon Technologies Americas Corp. v. MOSAID Technologies Inc.

- "To the extent that it is argued that Grundy does not teach or suggest [15], Kilbuck does." *Id.*, 73.

39. None of these statements identifies the resulting "Grundy–Kilbuck" flash memory device with particularity, beyond stating that whatever Grundy lacks, Kilbuck "does."

40. Petitioner's failure to articulate what "Grundy-Kilbuck" is prevents Petitioner from showing that a POSITA would be motivated or able to make it with a reasonable expectation of success. To belabor the relevant point, in order to understand why Petitioner argues that a POSITA would be motivated to arrive at "Grundy-Kilbuck," one needs to know what "Grundy-Kilbuck" actually is. Without defining how this combination is structured, Petitioner cannot show a motivation to combine or reasonable expectation of success.

41. The "status register" limitations that appear in all challenged claims illustrate this fundamental problem with Petitioner's argument. Petitioner does not identify any disclosure of any "status register" in Grundy, but asserts that a POSITA could have understood Grundy's "status response" to be backed by "memory such as a register." Pet. 40-41 (Petitioner's limitation [1f]). Petitioner argues that "[t]o the extent that it is argued that Grundy does not teach or suggest this limitation, Kilbuck does," because Kilbuck discloses an "internal status register/flag" that "may be monitored to indicate the status of the memory," and that it "would have been

obvious to include in Grundy's memory device a status register as taught in Kilbuck." Pet. 41.

42. With this discussion, Petitioner is not merely relying on Kilbuck simply to provide details of flash media already present in Grundy that Grundy is simply silent upon; Petitioner is proposing some kind of structural change to Grundy's memory device—adding per-device status registers, where none are disclosed. This change in Grundy's memory devices implies other changes, such as changes to Grundy's protocol engine and controller logic, so that they can access and interpret the contents of these alleged registers that are not present in unmodified Grundy. But the Petition never explains what circuitry (if any) would be added to Grundy's devices to implement these changes, or how those new status registers would interact with Grundy's existing framework for communication between its controller and its memory devices, even on a functional level, or even why this would be useful in Grundy, which teaches "simplifying the interface control circuitry". Grundy, 0033. In failing to do these things, Petitioner cannot explain why a POSITA would have chosen to make those particular implementation choices (which, to be clear, depart from a path that the Grundy system already describes).

43. Petitioner repeatedly addresses the differences between the art and the claims with the same template: Petitioner cites Grundy if possible; and if Grundy is silent, Petitioner cites Kilbuck for some feature, and asserts that it would have been

MOSAID Technologies Inc., Exhibit 2026
Page 2026 - 20
IPR2025-01487, Infineon Technologies Americas Corp. v. MOSAID Technologies Inc.

"obvious to include" that feature because such details were well known. *See, e.g.*, Pet. 40–42 (Petitioner's limitation [1f]); 50–53 (claims 3, 18); 66–70 (claims 13, 21), 73–74 (claim 15). Nowhere does the Petition pause to identify any ***differences*** between the claimed "flash memory device" and Grundy's chain architecture, or to set out any specific modifications to Grundy's circuitry or software that would be required to integrate Kilbuck's status register into a "Grundy-Kilbuck" system. Accordingly, I do not agree with Petitioner and Petitioner's expert that a POSITA would have been motivated to combine Grundy and Kilbuck as proposed, let alone do so with a reasonable expectation of success.

B. Petitioner Does Not Show The Claimed "status register" In Grundy-Kilbuck.

44. Independent claim 1 requires "a status register configured to indicate a status of the flash memory device" while independent claim 17 requires the step of "providing a read status command to access [a] status register and determine a status of the flash memory device." Ex. 1001 ['381] cls. 1, 17.[1] Petitioner labels these limitations [1f] and [17f], respectively. *See* Pet., iv, vii. All of the Petitioner's arguments that its combination teaches a "status register" depend upon the arguments that Petitioner makes in connection with claim 1, with what Petitioner labels limitation [1f]. *See, e.g.*, Pet., 46 (Petitioner's discussion of independent claim

[1] Claims 1 and 17 are the only independent claims in the '381 patent.

17 referring back to Petitioner's claim 1 argument for the assertion that "Grundy-Kilbuck provides a status register"). In my opinion, Petitioner does not show that its Grundy-Kilbuck combination discloses or renders obvious these "status register" limitations. I will focus my analysis on claim 1 because (as just explained) Petitioner's own analysis for all other claims relies upon its analysis on claim 1.

45. Petitioner does not purport to identify any "status register" in Grundy, and in doing so, effectively admits that Grundy does not disclose any "status register." Pet., 40-41. Instead, for limitation [1f], Petitioner first relies on Grundy's disclosure that its memory devices can receive "status requests" and provide "status responses," and then asserts that a person of ordinary skill "would have understood or at least found obvious that data representative of Grundy's status response would be available from memory such as a register to ensure the memory device could obtain the status response data to return in response to a status request." *Id*., 40-41. Petitioner adds that "[r]egisters were well known and commonly implemented … for the purpose of storing information such as status data." *Id*., 41.

46. To any extent that Petitioner's point is only that a POSITA would recognize that it is possible (and even common) to store data in registers, I do not disagree. But to any extent that Petitioner intends these statements to argue argument that Grundy alone teaches the claimed "status register" in the sense of claim 1, I do not agree.

MOSAID Technologies Inc., Exhibit 2026
Page 2026 - 22
IPR2025-01487, Infineon Technologies Americas Corp. v. MOSAID Technologies Inc.

47. None of the disclosures that Petitioner points to in connection with its discussion of a "status register" in Grundy indicates that Grundy's unmodified system would actually use "status registers." Petitioner quotes, for example, Grundy's disclosures that its memory devices "monitor commands that propagate through the memory chain to determine if the commands require responsive action" (where a "responsive action" may be a "status response"), Pet., 40 (quoting Ex. 1005 [Grundy] [0032]). As another example, Petitioner quotes a disclosure that "commands issued in short-form command packets" issued by Grundy's controller may be "interpreted by the target memory devices as status read . . . commands." *Id.* (quoting Ex. 1005 [Grundy] [0068]). Petitioner does not expressly argue that these disclosures mean that a "status register" is ***necessarily*** used in Grundy's memory devices to respond to "commands" from Grundy's controller, and Grundy does not disclose that any "status registers" would ***necessarily*** be used in implementation of its system.[2] A POSITA would recognize that providing Grundy's "status response"

[2] Petitioner does argue that "A POSITA would have understood or at least found obvious that data representative of Grundy's status response would be available from memory such as a register to ensure the memory device could obtain the status response data to return in response to a status request." Pet., 41. But I do not understand this argument about what a POSITA might "at least [have] found obvious" to take the position that an implementation of Grundy would ***necessarily*** involve status registers. At most, Petitioner appears to argue that an implementation of Grundy ***could*** make use of status registers. Because a POSITA would also recognize that an implementation of Grundy would not ***need*** to make use of status registers, when Petitioner turns to Kilbuck "[t]o the extent that it is argued that

MOSAID Technologies Inc., Exhibit 2026
Page 2026 - 23
IPR2025-01487, Infineon Technologies Americas Corp. v. MOSAID Technologies Inc.

and receiving Grundy's "status request" could be performed without the use of any registers.

48. None of Petitioner's citations to Grundy support Petitioner's implicit contention that Grundy's memory devices must use status registers. Grundy describes memory devices 155 that "monitor commands that propagate through the memory chain to determine if the commands require responsive action (*e.g.*, data read, write and erase actions, parameter query response, status response, etc.)." Ex. 1005 [Grundy] [0032]. Grundy's commands "may include data read and write commands, erase commands, parameter query commands, [and] status requests." *Id.*, [0033]. When a memory device must return information to the controller, however, Grundy does not describe storing that information in a status register, and status registers would not be necessary to implement Grundy's status requests or status responses.

49. Recognizing that Grundy itself contains no express status register, Petitioner turns to Kilbuck, pointing to Kilbuck's disclosure that "a special purpose 'ready/busy' external connection pin or internal status register/flag of the NAND architecture Flash memory device 100 may be monitored to indicate the status of the

---

Grundy does not teach or suggest this limitation," Pet., 41, Petitioner thus does not explain why a POSITA would look to Kilbuck's status registers to implement a functionality that is also implementable without status registers, and a functionality that may already exist (without the use of status registers) in an unmodified implementation of Grundy.

MOSAID Technologies Inc., Exhibit 2026
Page 2026 - 24
IPR2025-01487, Infineon Technologies Americas Corp. v. MOSAID Technologies Inc.

memory." Pet. 41 (citing Ex. 1006 [Kilbuck] [0033]). Kilbuck explains that this ready/busy pin or internal status register/flag "allows the memory device 100 to signal that it is busy with a read or write access (due to read or write latency, etc.), and causes the host 102 to wait, halting data transfers when active or set." Ex. 1006 [Kilbuck] [0033]; *see also, e.g., id*., cl. 8 (reciting "The non-volatile memory device of claim 6, wherein the non-volatile memory device is adapted to indicate when the non-volatile memory device is busy by changing the status of one of an external 'ready/busy' pin and a status register"). Petitioner asserts that "it further would have been obvious to include in Grundy's memory device a status register as taught in Kilbuck" to provide status information. Pet. 41–42.

50. I do not agree. Kilbuck's "internal status register/flag" appears in the context of a specific NAND-flash subsystem that presents a "synchronous memory device" interface which has a "slow …Flash array 112." Ex. 1006 [Kilbuck] [0032]. In order to present a synchronous interface while managing the slow flash-array accesses through an internal buffer and controller, Kilbuck must resort to providing a status register to signal that the device is "busy with a read or write access (due to read or write latency, etc.)." *Id.*, [0032]-[0033].

51. Grundy, by contrast, expressly states that there is "no circuitry for controlling response latency or burst length … or for arbitrating access to the output signal path need be provided within the individual memory devices." Ex. 1005

MOSAID Technologies Inc., Exhibit 2026
Page 2026 - 25
IPR2025-01487, Infineon Technologies Americas Corp. v. MOSAID Technologies Inc.

[Grundy] [0033]. In other words, Grundy has a mechanism in which its memory devices do not require any dedicated per-device status register.

52. Petitioner does not acknowledge Grundy's preexisting mechanism and the key difference between Grundy and Kilbuck. Petitioner additionally never identifies where, in its undefined "Grundy–Kilbuck" memory device, Kilbuck's status register would reside, how and when it would be read or written, how (or even why) it would interact with Grundy's design, or what commands would access it. Nor does Petitioner explain why a POSITA, starting from Grundy's memory, would modify that design by embedding a ready/busy status register into Grundy's design. Instead, Petitioner simply declares that it "would have been obvious to include in Grundy's memory device a status register as taught in Kilbuck" and points to the general proposition that "registers were well known and commonly implemented." Pet. 41–42. As I have stated above, it is certainly true that registers are well known and commonly implemented features of systems of all sorts. But I do not agree with Petitioner's implicit contention—that the mere fact that "registers were well known and commonly implemented" shows that it would have been obvious to a POSITA to modify Grundy's system by including them.

53. The proposed use of Kilbuck's ready/busy status register in Grundy is also contrary to Grundy's stated design goals. Grundy emphasizes that its scheme "simplif[ies] the interface control circuitry within the individual memory devices",

and avoids "circuitry for controlling response latency or burst length . . . or for arbitrating access to the output signal path . . . within the . . . memory devices." Ex. 1005 [Grundy] [0033]. Grundy further notes "the absence of address strobe signals and other memory device-specific signals issued by traditional memory controllers" in its design and explains that this "simplifies the design and operation of the memory controller and enables the memory controller to work with numerous different types of memory devices," including volatile and non-volatile storage arrays and even magnetic and optical media. *Id*., [0035], [0069]. Based on this disclosure of Grundy, a POSITA would recognize that using a status register in the Grundy memory device —as Petitioner effectively proposes—is precisely what the simplicity of Grundy's architecture is designed to avoid.

VII. CONCLUSION

54. At this stage of the proceedings, my opinions are preliminary and limited to the issues on which I have been asked to form an opinion on. In particular, because I understand that the decision to institute IPR is based on an assessment of the likelihood that at least one challenged claim is unpatentable, I have focused my analysis to date on issues that are common to all claims in the '381 patent, and my preliminary opinions have not considered issues that might be specific to individual challenged claims. I may further develop the opinions expressed here or offer additional opinions after a decision to institute, should the Board decide to do so.

MOSAID Technologies Inc., Exhibit 2026
Page 2026 - 27
IPR2025-01487, Infineon Technologies Americas Corp. v. MOSAID Technologies Inc.

55. Although my complete opinions are set forth above, for convenience I summarize the main point of my opinions in conclusion. For the foregoing reasons, based on my expertise and experience and the record of this case that I have reviewed, it is my opinion that claims 1–21 of the ’381 patent are not obvious over Grundy in view of Kilbuck as described in Petitioner’s Ground 1.

MOSAID Technologies Inc., Exhibit 2026
Page 2026 - 28
IPR2025-01487, Infineon Technologies Americas Corp. v. MOSAID Technologies Inc.

57. In signing this declaration, I recognize that the declaration will be filed as evidence in a contested case before the Patent Trial and Appeal Board of the United States Patent and Trademark Office. I also recognize that I may be subject to cross-examination in the case and that cross-examination will take place within the United States. If cross-examination is required, I will appear for cross-examination within the United States during the time allotted.

58. I hereby declare that all statements made herein of my own knowledge are true and all statements made herein on information and belief were and are believed by me to be true, and that all statements herein were and are made with the knowledge that willful false statements and the like so made are punishable by fine or imprisonment, or both, under section 1001 of Title 18 of the United States Code and that any such willful false statements may jeopardize the validity of the application or any patents issued thereon.

Respectfully submitted,

Dated: December 9, 2025

Sunil P. Khatri, Ph.D.

MOSAID Technologies Inc., Exhibit 2026
Page 2026 - 29
IPR2025-01487, Infineon Technologies Americas Corp. v. MOSAID Technologies Inc.

EXHIBIT A

Sunil P Khatri

Professor
Department of ECE, MS 3218,
Texas A&M University,
College Station, TX 77843
sunilkhatri@tamu.edu
Phone: (979) 845-8371
Fax: (979) 845-2630
http://www.ece.tamu.edu/~sunilkhatri/

Background and Summary

My research areas are:

- **Computer Systems:** My work on Computer Systems is divided in two subcategories: 1) ***circuits and computer architecture*** (including the design of machine learning engines, hardware security paradigms, efficient Networks-on-Chip (NoCs), special function units for comparison, hashing, Boolean Satisfiability and sorting, low energy, low power circuit and high-speed design, system prototyping, as well as circuit/architectural approaches for radiation tolerance/detection, resilience, crosstalk avoidance, clocking, leakage/power reduction and testability); and 2) ***algorithm acceleration*** (using GPUs, FPGAs, map-reduce clusters and custom ICs) for algorithms in the VLSI CAD domain.
- **Logic Synthesis and algorithms for VLSI Design:** In this area, my work initially started in the space of logic synthesis for VLSI CAD. In the last few years, I have directed this work toward genomics, noise based logics, and Boolean Satisfiability solvers (using GPUs, FPGAs, map-reduce clusters and custom IC based accelerators).
- **Interdisciplinary extensions:** The above two areas form a springboard from which I engage in research in other domains. I explore extensions of the above two areas to other areas such as IP routing, Digital Signal Processing (for FFT and radar signal processing), optical networking, wireless communication and coding, cryptography, satellite tracking, drone routing, graph network analytics and gene sequencing. Recent work in this space includes secure computing and distributed consensus (blockchain) techniques and their application.

I have a total of 291 peer-reviewed publications (48 journal papers, 201 conference papers, 42 workshop papers). Among these papers, 5 received a best paper award, while 7 others received best paper nominations (including 1 journal best paper nomination). An additional 3 journal papers and 1 conference papers are currently undergoing peer review. I have co-authored 9 research monographs (contracts for 5 others are being pursued) and 1 edited research monograph, 4 book chapters and 7 awarded US Patents (two of which were filed at Texas A&M). I have co-authored 1 invited journal paper, 13 invited conference or workshop papers (including 1 from DAC and 1 from Allerton) and 3 invited book chapters. Moreover, I was invited to serve as a panelist at a conference 8 times, and have presented 4 conference tutorials. I received the *"Outstanding Professor Award"* in the ECE Department at Texas A&M University in 2007, and again in 2020. My H-index is 36 (per Google Scholar).

I have graduated 13 Ph.D. students (3 co-advised, 5 US citizens or residents, and two women), 20 M.S. students (6 US citizens, 3 women, 3 of my MS students joined my Ph.D. program) and 12 B.S. Honors students and 6 B.S. Senior Design students, whose thesis I have advised. Currently, I advise 5 Ph.D. students (1 co-advised), 1 M.S. student, and 1 B.S. Senior Design students. I have advised 40 undergraduates (18 under the NSF REU, URA or USRG programs), of which 4 students received an award for their research. Eight papers in international conferences (1 invited) resulted from my work with undergraduates. The Ph.D. thesis of one of my students was nominated for the ACM Best Dissertation Award, 2014.

Last update: March 18, 2025

I have taught 5 distinct graduate courses and 3 distinct undergraduate courses at Texas A&M, have substantially redesigned the laboratories for one undergraduate course, and have assisted in the overhaul (lectures and laboratories) of another undergraduate course. My average undergraduate (graduate) teaching ratings are 4.42/5 (4.46/5). The departmental averages for similar courses are 4.15 (undergraduate) and 4.45 (graduate). For undergraduate courses, my average numerical grade is 2.81, while the departmental average for equivalent level courses is 3.18. For graduate courses, these numbers are 3.73 and 3.65 respectively. In Fall 2009, I was awarded the "*Association of Former Students' Distinguished Achievement Award in Teaching*", and the "*Association of Former Students Distinguished Achievement Award in Teaching - College-Level*" in 2019. In 2024, I received the "Engineering Teaching Excellence Award" from the College of Engineering, Texas A&M University.

I have 1 current research grant (total grant amount $1431K, of which my portion is about $674K). The total amount of the grants in which I was involved to date is $18.96M, of which my portion is $3.524M. Some of these grants are with colleagues in ECE as well as other academic departments at TAMU. My research has been funded through government (NSF, LLNL, NSA, DNDO, DTRA, DoE) as well as industrial (Intel, Nascentric, NSC, SRC, Accelicon, Iris Technologies) sources.

I currently serve, or have served, as the *Associate Editor* (ACM Transactions on Design Automation of Electronic Systems, IEEE Transactions on Computers, MDPI Journal of Electronics), *EDA Track Co-Chair* for ICECS 2014, *Panel Chair* for TexasWISE 2014, *Track Co-Chair* (VLSI Systems, Applications and Computer Aided Design track) for ICECS 2013, *Poster Session Chair* for TexasWISE 2013, *Advisory Committee* for HotPI 2013, Panel Session Chair *for SLiP 2013, Track Chair* (Logic track) for ICCAD 2009-10, 2015-17, *Track Chair* (logic track) for DAC 2016-17, *General Chair* for IWLS 2009, *Technical Program Chair* for IWLS 2008, *Track Co-Chair*, Computer Aided Network DEsign (CANDE) Track for ISCAS 2008-10 and DSP Track for ISCAS 2022, *Track Co-Chair*, Test and Methodologies Track, for ICCD 2007, *Panel Chair* for ITSW 2009, *Publicity Co-Chair* for GLS-VLSI 2009, and as a *member of the TPC* for several conferences. I have conducted *reviews* of a large number of IEEE and ACM journal and conference papers. I have also served as a *session chair* at several conferences. In addition, I have been involved in Department and group level service activities.

Education

Ph.D. **University of California, Berkeley.** Department of Electrical Engineering and Computer Sciences. (1993 - 99). Awarded the California MICRO Fellowship, 1993-94. Maintained a GPA of 3.963.

M. S. **University of Texas, Austin.** Department of Electrical and Computer Engineering (1987 - 89). Awarded the Microelectronics and Computer Development (MCD) Fellowship, 1987-89). Maintained a GPA of 3.909.

B. S. **Indian Institute of Technology, Kanpur, India.** Department of Electrical Engineering (1983 - 87). Obtained a GPA of 3.72, ranked fourth in a class of sixty students.

Dissertation/Thesis

Ph. D. ***"Cross-talk Noise Immune VLSI Design using Regular Layout Fabrics".*** Committee: Professor R. K. Brayton (Co-chair), A. Sangiovanni-Vincentelli (Co-chair) and Professor Dorit Hochbaum, University of California, Berkeley.

MOSAID Technologies Inc., Exhibit 2026
Page 2026 - 32
IPR2025-01487, Infineon Technologies Americas Corp. v. MOSAID Technologies Inc.

M. S. ***"The Design of the METRIC Memory Interface and Memory System".*** This involved the design of the memory interface of METRIC, a multi-threaded RISC Microprocessor. Committee: Professor M. Ray Mercer (chair) and Professor Donald Fussell, University of Texas at Austin.

B. S. Senior project involved implementing graphics algorithms on a MC68000-based terminal. Advisor: Professor A Joshi, Indian Institute of Technology, Kanpur, India.

Research and Professional Experience

Faculty Development Leave at National Center for Atmospheric Research (NCAR) and the Air Force Research Laboratory (AFRL), 8/2025 – 8/2026. I plan to spend my sabbatical at NCAR, working with Dr. Jothiram Vivekanandan on several topics related to phased-array radar signal processing, including design and testing (including field test) of the signal processing elements. My work at AFRL will focus on secure hardware.

Faculty Development Leave at Arizona State University (ASU) and the Air Force Research Laboratory (AFRL), 8/2019 – 8/2020. I spent my sabbatical at ASU, working with Prof. Sarma Vrudhula on several topics related to flash-based realization of ASICs, neural networks, and secure hardware. My work at AFRL comprised research on secure hardware. Three papers and three NSF grant proposals and one patent resulted from this effort, and additional collaboration is being pursued.

Texas A&M University, College Station, TX. Professor in Electrical and Computer Engineering, 9/2015 – present. Associate Professor in Electrical and Computer Engineering, 9/2010 – 9/2015. Assistant Professor in Electrical and Computer Engineering, 6/2004 – 9/2010. Conducting research on 3 areas. The first is **Computer Systems,** including computer architecture from the circuits up, and algorithm acceleration using GPUs, FPGAs and custom ICs. The second is **Logic and its applications**, while the third area consists of **Interdisciplinary extension**s of the first two.

Faculty Development Leave at U.T. Austin, 9/2011 – 8/2012. I spent my sabbatical at UT Austin, working with Prof. Jacob Abraham on several topics such as genomics, sinusoidal signal based data transfer, and medical electronics. One paper resulted from this effort, and additional collaboration is being pursued.

University of Colorado, Boulder. Assistant Professor, Electrical and Computer Engineering. 1/2000 – 5/2004. Performed research on VLSI logic design automation, VLSI layout design automation, VLSI design methodologies to address Deep Submicron (DSM) issues such as cross-talk and power along with interdisciplinary extensions.

University of California, Berkeley. Research Assistant with the CAD group, under Professors Robert Brayton and A. Sangiovanni-Vincentelli (8/1993 – 12/1999). Research topics included CAD for DSM design, Sets of Pairs of Functions to be Distinguished (SPFDs), Binary Decision Diagrams, Engineering Change, Hierarchical Synthesis and Verification, Model Matching and Combinational Verification, Timing Analysis in the Presence of Cross-talk and Multi-valued Logic Synthesis.

Design Engineer with Motorola's MC88110 RISC and PowerPC 603 microprocessor groups in Austin, Texas (8/1989 – 7/1993). Was involved in various design areas from Design for Testability to Digital and Analog Circuit Design, along with high-level design.

MOSAID Technologies Inc., Exhibit 2026
Page 2026 - 33
IPR2025-01487, Infineon Technologies Americas Corp. v. MOSAID Technologies Inc.

Independently responsible for the design of the factory test controller for the MC88110. Familiar with various ad-hoc and structured test methodologies. Designed digital as well as analog circuitry. Designed the MC88110's input / output buffers and clock PLL logic. Performed all attendant tasks in a "vertical" VLSI design methodology, including high-level modeling, layout design and verification, as well as global and detailed routing.

During my years at Motorola, I had definite plans to pursue an academic career. As a result, I intentionally attempted to get an understanding of as many tasks as possible in an entire VLSI design flow, to make for a more rich research base in my future as an academic researcher.

University of Texas, Austin. Researcher with Professor M. Ray Mercer's group (8/1988 - 7/1993). Research topics included IC testing and Boolean function representation using Canonical XOR-based circuit decompositions.

University of Texas, Austin. Researcher with Professor Donald Fussell's group (8/1987 – 7/1989). Research areas included Computer Architecture and Memory Interface design, applied in the context of the METRIC multi-threaded RISC microprocessor, which Professor Fussell was developing.

Research Interests

My research interests are broadly divided into 3 areas listed below. Each area has representative topics listed alongside the heading.

- **Computer Systems:** My work in Computer Systems is divided into 2 categories: 1) ***VLSI circuits and computer architecture*** (including the design of machine learning systems, hardware security paradigms, efficient NoCs using a resonant clocking as well as a superposition-of-sinusoids paradigm, special function units for comparison, hashing, Boolean Satisfiability and sorting, low energy and low power design using sub-threshold circuits, high-speed circuit design, system prototyping, specialized architectures for radiation tolerance/detection, as well as circuit and architectural approaches for resilience, crosstalk avoidance, clocking, leakage reduction and testability). My group also develops system prototypes to validate our ideas – for example, in extreme low power/energy computation, architectures for cryptography and FPGA based architectures for Boolean Satisfiability, and 2) ***Algorithm acceleration*** (using GPUs, FPGAs, map-reduce clusters and custom ICs), for algorithms in the VLSI CAD (for fault simulation, logic simulation, circuit simulation, fault table generation, SAT) domain.
- **Logic Synthesis and Algorithms for VLSI Design:** In this area, my work initially started in the space of logic synthesis for VLSI CAD. In the last few years, I have directed this work toward genomics (predictor inference, Gene Regulatory Network (GRN) construction, determining optimal drug regime for a genetic disease, gene sequencing and alignment), noise based logics and their realization, and fast Boolean Satisfiability solvers (using GPUs, FPGAs, map-reduce clusters and custom IC based accelerators).
- **Interdisciplinary extensions:** The above two areas form a spring-board from which I engage in research in other domains. I explore extensions of the above two areas to other areas such as IP routing (routing table compression, architecture and circuit design of Ternary CAMs), Digital Signal Processing (architectures and designs for FFT, FPGA and GPU based radar signal processors), optical networking (SAT based Routing and Wavelength Assignment for DWDM optical networks), wireless communication (MIMO decoders, WiMAX decoders) and coding (LDPC decoders, fix-free code generators), satellite tracking, drone routing, graph network analytics and cryptography. Recent work spanning this area involves secure computing, and distributed consensus (blockchain) and its applications

MOSAID Technologies Inc., Exhibit 2026
Page 2026 - 34
IPR2025-01487, Infineon Technologies Americas Corp. v. MOSAID Technologies Inc.

Some of my current research projects (which are yet unpublished) include an interdisciplinary project (with Dr. Suman Chakravorty (Aerospace, TAMU)) in which we are accelerating a receding horizon control method to track satellites, a method to help IC debug by sampling the power supply grid on the fly, a combined hardware and software programming language, a fast map-reduce based implementation of a Boolean Satisfiability (SAT) solver, an asynchronous, low leakage power Network-on-Chip router, several methods to accelerate gene sequencing and alignment, a method to detect coincident events in radiation detection when multiple detectors are deployed (this will be fabricated in a near-threshold IC in the next year), a fast superposition-of-sinusoids approach to deliver very high speed data across ICs on a circuit board, and a new highly efficient circuit design approach that uses flash transistors (which have historically been used only for memory).

Publications

Conventions used:

- For all publications, the names of past or present, graduate or undergraduate student co-authors (who were advised by me or had no advisor at the time of publication) are underlined. The students with no advisor at the time of publication were students who took my graduate course, and we decided to publish their class project.
- The names of past or present co-authors who were graduate students at the time of publication (and were not advised by me) are indicated in *underlined italics*. Such students are the students of colleagues with whom I collaborated after becoming a faculty member, or peer students with whom I collaborated while I was a graduate student.
- All publications listed (other than invited papers) are peer reviewed.
- I have first listed books/book chapters, followed by conference tutorials presented, invited papers or panels, journal papers, conference papers, workshop papers and patents. Accepted items and items which are under review are listed under separate headings.
- Items under review are not included in the paper count totals.
- Invited papers are listed under "Conference Papers" and "Workshop Papers", and also under a separate heading for distinguishability.
- In a handful of cases, page numbers are not available.

Books or Book Chapters Published:

"Flash - A "Forgotten" Technology in VLSI Design". Khatri, Vrudhula, Abusultan, Bharathi, Chu, Lee, Scott, Singh, Wagle. Appears "Frontiers of Quality Electronic Design (QED)". Springer publishers, Sept 2022. Pages 67-136. Ali Iranmanesh, Ed. ISBN: 978-3-031-16344-9.

"A Sum-Of-Product Based Multiplication Approach For FIR Filters And DFT", Kumar, Khatri. Monograph published by LAP LAMBERT Academic Publishing. 1st edition, January 2014. 64p. ISBN 978-3-8484-8636-6.

"Source-Synchronous Networks-On-Chip: Circuit and Architectural Interconnect Modeling", Mandal, Khatri, Mahapatra. Monograph published by Springer Publishers. 1st edition November 2013. 160p. ISBN 978-1-4614-9404-1.

"Logic Synthesis for Genetic Diseases: Modeling Disease Behavior Using Boolean Networks", Lin, Khatri. Monograph published by Springer Publishers. 1st edition, November 2013. 140p. ISBN 978-1-4614-9428-7.

MOSAID Technologies Inc., Exhibit 2026
Page 2026 - 35
IPR2025-01487, Infineon Technologies Americas Corp. v. MOSAID Technologies Inc.

"Practical & Real Time IP Routing Table Compression - Extending algorithms from digital logic synthesis". Bollapalli, Khatri. Published by LAP Lambert Academic Publishing, January 2012. 68p. ISBN 978-3847321521.

"*Advanced Techniques in Logic Synthesis, Optimizations and Applications*", Khatri, Gulati, editors. Springer Publishers, 1st ed, 2011. 240p. ISBN 978-1-4419-7517-1.

"*Robust Window-Based Multi-node Minimization Technique Using Boolean Relations*", Cobb, Gulati, Khatri. pp 309-333, In "*Advanced Techniques in Logic Synthesis Optimizations and Applications*", Khatri, Gulati, ed. Springer Publishers.

"*Digital Logic Using Non-DC Signals*" Bollapalli, Khatri, Kish. pp 383-400. In "*Advanced Techniques in Logic Synthesis Optimizations and Applications*", Khatri, Gulati, ed. Springer Publishers 2011. ISBN 978-1-4419-7517-1.

"On and Off-chip Cross-talk Avoidance in VLSI Designs", Duan, LaMeres, Khatri. Monograph published by Springer Publishers. 1st edition, 2010. 240p. ISBN 978-1-4419-0946-6.

"EDA Algorithm Acceleration with FPGAs, GPUs, and Custom ICs", Gulati, Khatri. Monograph published by Springer Publishers. 1st edition, 2010. 194p. ISBN 978-1-4419-0943-5.

"Analysis and Design of Resilient VLSI Circuits: Mitigating Soft Errors and Process Variations", Garg, Khatri. Monograph published by Springer Publishers. 1st edition, 2010. 212p. ISBN 978-1-4419-0930-5.

"Minimizing and Exploiting Leakage in VLSI Design", Jayakumar, Paul, Garg, Khatri. Monograph published by Springer Publishers. 1st edition, 2010. 214p. ISBN 978-1-4419-0949-7.

Invited chapter "*Logic Synthesis*" in the CRC EDA handbook "EDA for IC Implementation, Circuit Design and Process Technology". Editors L. Lavagno, L. Scheffer, G. Martin. ISBN 0849379245, 9780849379246, 571pp, published 2006. Chapter co-authored by Narendra Shenoy of Synopsys Inc. The Wikipedia entry on "Logic Synthesis" is based on the material in this chapter.

"Cross-talk Noise Immune VLSI Design using Regular Layout Fabrics", Khatri, Brayton, Sangiovanni-Vincentelli. Research Monograph published by Kluwer Academic Publishers. ISBN # 0-7923-7407-X.

Book Contracts or Chapter Invitations:

"*A Flash-based Digital to Analog Converter Design",* Scott, Khatri. Contract for this research manuscript being pursued through Springer publishers, 2025-26

"*GPU based acceleration of Reinforcement Learning Approaches",* Zhou, Khatri, Hu, Liu. Contract for this research manuscript being pursued through Springer publishers, 2025-26

"*Synchronous, Scalable Ring-based Design of 3D Stacked DRAM",* Douglass, Khatri, Linderman. Contract for this research manuscript being pursued through Springer publishers, 2025-26

"Metastability Reduction on Asynchronous Circuits", Sharma. Khatri. Contract for this research manuscript being pursued through LAP LAMBERT publishers, 2025-26

"Digital Circuit Design using Flash Transistors", Abusultan, Khatri. Contract for this research monograph being pursued through Springer Publishers, 2025-26

MOSAID Technologies Inc., Exhibit 2026
Page 2026 - 36
IPR2025-01487, Infineon Technologies Americas Corp. v. MOSAID Technologies Inc.

Conference Tutorials Presented:

"Flash – An Overlooked Technology in VLSI Design", Khatri, Vrudhula. Monday Tutorial presented at the 62nd ACM/CEDA Design Automation Conference (DAC), San Francisco, CA, June 22-25, 2024.

"Distributed Consensus and the Smart Grid". Khatri. 3rd IEEE International Conference on Smart Grid and Renewable Energy, Mar 20-22, 2022. Doha, Qatar.

"*Introduction to GPU Programming for EDA*", Croix, Khatri. This tutorial was presented at the International Conference on Computer-Aided Design (ICCAD), San Jose, CA. November 2-5, 2009.

"Structured ASIC Design Approaches and Trends", Technical Forum, DesignCon East, Worcester, MA. September 19-21, 2005.

Conference Panel Invitations:

"Overview of Smart Grids and Their Cyber-physical Security". Invited to serve as a panelist at the 50th annual conference of the IEEE Industrial Electronics Society (IECON), Chicago, IL. Nov 3-6, 2024.

"Challenges and Opportunities of Stochastic Computing in the Dusk of Moore's Law and the Dawn of Big Data", Invited to serve on a panel at the IEEE/ACM International Conference on Computer-Aided Design (ICCAD), Nov 7-10, 2016, Austin, TX. Declined due to health reasons.

"*Looking Beyond Moore's Law*", Invited to serve on a panel at the IEEE Texas Workshop on Integrated System Integration (TexasWISE) 2016, Houston, TX.

"Models and High-Speed Simulation". Invited to Chair a Panel Session to discuss this topic, at the 15th ACM/IEEE System Level Interconnect Prediction (SLIP) Workshop 2013, Austin, TX. June 2, 2013.

"Multi-core and GPU based Parallelism". Invited to serve as a panelist to discuss this topic, along with leading academic and industry practitioners in this area. The panel was part of the IEEE CTS CAS/SSC/CEDA Workshop on Data Parallelism for Multi-core Chips and GPUs", Austin, TX. October 5, 2012. My talk was titled *"Algorithm Acceleration for GPU Architectures".*

"Manycore, Heterogenous, or Neither: Which One is the Way to Go for EDA?". Invited to serve as a panelist to discuss this topic, along with other leading researchers in the field of GPU based implementation of EDA algorithms. The panel was part of the IEEE/ACM International Conference on Computer-Aided Design (ICCAD), San Jose, CA. November 7-10, 2011.

"*The Top of Testing's Most Wanted List – What is the most critical Testing challenge? (or have all the bad guys been caught already?)*", invited panelist (along with Jason Doege, T.M. Mak, Rob Dassch, Tom Williams and Luis Basto, some leading researchers in VLSI testing). This panel was part of the International Test Synthesis Workshop (ITSW) 2007, San Antonio, TX. March 5-7, 2007.

"*Are we Fighting a Losing Battle, Dealing with Numerous and Complex Defects?*", invited to serve as a panelist along with 3 leaders in the field. Peer panelists were Dr. Tom Williams (Synopsys), Prof. Melvin Bruer (USC), and Al Crouch (Inovys Corporation). The panel was part of the International Test Synthesis Workshop (ITSW) 2006, Santa Barbara, CA. April 9-12, 2006.

MOSAID Technologies Inc., Exhibit 2026
Page 2026 - 37
IPR2025-01487, Infineon Technologies Americas Corp. v. MOSAID Technologies Inc.

Invited Papers, Book Chapters and Talks:
***Note:* These papers are re-listed along with regular papers in a later section. They are separately listed here for ease of perusal.**

Invited chapter *"A GPU-based Implementation of a Receding Horizon Sensor Tracking Methodology",* Abusultan, Chakravorty, Khatri. Invited to publish as a chapter in the Elsevier book "Advances in GPU Research and Practice", H. Sarbazi-Azad (Editor).

Invited chapter *"GPU-based Algorithms in Electronic Design Automation",* Gulati, Khatri, Croix. Invited to publish as a chapter in the Elsevier book "Advances in GPU Research and Practice", H. Sarbazi-Azad (Editor).

Invited paper, *"Information, noise and energy dissipation: Laws, limits and applications*", Kish, Granqvist, Khatri, Sundqvist, Peper Plenary talk at International Workshop on Molecular Architectonics, Shiretoko, Hokkaido, Japan, August 3-6, 2015.

Invited paper *""Demonic" challenge: Landauer's erasure-dissipation"* Kish, Granqvist, Khatri. 44th Winter Colloquium on the Physics of Quantum Electronics (PQE) 2014, Snowbird, UT. January 5-9, 2014.

Invited paper *"Demons: Maxwell demon; Szilard engine; and Landauer's erasure-dissipation"*, Kish, Granqvist, Khatri, Wen. Hot Topic of Physical Informatics (HoTPI) 2013, November 10-13, Changsha, China. November 10-13, 2013.

Invited paper, "*Using GPUs to Accelerate CAD Algorithms*", Croix, Gulati, Khatri. IEEE Design & Test, Vol. 30, Issue 1. February 2013, pp 8-16.

Invited paper, "*Algorithm Acceleration for GPU Architectures*", IEEE CTS CAS/SSC/CEDA Workshop on Data Parallelism for Multi-Core Chips and GPUs, Austin, TX. October 5, 2012.

Invited paper, "*Application of logic synthesis to the understanding and cure of genetic diseases*", Lin, Khatri. IEEE/ACM Design Automation Conference (DAC) 2012, San Francisco, CA. June 3-7, 2012, pp 734-740.

Invited paper, "*Noise-based Information Processing*", Kish, Khatri, Bezrukov, Peper, Gingl, Horváth. 21st International Conference on Noise and Fluctuations. June 12-16 2011, Toronto, Canada. June 12-16, 2011, pp 28-33.

Invited paper *"DFM-Aware Structured ASIC Design"*, Gopalani, Garg, Khatri. International Symposium on Integrated Circuits (ISIC) 2009, Singapore. December 14-16, 2009, pp 29-32.

Invited paper *"A PTL based Highly Testable Structured ASIC Design Approach"*, Gulati, Jayakumar, Khatri. International Symposium on Integrated Circuits (ISIC) 2009, Singapore. December 14-16, 2009, pp 33-36.

Invited paper "*Highly Parallel Decoding of Space-Time Codes on Graphics Processing Units",* Bollapalli, *Wu*, Gulati, Khatri, Calderbank. Annual Allerton Conference on Communication, Control and Computing, 2009, Urbana, IL. September 30 – October 2, 2009, pp 1262-1269.

Invited paper "*Noise-based logic",* Kish, Khatri, Bezrukov, Gingl, *Sethuraman*. International Workshop on Natural Computing (IWNC) 2009, Himeji, Japan. September 23-25, 2009. Published by Springer, Eds. F. Peper et al., IWNC 2009, PICT 2, pp 13–22, 2010.

MOSAID Technologies Inc., Exhibit 2026
Page 2026 - 38
IPR2025-01487, Infineon Technologies Americas Corp. v. MOSAID Technologies Inc.

Invited paper "*Extreme Low Power Computing using Sub-threshold Circuits",* Segundo Magno Congreso Interancional del CIC 2007, Mexico City, Mexico. November 6-8, 2007.

Invited chapter "*Logic Synthesis*" in the CRC EDA handbook "EDA for IC Implementation, Circuit Design and Process Technology". Editors L. Lavagno, L. Scheffer, G. Martin. ISBN 0849379245, 9780849379246, 571pp, published 2006. Chapter co-authored by Narendra Shenoy of Synopsys Inc. The Wikipedia entry on "Logic Synthesis" is based on the material in this chapter.

Invited paper *"A Routing Technique for Structured Designs which Exploits Regularity*". Khatri, Das. VLSI Design and Test Workshop (VDAT-2001), August 2001.

Invited paper *"Multi-valued Logic Synthesis"*- Brayton, Khatri. 12th International Conference on VLSI Design (VLSI-99), Goa, India. 1999, pp 196-205.

Peer-reviewed Journal Publications:

"Attention-Enhanced AGRU Framework for Induction Motor Incipient Fault Diagnosis in Electric Vehicles". Saleh, Ghrayeb, Refaat, Abu-Rub, Khatri, Kammermann. IEEE Transactions on Instrumentation and Measurement, Vol. 74, November 2024, pp 1-17. Appeared in January 2025.

"*A Mixed-Signal Quantized Neural Network Accelerator Using Flash Transistors*", Scott, Lee, Khatri, Vrudhula. IEEE Transactions on Circuits and Systems I: Regular Papers, vol. 71, no. 3, pp. 1025-1038, March 2024.

"*An ASIC Accelerator for QNN With Variable Precision and Tunable Energy-Efficiency*", Wagle, Singh, Khatri Vrudhula. IEEE Transactions on Computer-Aided Design of Integrated Circuits and Systems, vol. 43, no. 7, pp 2057-2070, Jan 2024.

"*A Digital Low Dropout (LDO) Voltage Regulator Using Pseudoflash Transistors*", Lee, Khatri. IEEE Transactions on Very Large Scale Integration (VLSI) Systems, vol. 31, no. 12, pp. 1960-1969, Dec. 2023.

"A Novel ASIC Design Flow using Weight-tunable Binary Neurons as Standard Cells", Wagle, Singh, Khatri, Vrudhula. IEEE Transactions on Circuits and Systems I (Regular Papers), 69(7): 2968-2981 (Sept 2022).

"CIDAN-XE: Computing in DRAM with Artificial Neurons", Singh, Wagle, Khatri, Vrudhula. Frontiers in Electronics, section Integrated Circuits and VLSI. vol. 3, Feb 2022

"Hardware Acceleration of Hash Operations in Modern Microprocessors", Fairouz, Abusultan, Fedorov, Khatri. IEEE Transactions on Computers 70(9): 1412-1426 (Sept 2021).

"Computational evaluation of a novel Beta radiation probe design using integrated circuits", King, Shah, Marianno, Khatri, Chirayath. SN Applied Sciences 3(3), 386, Mar 2021. Springer Nature.

"Fast, Ring-based Design of 3D Stacked DRAM", Douglass, Khatri. IEEE Transactions on Very Large Scale Integration (VLSI) Systems. Vol 27 number 8, Aug 2019. pp 1731-1741.

"*Comparing Leakage Reduction Techniques for an Asynchronous NoC Router*" Fairouz, Abusultan, Elshennawy, Khatri. Journal of Low Power Electronics (JOLPE). Vol. 14, No. 3, pp 414-427. 2018.

"*A GPU-CPU heterogeneous algorithm for NGS read alignment*", Al Kawam, Khatri, Datta. International Journal of Computational Biology and Drug Design, Vol 11, No 1-2, pp 52-66, 2018.

MOSAID Technologies Inc., Exhibit 2026
Page 2026 - 39
IPR2025-01487, Infineon Technologies Americas Corp. v. MOSAID Technologies Inc.

"A Neutron Detector Using Integrated Circuits", Shah, Marianno, Khatri, Fisher. Journal of Modern and Applied Physics, 1(1):3-7, December 2017.

"*A Survey of Software and Hardware Approaches to Performing Read Alignment in Next Generation Sequencing*", Al-Kawam, Khatri, Datta. IEEE/ACM Transactions on Computational Biology and Bioinformatics, vol 14(6), pp 1202-1213, Nov-Dec 2017.

"*FTCAM: An Area-Efficient Flash-Based Ternary CAM Design*", *Fedorov*, Abusultan, Khatri. IEEE Transactions on Computers. Vol 65, issue 8, pp 2652-2658, Aug 2016.

"*Response to "Comment on 'Zero and negative energy dissipation at information-theoretic erasure'"*, Kish, Granqvist, Khatri, Peper. Accepted for publication in Journal of Computational Electronics. Vol 15, Issue 1, pp 343-346. Mar 2016.

"*Zero and negative energy dissipation at information theoretic erasure*", Kish, Granqvist, Khatri, Peper. Journal of Computational Electronics, 15(1), pp 335-339, Mar 2016.

"*Demons: Maxwell's Demon, Szilard's Engine and Landauer's Erasure-dissipation*", Kish, Granqvist, Khatri, Wen. International Journal of Modern Physics: Conference Series 33 (2014) 1460364-1 to 1460364-5.

"Simulation Analysis of Scintillation in a NaI Detector", Shah, Marianno, Khatri, Boyle. Journal of the Institute of Nuclear Materials Management (JNMM), Vol. 43, No. 1, Bonus content, 2014.

"List Mode with the ORTEC digiBASE-E", *Hearn*, Marianno, Khatri, *Gypp.* In Health Physics: The Radiation Safety Journal, Vol. 106, Issue 2, February 2014, pp S12-S15**.**

Invited paper, "*Using GPUs to Accelerate CAD Algorithms*", Croix, Gulati, Khatri. IEEE Design & Test, Vol. 30, Issue 1. February 2013, pp 8-16.

"On Optimal and Achievable Fix-Free Codes", Savari, *Yazdi*, *Abedini*, Khatri. IEEE Transactions on Information Theory 58(8): 5112-5129, 2012.

"Application of Max-SAT-based ATPG to optimal cancer therapy design", Lin, Khatri. BMC Genomics 2012, 13 (Suppl 6):S5, 26 October, 2012.

"A DCVSL Delay Cell for Fast Low Power Frequency Synthesis Applications", Turker, Khatri, Sanchez-Sinencio. IEEE Transactions On Circuits and Systems – I, Vol. 58, No. 6, June 2011, pp 1225-1238.

"*Computation using Noise-based Logic: Efficient String Verification over a Slow Communication Channel*", Kish, Khatri, Horvath. European Journal of Physics B 79, January 2011, pp 85-90.

"*Noise-based deterministic logic and computing: a brief survey*", Kish, Khatri, Bezrukov, Peper, Gingl, Horvath. International Journal of Unconventional Computing 7, February 2011, pp 101-113.

"*A Simultaneous Input Vector Control and Circuit Modification Technique to Reduce Leakage with Zero Delay Penalty*", Jayakumar, Khatri. ACM Transactions on Design Automation of Electronic Systems, 2010.

"*Towards brain-inspired computing*", Gingl, Khatri, Kish. Fluctuation and Noise Letters 9, December 2010, pp 403–412.

MOSAID Technologies Inc., Exhibit 2026
Page 2026 - 40
IPR2025-01487, Infineon Technologies Americas Corp. v. MOSAID Technologies Inc.

"*Instantaneous noise-based logic*", Kish, Khatri, Peper. Fluctuation and Noise Letters 9, December 2010, pp 323–330.

"Fault Table Computation on GPUs", Gulati, Khatri. Journal of Electronic Testing: Theory and Applications (JETTA). Vol. 26, No. 2, April 2010, pp 195-209.

"*Selective Forward Body Bias for High Speed and Low Power SRAMs*", Bollapalli, Garg, Gulati, Khatri. Accepted for publication at the Journal of Low Power Electronics (JOLPE), Vol. 5, No. 2, August 2009.

"*Encoding Serial Graphical Data for Energy-Delay Product/Energy Minimization*", Ekambavanan, Garg, Khatri, Narayanan. Accepted for publication at the Journal of Low Power Electronics (JOLPE), Vol. 5, No. 2, August 2009, pp 157-172.

"Noise-based Logic Hyperspace with the Superposition of 2^N States in a Single Wire". Kish, Khatri, *Sethuraman*. Physics Letters A. Vol. 373, No. 22, May 2009, pp 1928-1934.

"Circuit-level Design Approaches for Radiation-hard Digital Electronics", Garg, Jayakumar, Khatri, Choi. IEEE Transactions on Very Large Scale Integration Systems, Vol. 17, No. 6, June 2009, pp 781-792.

"Efficient On-Chip Crosstalk Avoidance CODEC Design", Duan, Cordero, Khatri. IEEE Transactions on Very Large Scale Integration Systems, Vol. 17, No. 4, April 2009, pp 551-560.

"FPGA-Based Hardware Acceleration for Boolean Satisfiability", Gulati, Paul, Khatri, Patil, Jas. ACM Transactions on Design Automation of Electronic Systems (TODAES). Vol. 14, No. 2, March 2009. **Among the top 10 downloaded papers for the journal in 2010. Nominated for best paper for the journal, 2010.**

"A Fast Hardware Approach for Approximate, Efficient Logarithm and Antilogarithm Computations", Paul, Jayakumar, Khatri. IEEE Transactions on Very Large Scale Integration Systems, Vol. 17, No. 2, February 2009, pp 269-277.

"A *Dynamically De-skewable Clock Distribution Methodology*", Jayakumar, Kapoor, Khatri. IEEE Transactions on Very Large Scale Integration (TVLSI), Vol. 16, No. 9, September 2008, pp 1220-1229.

"*Resource Sharing among Mutually Exclusive Sum-of-Product Blocks for Area Reduction*", Das, Khatri. ACM Transactions on Design Automation of Electronic Systems (TODAES), Vol. 13, No. 3, July 2008, pp 51:1-51:7.

"*Efficient, Scalable Hardware Engine for Boolean Satisfiability and Unsatisfiable Core Extraction*", Gulati, *Waghmode*, Khatri, Shi. IET Computers and Digital Techniques, Vol. 2, No. 3, May 2008, pp 214-229.

"*A Probabilistic Method to Determine the Minimum Leakage Vector for Combinational Designs in the Presence of Random PVT Variations*", Gulati, Jayakumar, Khatri, Walker. Integration, the VLSI Journal, Vol. 41, No. 3, May 2008, pp 399-412.

"*SAT-based ATPG using Multi-level Compatible Don't-Cares*", Gulati, Saluja, Khatri. ACM Transactions on Design Automation of Electronic Systems (TODAES), Vol. 13, No. 2, April 2008, pp 24:1-24:18.

MOSAID Technologies Inc., Exhibit 2026
Page 2026 - 41
IPR2025-01487, Infineon Technologies Americas Corp. v. MOSAID Technologies Inc.

"*A Novel Hybrid Parallel-Prefix Adder Architecture with Efficient Timing-Area Characteristic*", Das, Khatri. IEEE Transactions on Very Large Scale Integration, Vol. 16, No. 3, March 2008, pp 326-331.

"*A Timing-Driven Approach to Synthesize Fast Barrel Shifters*", Das, Khatri. IEEE Transactions on Circuits and Systems II (TCAS-II), Vol. 55, No. 1, January 2008, pp 31-35.

"*Polymer Sensors to Monitor Roach Locomotion*", *Lee*, *Cooper*, *Mika*, *Clayton*, Garg, Gonzalez, Vinson, Khatri, Liang. IEEE Sensors Journal, Vol. 7, No. 12, December 2007, pp 1698-1702.

"*High-throughput VLSI Implementations of Iterative Decoders and Related Code Construction Problems*". *Nagarajan*, *Laendner*, Jayakumar, Milenkovic, Khatri. Springer Journal of VLSI Signal Processing, Vol. 49, No. 1, October 2007, pp 185-206.

"*A Predictably Low Leakage ASIC Design Style*", Jayakumar, Khatri. IEEE Transactions on Very Large Scale Integration, Vol. 15, No. 3, March 2007, pp 276-285.

"*SPFD-based Wire Removal in Standard-cell and Network-of-PLA Circuits*"- Khatri, *Sinha*, Brayton, Sangiovanni-Vincentelli. IEEE Transactions on Computer-Aided Design of Circuits and Systems, Vol. 23, No. 7, June 2004, pp 1020-1030.

"*An Efficient and Regular Routing Methodology for Datapath Designs Using Net Regularity Extraction*". Das, Khatri. Short paper, IEEE Transactions on CAD, Vol. 21, Number 1. Special issue on Physical Design, January 2002, pp 93-101.

Peer-reviewed Journal Submissions Under Review:

"*A Self-Adaptive Physics-Informed Gated Recurrent Unit Neural Networks Model for Estimating the Lifetime of Li-ion Batteries* ", Saleh, Alquennah, Ghrayeb, Refaat, Abu-Rub, Khatri. Submitted to IEEE Transactions on Transportation Electrification (Under Review).

"A Review on the Aging Mechanisms and Lifetime Estimation Methods of XLPE Power Cables ", Saleh, Alquennah, Ghrayeb, Refaat, Abu-Rub, Khatri. Submitted to IEEE Open Journal of Industrial Applications (Under Review)

"*CapsPDNet: Optimized Capsule Network for Predicting Insulator Discharges Using UHF Signals"*, Saleh, Darwish, Ghrayeb, Refaat, Abu-Rub, Khatri, El-Haj. Submitted to IEEE Transactions on Instrumentation and Measurement (Under Review)

Conference Publications (All listed papers are peer-reviewed, except for invited papers):

"A Novel Mixed-Signal Flash-based Finite Impulse Response (FFIR)", Lee, Khatri, Ghrayeb. Proc. of the 30th ACM Asia and South Pacific Design Automation Conference (ASPDAC) 2025. Tokyo, Japan, January 20-23, 2025. pp 1216-1222.

"Self-Adaptive Physics Informed Neural Network for Paper Insulation Degree of Polymerization Prediction", Alquennah, Saleh, Ghrayeb, Abu-Rub, Refaat, Khatri. 50th Annual Conference of the IEEE Industrial Electronics Society (IECON) 2024. Chicago, IL, November 2024, pp 1-6.

"A PINN-based Lifetime Predictor for Oil-Impregnated Paper Insulation Degradation in Power Transformers using Degree of Polymerization". Saleh, Alquennah, Ghrayeb, Refaat, Abu-Rub, Al-Hajri, Khatri, Olesz, Guzinski. 2024 IEEE 18th International Conference on Compatibility, Power Electronics and Power Engineering (CPE-POWERENG), Gdynia, Poland. June 2024. pp 1-6.

MOSAID Technologies Inc., Exhibit 2026
Page 2026 - 42
IPR2025-01487, Infineon Technologies Americas Corp. v. MOSAID Technologies Inc.

"*Power Delivery and Communication with an Infrared Laser (PaCIR)*", Vargass-Calderon, Eedara, Khatri. IEEE Conference on Technologies for Sustainability (SusTech) 2024. Portland, OR. Apr 2024.

"*Double Deep Q Networks Reinforcement Learning based Controller for Grid-Connected 7-Level PUC Inverter*", Alquennah, Chida, Zamzam, Trabelsi, Ghrayeb, Khatri. 2024 4th International Conference on Smart Grid and Renewable Energy (SGRE), Doha, Qatar, 2024, pp. 1-6.

"*A Review on the Applications of Blockchain-Based Smart Contracts in the Smart Grid*", Saleh, Khatri, Ghrayeb Refaat. 2024 4th International Conference on Smart Grid and Renewable Energy (SGRE), Doha, Qatar, 2024, pp. 1-6.

"*A Hardware Validation Framework for a Networked Dynamic Multi-factor Security Protocol*", Lee, Scott, Khatri Ghrayeb. 2023 6th International Conference on Advanced Communication Technologies and Networking (CommNet), Rabat, Morocco, 2023, pp. 1-7.

"*Scaled Population Division for Approximate Computing*", Bharathi, Khatri, Hu. IEEE/ACM International Symposium on Low Power Electronics and Design (ISLPED) 2023, Vienna, Austria, August 7-8, 2023. pp. 1-6.

"An Extremely Low-Voltage Floating Gate Artificial Neuron", Scott, Khatri. 2023 IEEE International Conference on Circuits and Systems (ISCAS), May 21-25, 2023. Monterey, CA.

"A Novel Pseudo-Flash Based Digital Low Dropout (LDO) Voltage Regulator", Lee, Khatri, Vrudhula. 2023 International Symposium on Quality Electronic Design (ISQED), April 5-7 2023. San Francisco, CA.

"A Flash-based Digital to Analog Converter for Low Power Applications", Scott, Khatri. IEEE 40th International Conference on Computer Design (ICCD), October 2022. Lake Tahoe, CA. pp 1-8.

"TD3lite: FPGA Acceleration of Reinforcement Learning with Structural and Representation Optimizations", Hu, Hu, Khatri. IEEE 32nd International Conference on Field-Programmable Logic and Applications (FPL), Aug-Sept 2022. Belfast, UK, pp 79-85.

"A Flash-based Current-mode IC to Realize Quantized Neural Networks", Scott, Lee, Khatri, Vrudhula. IEEE Design Automation and Test in Europe (DATE) Conference, Mar 2022, Antwerp, Belgium. pp 1029-1034.

"Detection and Classification of Defects in XLPE Power Cable Insulation via Machine Learning Algorithms", Saleh, Refaat, Khatri, Ghrayeb, Abu-Rub. IEEE 3rd International Conference on Smart Grid and Renewable Energy, Mar 20-22, 2022. Doha, Qatar. pp 1-6.

"Formal Verification of a Dynamic Multi-factor Secure Communication Protocol", Scott, Khatri, Ghrayeb. IEEE 3rd International Conference on Smart Grid and Renewable Energy, Mar 20-22, 2022. Doha, Qatar. pp 1-6.

"CIDAN: Computing in DRAM with Artificial Neurons", Singh, Wagle, Vrudhula, Khatri. 39th IEEE International Conference on Computer Design (ICCD) 2021, pp 349-356, Oct 2021, virtual conference.

"NIST-Lite: Randomness Testing of RNGs on an Energy-Constrained Platform", Lee, Bharathi, Lansford, Khatri. 39th IEEE International Conference on Computer Design (ICCD) 2021, pp 41-48, October 2021, virtual conference. **Nominated for best paper award (one of 5 papers)**

MOSAID Technologies Inc., Exhibit 2026
Page 2026 - 43
IPR2025-01487, Infineon Technologies Americas Corp. v. MOSAID Technologies Inc.

"Scaled Population Subtraction for Approximate Computing", Bharathi, Hu, Khatri. 38th IEEE International Conference on Computer Design (ICCD) 2020, Oct 24-27, Virtual Conference. pp 348-355.

"*A Configurable BNN ASIC using a Network of Programmable Threshold Logic Standard Cells"*, Wagle, Khatri, Vrudhula. 38th IEEE International Conference on Computer Design (ICCD) 2020, Oct 24-27, Virtual Conference. pp 433-440.

"A Statistical Methodology for Post-Fabrication Weight Tuning in a Binary Perceptron", Azari, Wagle, Khatri, Vrudhula. IEEE 21st International Symposium on Quality Electronic Design (ISQED) 2020. Mar 25-26, 2020, Santa Clara, CA. pp 141-148.

"A Mathematical Framework for Exploring Protein Folding Dynamics using Probabilistic Model Checking", Biswas, Pal, Khatri. 3rd IEEE International Conference on Information and Computer Technologies (ICICT) 2020. Mar 9-12, 2020, San Jose, CA. pp 114-123.

"Scaled Population Arithmetic for Efficient Stochastic Computing". Zhou, Khatri, Hu, Liu. 25th Asia and South Pacific Design Automation Conference (ASPDAC) 2020. Jan 13-16, 2020. Beijing, China. pp. 611-616.

"Threshold Logic in a Flash", Wagle, Singh, Yang, Khatri, Vrudhula. 37th IEEE International Conference on Computer Design (ICCD), 2019. Abu Dhabi, UAE, pp 550-558. Nov 17-20, 2019.

"PAU: A Programmable Arithmetic Unit for use in Modern Microprocessors" Fairouz, Douglass, Bharathi, Khatri. 37th IEEE International Conference on Computer Design (ICCD), 2019. Abu Dhabi, UAE, Nov 17-20, 2019.

"A Memory-Efficient Markov Decision Process Computation Framework Using BDD-based Sampling Representation". Zhou, Khatri, Hu, Liu. Proceedings of the Design Automation Conference, 2019. Las Vegas, NV, June 2-6, 2019.

"Synchronization of Ring-Based Resonant Standing Wave Oscillators for 3D Clocking Applications", Douglass, Khatri. IEEE International Conference on Computer Design, Orlando, FL, Oct 2018. pp 318-325.

"A Plain-Text Incremental Compression (PIC) Technique with Fast Lookup Ability", Bharathi, Kumar, Fairouz, Al Kawam, Khatri. IEEE International Conference on Computer Design, Orlando, FL, Oct 2018. pp 389-396.

"*A Homomorphic Encryption Scheme Based on Affine Transforms*", Loyka, Zhou, Khatri. Proceedings of the 2018 ACM Great Lakes Symposium on VLSI (GLSVLSI), May 23-25, 2018, Chicago, IL. pp 51-56.

"*An FPGA-based Coprocessor for Hash Unit Acceleration*" Fairouz, Khatri. The 35th IEEE International Conference on Computer Design (ICCD). Nov 5-8, 2017, Boston, MA, pp 301 – 304.

"*Fast, Ring-Based Design of 3D Stacked DRAM*", Douglass, Khatri. The 35th IEEE International Conference on Computer Design (ICCD) 2017, Nov 5-8, 2017, Boston, MA, pp 665-672.

"Fast and Highly Scalable Bayesian MDP on a GPU Platform", Zhou, Khatri, Hu, Liu, Sze. 8th ACM Conference on Bioinformatics, Computational Biology, and Health Informatics, 2017. Boston, MA, Aug 20-23 2017. Pp 158-167.

MOSAID Technologies Inc., Exhibit 2026
Page 2026 - 44
IPR2025-01487, Infineon Technologies Americas Corp. v. MOSAID Technologies Inc.

"SAT-Based Optimization for Flash-Based Digital Designs", Abusultan, Khatri. IEEE/ACM Design Automation Conferenec (DAC), Jun 18-22 2017, Austin, TX.

"Architectural Simulations of a Fast, Source-synchronous Ring-based Network-on-chip Design", Khatri, Mandal. 2017 AFCEA Autonomous Networking Technology Symposium (ANTS), June 13-14, Utica, NY.

"Design of a Flash-based Circuit for Multi-valued Logic", Abusultan, Khatri. Proceedings of the Great Lakes Symposium on VLSI (GLSVLSI) 2017, pp 41-46, May 10-12, 2017. Banff, Canada. 24.4% acceptance rate.

"Circuit Level Design of a Hardware Hash Unit for use in Modern Microprocessors", Fairouz, Abusultan, Khatri. Proceedings of the Great Lakes Symposium on VLSI (GLSVLSI) 2017, pp 101-106, May 10-12, 2017. Banff, Canada. 24.4% acceptance rate.

"A Robust C-element Design with Enhanced Metastability Performance", Sharma, Khatri. Proceedings of the Great Lakes Symposium on VLSI (GLSVLSI) 2017, pp 95-100, May 10-12, 2017. Banff, Canada. 24.4% acceptance rate**. Best Paper Candidate.**

"*A Flash-based Digital Circuit Design Flow*", Abusultan, Khatri. IEEE/ACM International Conference on Computer-Aided Design (ICCAD) 2016, Austin, TX, Nov 2016.

"A GPU-CPU Heterogeneous Algorithm for NGS Read Alignment", Al Kawam, Khatri Datta. International Conference on Intelligent Biology and Medicine (ICIBM), Houston, TX, November 2016.

"*A Practical Methodology to Validate the Statistical Behavior of Bloom Filters*", Kottapalli, Khatri. International Conference on Hardware/Software Codesign and System Synthesis (CODES+ISSS) 2016, Pittsburgh, PA, Oct 2016.

"Implementing low power digital circuits using flash devices", Abusultan, Khatri. 2016 IEEE 34th International Conference on Computer Design (ICCD), pp 109-116, Oct 3-5, 2016, Phoenix, AZ.

"A novel hardware hash unit design for modern microprocessors", Fairouz, Abusultan, Khatri. 2016 IEEE 34th International Conference on Computer Design (ICCD). pp 412-415, Oct 3-5, 2016, Phoenix, AZ.

"Exploring static and dynamic flash-based FPGA design topologies", Abusultan, Khatri. 2016 IEEE 34th International Conference on Computer Design (ICCD), pp 416-419, Oct 3-5, 2016, Phoenix, AZ.

"*A Ternary-valued, Floating Gate Transistor-based Circuit Design Approach"*, Abusultan, Khatri. IEEE International Symposium on VLSI (ISVLSI) 2016, Pittsburgh, PA. July 11-13, 2016, pp 719-724.

"*A GPU-based Implementation of a Sensor Tasking Methodology*", Chakravorty, Abusultan, Khatri. International Conference on Information Fusion (FUSION 2016), Heidelberg, Germany, July 5-8, 2016, pp 1398-1405.

"*Exploring Flash Devices to Implement Digital Circuits*", Abusultan, Khatri. IEEE/ACM Design Automation Conference (DAC), June 2016, Austin, TX.

"*The Neutron Detector Using Radiation Integrated Circuits*," Shah, Marianno, Khatri; 2016 IEEE Symposium on Radiation Measurements and Applications, Berkeley, CA, May 22-26, 2016.

MOSAID Technologies Inc., Exhibit 2026
Page 2026 - 45
IPR2025-01487, Infineon Technologies Americas Corp. v. MOSAID Technologies Inc.

"*GPU acceleration for Bayesian control of Markovian genetic regulatory networks*", Zhou, Hu, Khatri, Liu, Sze, Yousefi. Workshop on Bioinformatics for Precision Medicine (held in conjunction with the International Conference on Health Informatics (BHI)) 2016), Las Vegas, NV, February 2016. pp 304-307.

"Exploring the viability of stochastic computing", de Aguilar, Khatri. International Conference on Computer Design (ICCD), New York City, NY, Oct 19-21, 2015. pp 391-394.

"*Critical Remarks on Landauer's theorem of erasure dissipation and the related issues of the molecular engines: Maxwell-demon and Szilard-engine*", Kish, Granqvist, Khatri, Smulko, 23rd International Conference on Noise and Fluctuations (ICNF 2015), Xian, China, June 2-5, 2015.

"An Efficient Approach to Sample On-Chip Power Supplies", Murray, Khatri. ACM Great Lakes Symposium on VLSI, Pittsburgh, PA, May 20-22, 2015, pp 241-244.

"Delay, Power and Energy Tradeoffs in Deep Voltage-scaled FPGAs", Abusultan, Khatri. ACM Great Lakes Symposium on VLSI, Pittsburgh, PA, May 20-22, 2015, pp 111-114.

"*An Asynchronous Network-on-Chip Router with Low Standby Power*", Elshennawy, Khatri. Accepted at the 32nd IEEE International Conference on Computer Design (ICCD), Seoul, Korea. October 19-22, 2014. Acceptance rate 31.1%. To appear.

"*An Area-efficient Ternary CAM Design using Floating Gate Transistors*", *Fedorov*, Abusultan, Khatri. Accepted at the 32nd IEEE International Conference on Computer Design (ICCD), Seoul, Korea. October 19-22, 2014, pp55-60. Acceptance rate 31.1%.

"Simulation Analysis of Scintillation in a NaI Detector", *Shah*, Marianno, Khatri, Boyle. Accepted at 55th Annual Meeting of the Institute of Nuclear Materials Management (INMM), Atlanta, GA. July 20-24, 2014. **Best paper award, Nonproliferation and Arms Control division.**

"*Look-up Table Design for Deep Sub-threshold through Full-supply Operation*", Abusultan, Khatri. Accepted at the 22nd IEEE International Symposium on Field-Programmable Custom Computing Machines (FCCM), Boston, MA. May 11-13, 2014, pp 259-266. Acceptance rate 16.4%.

"A Comparison of FinFET based FPGA LUT Designs", Abusultan, Khatri. ACM/IEEE Great Lakes Symposium on VLSI Systems (GLSVLSI) 2014, Houston, TX. May 21-23, 2014. pp 353-358.

"Integrated Circuits Replacing PMTs" Shah, Marianno, Khatri. South Texas Chapter of the Health Physics Society's Student Presentations and Annual Business Meeting. March 2014.

"FPGA LUT Design for Wide-band Dynamic Voltage and Frequency Scaled Operation", Abusultan, Khatri, 22nd ACM/SIGDA International Symposium on Field-Programmable Gate Arrays (FPGA) 2014, Monterey, CA. February 25-28, 2014.

Invited paper *""Demonic" challenge: Landauer's erasure-dissipation*" Kish, Granqvist, Khatri. 44th Winter Colloquium on the Physics of Quantum Electronics (PQE) 2014, Snowbird, UT. January 5-9, 2014.

"Techniques to Improve the Efficiency of SAT Based Path Delay Test Generation", *Bian*, Walker, Khatri. 27th International Conference on VLSI Design (2014), Mumbai, India. January 5-9, 2014, pp 50-55.

MOSAID Technologies Inc., Exhibit 2026
Page 2026 - 46
IPR2025-01487, Infineon Technologies Americas Corp. v. MOSAID Technologies Inc.

Invited paper *"Demons: Maxwell demon; Szilard engine; and Landauer's erasure-dissipation*", Kish, Granqvist, Khatri, Wen. Hot Topic of Physical Informatics (HoTPI) 2013, Changsha, China. November 10-13, 2013.

"Noise-based algorithms for functional equivalence and tautology checking", Lin, Khatri. 31st IEEE International Conference on Computer Design (ICCD) 2013, Asheville, NC. October 6-9, pp 235-240.

"A low-jitter phase-locked resonant clock generation and distribution scheme", Mandal, Bollapalli, Jayakumar, Khatri, Mahapatra. 31st IEEE International Conference on Computer Design (ICCD) 2013, Asheville, NC. October 6-9, 2013, pp 487-490.

"Mixed structural-functional path delay test generation and compaction", Bian, Walker, Khatri, *Lahiri*. IEEE International Symposium on Defect and Fault Tolerance in VLSI and Nanotechnology Systems (DFT) 2013, New York City, NY. October 2-4, 2013, pp 7-12.

"*Solving the SAT Problem Using Noise-Based Logic on FPGAs*", Belsare, Elshennawy, Khatri. IEEE/ACM Design Automation Conference (DAC) 2013, Austin, TX. June 2-6, 2013.

"*FPGA LUT Design for Wide-Band Dynamic Voltage and Frequency Scaled Operation*", Abusultan, Khatri. IEEE/ACM Design Automation Conference (DAC) 2013, Austin, TX. June 2-6, 2013.

"*GPU Implementation of a Scalabale, Non-Linear Congruential Generator for Cryptography Applications*", Belsare, Liu, Khatri. ACM/IEEE Great Lakes Symposium on VLSI (GLSVLSI) 2013, Paris, France. May 2-3, 2013, pp 89-94.

"*A Source-synchronous Htree-based Network-on-Chip*", Mandal, Khatri, Mahapatra. ACM/IEEE Great Lakes Symposium on VLSI (GLSVLSI) 2013, Paris, France. May 2-3, 2013, pp 161-166.

"*Architecture and 3D Device Simulation of a PIN Diode-based Gamma Radiation Detector*", Elshennawy, Marianno, Khatri. ACM/IEEE Great Lakes Symposium on VLSI (GLSVLSI) 2013, Paris, France. May 2-3, 2013, pp 329-330.

"*Exploring topologies for source-synchronous ring-based Network-on-Chip*", Mandal, Khatri, Mahapatra. Design Automation and Test in Europe (DATE) Conference 2013, Grenoble, France. March 18-22, 2013, pp 1026-1031.

"*Crosstalk avoidance codes for 3D VLSI*", Kumar, Khatri. Design Automation and Test in Europe (DATE) Conference 2013, Grenoble, France. March 18-22, 2013, pp 1673-1678.

"*Timing aware partitioning for multi-FPGA based logic simulation using top-down selective hierarchy flattening*", Swaminathan, Lin, Khatri. IEEE International Conference on Computer Design (ICCD) 2012, Montreal, Canada. September 30 - October 3, 2012, pp 153-158.

"*An efficient arithmetic Sum-of-Product (SOP) based multiplication approach for FIR filters and DFT*", Kumar, Mandal, Khatri. IEEE International Conference on Computer Design (ICCD) 2012, Montreal, Canada. September 30 – October 3, 2012, pp 195-200.

"*Architectural simulations of a fast, source-synchronous ring-based Network-on-Chip design*", Mandal, Khatri, Mahapatra. IEEE International Conference on Computer Design (ICCD) 2012, Montreal, Canada. September 30 – October 3, 2012, pp 482-483.

MOSAID Technologies Inc., Exhibit 2026
Page 2026 - 47
IPR2025-01487, Infineon Technologies Americas Corp. v. MOSAID Technologies Inc.

Invited Paper, "*Application of logic synthesis to the understanding and cure of genetic diseases*", Lin, Khatri. IEEE/ACM Design Automation Conference (DAC) 2012, San Francisco, CA. June 3-7, 2012, pp 734-740.

"*Boolean Satisfiability using noise based logic*", Lin, Mandal, Khatri. IEEE/ACM Design Automation Conference (DAC) 2012, San Francisco, CA. June 3-7, 2012, pp 1260-1261.

"*Alleviating NBTI-induced failure in off-chip output drivers*", Bhadviya, Mandal, Khatri. ACM/IEEE Great Lakes Symposium on VLSI (GLSVLSI) 2012, Salt Lake City, UT. May 3-4, 2012, pp 295-298.

"*A fast, source-synchronous ring-based network-on-chip design*", Mandal, Khatri, Mahapatra. Design Automation and Test in Europe (DATE) Conference 2012, Dresden, Germany. March 12-16, 2012, pp 1489-1494.

"A Novel Cryptographic Key Exchange Scheme using Resistors", Lin, Ivanov, Johnson, Khatri. IEEE International Conference on Computer Design (ICCD) 2011, Amherst, MA. October 2011, pp 451-452.

Invited Paper, "*Noise-based Information Processing*", Kish, Khatri, Bezrukov, Peper, Gingl, Horváth. 21st International Conference on Noise and Fluctuations. Toronto, Canada. June 12-16, 2011, pp 28-33.

"*An Automated Approach for Minimum Jitter Buffered H-tree Construction*", Mandal, Jayakumar, Bollapalli, Khatri, Mahapatra. 24th International Conference on VLSI Design, Chennai, India. January 2-7, 2011, pp 76-81.

"*Interconnected Tile Standing Wave Resonant Oscillator based Clock Distribution Circuits*", Mandal, Karkala, Khatri, Mahapatra. 24th International Conference on VLSI Design, Chennai, India. January 2-7, 2011, pp 82-87.

"*Efficient Arithmetic Sum-of-Product (SOP) Based Multiple Constant Multiplication (MCM) for FFT*", Karkala, Wanstrath, Lacour, Khatri. International Conference on Computer-Aided Design (ICCAD) 2010, San Jose, CA. November 7-11, pp 735~738.

"*Exploring a Circuit Design Approach Based on One-Hot Multi-Valued Domino Logic*", Gope, Lin, Khatri. 2010 IEEE International Midwest Symposium on Circuits & Systems (MWSCAS), Seattle, WA. August 1-4, 2010, pp 69-72.

"*Minimum Leakage Vector Computation Using Weighted Partial MaxSAT*", Singh, Gulati, Khatri. 2010 IEEE International Midwest Symposium on Circuits & Systems (MWSCAS), Seattle, WA. August 1-4, 2010, pp 201-204.

"*Unique Radiation Detection Method Using Si based Integrated Circuits*", Marianno, Khatri. 2010 Annual Meeting of the Health Physics Society, Salt Lake City, UT. June 27 - July1, 2010.

"An Efficient Pulse Flip-Flop Based Launch-on-Shift Scan Cell", Kumar, Bollapalli, Khatri. IEEE International Symposium on Circuits and Systems (ISCAS) 2010, Paris, France. May 30 - June 2, 2010, pp 4105-4108.

"VLSI Implementation of a Non-Linear Feedback Shift Register for High-Speed Cryptography Applications", Lin, Khatri. Great Lakes Symposium on VLSI (GLS-VLSI) 2010. Providence, RI. May 16-18, 2010, pp 381-384.

MOSAID Technologies Inc., Exhibit 2026
Page 2026 - 48
IPR2025-01487, Infineon Technologies Americas Corp. v. MOSAID Technologies Inc.

"Boolean Satisfiability on a Graphics Processor", Gulati, Khatri. Great Lakes Symposium on VLSI (GLS-VLSI) 2010. Providence, RI. May 16-18, 2010, pp 123-126.

"A SAT-based Scheme to Determine Optimal Fix-free Codes", Abedini, Khatri, Savari. Data Compression Conference (DCC), Snowbird, UT. March 24-26, 2010, pp 169-178. **Best student paper award.**

"Implementing Digital Logic with Sinusoidal Supplies", Bollapalli, Khatri, Kish. Design Automation and Test in Europe (DATE) conference, 2010, Dresden, Germany. March 8-12, 2010, pp 315-318.

Invited Paper *"DFM-Aware Structured ASIC Design"*, Gopalani, Garg, Khatri. International Symposium on Integrated Circuits (ISIC) 2009, Singapore, December 14-16, 2009, pp 29-32.

Invited Paper *"A PTL based Highly Testable Structured ASIC Design Approach"*, Gulati, Jayakumar, Khatri. International Symposium on Integrated Circuits (ISIC) 2009, Singapore. December 14-16, 2009, pp 33-36.

"A Variation Tolerant Circuit Design Approach using Parallel Gates", Garg, Khatri. Austin Conference on Integrated Systems and Circuits (ACISC) 2009, Austin, TX. October 26-27, 2009.

"Implementing Digital Logic with Sinusoidal Supplies", Bollapalli, Khatri, Kish. Austin Conference on Integrated Systems and Circuits (ACISC) 2009, Austin, TX. October 26-27, 2009, pp 315-318.

"A Weighted Partial MaxSAT Based Method to Determine the MLV for Combinational Designs", Singh, Gulati, Khatri. Austin Conference on Integrated Systems and Circuits (ACISC) 2009, Austin, TX. October 26-27, 2009.

"*On-chip Bidirectional Wiring for Heavily Pipelined Systems using Network Coding*", Bollapalli, Garg, Gulati, Khatri. IEEE International Conference on Computer Design (ICCD) 2009, Lake Tahoe, CA. October 4-7, 2009.

"*A PLL Design based on a Standing Wave Resonant Oscillator*", Karkala, Bollapalli, Garg, Khatri. IEEE International Conference on Computer Design (ICCD) 2009, Lake Tahoe, CA. October 4-7, 2009.

"*A Robust Pulsed Flip-Flop and its use in Enhanced Scan Design*", Kumar, Bollapalli, Garg, Soni, Khatri. IEEE International Conference on Computer Design (ICCD) 2009, Lake Tahoe, CA. October 4-7, 2009, pp 97-102.

"*A Radiation Tolerant Phase Locked Loop Design for Digital Electronics*", Kumar, Karkala, Garg, *Jindal*, Khatri. IEEE International Conference on Computer Design (ICCD) 2009, Lake Tahoe, CA. October 4-7, 2009, pp 505-510.

"*3D Simulation and Analysis of the Radiation Tolerance of Voltage Scaled Digital Circuits*", Garg, Khatri. IEEE International Conference on Computer Design (ICCD) 2009, Lake Tahoe, CA. October 4-7, 2009, pp 498-504.

Invited Paper "*Highly Parallel Decoding of Space-Time Codes on Graphics Processing Units",* Bollapalli, *Wu*, Gulati, Khatri, Calderbank. Annual Allerton Conference on Communication, Control and Computing, 2009, Urbana, IL. September 30 – October 2, 2009, pp 1262-1269.

"*RF Receiver and Transmitter for Insect Mounted Sensor Platform*", Duperre, Burgett, Garg, Khatri. IEEE Midwest Symposium on Circuits and Systems (MWSCAS) 2009, Cancun, Mexico. August 2-5, 2009, pp 264-267.

MOSAID Technologies Inc., Exhibit 2026
Page 2026 - 49
IPR2025-01487, Infineon Technologies Americas Corp. v. MOSAID Technologies Inc.

"*An Automated Approach for SIMD Kernel Generation for GPU based Software Acceleration*", Gulati, Khatri. Symposium on Application Accelerators in High Performance Computing (SAAHPC) 2009, Urbana, IL. July 28-30, 2009.

"Sorting Binary Numbers in Hardware - a Novel Algorithm and its Implementation", Alaparthi, Gulati, Khatri. International Symposium on Circuits and Systems (ISCAS) 2009, Taipei, Taiwan. May 24-27, 2009.

"Low Power and High Performance SRAM Design using Bank-based Selective Forward Body Bias", Bollapalli, Garg, Gulati, Khatri. IEEE/ACM Great Lakes Symposium on VLSI (GLSVLSI) 2009, Boston, MA. May 10-12, 2009, pp 441-444.

"Robust Window-based Multi-node Technology-Independent Logic Minimization", Cobb, Gulati, Khatri. IEEE/ACM Great Lakes Symposium on VLSI (GLSVLSI) 2009, Boston, MA. May 10-12, 2009, pp 357-362.

"SEU Hardened Clock Regeneration Circuits", Dash, Garg, Khatri, Choi. International Symposium on Quality Electronic Design (ISQED) San Jose, CA. March 16-18, 2009, pp 806-813.

"Design and Implementation of a Sub-threshold BFSK Transmitter", Paul, Garg, Khatri, Vaidya. International Symposium on Quality Electronic Design (ISQED) San Jose, CA. March 16-18, 2009, pp 664-672.

"Closed-Loop Modeling of Power and Temperature Profiles of FPGAs", Gulati, Khatri, Li. ACM/SIGDA International Symposium on Field Programmable Gate Arrays (FPGA). Monterey, CA. February 22-24, 2009, pp 287.

"Accelerating Statistical Static Timing Analysis Using Graphics Processing Units", Gulati, Khatri. IEEE/ACM Asia and South Pacific Design Automation Conference (ASP-DAC) 2009, Yokohama, Japan. January 19-22, 2009, pp 260-265.

"Efficient Analytical Determination of the SEU-induced Pulse Shape", Garg, Khatri. IEEE/ACM Asia and South Pacific Design Automation Conference (ASP-DAC) 2009, Yokohama, Japan. January 19-22, 2009, pp 461-467. **Selected among the finalists for the best paper award at the conference.**

"Fast Circuit Simulation on Graphics Processing Units", Gulati, Croix, Khatri, Shastry. IEEE/ACM Asia and South Pacific Design Automation Conference (ASP-DAC) 2009, Yokohama, Japan. January 19-22, 2009, pp 403-408.

"A Novel, Highly SEU Tolerant Digital Circuit Design Approach", Garg, Khatri. IEEE International Conference on Computer Design (ICCD) 2008, Lake Tahoe, CA. October 12-15, 2008, pp 14-20.

"A Timing-Driven Synthesis Approach of a Fast Four-Stage Hybrid Adder in Sum-of-Products", Das, Khatri. IEEE Midwest Symposium on Circuits and Systems (MWSCAS) 2008, Knoxville, TN. August 10-13, 2008, pp 507-510.

"Forbidden Transition Free Crosstalk Avoidance CODEC Design", Duan, Khatri. ACM/EDAC/IEEE Design Automation Conference (DAC) 2008, Anaheim, CA. June 8-13, 2008, pp 986-991.

"Towards Acceleration of Fault Simulation using Graphics Processing Units", Gulati, Khatri. ACM/ EDAC/IEEE Design Automation Conference (DAC) 2008, Anaheim, CA. June 8-13, 2008

MOSAID Technologies Inc., Exhibit 2026
Page 2026 - 50
IPR2025-01487, Infineon Technologies Americas Corp. v. MOSAID Technologies Inc.

pp 822-827.

"A Fast, Analytical Estimator for the SEU-induced Pulse Width in Combinational Designs", Garg, Nagpal, Khatri. ACM/ EDAC/IEEE Design Automation Conference (DAC) 2008, Anaheim, CA. June 8-13, 2008, pp 918-923.

"*Modeling Dynamic Stability of SRAMs in the Presence of Single Event Upsets (SEUs)*", Garg, Li, Khatri. IEEE International Symposium on Circuits and Systems, Seattle, WA. May 18-21, 2008, pp 1788-1791.

"Accelerating Statistical Static Timing Analysis Using Graphics Processing Units", Gulati, Khatri. Austin Conference on Integrated Systems and Circuits (ACISC) 2008, Austin, TX. May 7-9, pp 260-265.

"*A Lithography-friendly Structured ASIC Design Approach*", Gopalani, Garg, Khatri, Cheng. IEEE Great Lakes Symposium on VLSI, Orlando, FL. May 4-6, 2008, pp 315-320.

"*Pipelined Network of PLA Based Circuit Design*", Paul, Garg, Khatri. IEEE Great Lakes Symposium on VLSI, Orlando, FL, May 4-6, 2008, pp 213-218.

"*A Robust, Fast Pulsed Flip-Flop Design*", *Venkatraman*, Garg, Khatri. IEEE Great Lakes Symposium on VLSI, Orlando, FL. May 4-6, 2008, pp 119-122.

"*Improving FPGA routability using network coding*", Gulati, Khatri. IEEE Great Lakes Symposium on VLSI, Orlando, FL. May 4-6, 2008, pp 147-150.

"*A Delay-Efficient Radiation-Hard Digital Design Approach Using CWSP Elements*", Nagpal, Garg, Khatri. Design Automation, and Test in Europe (DATE) Conference 2008, Munich, Germany. 10-14 March, 2008, pp 354-359.

"*Energy Efficient and High Speed On-Chip Ternary Bus*", Duan, Khatri. Design Automation, and Test in Europe (DATE) Conference 2008, Munich, Germany. 10-14 March, 2008, pp 515-518.

"*A Single-Supply True Voltage Level Shifter*", Garg, Mallarapu, Khatri. Design Automation, and Test in Europe (DATE) Conference 2008, Munich, Germany. 10-14 March, 2008, pp 979-984.

"*Clock distribution scheme using coplanar transmission lines*", Cordero, Khatri. Design Automation, and Test in Europe (DATE) Conference 2008, Munich, Germany, 10-14 March, 2008, pp 985-990.

"*A Merged Synthesis Technique for Fast Arithmetic Blocks Involving Sum-of-Products and Shifters*", Das, Khatri. 21st International Conference on VLSI Design 2008, Hyderabad, India. January 4-8, 2008, pp 572-579.

"*A Timing-Driven Synthesis Technique for Arithmetic Product-of-Sum Expressions*", Das, Khatri. 21st International Conference on VLSI Design 2008, Hyderabad, India. January 4-8, 2008, pp 635-640.

"*An Inversion-Based Synthesis Approach for Area and Power Efficient Arithmetic Sum-of-Products*", Das, Khatri. 21st International Conference on VLSI Design 2008, Hyderabad, India. January 4-8, pp 653-659.

Invited Paper "*Extreme Low Power Computing using Sub-threshold Circuits",* Segundo Magno Congreso Interancional del CIC 2007, Mexico City, Mexico. November 6-8, 2007.

MOSAID Technologies Inc., Exhibit 2026
Page 2026 - 51
IPR2025-01487, Infineon Technologies Americas Corp. v. MOSAID Technologies Inc.

"*VLSI Implementation of a Staggered Sphere Decoder Design for MIMO Detection*", Bhagawat, Ekambavanan, Das, Choi, Khatri. 45th Annual Allerton Conference on Communication, Control and Computing, Urbana, IL. September 26-28, 2007, pp 228-235.

"*Toggle Equivalence Preserving (TEP) Logic Optimization*", Goldberg, Gulati, Khatri. 10th Euromicro Conference on Digital System Design (Architectures, Methods and Tools), Lubeck, Germany. August 29-31, 2007, pp 271-279.

"*A Generic Radar Processor Design Using Software Defined Radio*", Brimeyer, Martin, Loew, Farquharson, Khatri, Paul. 33rd American Meteorology Society (AMS) Conference on Radar Meteorology, Cairns, Australia. August 6-10, 2007.

"*Timing-Driven Decomposition of a Fast Barrel Shifter*", Das, Khatri. IEEE International Midwest Symposium on Circuits and Systems (MWCAS) 2007, Montreal, Canada. August 5-8, 2007, pp 574-577.

"*FPGA Based Signal Processing Platform For Weather Radar*", Paul, Khatri, Martin, Brimeyer, Loew, Jothiram. International Geoscience and Remote Sensing Symposium (IGARSS) 2007, Barcelona, Spain. July 23-27, 2007.

"*Area-reducing Sharing of Mutually Exclusive Multiplier, MAC, Adder and Subtractor blocks*", Das, Khatri. IASTED Fifth International Conference on Circuits, Signals and Systems (CSS) 2007, Banff, Alberta. July 2-4, 2007, pp 269-272.

"*A Timing-Driven Hybrid-Compression Algorithm for Faster Sum-of-Products*", Das, Khatri. IASTED Fifth International Conference on Circuits, Signals and Systems (CSS) 2007, Banff, Alberta. July 2-4, 2007, pp 273-278.

"*Generation of the Optimal Bit-Width Topology of the Fast Hybrid Adder in a Parallel Multiplier*", Das, Khatri. International Conference on Integrated Circuit Design and Technology (ICICDT) 2007, Austin, TX. May 30 - June 1, 2007, pp 1-6.

"*A Structured ASIC Design Approach Using Pass Transistor Logic*", Gulati, Jayakumar, Khatri. IEEE International Symposium on Circuits and Systems (ISCAS) 2007, New Orleans, LA. May 27-30, pp 1787-1790.

"*An Algorithm to Minimize Leakage through Simultaneous Input Vector Control and Circuit Modification*", Jayakumar, Khatri. Design Automation and Test in Europe (DATE) Conference 2007, Nice, France. April 16-20, 2007, pp 618-623.

"*A Methodology for Interconnect Dimension Determination*", Cobb, Garg, Khatri. ACM International Symposium on Physical Design (ISPD) 2007, Austin, TX. March 18-21, 2007, pp 189-195.

"*Network Coding for Routability Improvement in VLSI*", Jayakumar, Gulati, Khatri, Sprintson. IEEE International Conference on Computer-Aided Design (ICCAD), San Jose, CA. November 5-9, 2006, pp 820-823.

"*On the Improvement of Statistical Static Timing Analysis*", Garg, Jayakumar, Khatri. IEEE International Conference on Computer Design (ICCD), San Jose, CA. October 1-4, 2006, pp 37-42.

"*An Efficient, Scalable Hardware Engine for Boolean Satisfiability*", Waghmode, Gulati, Khatri,

MOSAID Technologies Inc., Exhibit 2026
Page 2026 - 52
IPR2025-01487, Infineon Technologies Americas Corp. v. MOSAID Technologies Inc.

Shi. IEEE International Conference on Computer Design (ICCD), San Jose, CA. October 1-4, 2006, pp 326-331.

"*CMOS Comparators for High-Speed and Low-Power Applications*", Menendez, Maduike, Garg, Khatri. IEEE International Conference on Computer Design (ICCD), San Jose, CA. October 1-4, 2006, pp 76-81.

"*A Design Approach for Radiation-hard Digital Electronics*", Garg, Jayakumar, Khatri. ACM/IEEE Design Automation Conference (DAC). July 24-28, 2006, pp 773-778.

"*A PLA based Asynchronous Micropipelining Approach for Subthreshold Circuit Design*", Jayakumar, Garg, Gamache, Khatri. ACM/IEEE Design Automation Conference (DAC). July 24-28, 2006, pp 419-424.

"*Generalized Buffering of PTL Logic Stages using Boolean Division*", Garg, Khatri. IEEE International Symposium on Circuits and Systems (ISCAS), Kos, Greece. May 21-24, 2006, pp 5615-5618.

"*Efficient Don't Care Computation for Hierarchical Designs*", Gulati, Lovell, Khatri. IEEE International Symposium on Circuits and Systems (ISCAS), Kos, Greece. May 21-24, 2006, pp 3037-3040.

"*Computing During Supply Voltage Switching in DVS Enabled Real-time Processors*", Duan, Khatri. IEEE International Symposium on Circuits and Systems (ISCAS), Kos, Greece. May 21-24, 2006, pp 5115-5118.

"*A Probabilistic Method to Determine the Minimum Leakage Vector for Combinational Designs*", Gulati, Jayakumar, Khatri. IEEE International Symposium on Circuits and Systems (ISCAS), Kos, Greece. May 21-24, 2006, pp 2241-2244.

"*Memory-based Cross-talk Canceling CODECs for On-chip Buses*", Duan, Gulati, Khatri. IEEE International Symposium on Circuits and Systems (ISCAS), Kos, Greece. May 21-24, 2006, pp 1119-1122.

"*A High-speed Fully Programmable VLSI Decoder for Regular Low Density Parity Check (LDPC) Codes*", *Kim*, Jayakumar, *Bhagawat*, *Selvarathinam*, Choi, Khatri. IEEE International Conference on Acoustics, Speech, and Signal Processing (ICASSP) 2006, May 14-19, Toulouse, France. May 14-19, 2006, pp III:972-III:975.

"*Implementation of MOSFET based Capacitors for Digital Applications*", *Shen*, Khatri, Zourntos. IEEE/ACM Great Lakes Symposium on VLSI (GLSVLSI), April 30 - May 2, 2006, Philadelphia, PA. April 30 - May 2, 2006, pp 180-185.

"*Resource and Delay Efficient Matrix Multiplication using Newer FPGA Devices*", Campbell, Khatri. IEEE/ACM Great Lakes Symposium on VLSI (GLSVLSI), 2006, Philadelphia, PA. April 30 - May 2, 2006, pp 308-311.

"*A Design Flow to Optimize Circuit Delay by Using Standard Cells and PLAs*", Garg, Sanchez, Gulati, Jayakumar, Gupta, Khatri. IEEE/ACM Great Lakes Symposium on VLSI (GLSVLSI), Philadelphia, PA. April 30 - May 2, 2006, pp 217-222.

"*Bus Stuttering : An Encoding Technique to Reduce Inductive Noise in Off-Chip Data Transmission*", LaMeres, Khatri. Design Automation and Test in Europe (DATE) conference, Munich, Germany. March 6-10, 2006, pp 522-527.

MOSAID Technologies Inc., Exhibit 2026
Page 2026 - 53
IPR2025-01487, Infineon Technologies Americas Corp. v. MOSAID Technologies Inc.

"*Impedance Matching Techniques for VLSI Packaging*", LaMeres, Garg, Gulati, Khatri. DesignCon 2006, Santa Clara, CA. February 6-9, 2006.

"*Controlling Inductive Cross-talk and Power in Off-chip Buses using CODECs*", LaMeres, Gulati, Khatri. Asia Pacific Design Automation Conference (ASPDAC) 2006, Yokohama, Japan. January 24-27, pp 850-855.

"*Efficient SAT-based Combinational ATPG using Multi-level Don't-Cares*", Saluja, Khatri. International Test Conference (ITC) 2005, Austin, TX. November 8-10, pp 1038-1047.

"*Practical Techniques to Reduce Skew and its Variations in Buffered Clock Networks*", *Venkataraman*, Jayakumar, Hu, Li, Khatri, *Rajaram*, McGuinness, Alpert. International Conference on Computer-Aided Design (ICCAD) 2005, San Jose, CA. November 6-10, 2005, pp 592-596.

"*X-Routing using Two Manhattan Route Instances*", *Ahmad*, Jayakumar, Balasubramanian, Hursey, Khatri, Mahapatra. International Conference on Computer Design (ICCD) 2005, San Jose, CA. October 2-5, 2005, pp 45-50.

"*Minimum Energy Near-threshold Network of PLA based Design*", Jayakumar, Khatri. International Conference on Computer Design (ICCD) 2005, San Jose, CA. October 2-5, 2005, pp 399-404.

"*Broadband Impedance Matching for Inductive Interconnect in VLSI Packages*", LaMeres, Khatri. International Conference on Computer Design (ICCD) 2005, San Jose, CA. October 2-5, 2005, pp 683-688. **Best Paper Award, ICCD 2005** .

"*Design of a Low-Power Differential Repeater Using Low-Voltage Swing and Charge Recycling*", LaMeres, Khatri. DesignCon East 2005, Worcester, MA. September 19-21, 2005.

"*Performance Model for Inter-Chip Busses Considering Bandwidth and Cost*" LaMeres, Khatri. DesignCon East, September 19-21, Worcester, MA. September 19-21, 2005. **Best Paper Award, DesignCon 2005**.

"*An Algebraic Decision Diagram (ADD) Based Technique to find Leakage Histograms of Combinational Designs*", Gulati, Jayakumar, Khatri. International Symposium on Low Power Electronic Design (ISLPED) 2005, August 8-10, San Diego, CA. August 8-10, 2005, pp 111-114.

"*A Self-adjusting Scheme to Determine the Optimum RBB by Monitoring Leakage Currents*", Jayakumar, Dhar, Khatri. Design Automation Conference (DAC) 2005, Anaheim, CA. June 13-17, 2005, pp 43-46.

"*A Variation-tolerant Sub-threshold Design Approach*", Jayakumar, Khatri. Design Automation Conference (DAC) 2005, Anaheim, CA. June 13-17, 2005, pp 716-719.

"Performance Model for Inter-chip Communication Considering Inductive Cross-talk and Cost", LaMeres, Khatri. IEEE International Symposium on Circuits and Systems, Kobe, Japan. May 23 – 26, 2005, pp 4130-4133.

"A Boolean Satisfiability based Solution to the Routing and Wavelength Assignment Problem in Optical Telecommunication Networks", Valavi, Saluja, Khatri. International Conference on Communications (ICC), Seoul, Korea. May 16 – 20, 2005, pp 1802-1806.

"*Encoding-based Minimization of Inductive Cross-talk for Off-chip Data Transmission*", LaMeres, Khatri. Design Automation and Test in Europe (DATE) conference, March 2005, pp 1318-1323.

MOSAID Technologies Inc., Exhibit 2026
Page 2026 - 54
IPR2025-01487, Infineon Technologies Americas Corp. v. MOSAID Technologies Inc.

"*A Dynamic Voltage Scaling Algorithm for Energy Reduction in Hard Real-Time Systems*", Culver, Khatri. Asia South Pacific Design Automation Conference (ASP-DAC) 05, January 2005, pp 842-845.

"*Non-Manhattan Routing using a Manhattan Router*", Hursey, Jayakumar, Khatri. VLSI Design 05, pp 445-450. **Selected among the top 4 papers at the conference, and was a best paper nominee.**

"*Design of a Low-power Differential Repeater using Low Voltage Swing and Charge Recycling*", LaMeres, Khatri. DesignCon-05, January 2005.

"*Performance Model for Inter-chip Busses Considering Bandwidth and Cost*", LaMeres, Khatri. DesignCon-05, January 2005. **Selected among the finalists for the best paper award at the conference.**

"*A Novel Clock Distribution and Dynamic De-skewing Methodology*", Kapoor, Jayakumar, Khatri. International Conference on Computer-Aided Design (ICCAD), November 2004, pp 626-631.

"*A METAL and VIA Maskset Programmable VLSI Design Methodology using PLAs*", Jayakumar, Khatri. International Conference on Computer-Aided Design (ICCAD), November 2004, pp 590-594.

"*High Throughput VLSI Implementations of Iterative Decoders and Related Code Construction Problems*", *Nagarajan*, Jayakumar, Khatri, Milenkovic. GlobeComm, 2004, pp 361-365.

"*A Robust Algorithm For Approximate Compatible Observability Don't Care (CODC) Computation*", Saluja, Khatri. Design Automation Conference (DAC), June 2004, pp 422-427.

"*Exploiting Crosstalk to Speed up On-chip Buses*", Duan, Khatri. Design Automation and Test in Europe (DATE) conference, February 2004, pp 778-783.

"*A Differential Amplifier Based Technique to Reduce Delay in Long Interconnect*", *Purandare*, Sung, Khatri. International Conference on VLSI Design, January 2004.

"*A Fast Ternary CAM Design for IP Networking Applications*", Gamache, Pfeffer, Khatri. 12th International Conference on Computer Communications and Networks (IC3N-03), Dallas, TX. October 2003, pp 434-439. **Selected among the finalists for the best paper award at the conference.**

"*IP Routing Table Compression Using ESPRESSO-MV*", Bian, Khatri. 11th International Conference on Networking (ICON-03), Sydney, Australia. September 2003, pp 167-172.

"*An ASIC Design Methodology with Predictably Low Leakage, using Leakage-immune Standard Cells*", Jayakumar, Khatri. International Symposium on Low Power Electronics and Design (ISLPED-03), Seoul, Korea. August 2003, pp 128-133.

"Addressing The Timing Closure Problem By Integrating Logic Optimization And Placement," Gosti, Khatri, Sangiovanni-Vincentelli. IEEE/ACM International Conference on Computer-Aided Design (ICCAD-2001). November 2001, Santa Clara, CA. November 2001, pp 224-231.

"Analysis and Avoidance of Cross-talk in On-Chip Buses", Duan, Tirumala, Khatri. Published at IEEE Symposium on High-Performance Interconnects (HOT Interconnects 2001), Stanford, CA. August 22-24, 2001, pp 133-138.

MOSAID Technologies Inc., Exhibit 2026
Page 2026 - 55
IPR2025-01487, Infineon Technologies Americas Corp. v. MOSAID Technologies Inc.

"A Regularity-driven Fast Gridless Detailed Router for High Frequency Datapath Designs", Das, Khatri. Presented at International Symposium on Physical Design (ISPD-01), Sonoma, CA. April 1-4, 2001, pp 130-135.

"Cross-talk Immune VLSI Design using a Network of PLAs Embedded in a Regular Layout Fabric"- Khatri, Brayton, Sangiovanni-Vincentelli. IEEE/ACM International Conference on Computer-Aided Design (ICCAD-2000), Santa Clara, CA. November 2000, pp 412-419.

"Binary and Multi-Valued SPFD-based Wire Removal in PLA Networks", Khatri, *Sinha*, Brayton, Sangiovanni-Vincentelli. International Conference on Computer Design (ICCD-2000), Austin, TX. September 17-20, 2000, pp 494-503.

"A Novel VLSI Layout Fabric for Deep Sub-Micron Applications"- Khatri, *Mehrotra*, Brayton, Sangiovanni-Vincentelli, Otten. 36th Design Automation Conference (DAC-99), New Orleans, LA. June 21-25, 1999, pp 491-496.

Invited paper *"Multi-valued Logic Synthesis"*- Brayton, Khatri. 12th International Conference on VLSI Design (VLSI-99), Goa, India. January 7-10, 1999, pp 196-205.

"Sequential Multi-valued Network Simplification using Redundancy Removal" - Khatri, Brayton, Sangiovanni-Vincentelli. 12th International Conference on VLSI Design, (VLSI-99), Goa, India. January 7-10, 1999, pp 206-211.

"A Timed Automaton-based Method for Accurate Circuit Delay Computation in the Presence of Cross-talk"- *Tasiran*, Khatri, *Yovine*, Brayton, Sangiovanni-Vincentelli. International Conference on Formal Methods in Computer-Aided Design, Palo Alto, CA. November 1998, pp 149-166.

"VIS" - Brayton, Hachtel, Sangiovanni-Vincentelli, Somenzi, *Aziz*, *Cheng*, *Edwards*, *Khatri*, *Kukimoto*, *Pardo*, *Qadeer*, *Ranjan*, *Sarwary*, *Shiple*, *Swamy*, *Villa*. International Conference on Formal Methods in Computer-Aided Design (FMCAD), Palo Alto, CA. November 1996, pp 248-256.

"Decomposition Techniques for Efficient ROBDD Construction" - Jain, *Narayan*, *Coelho*, Khatri, Sangiovanni-Vincentelli, Brayton, Fujita. International Conference on Formal Methods in Computer-Aided Design, Palo Alto, CA. November 1996, pp 248-256.

"VIS: A System for Verification and Synthesis" - Brayton, Hachtel, Sangiovanni-Vincentelli, Somenzi, *Aziz*, *Cheng*, *Edwards*, *Khatri*, *Kukimoto*, *Pardo*, *Qadeer*, *Ranjan*, *Sarwary*, *Shiple*, *Swamy*, *Villa*. Presented at the 8th International Computer-Aided Verification Conference (CAV), New Brunswick, NJ. July-August 1996, pp 428-432.

"Engineering Change in a Non-Deterministic FSM Setting" - Khatri, *Narayan*, *Krishnan*, McMillan, Sangiovanni-Vincentelli, Brayton. Presented at the 33rd Design Automation Conference, Las Vegas, NV. June 1996, pp 451-456.

"A Study of Composition Schemes for Mixed Apply/Compose Based Construction of ROBDDs" - *Narayan*, Khatri, Jain, Fujita, Brayton, Sangiovanni-Vincentelli. Presented at the Ninth International Conference on VLSI Design, Bangalore, India. January 1996, pp 249-253.

Conference Publications Under Review (All listed papers are peer-reviewed):

"*Classification of Corrosion in Underground Power Cables Using CNNs and Microscopic Imaging*", Alquennah, Saleh, Refaat, Ghrayeb, Abu-Rub, Olesz, Al-Hajri, Khatri. Submitted to 2025 IEEE 21st International Conference on Smart Technologies (IEEE EUROCON 2025).

MOSAID Technologies Inc., Exhibit 2026
Page 2026 - 56
IPR2025-01487, Infineon Technologies Americas Corp. v. MOSAID Technologies Inc.

Workshop Publications (All listed papers are peer-reviewed, except for invited papers):

"A Comparison of Low Standby Power Techniques for an Asynchronous NoC Router", Fairouz, Khatri. 2017 IEEE Texas Workshop on Integrated System Exploration (TexasWISE). Dallas, TX, April 2017.

"Design of a Hardware Hash Unit for use in Modern Microprocessors", Fairouz, Khatri. 2017 IEEE Texas Workshop on Integrated System Exploration (TexasWISE). Dallas, TX, April 2017.

"*A Practical Methodology to Validate the Statistical Behavior of Bloom Filters*", Kottapalli, Khatri. IEEE Texas Workshop on Integrated System Exploration (TexasWISE) 2016, Houston, TX, May 2016

"*Accelerating Bayesian Control of Markovian Genetic Regulatory Networks on a GPU*", Zhou, Hu, Khatri, Liu, Sze, Yousefi. IEEE Texas Workshop on Integrated System Exploration (TexasWISE) 2016, Houston, TX, May 2016.

"*Ternary-valued Digital Circuit Implementation using Flash Transistors*", Abusultan, Khatri, Datta. IEEE Texas Workshop on Integrated System Exploration (TexasWISE) 2016, Houston, TX, May 2016.

"*A CPU-GPU Heterogeneous Algorithm for NGS Read Alignment*", Al Kawam, Khatri, Datta. IEEE Texas Workshop on Integrated System Exploration (TexasWISE) 2016, Houston, TX, May 2016.

"*Design of a Robust C-Element for Asynchronous Circuit Design*", Sharma, Khatri. IEEE Texas Workshop on Integrated System Exploration (TexasWISE) 2016, Houston, TX, May 2016.

"*An Increase in Optical Photon Collection Efficiency of a Sodium Iodide Crystal*," Shah, Marianno, Khatri. Health Physics Society 60th Annual Meeting, Indianapolis, IN, 2015.

Invited paper, *"Information, noise and energy dissipation: Laws, limits and applications*", Kish, Granqvist, Khatri, Sundqvist, Peper Plenary talk at International Workshop on Molecular Architectonics, Shiretoko, Hokkaido, Japan, August 3-6, 2015.

"*Radiation Detection Using Integrated Circuits*", *Shah*, Marianno, Khatri. Accepted at the 59th Annual Meeting of the Health Physics Society, Baltimore, MD. 2014.

"*An FPGA LUT Design to Explore the Power and Speed Tradeoff*", Abusultan, Khatri. Accepted at the 2014 IEEE Texas Workshop on Integrated System Exploration (TexasWISE), Austin, TX. March 21, 2014.

"*Correcting for Multiple Detections of the Same Event in a Multi-Sensor Environment*", Bass, Abusultan, Elshennawy, Khatri. Accepted at the 2014 IEEE Texas Workshop on Integrated System Exploration (TexasWISE), Austin, TX. March 21, 2014.

"*Gene Predictor Ranking and Function Selection Using Zhegalkin Functions*", Lin, Khatri. The First Workshop on Modeling of Biological Systems (MoBS) 2013, Austin, TX. June 2013.

"*A Technique for Fast Data Transfer using Sinusoidal Signals*", Mandal, Khatri, Entesari, Gharpurey, Abrahams, Mahapatra. IEEE Texas Workshop on Integrated System Exploration (TX-WISE) 2013, Winedale, TX. March 2013.

MOSAID Technologies Inc., Exhibit 2026
Page 2026 - 57
IPR2025-01487, Infineon Technologies Americas Corp. v. MOSAID Technologies Inc.

"*Determining gene function in Boolean networks using Boolean Satisfiability*", Lin, Khatri. IEEE International Workshop on Genomic Signal Processing and Statistics (GENSiPS) 2012, Washington, DC. December 2-4, 2012, pp 176-179.

"*Efficient Solid State Gamma Radiation Detector*," Elshennawy, Marianno, Khatri. Symposium on Radiation Measurements and Applications (SORMA) 2012, Berkeley, CA. May 14-17, 2012.

"Efficient Cancer Therapy using Boolean Networks and Max-SAT-based ATPG", Lin, Khatri. 2010 IEEE International Workshop on Genomic Signal Processing and Statistics (GENSIPS), San Antonio, TX. December 2011, pp 87-90.

"*Inference of Gene Predictor Set using Boolean Satisfiability*", Lin, Khatri. 2010 IEEE International Workshop on Genomic Signal Processing and Statistics (GENSIPS), Cold Spring Harbor, NY. November 2010, pp 1-4.

"*Fault Table Generation using Graphics Processing Units*", Gulati, Khatri. IEEE International High Level Design Validation and Test Workshop (HLDVT) 2009, San Francisco, CA. November 4-6, 2009, pp 60-67.

Invited Paper "*Noise-based logic",* Kish, Khatri, Bezrukov, Gingl, *Sethuraman*. International Workshop on Natural Computing (IWNC) 2009, Himeji, Japan. September 23-25, 2009. Published by Springer, Eds. F. Peper et al., IWNC 2009, PICT 2, 2010, pp 13–22.

"3D Simulation and Analysis of the Radiation Tolerance of Voltage Scaled Digital Circuits", Garg, Khatri. IEEE International Test Synthesis Workshop 2009, Austin, TX. March 23-25, 2009, pp 498-504.

"Fault Table Generation Using Graphics Processing Units", Gulati, Khatri. IEEE International Test Synthesis Workshop 2009, Austin, TX. March 23-25, 2009, pp 60-67. **Received best student paper award.**

"A Robust Pulse-triggered Flip-flop and an Enhanced Scan Cell Design", Soni, Kumar, Khatri. IEEE International Test Synthesis Workshop 2009, Austin, TX. March 23-25, 2009, pp 97-102.

"3D Simulation and Analysis of the Radiation Tolerance of Voltage Scaled Digital Circuits", Garg, Khatri. 2009 IEEE Workshop on Silicon Errors in Logic - System Effects (SELSE) 2009, Stanford, CA. March 24-25, 2009.

"*A Modified Scan-D Flip-flop Design to Reduce Test Power*", Ganesan, Khatri. 15th IEEE/TTTC International Test Synthesis Workshop (ITSW) 2008, Santa Barbara, CA. April 7-9, 2008.

"*Forbidden Transition Free Crosstalk Avoidance CODEC Design*", Duan, Khatri. ACM/IEEE International Workshop on Timing Issues in the Specification and Synthesis of Digital Systems (TAU), Monterey, CA. February 25-26, 2008, pp 44-49.

"*A Fast, Analytical Estimator for the SEU-induced Pulse Width in Combinational Designs*", Garg, Nagpal, Khatri. ACM/IEEE International Workshop on Timing Issues in the Specification and Synthesis of Digital Systems (TAU), Monterey, CA. February 25-26, 2008, pp 128-133.

"*Clock Distribution Scheme using Coplanar Transmission Lines*", Cordero, Khatri. ACM/IEEE International Workshop on Timing Issues in the Specification and Synthesis of Digital Systems (TAU), Monterey, CA. February 25-26, 2008, pp 56-61.

"*Efficient MRF-based Noise-immune Sub-threshold Logic Circuit Design*", Nagpal, Garg, Khatri.

MOSAID Technologies Inc., Exhibit 2026
Page 2026 - 58
IPR2025-01487, Infineon Technologies Americas Corp. v. MOSAID Technologies Inc.

International Workshop on Logic and Synthesis (IWLS) 2007, San Diego, CA. May 30 - June 1, 2007, pp 99-105.

"*Design of a Parallel-Prefix Adder Architecture with Efficient Timing-Area Tradeoff Characteristic*", Das, Khatri. International Workshop on Logic and Synthesis (IWLS) 2007, San Diego, CA. May 30 - June 1, 2007, pp 144-149.

"*Timing-Driven Synthesis for Fast Barrel Shifters*", Das, Khatri. International Workshop on Logic and Synthesis (IWLS) 2007, San Diego, CA. May 30 - June 1, 2007, pp 158-163.

"*A Hardware Approach for Approximate, Efficient Logarithm and Antilogarithm Computations*", Paul, Jayakumar, Khatri. International Workshop on Logic and Synthesis (IWLS) 2007, San Diego, CA. May 30 - June 1, 2007, pp 260-265.

"*A Robust Window-based Multi-node Minimization Technique using Boolean Relations*", Cobb, Gulati, Khatri. International Workshop on Logic and Synthesis (IWLS) 2007, San Diego, CA. May 30 - June 1, 2007, pp 266-273.

"*Toggle Equivalence Preserving (TEP) Logic Optimization*", Goldberg, Gulati, Khatri. International Workshop on Logic and Synthesis (IWLS) 2007, San Diego, CA. May 30 - June 1, 2007, pp 380-387.

"*Gate-based Buffering of PTL Logic using Don't Cares*", Garg, Khatri. International Workshop on Logic & Synthesis (IWLS) 2006, Vail, CO. June 7-9, 2006, pp 23-30.

"*A Highly Testable Pass Transistor Based Design Methodology*", Gulati, Jayakumar, Khatri. IEEE International Test Synthesis Workshop (ITSW) 2006, Santa Barbara, CA. April 9-12, 2006.

"*A PLA based Asynchronous Micropipelining Approach for Subthreshold Circuit Design*", Jayakumar, Garg, Gamache, Khatri. ACM/IEEE International Workshop on Timing Issues in the Specification and Synthesis of Digital Systems (TAU) 2006, San Jose, CA. February 27-28, 2006, pp 419-424.

"*Memory-based Cross-talk Canceling CODECs for On-chip Buses*", Duan, Gulati, Khatri. International Workshop on Logic Synthesis (IWLS) 2005, June 8-10, Lake Arrowhead, CA. June 8-10, 2005, pp 117-123.

"*An Iterative Technique for Improved Two-level Logic Minimization*", Shenoy, Saluja, Khatri. International Workshop on Logic Synthesis, June 2004, pp 119-126.

Invited paper *"A Routing Technique for Structured Designs which Exploits Regularity*". Khatri, Das. VLSI Design and Test Workshop (VDAT-2001), August 2001.

"Don't Care Wires in Logical/Physical Design"- *Chong*, *Jiang*, Khatri, *Sinha*, Brayton. IWLS-2000.

"SPFD-based Wire Removal in a Network of PLAs"- Khatri, *Sinha*, Kuehlmann, Brayton, Sangiovanni-Vincentelli. International Workshop on Logic Synthesis, Tahoe City, CA. May 1999.

U.S. Patents:

U.S. Patent 12057831: *"Threshold logic gates using flash transistors"*, Vrudhula, Khatri. Issued August 2024

MOSAID Technologies Inc., Exhibit 2026
Page 2026 - 59
IPR2025-01487, Infineon Technologies Americas Corp. v. MOSAID Technologies Inc.

U.S. Patent 7880505:*"Low Power Reconfigurable Circuits with Delay Compensation"*, Khatri, Vaidya, Griffin, Jayakumar. Issued February 2011.

U.S. Patent 06598215: *"Datapath Design Methodology and Routing Apparatus".* Das, Khatri. Issued July 2003.

U.S. Patent 06156579: "*Circuit Identifier for use with Focused Ion Beam Equipment*." Khatri, Eisele. Issued December 2000.

U.S. Patent 05448182: "*Driver Circuit with Self-adjusting Impedance Matching.*" Countryman, Khatri. Issued September 1995.

U.S. Patent 05408131: "*Circuit Identifier for use with Focused Ion Beam Equipment*." Khatri, Eisele. Issued April 1995.

U.S. Patent 05347523: "*Data processing system having serial self address decoding and method of operation*." Khatri, Bruce, Moyer. Issued September 1994.

Teaching Experience

A summary of my teaching at Texas A&M is shown in the table below. For each course taught, the average (over all 8 categories) student evaluation ratings (out of 5) are listed, along with the course enrolment in parentheses. My graduate courses are offered through the distance education program as well.

	EE248	EE454	EE449	EE749	EE689 (logic) EE699	EE689 (circuits) EE752	EE689 (Scalable Distrib. Consensus)	EE689 (Quantum & Logic Synthesis)
F04	4.36 (29)							
S05					4.50 (9)			
F05						4.65 (18)		
S06		4.62 (47)						
F06	4.23 (47)				4.33 (22)			
S07						4.44 (12)		
F07			4.68 (34)		4.32 (20)			
S08			4.05 (39)					
F08			4.67 (14)			4.27 (16)		
S09			4.38 (16)					
F09	4.37 (46)				4.52 (6)			
S10			4.54 (24)					
S11			4.66 (29)					

MOSAID Technologies Inc., Exhibit 2026
Page 2026 - 60
IPR2025-01487, Infineon Technologies Americas Corp. v. MOSAID Technologies Inc.

	EE248	EE454	EE449	EE749	EE689 (logic) EE699	EE689 (circuits) EE752	EE689 (Scalable Distrib. Consensus)	EE689 (Quantum & Logic Synthesis)
F12			4.55 (19)			4.65 (12)		
S13			4.45 (46)		4.19 (12)			
F13			4.73 (55)					
S14			4.45 (59)					
F14			4.42 (70)					
S15			4.53 (61)					
F15			4.42 (53)	4.64 (14)				
S16			4.66 (35)					
S16				4.74 (40)	4.74 (14)			
F17			4.29 (20)	4.30 (25)				
S18			4.09 (58)	4.30 (13)	4.20 (17)			
F18			3.78 (60)	4.78 (20)				
S19			4.07 (72)	4.27 (36)				
F20			4.40 (57)	4.42 (9)				
S21			4.68 (122)	4.64 (12)				
F21			4.08** (51)	4.28** (30)				
S22			TBD (48)	TBD (21)			TBD (9)	
F22								TBD (28)
S23			TBD (59)	TBD (24)			TBD (5)	
F23			TBD (55)	TBD (29)				
S24			TBD (66)	TBD (22)				TBD (7)
F24			TBD (54)	TBD (34)		TBD (25)		

**** This data has missing entries in AEFIS (the PDF export and Excel export data do not agree and answers to several questions are missing). I have used information that is available, but do not use this data to compute averages due to the unreliability of the data.**

Texas A&M University, College Station (Fall 2025 - Spring 2026). I plan to develop a new graduate course on chiplet based design. This course will be first offered in Fall 2026.

Texas A&M University, College Station (Fall 2024). I modified my graduate course (ECEN 752) to include a substantial coverage of flash transistors, and flash-based accelerators of various special functions. The modified version of this course was first offered in Fall 2024.

MOSAID Technologies Inc., Exhibit 2026
Page 2026 - 61
IPR2025-01487, Infineon Technologies Americas Corp. v. MOSAID Technologies Inc.

Texas A&M University, College Station (Summer 2023). I revised all labs and lab manuals for ECEN 449 and ECEN 248, to be compatible with a newer version of the Xilinx FPGA software.

Texas A&M University, College Station (Fall 2022). I developed a new graduate elective course (ECEN 689) titled "Quantum and Logic Synthesis". This course covers quantum logic synthesis, and its connection with traditional logic synthesis. It was first offered in Fall 2022.

Texas A&M University, College Station (Spring 2022). I developed a new graduate elective course (ECEN 689) titled "Scalable Distributed Consensus". This course covers the mathematics of scalable cryptocurrency, and was first offered in Spring 2022.

Texas A&M University, College Station (Summer 2020). I redesigned all the labs for ECEN 248 (Digital Systems Design) and ECEN 449/749 (Microprocessor Systems Design) to be completely conducted without the need of a laboratory, in response to the pandemic. These modified labs can be used to create a distance ECE degree program, if need be.

Texas A&M University, College Station (Summer 2019). I redesigned all the labs for ENGR 217/PHYS 217 (Experimental Physics and Engineering Lab III – Electricity and Magnetism) redoing all lab manuals in the process.

Texas A&M University, College Station (Summer 2018). I am converting all the labs for ECEN 449 (Microprocessor Systems Design) and ECEN 248 (Digital Systems Design) to the Digilent Zybo Z7 FPGA board and redoing all lab manuals in the process.

Texas A&M University, College Station (Fall 2016 / Spring 2017). I converted all the labs for ECEN 449 (Microprocessor Systems Design) and ECEN 248 (Digital Systems Design) from the Xilinx ISE software to the Xilinx Vivado software, and from the Virtex hardware to the Kintex hardware, redoing all lab manuals in the process

Texas A&M University, College Station (Fall 2014). I am working on converting the laboratory exercises of two courses, ECEN 248 (Digital Systems Design) and ECEN 449 (Microprocessor Systems Design) to a mobile laboratory station environment, using mobile test equipment from National Instruments and Xilinx Inc.

Texas A&M University, College Station (Spring 2014). I have been working on developing a new undergraduate 2-semester course. In this course, students will design, synthesize, simulate, place, route, and tape out a digital Integrated Circuit (IC) in the first semester. This IC will be fabricated and the second semester of the course will involve testing and debugging the fabricated IC. The course will be a senior-level elective course. The knowledge and skills that the students will learn through this course will make them very attractive hires for the IC industry in Texas and the United States.

Texas A&M University, College Station (Spring 2014). I have obtained permission from the Department Head of the ECE Department to initiate a course (a pass/fail, 1 credit course for sophomores or seniors) in which I will discuss career issues. The course will cover life lessons that are important for a healthy career, including life-long learning, networking, people skills, career choices and self-improvement. The lectures will be augmented by visits from industry leaders who will be able to share their career lessons with the students. This course is under development, and will be submitted for approval in Fall 2014.

Texas A&M University, College Station (Summer 2013). I have begun converting all the lectures of ECEN 248 (Digital Systems Design) and ECEN 449 (Microprocessor Systems Design) into video lectures, to be posted online for students to use as a reference resource.

MOSAID Technologies Inc., Exhibit 2026
Page 2026 - 62
IPR2025-01487, Infineon Technologies Americas Corp. v. MOSAID Technologies Inc.

Texas A&M University, College Station (Summer 2011). Along with Dr. Choi, I helped migrate the ECEN 248 Laboratories exercises to a Linux platform instead of a Windows platform, and update the laboratory manuals accordingly.

Texas A&M University, College Station (Fall 2009). In Fall 2009, I was awarded the "*Association of Former Students' Distinguished Achievement Award in Teaching*".

Texas A&M University, College Station (Summer 2008). Along with Dr. Choi, I redesigned the laboratory portion of ECEN 248 (Digital Systems Design). The laboratories of ECEN 248 were aging, hence the decision to redo them. The new exercises are designed to be more relevant to current-day design styles. New laboratory manuals were written as well.

Texas A&M University, College Station (Fall 2007, Spring 2008, Fall 2008, Spring 2009, Spring 2010, Spring 2011, Fall 2012, Spring 2013, Fall 2013, Spring 2014, Fall 2014, Spring 2015, Fall 2015, Spring 2016). In Fall 2007, I co-taught a course (ELEN 449 – Microprocessor System Design), which is a laboratory oriented course that covers digital VLSI design using reconfigurable hardware and software. Along with Dr. Reddy, in Summer 2007, I overhauled the lectures and the laboratories in Summer 2007, and developed the new course, which uses an FPGA board based on a hardware/software co-design toolkit. This made the ECEN 449 course in step with the design technologies and approaches used in industry today. From Spring 2008 onwards, I taught this course alone. I visited TAMU-Q in January 2008 to demonstrate the new labs to the faculty and laboratory coordinators.

Texas A&M University, College Station (Fall 2015, Spring 2016). I taught a course (ECEN 749 – Microprocessor System Design), which is a laboratory oriented course that covers digital VLSI design using reconfigurable hardware and software. This is a graduate version of ECEN 449, with additional tasks required for graduate credit.

Texas A&M University, College Station (Spring 2006). I taught a course (ELEN 454 – Digital Circuit Design), which covers digital VLSI design including MOSFETs, static and dynamic characteristics of CMOS circuits, interconnect modeling, memory design, etc.

Texas A&M University, College Station (Fall 2004, Fall 2006, Fall 2009). Taught a course (ELEN 248 - Introduction to Digital Systems Design) which is a sophomore-level course in switching theory and finite state machine design.

Texas A&M University, College Station (Fall 2005, Spring 2007, Fall 2008, Fall 2012). I taught a course (ELEN 689 – VLSI Circuit Design), which is similar in content to the ECEN 6003 course taught by me at the University of Colorado, Boulder.

Texas A&M University, College Station (Spring 2005, Fall 2006, Fall 2007, Fall 2009, Spring 2013, Spring 2016). I taught a course (ELEN 689 - VLSI Logic Synthesis), which covered two-level and multi-level logic synthesis and sequential logic synthesis. The course was renamed ECEN 699 before I taught it in Spring 2013.

University of Colorado, Boulder (Spring 2004). Taught a newly developed course (ECEN 6009 - Research Problems in VLSI) which consists of research readings in nano-electronics, embedded and real-time systems, and quantum computing. The course had a strong research focus. This course did not exist in the ECE curriculum prior to this semester. The enrolment for this course was 16.

University of Colorado, Boulder (Fall 2002/2003). Developed a new graduate class (ECEN 6013 - Computer-Aided Design Techniques for VLSI). This class covered circuit-level, switch-level, and logic-level simulation techniques, in addition to physical design topics like circuit partitioning, wave pipelining, and detailed routing for random logic as well as datapath circuits. The topics covered in

MOSAID Technologies Inc., Exhibit 2026
Page 2026 - 63
IPR2025-01487, Infineon Technologies Americas Corp. v. MOSAID Technologies Inc.

this class did not exist in the ECE curriculum earlier. The focus of the class was research-centric, and the class had a research project in lieu of a final exam, to encourage students to perform research. This 3-unit course had an enrolment of 23 students (2002) and 16 students (2003).

University of Colorado, Boulder (Fall 2000/2001, Summer 2001/2002/2003). Developed a new graduate class (ECEN 6003 – Digital Circuit Design). The class covered design techniques applicable in a custom Deep Sub-micron VLSI design setting. The topics covered in this class did not exist in the ECE graduate curriculum earlier. The class had a research project in lieu of a final. This 3 unit course had an enrolment of 33 (10 via CATECS) in 2000, and 28 (11 via CATECS) in 2001. I also offered it via the CATECS tape library in Summer 2001 (1 student) and Summer 2002 (4 students) and Summer 2003 (10 students).

University of Colorado, Boulder (Spring 2000/2001/2003). Taught a graduate course (ECEN 6139 – VLSI Logic Synthesis). The course was significantly re-designed with respect to an existing course by the same name, with increased emphasis on VLSI design techniques that drive corresponding logic synthesis algorithms. Heavy emphasis on theory as well as practical applications of the topics being taught. The course had a research project in lieu of a final exam. This 3-unit course had an enrolment of 8 in 2000, 11 in 2001, and 22 in 2003.

University of Colorado, Boulder (Spring 2001/2002/2003). Taught a senior course (ECEN 4703 – Switching and Finite Automata Theory) on fundamentals of switching theory, two-level and multi-level logic optimization, and finite automata theory. This 3 unit course had an enrolment of 55 in 2001, 48 in 2002 and 41 in 2003. ***Course ratings (FCQs) for this course in Spring 2003 were the highest in a decade.***

Independent Study courses supervised for several TAMU and CU students: Individual students and dates not listed. The total would be approximately 100 students.

Informally advised a large number of ECE graduate (>35) and undergraduate (>120) students). I enjoy helping students with discussions on career choices, senior project selection, and by providing general guidance.

Xilinx Corporation, Santa Clara, CA (Summer 2000/2001/2002). Class on the VHDL (Verilog in 2001) hardware design language to employees of Xilinx Corporation in Colorado and California. This 11-week class emphasized practical HDL development and debugging. Each of these classes was attended by about 20 designers.

University of California, Berkeley (Spring 1998). Graduate Student Instructor for Professor Brayton's Logic Synthesis class, EECS 219B. The class is an advanced graduate-level class dealing with two-level and multi-level logic synthesis and optimization techniques.

University of California, Berkeley (1993-99). Held numerous seminars and presentations as part of weekly verification and logic synthesis seminar series, as well as class project presentations.

Motorola, Inc., Austin, TX (1989-93). Delivered numerous presentations as part of my role as Design for Testability (DFT) coordinator for the MC88110 design team. In addition, I performed several one-on-one DFT education sessions for interested design engineers.

Indian Institute of Technology, Kanpur, India. (1986-87). Conducted tutorial classes in basic electronics and electrical engineering subjects, intended to help sophomores. These were attended by approximately 75 students.

MOSAID Technologies Inc., Exhibit 2026
Page 2026 - 64
IPR2025-01487, Infineon Technologies Americas Corp. v. MOSAID Technologies Inc.

Supervision of Students.

Current Ph.D. / M.S. / B.S. Students (Ph.D. listed first, then M.S., then B.S.)

Kyler Scott, Ph.D. student. Kyler is working with me on his PhD in the area of flash-based circuits for efficient implementation of neural networks. Kyler obtained his BS and MS degrees from Texas A&M University. Kyler's MS thesis was supervised by me.

Cheng-yen Lee, Ph.D. student. Cheng-yen is working with me on his PhD in the area of flash-based analog circuits as well as a fast hardware-assisted nonlinear optimization engine. Cheng-yen has his BS and MS degree from National Chiao Tung University (NCTU) in Hzinchu, Taiwan.

Pranay Kumar Eedara, Ph.D. student. Pranay is working with me on his PhD in the area of applying VLSI CAD algorithms to the problem of drone routing. Pranay has his MS from Texas A&M University, and his BS from IIT Bhubaneshwar, India. Pranay is a ECE fellowship recipient.

Shao-Wei Chu, Ph.D. student. Shao-Wei will be joining my group in Fall 2022. Shao-Wei will be working on logic synthesis techniques for VLSI security, and also blockchain. Shao-Wei is an ECE fellowship recipient and has received his MS degree from National Taiwan University, Taipei.

Alamera Nouran Nader Alquennah, PhD. Student. Alamera is working with me (and Ali Ghrayeb at TAMUQ), on her PhD in machine learning techniques to predict degradation of power grid equipment. Alamera received her BS and MS degrees in Electrical Engineering from Kywait University.

Gautham Nemani, M.S. Student. Gautham is working with me on his MS in the area of arithmetics. Gautham received his BS degree from the Indian Institute of Technology, Tirupathi, in 2022.

Graduated Ph.D. / M.S. Students (Ph.D. listed first):

Mohammad AlShaikh Saleh, Ph.D. student. Mohammad worked with me (and Ali Ghrayeb at TAMUQ), on computational and machine learning techniques to enhance power grid reliability and stability. Mohammad has a Masters degree from TU Munich (Germany) and a BS degree from The University of Applied Sciences Upper Austria. Mohammad successfully defended his Ph.D. in Spring 2025.

He Zhou, Ph.D. candidate. He is working on her Ph.D. degree in ECE, in the area of accelerating computations in genomics and classification using FPGA and GPU platforms. He is being co-advised by Dr. Jiang Hu (ECE, TAMU) as well as me. He obtained her BS degree from X'ian Jiaotong University in China in 2013, and has been pursuing her graduate work at Texas A&M since 2013. He defended her thesis in Summer 2019.

Abbas Fairouz, Ph.D. candidate. Abbas obtained his Ph.D. degree in the areas of VLSI design and design automation. Abbas received his B.S. and M.S. in Computer Engineering from Kuwait University, and his Ph.D. research is supported by the Kuwait Government. Abbas completed his PhD in Summer 2019.

Monther Abusultan, Ph.D. candidate. Monther completed his Ph.D. degree in Fall 2016. His research included techniques to use floating-gate transistors for digital circuit designs. Monther has his B.S. and M.S. degrees from Montana State University, Bozeman, MT. Monther is currently with Intel Corporation in Hillsboro, OR.

MOSAID Technologies Inc., Exhibit 2026
Page 2026 - 65
IPR2025-01487, Infineon Technologies Americas Corp. v. MOSAID Technologies Inc.

Kun Bian, Ph.D. Student. Kun obtained his Ph.D. in Fall 2013, in the area of using Boolean Satisfiability techniques to speed up delay testing. Kun was a CSE student, primarily advised by Dr. Hank Walker. I served as his co-advisor. Kun has a B.S. from Tsinghua University (China), and an M.S. from Stanford University and Rensslaer Polytechnic Institute. Kun is currently with Broadcom, Inc.

Kent Lin, Ph.D. Student. Kent defended his Ph.D. in Spring 2013, and worked on his Ph.D. with my group since Spring 2009 in the areas of GPU based extraction of the Gene Regulatory Network for cancer, and on cryptographic key generator circuits. Kent received his B.S. degree from UC Berkeley, and his M.S. degree from Yale University. Kent is currently with Synopsys, Inc.

Ayan Mandal, Ph.D. Student. Ayan obtained his Ph.D. in Spring 2013, and has been working in my group since Spring 2010, in the areas of Network-on-Chip (NoC) architectures based on a resonant clock based source-synchronous paradigm, and on low-jitter clock distribution networks. Ayan received his B.S. degree from IIT Kharagpur, India. Ayan was co-advised by Prof. Rabi Mahapatra (CSE, TAMU), although I was Ayan's primary Ph.D. thesis advisor. Ayan is currently with Intel Corporation, in Bangalore, India.

Kanupriya Gulati, Ph.D. Student. Kanupriya's Ph.D. research was in the area of VLSI-CAD algorithm acceleration using FPGAs and GPUs. Kanupriya graduated in Fall 2009. Kanupriya has a B.S. from the Delhi College of Engineering in India, and her M.S. from Texas A&M University (from my group). She received the *NVIDIA fellowship* ($25,000) for the 2008-9 academic years. Kanupriya worked at Intel Corporation's Strategic CAD Laboratory (SCL) in Hillsboro, OR, after graduation, and is currently pursuing her MBA degree from Harvard University.

Rajesh Garg, Ph.D. student. Rajesh's Ph.D. research was in the area resilient circuit design (including radiation tolerant circuit design and variation tolerant circuit design/analysis). In addition, Rajesh has publications in the areas of Pass Transistor Logic based VLSI circuit design, statistical sensitizable timing analysis in VLSI, extreme low power transceiver design, fabric based circuit design and flip-flop design. Rajesh successfully defended his Ph.D. in Spring 2009. Rajesh has a B.S. from IIT Delhi, and a M.S. from Texas A&M University (from my group). Rajesh began full-time employment at Intel Corporation in Hillsboro, OR starting April 2009.

Chunjie Duan, Ph.D. student. Chunjie worked with me on encoding techniques to avoid cross-talk in on-chip VLSI buses and VDD-scaling approaches for Embedded Real-time Systems. Chunjie passed his Ph.D. preliminary examination in Spring 2002, and his Ph.D. comprehensive exam in Fall 2007. He defended his Ph.D. thesis in Spring 2008. Chunjie is employed at the Mitsubishi Electric Research Laboratory (MERL) in Cambridge, MA.

Sabyasachi Das, Ph.D. student. Sabyasachi's dissertation was in the area of datapath design automation techniques. Sabyasachi passed his Ph.D. preliminary examination in Spring 2001, his comprehensive exam in Spring 2007 and his dissertation in Fall 2007. Sabyasachi is currently with Xilinx, Inc. in Silicon Valley.

Nikhil Jayakumar, Ph.D. student. Nikhil worked with me on leakage current reduction in VLSI design, extreme low power circuit design approaches, and VLSI implementation of LDPC codes. Nikhil passed his Ph.D. preliminary examination in Spring 2003 and defended his Ph.D. in Fall 2007. Nikhil is currently with a stealth-mode startup in San Jose, CA.

Brock LaMeres, Ph.D. student. Brock's research involved efficient board-level I/O design methodologies, including inductive cross-talk reduction using hardware and software approaches. Brock passed his Ph.D. preliminary examination in Spring 2004, and defended his Ph.D. thesis in October 2005. Brock is currently an Associate Professor at Montana State University.

MOSAID Technologies Inc., Exhibit 2026
Page 2026 - 66
IPR2025-01487, Infineon Technologies Americas Corp. v. MOSAID Technologies Inc.

Kushagra Gupta, M.S. Student. Kushagra obtained his M.S. with me in the area of a light-weight cloud based computing architecture. Kushagra has a BS degree from Motilal Nehru National Institute of Technology, Allahabad, India.

Kyler Scott, M.S. student. Kyler obtained his MS degree in Spring 2022, in the area of flash-based Digital to Analog Converters (DACs). Kyler obtained his BS from Texas A&M University.

Joellen Lansford, M.S. Student. Joellen worked with me in the area of a embedded system implementation of a secure 2-party (and a 3-party) communication protocol. Joellen joined Texas A&M on a scholarship from Los Alamos National Laboratories. Joellen graduated in Spring 2021.

Andrew Douglass, MS candidate. Andrew completed his BS Honors thesis with me in Spring 2017. His research topic was a fast resonant ring-based data delivery fabric for next-generation 3D stacked memory designs. He graduated with his MS degree in Spring 2019.

Harsh Kumar, M.S. candidate. Harsh has been working with me on his M.S. degree since Spring 2015, and defended in Fall 2016, in the area of searchable compression of textual data. Harsh obtained his BS in Electronics in 2011, and then worked as a software developer until July 2014. Harsh is currently with Intel Corporation.

Kinshuk Sharma, M.S. student. Kinshuk has been working on his M.S. degree with me since Spring 2015, and defended in Summer 2016, in the area of on-chip synchronizers to communicate signals between different clock domains. Kinshuk obtained his BS degree in Electrical Engineering from the Indian Institute of Technology, Rourkee in 2013.

Amr Elshennawy, M.S. student. Amr started on his M.S. degree in Fall 2011, and defended in Fall 2014. His research interests include GPU based implementations of algorithms (Boolean Satisfiability, radiation transport), and radiation detection circuits. Amr obtained his B.S. from Cairo University in Egypt in 2009, and worked as a software engineer (at IBM, Mentor Graphics and Cerner Corp.) between 2009 and 2011. Amr is currently with Intel Corporation in Hillsboro OR.

Luke Murray, M.S. candidate. Luke started with me on his M.S. degree since Fall 2013, and finished in Fall 2014. Luke has a B.S. from the ECE Department at Texas A&M University, and his research topic covers circuit approaches to sample the on-chip power grid for efficient chip diagnostics. Luke is currently with IBM Corporation in Austin, TX

Rajeev Kumar, M.S. Student. Rajeev obtained his M.S. degree in Spring 2013. His research was on fast FFT and DFT computations using Sum-of-Product (SOP) based architectures. Rajeev has his undergraduate degree from IIT Guwahati in India, in 2007. Rajeev worked at ARM from 2007 to 2010. Rajeev is currently with Broadcom, Inc.

Subramanian Poothamkurissi, M.S. Student. Subramanian obtained his M.S. degree in Fall 2012. His research consisted of partitioning RTL netlists for FPGA based emulation. Subramanian has his B.S. degree from NIT Trichy in India. Subramanian is currently with Apple, Inc.

Rajesh Kumar, M.S. Student. Rajesh obtained his M.S. degree in Summer 2010. His thesis was on radiation tolerant VLSI IC design. Rajesh obtained his B.S. from IIT Roorkee, and has 2 years experience with ST Microelectronics. Rajesh is currently working at Qualcomm, Inc.

Vinay Karkala, M.S. Student. Vinay obtained his M.S. degree in Summer 2010. His thesis was on resonant clocks in VLSI designs. Vinay obtained his B.S. from IIT Madras, India, and has 1 year experience with Cypress Semiconductor. Vinay is currently with Qualcomm, Inc.

MOSAID Technologies Inc., Exhibit 2026
Page 2026 - 67
IPR2025-01487, Infineon Technologies Americas Corp. v. MOSAID Technologies Inc.

Kalyana Bollapalli, M.S. Student. Kalyana's M.S. thesis was in the area of IP routing table compression using Logic Synthesis techniques. Kalyana also worked in the area of hardware acceleration of the logic tautology problem, MIMO decoding on a GPU platform, noise based logic realization, network coding for unicast wiring in VLSI, and low leakage memory design. Kalyana has a B.Tech degree from IIT Bombay in India. Kalyana is currently with NVIDIA Corporation in San Jose, CA.

Charu Nagpal, M.S. Student. Charu's work was in the area of radiation tolerant circuit design, as well as approaches to design circuits in the presence of noisy components. Charu graduated in May 2008 and works in the Atom group of Intel Corporation, in Austin, TX.

Jeff Cobb, M.S. student. Jeff's research was in the area of Logic Synthesis for VLSI, including novel Boolean multi-node minimization techniques. Jeff is currently with Apple, Inc.

Suganth Paul, M.S. Student. Suganth's research was in the area of subthreshold IC design, efficient arithmetic circuit implementation, and hardware approaches to accelerate VLSI algorithms. Suganth graduated in December 2007, and is now with the Atom group in Intel Corporation in Austin, TX.

Ekambavanan Sasidharan, M.S. Student. Sasidharan's research was in the area of energy-delay product minimization in serial data transmission, as well as energy minimization in parallel buses. Sasidharan graduated in May 2007, and is currently with LinkaMedia in Silicon Valley.

Rajesh Garg, M.S. student. Rajesh defended his M.S. under my supervision in Spring 2006, and worked with me on his Ph.D. since. He completed his Ph.D. requirements in Spring 2009.

Kanupriya Gulati, M.S. student. Kanupriya defended her M.S. under my supervision in Spring 2006, and subsequently worked with me on her Ph.D. thesis.

Karandeep Singh, M.S. student. Karandeep's research was in the area of Don't Care enhanced technology mapping for VLSI, exploitation of battery recovery effects in scheduling computation for mobile applications, and timing optimization of VLSI circuits. Karandeep graduated in May 2007, and is currently with Texas Instruments in Houston, TX.

Undergraduate Students (B.S. Honors Thesis and Senior Project students listed first):

Zach Assad, BS Senior Design student. Zach is working with me on his senior design project on flash-based key-value stores. He will graduate in 2025.

Brayden Vargas-Calderon, BS Senior Design student. Brayden is working with me on his senior design project on wireless power delivery (combined with communication). He will graduate in 2024.

Thomas Dexter, BS Senior Design student. Thomas is working with me on his senior design project on the design and validation of a new cryptographic hash function. He will graduate in Spring 2023.

Conner Wallis, BS Senior Design student. Conner worked with me on his senior design project on the testing of a alpha particle detecting IC which we had developed in my lab a few years ago. He graduated in Fall 2021.

Daniel Schwartz, BS Honors student. Under my supervision, Daniel completen his BS Honors thesis in the area of a disk-less cloud-based computing system in Spring 2020.

MOSAID Technologies Inc., Exhibit 2026
Page 2026 - 68
IPR2025-01487, Infineon Technologies Americas Corp. v. MOSAID Technologies Inc.

Hung Bui, BS Honors student. Under my supervision, Hung completed his BS Honors thesis in the area of a disk-less cloud-based computing system in Spring 2020.

Kyler Scott, BS Senior Project student. Kyler is working with me on his BS senior project in the area of multi-port readable memories, using a single physical port. Kyler is expected to graduate in Fall 2019

Matthew Skolaut, BS candidate. Matthew is working with me on his capstone project in the area of wireless (infrared) data and power delivery for portable and hand-held electronics. Matthew is expected to graduate in Fall 2019

Jacob Sacco, BS Honors thesis candidate. Jacob is working with me on his BS Honors thesis in the area of FPGA based implementation of efficient machine learning engines. Jacob is expected to graduate in Spring 2019.

Joseph Harris, BS Honors thesis candidate. Joseph is working with me on his BS Honors thesis in the area of wireless (infrared) data and power delivery for portable and hand-held electronics. Joseph is expected to graduate in Spring 2019.

Ryan Bailey, BS Honors thesis candidate. Ryan is working with me on his BS Honors thesis in the area of fast ring-based data transfer fabrics to implement a reservation station in a modern microprocessor. Ryan graduated in Fall 2018.

Andrew Douglass, B.S. Honors Thesis. Andrew completed his BS Honors thesis with me in Spring 2017. His research topic was a fast resonant ring-based data delivery fabric for next-generation 3D stacked memory designs.

Kyle Loyka, B.S. Honors Thesis. Kyle has been working with me on research in sleep apnea since Summer 2016, under the auspices of the NSF REU program. Kyle completed his BS Honors thesis with me in Spring 2017. His research topic was an efficient homomorphic encryption technique based on affine transforms.

Michael Bass, Honors B.S. Thesis. Mike obtained his Honors thesis in Spring 2015, on the area of a combined language for synthesis of hardware as well as software. He is also working on a radiation detection multi-channel analyzer (MCA) with me. Mike obtained his BS degree from the ECE department at Texas A&M in Spring 2015.

John Leslie, Honors B.S. Thesis. John obtained his Honors thesis in Spring 2015, in the area of hardware engines for enhanced credit card security using physically unclonable functions. John obtained his BS degree from the ECE department at Texas A&M in Spring 2015.

Shayok Dutta, Honors B.S. Thesis. Shayok obtained n his Honors thesis in Spring 2015, in the area of hardware engines for enhanced credit card security using physically unclonable functions. Shayok obtained his BS degree from the ECE department at Texas A&M in Spring 2015.

Amnay Amimeur, Honors B.S. Thesis. Amnay obtained his Honors thesis in Spring 2015, in the area of hardware engines for enhanced credit card security using physically unclonable functions. Amnay obtained his BS degree from the ECE department at Texas A&M in Spring 2015.

Salman Gopalani, Honors B.S. Thesis. Salman successfully graduated in May 2007, while working on an undergraduate Honors thesis with me. His thesis was on the topic of NAND2 gate based structured ASIC design approaches. This thesis was obtained under the auspices of the Honors Thesis program at TAMU. Salman is currently with National Instruments in Austin, TX.

MOSAID Technologies Inc., Exhibit 2026
Page 2026 - 69
IPR2025-01487, Infineon Technologies Americas Corp. v. MOSAID Technologies Inc.

Advised an undergraduate student (**John Pickering**) in Spring 2016. John worked on circuit modeling of ambipolar devices using HSPICE.

Jordan Taylor, B.S. candidate. Jordan has been working with me on research in infrared light based communication since Fall 2014. Jordan joined Texas A&M in Fall 2014, and is expected to complete his B.S. degree in Fall 2018.

Dakota Plesa, B.S. candidate. Dakota has been working with me on research in the area of secure erasure of flash-based memory (SSDs, memory sticks) using beta radiation since Spring 2015. Dakota joined Texas A&M in Fall 2014, and is expected to graduate with his B.S. degree in Fall 2018.

Michael Bartling, B.S. candidate. Michael worked with me on a project to solve the Boolean Satisfiability (SAT) problem using a map-reduce algorithm running on Texas A&M's Supercomputing cluster. By partitioning the SAT problem, we attempted to obtain a significant speedup for this very important problem.

Matthew Romero. I advised Matthew during Summer 2013. Matthew worked on a semester-long study of different kinds of memory technologies that are on the horizon, comparing and contrasting them with existing memory technologies in terms of speed, power consumption, reliability, and volatility.

Ahmed Elsherif, Kirk Lundblade. Advised these two USRG students in the Summer of 2011.

Nick Barnes, Alex Ivanov and Bradley Johnson. I advised these students in Summer 2010, under the NSF REU and USRG programs. The work conducted by Alex and Bradley involved designing an FPGA based shared cryptographic key generator using resistors, and was accepted at the IEEE International Conference on Computer Design (ICCD) 2011.

Joseph Wanstrath and Travis LaCour. I advised these students during Summer 2009, under the NSF Research Experience for Undergraduates (REU) program. Joseph and Travis' work involved building a Sum-of-Products based Multiple Constant Multiplication (MCM) algorithm for Fast Fourier Transform (FFT) applications. Their work was accepted at ICCAD 2010, and an extended version of this work has been submitted to the ACM Transactions on Design Automation of Electronic Systems (TODAES).

Gordon Burgett, Joseph Duperre and Jacob Bachmeyer. I advised these students during Summer 2008, under the NSF Research Experience for Undergraduates (REU) program. Gordon and Joseph won the first and second prizes for their REU work at TAMU, which involved the design of a RF transmitter (to be carried on the back of a roach) and receiver. A paper based on this effort was accepted at the IEEE Midwest Symposium on Circuits and Systems (MWSCAS) 2009.

Prince Varghese and Brandon Buscher. I advised these students during Summer 2007, under the NSF Research Experience for Undergraduates (REU) program.

Mario Sanchez, Anshul Gupta. Advised these students in 2005. The work conducted with these students resulted in a conference publication, and the proposed circuit design approach improved circuit area as well as speed appreciably, compared to the traditional standard-cell based design approach.

Eric Menendez and Dumezie Maduike. I advised these students during Summer 2005, under the NSF Research Experience for Undergraduates (REU) program. They received the first prize for their REU work at TAMU, which involved the design of a fast comparator. The work they performed

MOSAID Technologies Inc., Exhibit 2026
Page 2026 - 70
IPR2025-01487, Infineon Technologies Americas Corp. v. MOSAID Technologies Inc.

was subsequently published at the International Conference on Computer Design (ICCD) 2006. Both students are currently pursuing graduate studies.

Advised TAMU EE undergraduates Rob Hammond and Anshul Gupta, under the URA program (2004-05).

Invited Talks

<u>Note:</u> ***Invited panel, invited tutorials, or invited paper talks are listed under separate heading.***

Indian Institute of Technology, Kanpur, India. (January 2014). Invited to present a talk on our work in applying Logic Synthesis to the understanding and cure of genetic diseases.

Advanced Micro Devices (AMD), Austin, TX. (December 2012). Invited to present a talk on our work on GPU based EDA algorithm acceleration.

University of Texas MD Anderson Research Center. (May 2010). Invited to present a talk on our work in logic techniques to infer the predictors for gene regulation.

University of California, Los Angeles (April 2009). Invited to present a talk on our work on specialized hardware architectures for solving Boolean Satisfiability.

University of Michigan, Ann Arbor (March 2009). Invited to present a talk on our work on our variation tolerant sub-threshold design flow.

University of Texas, Austin (February 2009). Invited to present a talk on our work on sub-threshold design of a BFSK transmitter.

Intel Corporation, Strategic CAD Labs, Hillsboro, OR (May 2008). Invited to present talks on GPU based acceleration of VLSI CAD algorithms, as well as extreme low power sub-threshold design.

Nascentric, Inc., Austin, TX (February 2007). Invited to present a talk on FPGA and GPU architectures for high speed circuit simulation.

Samsung Microelectronics, Seoul, Korea (August 2003). Invited to present two lectures on cross-talk immune VLSI design, and cross-talk avoidance in on-chip VLSI buses.

Indian Institute of Technology, Kanpur, India (August 2001). Presented a guest lecture on Bus Encoding to Alleviate Cross-talk in VLSI Design.

Indian Institute of Technology, Bombay, India (August 2001). Presented a guest seminar on Bus Encoding to Alleviate Cross-talk in VLSI Design.

Indian Institute of Technology, Delhi, India (August 2001). Presented a talk on Detailed Routing of Datapath Designs using Net Regularity Extraction.

Indian Institute of Technology, Madras, India (August 2001). Presented a guest lecture on Detailed Routing of Datapath Designs using Net Regularity Extraction.

Seagull Semiconductor, Austin, TX (August 2000). Invited to give a presentation on Network Flows and Graph Theoretic techniques to model an InfiniBand switch fabric I/O system.

MOSAID Technologies Inc., Exhibit 2026
Page 2026 - 71
IPR2025-01487, Infineon Technologies Americas Corp. v. MOSAID Technologies Inc.

Applications discussed included a performance simulator, and a tool to estimate reliability of connections in a switched fabric I/O system.

Hewlett-Packard Company, Fort Collins, CO (August 2000). Invited to give a talk on "Accurate Static CMOS Standard Cell Library Characterization".

Cirrus Logic, Broomfield, CO (July-August 2000). Two separate invited talks. One was on "Cross-talk Immune VLSI Design using Regular Layout Fabrics", and the other on "Mixed-signal Testing using Multi-valued Satisfiability".

Cadence Design Systems, San Jose, CA (March 2000). Invited presentation, "Network of PLA based VLSI design using Regular Layout Fabrics".

Sun Laboratories, Menlo Park, CA (March 2000). Invited to present my work on ASIC Design Flows for Deep-Submicron VLSI Design.

National Semiconductor Corporation, Santa Clara, CA (1999). Invited lecture on Sets of Pairs of Functions to be Distinguished (SPFDs) and their use in multi-level logic synthesis, with an emphasis on wire removal.

Honors and Impact

Received the "Engineering Teaching Excellence Award" from the College of Engineering, Texas A&M University, in Spring 2024.

Affiliate Scientist, National Center for Atmospheric Research (2022-2025). I was invited to serve as an Affiliate Scientist by NCAR (Boulder, CO), a leading weather research laboratory. I will be helping NCAR in the design of the radar down-conversion hardware for an airborne phased-array radar system that they are designing. An application to extend this position for 3 additional years is in progress.

"NIST-Lite: Randomness Testing of RNGs on an Energy-Constrained Platform", Lee, Bharathi, Lansford, Khatri. 39th IEEE International Conference on Computer Design (ICCD) 2021, pp 41-48, October 2021, virtual conference. **Nominated for best paper award (one of 5 papers)**

Received the "Outstanding Professor Award" in the of ECE, Texas A&M University, 2020. This award is in "recognition of teaching, research and service excellence".

Awarded the Air Force Research Laboratory (AFRL) *"Entrepreneural Research Fellowship – Flash-based Hardware Security",* in 2020. The total amount of this award is $100K.

I was awarded the "*Association of Former Students' Distinguished Achievement Award in Teaching (College Level)*", in Fall 2019.

Our paper *"A Robust C-element Design with Enhanced Metastability Performance"* co-authored by Sharma, Khatri, was deemed **Best Paper Award Candidate.** It appeared in the proceedings of the Great Lakes Symposium on VLSI (GLSVLSI) 2017, pp 95-100, May 10-12, 2017. Banff, Canada (24.4% acceptance rate)**.**

My student **John Leslie (an US Army Veteran) recommended me to the Texas A&M University Veteran Resource and Support Center** as the faculty who has made the greatest impact to their career. I received a medallion coin, and a letter from the Director of the Veteran Resource and Support Center, acknowledging my support of John's career.

MOSAID Technologies Inc., Exhibit 2026
Page 2026 - 72
IPR2025-01487, Infineon Technologies Americas Corp. v. MOSAID Technologies Inc.

My student **Michael Bass** graduated with his B.S. degree in Spring 2015, and received the **"Brown Family – Earl Rudder Outstanding Student Award"** among all the graduating students in Spring 2015. Michael is continuing with me on his Ph.D. degree starting Fall 2015.

"Simulation Analysis of Scintillation in a NaI Detector", Shah, Marianno, Khatri, Boyle. Accepted at 55th Annual Meeting of the Institute of Nuclear Materials Management (INMM), Atlanta, GA. July 20-24, 2014. **Best paper award, Nonproliferation and Arms Control division.**

The Ph.D. thesis of Ayan Mandal, of my students, was nominated for the ACM Best Dissertation Award, 2014 (outcome awaited).

Our work on GPU-based acceleration of EDA algorithms was featured in Deep Chip, (www.deepchip.com), a EDA and VLSI newsletter in February 2013. The article stated that "Five years ago, two researchers from Texas A&M (Gulati & Khatri), gave at DAC 08, the first paper on GPU acceleration for EDA SW".
http://deepchip.com/items/0518-03.html?goback=%2Egde_772377_member_215279073

My work (with Dr. Laszlo Kish) on noise-based logic is featured in its own Wikipedia page. http://en.wikipedia.org/wiki/Noise-based_logic

My work (with Dr. Laszlo Kish) on noise based logic was featured in New Scientist Tech. Issue 2780, 7 October 2010, in an article by Justin Mullins titled "Breaking the Noise Barrier -- Enter the Phonon Computer".

My group was the first to exploit GPUs to accelerate VLSI design algorithms. One of the first algorithms we accelerated on the GPU was *circuit simulation*. Our work in this area was funded by Nascentric Inc., an Austin, Texas startup. Nascentric's fast circuit simulator was sped up by a further 2.5X as a result of our research, and incorporated into their product offering.

The Wikipedia entry on "Logic Synthesis" is based on the material I wrote for an invited chapter titled "*Logic Synthesis*" in the CRC EDA handbook "EDA for IC Implementation, Circuit Design and Process Technology". Chapter co-authored by Narendra Shenoy of Synopsys Inc.

"*A SAT-based Scheme to Determine Optimal Fix-free Codes*", Best Student Paper Award at the Data Compression Conference (DCC), Snowbird, UT. March 24-26, 2010. My co-authors on this paper were Navid Abedini and Prof. Serap Savari (ECE, TAMU).

*"***FPGA-Based Hardware Acceleration for Boolean Satisfiability***"*, Gulati, Paul, Khatri, Patil, Jas. ACM Transactions on Design Automation of Electronic Systems (TODAES). Vol. 14, No. 2, March 2009. **Among the top 10 downloaded papers for the journal in 2010. Nominated for best paper for the journal (2010).**

I was awarded the "*Association of Former Students' Distinguished Achievement Award in Teaching*", in Fall 2009.

"*Fault Table Generation Using Graphics Processing Units*", Gulati, Khatri. IEEE International Test Synthesis Workshop 2009, Austin, TX. March. 23-25, 2009. **Received best student paper award.**

My Ph.D. candidate Kanupriya Gulati received the NVIDIA Fellowship for the 2008-2009 terms. This fellowship award included funds to the tune of $25,000, to be spent towards her Ph.D. research.

MOSAID Technologies Inc., Exhibit 2026
Page 2026 - 73
IPR2025-01487, Infineon Technologies Americas Corp. v. MOSAID Technologies Inc.

"Efficient Analytical Determination of the SEU-induced Pulse Shape". IEEE/ACM Asia and South Pacific Design Automation Conference (ASP-DAC) 2009, Yokohama, Japan. January 19-22, 2009, pp 461-467. **Selected among the finalists for the best paper award at the conference.** My co-author on this paper was my student Rajesh Garg.

Our 2008 paper titled "*A Single-Supply True Voltage Level Shifter*" has been **incorporated in the IC designs of LSI Logic Corporation.**

Undergraduates Joseph Duperre and Gordon Burgett, two NSF Research Experience for Undergraduates (REU) students who I supervised in Summer 2008, won the first and second prize for their summer REU work at TAMU.

Received the "Outstanding Professor Award" in the of ECE, Texas A&M University, 2007. This award is in "recognition of teaching, research and service excellence".

Our work on the use of coding techniques to mitigate the impact of inductive cross-talk allows a VLSI IC manufacturer to utilize less expensive wire-bond packages for high-speed applications, which was earlier infeasible. **I am told that Agilent Technologies Inc. is using this technique in their ICs.**

"Broadband Impedance Matching for Inductive Interconnect in VLSI Packages". International Conference on Computer Design (ICCD) 2005, October 2-5, San Jose, CA. **Best Paper Award, ICCD 2005.** My co-author on this paper was my student Brock LaMeres.

Undergraduates Eric Menendez and Dumezie Maduike, two NSF Research Experience for Undergraduates (REU) students who I supervised in Summer 2005, won the first prize for their summer REU work at TAMU.

"Performance Model for Inter-chip Busses Considering Bandwidth and Cost", received best paper award at the DesignCon East (2005) conference, Worcester, MA. September 19-21, 2005. My co-authors on this paper were student Brock LaMeres.

"Non-Manhattan Routing using a Manhattan Router", **selected among the top 4 papers, and nominated for best paper award at the VLSI Design conference in January 2005.** My co-authors for this paper were CU ECE student Edward Hursey and my Ph.D. student Nikhil Jayakumar.

"A Fast Ternary CAM Design for IP Networking Applications", candidate for Best Paper Award at the International Conference on Computer Communications and Networks (ICCCN-03), Dallas. October 2003. My co-authors on this paper were CU ECE students Bruce Gamache and Zachary Pfeffer.

California Microelectronics (MICRO) Fellowship, University of California, Berkeley (1993 - 94).

Microelectronics and Computer Development Fellowship, University of Texas, Austin (1987 - 89).

Honor Society Membership: Eta Kappa Nu, Tau Beta Pi, and Mensa.

Graduate Student Researcher funded by SRC and MARCO projects (1994 - 99).

MOSAID Technologies Inc., Exhibit 2026
Page 2026 - 74
IPR2025-01487, Infineon Technologies Americas Corp. v. MOSAID Technologies Inc.

Scholarship for Excellent Academic Performance, IIT Kanpur (III and V semesters, 1984 and 1986).

Valedictorian and School President, The Scholar High School, Bombay, India (1980).

Grants

Present:

"Edge Reinforcement Learning with Algorithm, Architecture and Circuit Co-Design". Hu, Khatri, Kalathil. This FuSe2 NSF proposal extends from 10/24 through 9/27. The total amount is $1.431M, and my portion of this is $674K.

Past:

"Multi-layer Cybersecurity and Situational Awareness to Enhance Resiliency in Qatar's Power Grid", Abu-Rub et al. This is a Qatar National Research Fund grant. This proposal extends from Jan 2021 to Jan 2025. The total amount is $3,865K, and my part is about $250K.

"RTML:Small:Real-Time Model-Based Bayesian Reinforcement Learning". Hu, Khatri. This proposal extends from Dec 2019 through Dec 2023. The total amount is $500K, my portion is $250K.

"Internet-of-Clothing: Wearable Wireless Energy and Smart Sensors", Ganta, Khatri. TEES Annual Research Conference (TARC) seed grant. The total amount of this grant is $5K, and my part is $2.5K. The duration of this project is from 5/21 to 8/22.

"Entrepreneural Research Fellowship – Flash-based Hardware Security". Khatri. This Air Force Research Laboratory (AFRL) proposal extends from Jan 2020 until October 2020. The total amount is $100K, my portion is $100K.

"Intel-Altera HARP Board Research Donation", Khatri. Selected among competitive proposals to receive a donation of an Intel Heterogenous Architecture Research Platform (HARP) in Summer 2015. Estimated value of this donation is $20k, support duration 3 years.

"Memory Architectures using a Ring-based Topology (MART)", PI Khatri. $10,000 proposal submitted to the Air Force Research Laboratory (AFRL), Rome, NY in August 2017. Period of performance 8/31/17 through 12/31/17. My portion of this is $10,000. Awarded.

"Memory Architectures using a Ring-based Topology (MART)", PI Khatri. $25,800 proposal submitted to the Air Force Research Laboratory (AFRL), Rome, NY in March 2017. Period of performance 6/5/17 through 8/18/17. My portion of this is $25,800. Awarded.

"*PFI-AIR-TT: Wearable Sleepwear for Quantitative Prognostication and Non-invasive Therapy of Obstructive Sleep Apnea",* Bukkapatnam, Khatri, Hanks, Le. Proposal submitted to the NSF, in April 2015. Total amount $200K, over 2 years. Awarded.

"Autonomous System to Measure, Assess and Report Rail Neutral Temperature", Fry, Khatri. Phase II Proposal awarded by Texas A&M Transportation Institute (TTI), September 5, 2014. Period of Performance is 2 years. Total amount $80K, my share of this is $80K. Internal proposal.

"Xilinx Gift Donation for Support of the teaching of Professor Sunil P Khatri", Khatri (PI). A gift of $8,000 was awarded in August 2014, by Xilinx Inc., a Silicon Valley company, for developing

MOSAID Technologies Inc., Exhibit 2026
Page 2026 - 75
IPR2025-01487, Infineon Technologies Americas Corp. v. MOSAID Technologies Inc.

new teaching techniques using Field Programmable Gate Arrays. Period of performance 8/2014 to 7/2016.

"University Research Supporting Deputy Assistant Secretary of Defense for Nuclear Matters (DASD (NM)). Subtask: Investigating New Types of Radiation Detectors Comprised of Integrated Circuits for Post-Detonation Forensics", Gamache, Khatri, Boyle, Castillo, Yates, Nelson, Gariazzo (PIs). Grant amount $1.81M, my portion is $170K (pending year 3 and 4 approvals). Sponsor is Science Applications International Corporation. Period of performance 5/2012 – 10/2016.

"*Revolutionary Low Power Component Design for Man Portable Radiation Detectors*", Marianno (PI), Khatri, Guise, Braithwaite. Defense Threat Reduction Agency (DTRA) grant awarded in June 2013. Total grant amount is $1,135,700K over 3 years. Awarded. My portion of this grant is about $260K.

"Noise-based Boolean Satisfiability on a GPU Platform", Khatri (PI). Research gift of $25,000 from Multicoreware, Inc. a Silicon Valley startup, for developing GPU based solutions for fast Boolean Satisfiability. Period of performance 1/2012 to 12/2014.

"*Low Power Field Programmable Gate Array with Specialized Serial Input/Output (I/O)*", Khatri (PI). This Maryland Procurement Office grant was submitted in April 2011. Total grant amount is $140K, over a period of 1 year starting May 2011. Awarded.

"*Extreme Low-power Sub-threshold FPGA*", Khatri (PI). Intelligence community postdoc (IC postdoc) proposal submitted in March 2011. The total amount of this proposal is $360K, over a period of 3 years. Awarded.

"GPU based Acceleration of BSIM4 Model Evaluation", Khatri (PI). Research gift of $15,000.00 from Accelicon Technologies, Inc., a Silicon Valley startup for developing GPU based techniques to speed up BSIM4 model evaluations in VLSI circuit simulation. The gift will be offered in two parts, of which the first part ($10,000) has already been sent by the donor. Period of performance 1/2009 to 12/2010.

"A Framework for Developing Novel Detection Systems Focused on Interdicting Shielded HEU", NSF proposal awarded in Fall 2007, award amount is $7.5M. My portion of this is about $300,000. The duration of this grant is September 2007 through August 2012.

"Low Power Field Programmable Gate Array (FPGA)", Single-PI NSA proposal awarded in Fall 2008, award amount is $10,000. The duration of this grant was until Fall 2010.

"High-End Virtex 5 FPGAs for Research Studies", received a high-end Virtex 5 LX110 FPGA board, along with software, from Xilinx Inc. Estimated value of this grant is $5,000. Equipment grant, Fall 2008.

"Research Applications on High-End FPGAs", received a high-end DE3 FPGA board along with software, from Altera Corporation. Estimated value of the grant is $3,000. Equipment grant, Fall 2008.

"*Research and Instructional FPGA Application*". Requested six FPGA hardware boards along with relevant software from Xilinx, Inc. Proposal awarded. PI Khatri. Total amount approximately $2,000. These boards will be used in our research as well as for course projects. The boards are currently being used for two research projects, and have been used by undergraduate students for their capstone projects. Equipment grant, Fall 2007.

MOSAID Technologies Inc., Exhibit 2026
Page 2026 - 76
IPR2025-01487, Infineon Technologies Americas Corp. v. MOSAID Technologies Inc.

"*ARM Armulator Software Grant*". Requested ARMulator software from ARM, Inc. Proposal awarded. PI Khatri. Total amount approximately $5000. This software is used in our research. Equipment grant, Spring 2006.

"*Hardware Architectures for ATPG using Boolean Satisfiability*", Khatri. Proposal accepted by Intel Corporation, gift amount is $35,000 for a period of 3 years beginning December 2005.

"Functional Sensors", Liang, Khatri, Vinson. Proposal accepted in February 2005, award amount is $700,000 over three years. My portion of this grant is about $225,000. This project ended in Spring 2009.

"Fast Look-up Algorithms on FPGAs and GPUs", Khatri. Proposal accepted in Spring 2007, award amount is $15,000, by Nascentric, a start-up company based in Silicon Valley. The duration of this grant was March 2007 through February 2008.

"NSF REU Proposal", This was submitted by PIs Kundur (ECE) and Butler-Purry (ECE). I had participated as a co-PI. This proposal covered 2 months of my summer salary in two separate years. Total amount of my portion is estimated at $23K.

"*Validation of an Extreme Low Power Design Approach*", Khatri. Proposal funded by Lawrence Livermore National Laboratories, award amount is $70,000 for a period of 2 year beginning April 2006.

"FPGA based Radar Signal Processor for Weather Radar Applications". I received this award (which covered my summer 2006 salary, as well as that of one of my graduate students) to spend 3 months at the National Center for Atmospheric Research (NCAR) in Boulder, CO. In these 3 months, we developed a general purpose, frequency-agile radar signal processing platform for NCAR. I anticipate that this collaboration will yield further research grants from NCAR. Total amount approximately $62K.

"Two-vector based Timing Analysis of Digital Circuits". National Semiconductor Corporation, Santa Clara, CA. August 2000 – May 2001. Research funded through the University of Colorado Foundation, and structured as an unrestricted gift. $50,000 total grant amount.

"Vector-pair based Timing Analysis of Digital Circuits". Semiconductor Research Corporation, Raleigh, NC. August 2001 – December 2001. Total grant amount was $50,000.

"Intelligent Adaptive Signal Processing for Wireless Communication". National Security Agency, February 2003 - February 2004. My portion of this $702,724 award from the NSA was approximately $233,747. This was a joint project with the PI Prof. Roop Mahajan (ME) and Prof. Gregory Grudic (Computer Science).

Service

External Service:

Invited to serve on the Technical Program Committee (TPC) for the International Symposium on Very Large Scale Integration (ISVLSI), 2025. I was invited to serve on the ISVLSI TPC in Spring 2025.

Invited to serve on the Technical Program Committee (TPC) for the International Conference on Computer-Aided Design (ICCAD), 2024. I was invited to serve on the ICCAD TPC in Spring 2024.

MOSAID Technologies Inc., Exhibit 2026
Page 2026 - 77
IPR2025-01487, Infineon Technologies Americas Corp. v. MOSAID Technologies Inc.

Invited to serve as Affiliate Scientist, National Center for Atmospheric Research (2022-2025). I was invited to serve as an Affiliate Scientist by NCAR (Boulder, CO), a leading weather research laboratory, in September 2022. I will be helping NCAR in the design of the radar down-conversion hardware for an airborne phased-array radar system that they are designing. An application to extend this position for 3 additional years is in progress.

Invited to serve on the Technical Program Committee (TPC) for the International Conference on Computer-Aided Design (ICCAD), 2023. I was invited to serve on the ICCAD TPC in Spring 2023.

Invited to serve on the Technical Program Committee (TPC) for the International Conference on Computer-Aided Design (ICCAD), 2022. I was invited to serve on Track 2.2 (Testing, Validation, Simulation and Verification), in Spring 2022.

Invited to serve as a track co-chair, International Conference on Circuits and Systems (ISCAS) 2022. I was invited to serve on the Digital Signal Processing track (Track 10), in Fall 2021.

Invited to serve as an external referee for a PhD thesis, Anna University. I was requested to serve as a referee in Fall 2021.

Invited to serve as an external referee for a Czech Science Foundation grant. I was requested to serve as a referee in June 2018.

Invited to serve as an external referee for the tenure case of a faculty member at the University of Missouri, Kansas City. I was requested to serve as an external referee in Spring 2018.

Invited to serve as Track Chair for the Logic Track for the International Conference on Computer-Aided Design (ICCAD) 2018. I was invited to serve as Track Chair in Spring 2018. Declined due to health reasons.

Invited to serve as Track Chair for the Logic Track for the International Conference on Computer-Aided Design (ICCAD) 2017. I was invited to serve as Track Chair in Spring 2017. Declined due to health reasons.

Invited to serve as Track Chair for the Logic Track for the Design Automation Conference (DAC) 2017. I was invited to serve in late 2016.

Invited to serve as a panelist for ICCAD 2016, for the panel titled *"Challenges and Opportunities of Stochastic Computing in the Dusk of Moore's Law and the Dawn of Big Data",* Declined due to health reasons.

Invited to serve as Track Chair for the Logic Track for the International Conference on Computer-Aided Design (ICCAD) 2016. I was invited to serve as Track Chair in Spring 2016

Invited to serve on the Technical Program Committee (TPC) for the Design Automation Conference (DAC) 2016. I was invited to serve on the EDA5 track (RTL/Logic Level and FPGA Synthesis, Design and Testing)

Invited to serve as Track Chair for the Logic Track for the International Conference on Computer-Aided Design (ICCAD) 2015. I was invited to serve as Track Chair in Spring 2015

Invited to serve on the Technical Program Committee (TPC) for the Design Automation Conference (DAC) 2015. I was invited to serve on the Logic Synthesis track.

MOSAID Technologies Inc., Exhibit 2026
Page 2026 - 78
IPR2025-01487, Infineon Technologies Americas Corp. v. MOSAID Technologies Inc.

Invited to serve on the Technical Program Committee (TPC) of the 28th International Conference on VLSI Design, Bangalore, India in 2015. I was invited to join the TPC in August 2014.

Invited to serve as Technical Program Committee (TPC) co-Chair, EDA Track, for the 21st IEEE International Conference on Electronic Circuits and Systems (ICECS), 2014. I was invited to serve as co-Chair in July 2014.

Invited to serve on the Technical Program Committee (TPC), Design Automation Conference (DAC) 2014. I served on the EDA6 track "High-level and Logic Synthesis and FPGA".

Invited to serve as Special Sessions Co-Chair for the 57th IEEE Midwest Symposium on Circuits and Systems (MWSCAS) 2014. Also serving on the organizing committee for this conference.

Invited to serve as a Review Committee Member (RCM) for the IEEE International Symposium on Circuits and Systems (ISCAS) 2014.

Invited to serve as Panel Chair for the 2nd IEEE Texas Workshop on Integrated Systems Exploration (TexasWISE), 2014. Also serving on the organizing committee for this workshop.

Invited to serve on the Advisory Committee, for the Hot Topics in Physical Informatics (HotPI) Workshop, 2013.

Invited to serve as Co-Chair for the IEEE International Conference on Electronics, Circuits, and Systems (ICECS) 2013. I served as co-chair for the "VLSI Systems, Applications and Computer Aided Design" track.

Invited to serve as a Panel Chair for the "Models and High-Speed Simulation" session, 15th ACM/IEEE System Level Interconnect Prediction (SLIP) Workshop 2013, Austin, TX. June 2, 2013.

Invited to join the Technical Program Committee (TPC), The 1st Workshop on Modeling of Biological Systems (MoBS) 2013, Austin, TX. June 2013.

Invited to serve on the ACM Transactions on Design Automation of Electronic Systems (TODAES) best paper committee, March 2013.

Invited to serve as Poster Chair for the 1st IEEE Texas Workshop on Integrated System Exploration (TexasWISE) 2013, Winedale, TX. March 2013. Also served on the organizing committee for this workshop.

Associate Editor, ACM Transactions on Design Automation of Electronic Systems (TODAES). Invited to serve in this capacity in February 2012. I will cover papers in the area of Logic, RTL and behavioral synthesis for a 3-year term.

Lead Guest Editor, VLSI Design. Invited in 2012 to serve as a lead Guest Editor for a Special Issue of VLSI Design.

Invited to join the Editorial Board, MDPI Journal of Electronics, May 2011.

Associate Editor, IEEE Transactions on Computers. I served in this position from 2010 to 2011.

MOSAID Technologies Inc., Exhibit 2026
Page 2026 - 79
IPR2025-01487, Infineon Technologies Americas Corp. v. MOSAID Technologies Inc.

Chair, ACM/SIGDA Logic/RTL Synthesis Technical Committee. I was invited to serve on this committee, from June 2009-2010.

Area Editor (Electronics Design) for the book "GPU Computing Gems". I was invited to serve as Area Editor in 2009.

Member, Technical Program Committee, IEEE International Workshop on Logic Synthesis (IWLS) 2005-07, 2010. Invited to join this committee in 2004.

Member, Technical Program Committee, Design Automation and Test in Europe (DATE) conference, 2010. I was invited to join the DATE TPC for Track D13 (Logic and Technology Dependent Synthesis for Deep-Submicron Circuits).

Member, selection committee for "ACM Best Ph.D. Dissertation Award in EDA for 2009", starting February 2010.

Track Chair for Logic Synthesis track, IEEE International Conference on Computer-Aided Design (ICCAD) 2009-10. I was invited to chair the Logic Synthesis track in Spring 2009.

General Chair, IEEE International Workshop on Logic Synthesis (IWLS-09).

Member, Technical Program Committee, International Symposium on Quality Electronic Devices (ISQED) 2009, 2010.

Publicity Co-chair, ACM/IEEE Great Lakes Symposium on VLSI (GLS-VLSI), 2009. Invited to serve as Publicity Co-chair in 2008.

Panel Chair, International Test Synthesis Workshop (ITSW), 2009. Invited to serve on the ITSW committee in 2008.

Technical Program Committee Chair, IEEE International Workshop on Logic Synthesis (IWLS-08). I was invited to join this committee in 2007.

Track Co-chair, IEEE International Symposium on Circuits and Systems (ISCAS) 2008-10. I was invited to co-chair the "Computer Aided Network DEsign" (CANDE) track of ISCAS in 2007.

Member, Technical Program Committee, IEEE International Conference on Computer-Aided Design (ICCAD) 2007, 2008, 2009. I was invited to join this committee in 2007.

Member, Technical Program Committee, DesignCon, 2007-2009.

Member, Technical Program Committee, IEEE Great Lakes Symposium on VLSI (GLSVLSI) 2008-10. I was invited to join this committee in late 2007.

Review Committee Member (RCM), IEEE International Symposium on Circuits and Systems (ISCAS) 2007. I was invited to serve as an RCM for the "Computer Aided Network DEsign" (CANDE) track.

Track Co-chair, IEEE International Conference on Computer Design (ICCD-07). I was invited to co-chair the "Test and Methodologies" Track of ICCD in 2007.

Technical Program Committee Member, IEEE International Workshop on Power and Timing Modeling, Optimization and Simulation (PATMOS), 2004-06. Invited to join this committee in

MOSAID Technologies Inc., Exhibit 2026
Page 2026 - 80
IPR2025-01487, Infineon Technologies Americas Corp. v. MOSAID Technologies Inc.

2003.

Member, Technical Program Committee, IEEE International Conference on Computer Communications and Networks (ICCCN-04). Invited to join this committee in 2003.

Invited to serve as Session Chair for several conferences including the International Conference on Computer Aided Design (ICCAD 2008), Great Lakes Symposium on VLSI (GLSVLSI) 2008, International Test Synthesis Workshop (ITSW) 2007, the International Symposium on Circuits and Systems (ISCAS 2006, 2007), the Asia-South Pacific Design Automation Conference (ASP-DAC 2006), the Design Automation Conference (DAC) 2005, the International Conference on Networking (ICON-03), and the Design Automation Conference (2005).

Reviewed a large number of technical papers for numerous technical journals and conferences (1993-2004). Reviews include IEE Transactions (Computers and Digital Techniques), IEEE Transactions on VLSI, IEEE Transactions on CAD of ICs and Systems, Electronic Letters, IEEE Journal of Solid-State Circuits, International Conference on VLSI Design, Design Automation Conference (DAC), International Symposium on Low-Power Electronic Design (ISLPED), Great-Lakes Symposium on VLSI (GLS-VLSI), International Conference on Computer-Aided Design (ICCAD), International Conference on Computer Design (ICCD), International Symposium on Circuits and Systems (ISCAS), European Design Automation Conference (Euro-DAC-96), and International Test Conference (ITC).

University and ECE Departmental Service:

Serving on the ECE Hiring Committee, Department of ECE, TAMU. My term on this committee is expected to be from 2024-25.

Serving on the CPEN ETAM Committee, Department of ECE, TAMU. My term on this committee is expected to be from 2024-25.

Serving on the ECE Former Students and External Relations Committee, Department of ECE, TAMU. My term on this committee is expected to be from 2024-25.

Serving on the Faculty Advisory Committee (FAC), Department of ECE, TAMU. My term on this committee is expected to be from 2022-24.

Serving on the Awards Committee, Department of ECE, TAMU. My term on this committee is expected to be from 2022-24.

Serving on the Internal Transfer Committee, Department of ECE, TAMU-Qatar. My term on this committee began in 2023.

Serving on the Computer Engineering Hiring Committee, Department of ECE, TAMU-Qatar. My term on this committee began in 2023.

Serving on the Graduate Students Committee (GSC), Department of ECE, TAMU. My term on this committee is expected to be from 2021-22.

Invited to join the University-level "Identity, Data, and Access Committee (IDAC)", in 2021

Invited to join the University-level "Online PhD" committee, 2021.

MOSAID Technologies Inc., Exhibit 2026
Page 2026 - 81
IPR2025-01487, Infineon Technologies Americas Corp. v. MOSAID Technologies Inc.

Served on the Peer Mentoring Committee, Department of ECE, TAMU. I served on this committee from late 2020 through summer 2021, and helped offload peer mentoring tasks to the Academic Success Center at TAMU.

Invited to join the College of Engineering Tenure and Promotion Advisory Council (CETPAC), 2020-21

Invited to take charge of the ECE Department Peer Tutor Program, Fall 2020.

Texas A&M University, College Station (Summer 2020). I redesigned all the labs for ECEN 248 (Digital Systems Design) and ECEN 449/749 (Microprocessor Systems Design) to be completely conducted without the need of a laboratory, in response to the pandemic. These modified labs can be used to create a distance ECE degree program, if need be.

Nominated to serve as Chair of the ECE Department Tenure and Promotion Commiteee, 2020.

Serving on the Tenure and Promotion committee, ECE department, TAMU (2019-20)

Served on the Graduate Studies Appeals committee, ECE department, TAMU (2019)

Serving on hiring committee for Faculty search, ECE department, TAMU-Qatar. I served on the search committee for the Assistant Professor level faculty search in our sister department, 2019.

Served on hiring committee for Faculty search, ECE department, TAMU-Qatar. I served on the search committee for instructional faculty in our sister department, 2018.

Serving on the ECE Hiring Committee (Jan 2018 – Dec 2018). I have been participating by reviewing faculty applications, meeting faculty candidates, and helping decide on hiring decisions for tenure-track as well as professional faculty

Serving on the Computer Engineering Curriculum Committee (CECC), Fall 2017 – Fall 2018.

Invited to serve on the College-level "High Performance Computing" (HPC) search committee. I was invited to serve on this committee by Dr. Georghiades in Spring 2015

Helped the ECE undergraduate recruiting efforts by presenting a talk on the benefits of an ECE degree, to about 100 freshman students who were considering ECE during their entry to major.

Helping undergraduate recruiting by helping conduct a laboratory session in the revamped "ECE Summer Enrichment Workshops" week in July, 2014. In this laboratory, students will learn about ECE by developing a solar car.

On the request of the ECE Department Head, I am initiating a "ECE Pizza Friday" in Spring 2014, in which students will attend a monthly evening meeting hosted by the ECE Department, to showcase the career opportunities that an ECE graduate enjoys. This will be continued in Fall 2014, when all incoming undergraduates will join TAMU with no declared major.

Serving on the TAMU College of Engineering "Emerging Technologies Advisory Council", (ELTAC), since 2014.

Presentation at Aggieland Saturday (2014). I attended a faculty panel session in which prospective students and their parents asked questions about the TAMU ECE Department.

MOSAID Technologies Inc., Exhibit 2026
Page 2026 - 82
IPR2025-01487, Infineon Technologies Americas Corp. v. MOSAID Technologies Inc.

New Course Development (Spring 2014). I have been working on developing a new undergraduate course. In this course, students will design, synthesize, simulate, place, route, and tape out a digital Integrated Circuit (IC). The course will be a senior elective course.

Course Laboratory Redesign (Spring-Summer 2014). I am working on converting the laboratory exercises of two courses, ECEN 248 (Digital Systems Design) and ECEN 449 (Microprocessor Systems Design) to a mobile laboratory station environment, using mobile test equipment from National Instruments.

New Course Development (Spring 2014). I have obtained permission from the Department Head of the ECE Department to initiate a course (a pass/fail, 1 credit course for sophomores or seniors) in which I will discuss career issues. The course will cover life lessons that are important for a healthy career, including life-long learning, networking, people skills, career choices and self-improvement. The lectures will be augmented by visits from industry leaders who will be able to share their career lessons with the students. This course is under development, and will be submitted for approval in Spring 2014.

Represented the ECE Department in the College of Engineering initiative to foster closer research ties with the ECE Department at the Indian Institute of Technology, Kanpur, India. Visited IIT Kanpur in 2013 to help identify possible areas of research synergy.

Serving on the ECE Distinguished Speaker Committee, as a representative of the CE group, starting Spring 2013.

Serving on the Computer Engineering Curriculum Committee as the representative of the CE group, starting 2013.

Helped migrate the ECEN 248 laboratory from a Windows platform to a Linux platform (Summer 2011).

Served as the College of Engineering representative for the Friends of India Network (FIN) (2010 - 11).

Served as the representative for ECE in the college level IT committee, to help reduce costs by shared services (2010 - present).

TAMU ECE Scholarship Committee Member, starting February 2010.

Serving as a Faculty Mentor under TAMU's Network Mentoring Program (NMP) (2009 – present).

Serving on the ECE Undergraduate Studies Committee as the representative of the CE group, starting 2009.

ECE Unix Committee (2008-2014). Along with two other faculty, I am helping provide recommendations for the upgrade and maintenance of the ECE Unix computing infrastructure. I am serving as the chair of this committee since 2009.

Presentation at Discover ECE day (2008-09). Presented a talk to prospective TAMU Engineering students and their parents. The talk titled "What does a Computer Engineer do?" covers courses, research and job prospects in the Computer Engineering area after a B.S. degree in CE from TAMU.

MOSAID Technologies Inc., Exhibit 2026
Page 2026 - 83
IPR2025-01487, Infineon Technologies Americas Corp. v. MOSAID Technologies Inc.

Texas A&M University, assisting in ABET Certification (Spring 2008, Spring 2009, Spring 2013, Spring 2014). Provided data and analysis results for the ECEN 449 course, for ABET certification purposes. Will be providing similar data for Spring 2009.

Redesigned Laboratories for ECEN 248 (Summer 2008). Along with Dr. Choi, I helped to substantially redesign the laboratories for ECEN 248 (Introduction to Digital Systems Design), and make them more current and technically relevant.

Texas A&M University, Qatar. Visited our ECE Department at TAMU-Q during January 2008, to demonstrate the laboratory exercises that we had developed for ECEN 449, to the faculty and laboratory coordinators at TAMU-Q.

Texas A&M University, designed and developed the website for the Computer Engineering group, 2007. Along with my colleague Dr. Alex Sprintson, we developed a new website for the CE group (http://cegroup.ece.tamu.edu).

Course Redesign, ECEN 449 (Summer 2007). Along with Dr. Reddy, I helped to redesign the laboratories and lectures for ECEN 449 (Microprocessor Systems Design).

Presentation at Aggieland Saturday (2007-09). Presented a 15-minute talk to prospective TAMU Engineering students and their parents. The talk covered courses, research and job prospects in the Computer Engineering area after a B.S. degree in CE from TAMU.

Graduate Admissions, Computer Engineering group (2006-2009). Along with a colleague, I help screen graduate applicants for the Computer Engineering group, and make admissions decisions.

Member, ECE Distinguished Visitor Committee (Fall 2005). I served on this committee from Fall 2005 through Fall 2006.

Texas A&M University, ECE faculty interviews, 2004-12. I have made special efforts to attend all ECE faculty hiring candidate seminars, and spend time with ECE faculty candidates. I have provided my feedback to the ECE Department Head, to help ensure that we hire the best faculty.

Texas A&M University, participated in ABET Certification for the Computer Engineering program, 2004-05. The certification process went through flawlessly. My course was used by the ABET personnel to interview the students.

Was invited to be a panelist on a panel discussion on "How to Search for an Academic Job", Texas A&M University, Fall 2004.

Informal advising of undergraduates. Some of my undergraduate and graduate students frequently solicit my input on their courses, career choices and technology trends.

Encouraging undergraduates in ELEN 248, ELEN 449 and ELEN 454 to consider pursuing graduate school. Most of them enjoy this discussion very much, since they were not familiar with the option of continuing studies in graduate school.

Advised TAMU EE undergraduates Rob Hammond and Anshul Gupta, under the URA program (2004-05).

Member, Dissertation and Thesis Committee for several Texas A&M students. The students include Hari Sankar (EE, Ph.D.), Ekpe Orafur (EE, Ph.D.), Taekwon Jee (ME, M.S.), Seraj Ahmad (CS, M.S.), Nitin Nangre (ECE, Ph.D.), Kiran Gunnam (ECE, Ph.D.), Ganesh Venkataraman (EE, Ph.D.), Rohit Singhal (EE, Ph.D.), Rupak Samanta (CS, Ph.D.), Maja Knezev (EE, Ph.D.), Zarko

MOSAID Technologies Inc., Exhibit 2026
Page 2026 - 84
IPR2025-01487, Infineon Technologies Americas Corp. v. MOSAID Technologies Inc.

Djekic (EE, Ph.D.), Tae Kim (CS, Ph.D.), Meng Shi (EE, M.S.), Jing Sun (EE, M.S.) and John Kocurek (EE, M.S.).

University of Colorado, ECE VLSI Group Ph.D. Preliminary Exam Committee. Since I joined CU, I had been on the VLSI Group Ph.D. Preliminary Exam Committee. I had been involved in conducting about 15 preliminary exams to date. I chaired this committee in 2003, and in 2004 as well.

Member, Graduate Admissions Committee, Department of ECE, CU Boulder (2000 – 2002). Reviewed files and recommended graduate students for admissions. Proposed methods to improve the quality of admitted ECE graduate students. Visited top international schools to encourage high-quality graduate students to apply to the ECE department. Pointed out that we were emphasizing undergraduate GPA too heavily in our graduate admissions process, which is error-prone since the undergraduate GPA is estimated in many cases. Recommended and helped implement methods to advertise ECE more aggressively, to ensure that we get quality applicants.

Book review of "Cross-talk Avoidance Techniques in VLSI", Kluwer Academic Publishers, 2002.

University of Colorado, ECE faculty hiring (2000 – 2002). Provided detailed feedback on all faculty candidates to the Hiring Committee to support the effort of hiring quality faculty. I have met with and attended the seminars of most of the ECE faculty candidates since my arrival at CU.

University of Colorado, ECE Technical Reports (2000 – 2001) When I joined the ECE department, there was no mechanism for faculty to create Technical Reports for their research work. I recommended this to our Chair, and worked with the ECE staff to bootstrap this effort.

University of Colorado, participated in ABET Certification for the ECE Department by providing statistical information about exams and homework from the ECEN 4703 course.

Book review of "Introduction to VLSI Circuits and Systems" by John Uyemura (John Wiley and Sons Publishers), 2001.

Contributed to the release of VIS, a formal verification tool that is developed and distributed by the VLSI group under the direction of Prof Fabio Somenzi. VIS-1.4 was released in Summer 2001 and VIS-2.0 was released in Fall 2002. I have worked on code review, bug fixes and several low-level tasks related to the release.

Member, Dissertation and Thesis Committee for the following CU students: Chao Wang (ECE, Ph.D.), HoonSang Jin (ECE, Ph.D.), Bing Li (ECE, Ph.D.), Adrian Michalicek (ME Ph.D.), Sandeep Dhar (ECE Ph.D.), Yin Yan (ECE Ph.D.), Se-Ho You (ECE Ph.D.), Garrett Holthaus (ECE, M.S.), In-Ho Moon (ECE Ph.D.), Benjamin Patella (ECE M.S.), Balakrishna Kumthekar (ECE Ph.D.), Stephen Gallant (ECE M.S.), Nwanua Elumeze (ECE M.S.), Subramoni Parameswaran (ECE M.S.), Jay Plucienkowski (ECE M.S.), Matthew Lovell (ECE M.S.).

Computing infrastructure of the CU VLSI CAD group: Along with Prof. Fabio Somenzi, I had worked on upgrading the hardware and software infrastructure of the VLSI research laboratory. I had been instrumental in obtaining educational licenses for Rational Software products, which are critically important for us to be able to develop quality software releases from the VLSI group.

Technical Advisor, Accelicon, Inc. (2009-10). Invited to join the Technical Advisory Board of Accelicon, a Silicon Valley company specializing in SPICE model card extraction for circuit simulation. My role was to advise the company in areas relating to the use of GPUs to accelerate their products.

MOSAID Technologies Inc., Exhibit 2026
Page 2026 - 85
IPR2025-01487, Infineon Technologies Americas Corp. v. MOSAID Technologies Inc.

Technical Advisor, Nascentric, Inc. (2008-09). Invited to join the Technical Advisory Board of Nascentric, a company specializing in fast circuit simulation. My role was to advise the company in areas relating to the use of GPUs to accelerate their products.

Technical Advisor, InMage Systems, Inc., Milpitas, CA (2002-06). Invited to join the Technical Advisory Board of SV Systems, a Storage-area Networking (SAN) start-up company specializing in data recovery. My role was to advise the company in areas relating to VLSI design and implementation of relevant ICs.

Faculty Advisor, ITU Ventures, Beverly Hills, CA (2002-04). My role was to advise the ITU personnel about the viability of business proposals in the areas of VLSI Design and CAD.

Technical Advisor, Jasmine Networks, Inc., Santa Clara, CA (2000-01). Invited to join the Technical Advisory Board of Jasmine Networks, an optical networking startup company. My involvement included advice on VLSI issues, including system-level high-speed I/O issues, cross-talk immune bus design, and advice on VLSI design and fabrication.

Recommended to the ECE Department Chair at the University of Colorado, to conduct an **"Industrial Visitor Day", w**here we would showcase our ECE research and network with the members of the local industry to share our results, and also possibly develop research collaborations with industry. This was implemented in April 2000.

Responsible for responding to user queries about SIS (1993-99). SIS (Sequential Interactive System) is a logic synthesis and optimization system developed at the CAD group at the University of California, Berkeley.

Conducted the Computer-Aided Design Seminar at UC Berkeley (1997-98). Tasks involved inviting and hosting international guests at the seminars, and coordinating the seminars.

Reviewed grant proposals for California MICRO grants (1997).

Involved in industrial consulting with Silicon Valley companies (1994-95). Consultant for SUN microsystems' CAD group as well as their UltraSPARC group in the area of CAD algorithms and issues. Conducted a week-long series of lectures on state-of-the-art CAD algorithms. The focus was SIS, a logic synthesis and optimization tool developed at UC Berkeley. The audience was a group of practicing engineers from the corporate CAD group and the UltraSPARC microprocessor design groups.

Additional

Professional Society Membership: Institution of Electrical and Electronic Engineers (IEEE), Association of Computing Machinery (ACM), American Association for the Advancement of Science (AAAS).

Volunteer, Boulder Shelter for the Homeless. Once each month, a small group of us sponsor dinner for the homeless who visit the shelter.

Student Counselor for the Counseling Service, I.I.T., Kanpur, India (1984-1987).

Naturalized Citizen of the United States of America.

MOSAID Technologies Inc., Exhibit 2026
Page 2026 - 86
IPR2025-01487, Infineon Technologies Americas Corp. v. MOSAID Technologies Inc.

References

Available upon request.

MOSAID Technologies Inc., Exhibit 2026
Page 2026 - 87
IPR2025-01487, Infineon Technologies Americas Corp. v. MOSAID Technologies Inc.