IN THE UNITED STATES DISTRICT COURT
FOR THE EASTERN DISTRICT OF TEXAS
MARSHALL DIVISION

VALTRUS INNOVATIONS LTD. and KEY PATENT INNOVATIONS LTD., **Plaintiffs,** **v.** **FEDEX OFFICE AND PRINT SERVICES, INC.,** **Defendant.**	**Case No. 2:25-cv-516-JRG**

DEFENDANT FEDEX OFFICE AND PRINT SERVICES, INC.'S
DISCLOSURES PURSUANT TO PATENT RULES 3-3 AND 3-4

TABLE OF CONTENTS

I. ASSERTED CLAIMS 1

II. AMENDMENT/SUPPLEMENTATION 2

III. ALLEGED PRIORITY DATE AND RELATED INVALIDITY ISSUES 5

IV. P.R. 3-3(A) – IDENTIFICATION OF PRIOR ART 6

A. The ’832 Patent 8

B. The ’332 Patent 16

C. The ’686 Patent 20

D. The ’416 Patent 25

V. P.R. 3-3(B) – INVALIDITY GROUNDS 30

A. Anticipation 31

1. The ’832 Patent 31

2. The ’332 Patent 34

3. The ’686 Patent 36

4. The ’416 Patent 38

B. Obviousness 41

1. The ’832 Patent 46

2. The ’332 Patent 61

3. The ’686 Patent 70

4. The ’416 Patent 83

VI. P.R. 3-3(D) – OTHER GROUNDS FOR INVALIDITY – 35 U.S.C. § 112 92

A. Legal Standards and Reservation of Right 92

B. Identification of Terms and Phrases 94

VII. SUBJECT MATTER INELIGIBILITY – 35 U.S.C. § 101 103

VIII. ACCOMPANYING DOCUMENT PRODUCTION 106

Pursuant to Docket Control Order (Dkt. No. 23, as amended by Dkt. No. 36) and Local Patent Rule 3-3, Defendant FedEx Office and Print Services, Inc. ("Defendant" or "FedEx") hereby provides its Invalidity Contentions concerning U.S. Patent Nos. 7,120,832 (the "'832 Patent"); 7,640,332 (the "'332 Patent"); 7,904,686 (the "'686 Patent"); and 8,370,416 (the "'416 Patent") (collectively, the "Asserted Patents") to Valtrus Innovations Ltd. and Key Patent Innovations Ltd. ("Plaintiffs" or "Valtrus").

As further detailed in and supported by these Invalidity Contentions, Defendant contends that each of the Asserted Claims is invalid under at least 35 U.S.C. §§ 101, 102, 103, and/or 112. Defendant reserves the right to prove the invalidity of the Asserted Claims on bases other than those required to be disclosed in these disclosures pursuant to P.R. 3-3.

The citation of prior art herein and the accompanying exhibits are not intended to reflect Defendant's claim construction contentions, which will be disclosed in due course in accordance with the Docket Control Order and may instead reflect Plaintiffs' apparent (and potentially erroneous) claim constructions based on its Infringement Contentions.

I. ASSERTED CLAIMS

As disclosed in its P.R. 3-1 Infringement Contentions served on Defendant, Plaintiffs assert the following claims of the Asserted Patents (the "Asserted Claims"):

Patent	**Claims**
U.S. Patent No. 7,120,832	Claims **1**-11, **25**-26
U.S. Patent No. 7,640,332	Claims **1**-8
U.S. Patent No. 7,904,686	Claims **1**-8
U.S. Patent No. 8,370,416	Claims **1**-8

These Invalidity Contentions address only the Asserted Claims specifically set forth in Plaintiffs' Infringement Contentions.

II. AMENDMENT/SUPPLEMENTATION

Defendant's Invalidity Contentions pertain to the Asserted Claims as identified in Plaintiffs' Infringement Contentions. To the extent the Court later allows Plaintiffs to amend its Infringement Contentions and/or assert one or more claims other than the Asserted Claims, Defendant reserves the right to modify, amend, or supplement these Invalidity Contentions accordingly to, for example, show the invalidity of any such newly Asserted Claims.

These Invalidity Contentions are based on Defendant's current understanding of the Asserted Claims and Plaintiffs' apparent view of the scope of those claims as shown, for example, in Plaintiffs' Infringement Contentions. A *Markman* Order in this case has not yet been issued, and in no way shall these Invalidity Contentions be taken as any admission or acquiescence by Defendant as to the proper scope of the Asserted Claims and/or proper claim constructions of terms and phrases recited in those claims. By identifying prior art that anticipates and/or renders obvious the Asserted Claims, Defendant does not admit that the claim limitations are capable of construction, does not admit that any claim limitations are supported with an appropriate written description and enabling disclosure in the applicable patent specifications, and does not adopt Plaintiffs' apparent claim constructions or admit the accuracy of any particular claim construction.[1] Defendant reserves all rights to later challenge or oppose any claim constructions advanced by Plaintiffs and to present its own claim construction positions.

[1] Defendant does not concede that Plaintiffs' apparent interpretation of the claims is correct, but rather asserts the well-established principle that whatever infringes a claim if later in time anticipates if earlier in time. *Bristol-Myers Squibb Co. v. Ben Venue Labs., Inc.*, 246 F.3d 1368, 1378 (Fed. Cir. 2001). Thus, where Plaintiffs for purposes of its infringement case alleges that a feature of an accused product meets a particular limitation recited in one or more of the Asserted Claims, then that feature, should it be found in the prior art, would also cause that limitation to be met for invalidity purposes.

Defendant further reserves the right to revise these Invalidity Contentions in view of the Court's construction of terms and phrases recited in one or more of the Asserted Claims, additional information obtained during discovery, additional infringement theories put forth by Plaintiffs during fact and/or expert discovery, any findings as to the priority date(s) of the Asserted Claims, and/or positions that Plaintiffs, its fact witnesses, or its expert witness(es) may take concerning claim construction, infringement, and/or invalidity issues.

Defendant further reserves the right to supplement its accompanying P.R. 3-4(b) document production should it later discover additional prior art documents, information, testimony, prior art systems and related documentation, and/or software or hardware code, including information provided by third parties after the date of service of these Invalidity Contentions.

Because discovery has just recently begun, Defendant anticipates that additional prior art and invalidity bases may be found. Defendant's investigation and analysis of the prior art is continuing, and thus Defendant reserves the right to supplement, amend, and/or revise the information provided herein as Defendant conducts further investigation and/or analysis, including identifying, charting, and relying on additional references.

Additionally, in view of likely third-party discovery that will be taken, Defendant reserves the right to present additional items of prior art under 35 U.S.C. §§ 102(a), (b), (e), and/or (g) and/or § 103 located during discovery or further investigation, and to assert contentions of invalidity under 35 U.S.C. §§ 102(c), (d), or (f). For example, Defendant has and expects to issue subpoenas to third parties believed to have knowledge, documents, and/or other evidence concerning invalidity of one or more of the Asserted Claims.

In addition to the positions and prior art identified in these Invalidity Contentions (including the accompanying invalidity claim charts), Defendant also incorporates by reference all

Invalidity Contentions, prior art,[2] and invalidity claim charts (including, without limitation, all anticipation positions, obviousness positions (including all prior art combinations and motivations to combine), indefiniteness positions, written description positions, and non-enablement positions) concerning one or more of the Asserted Patents, as disclosed at any time. This includes without limitation disclosures in previous or related litigation, in United States Patent & Trademark Office ("USPTO") proceedings, by the Plaintiffs, or by the named inventors or any individuals associated with the prosecution and/or post-grant review of the Asserted Patents.

Specifically, for example, Defendant identifies, as prior art upon which it may rely to show the invalidity of the Asserted Claims, the prior art references disclosed by parties in any other litigation involving one or more of the Asserted Patents, any patent related to any of the Asserted Patents, and/or any other patent allegedly assigned to Valtrus claiming priority to the Asserted Patents (collectively, "Other Valtrus Proceedings"). Plaintiffs have a duty to produce to Defendant all relevant documents from the Other Valtrus Proceedings including but not limited to all prior art, Invalidity Contentions, and expert reports on invalidity (among other relevant items).

Defendant reserves the right to supplement or otherwise amend these Invalidity Contentions in response to any relevant discovery provided by third parties, Plaintiffs, opening or rebuttal expert reports, fact or expert depositions, or in response to any claim construction ruling(s) issued by this Court (regardless of how and when such ruling is made). Defendant also reserves the right to supplement or otherwise amend these Invalidity Contentions in response to any rebuttal evidence disclosed by Plaintiffs or as otherwise may be necessary or appropriate under the circumstances.

[2] Prior art appearing in the file histories of the Asserted Patents is not required to be separately produced by Defendant under P.R. 3-4(b).

III. ALLEGED PRIORITY DATE AND RELATED INVALIDITY ISSUES

Plaintiffs' Infringement Contentions assert that each asserted claim in each of the patents-in-suit is entitled to claim priority to at least the following applications:

Asserted Patent	Priority Applications
'832 Patent	Application No. 09/966,953, filed Sep. 27, 2001
'332 Patent	Application No. 12/003,182, filed December 20, 2007 Foreign Application 2428/CHE/2006, filed Dec. 27, 2006
'686 Patent	Application No. 12/152,595, filed May 13, 2008 Foreign Application 1671/CHE/2007, filed Jul. 31, 2007
'416 Patent	Application No. 11/411,732, filed Apr. 26, 2006

FedEx disputes these priority claims, which Valtrus has failed to support. For example, Valtrus has not shown that any of the applications cited above provide the necessary support for the Asserted Claims in this case. To the extent Valtrus seeks to amend or otherwise provide support for its priority claims in the future or if Plaintiffs alleges any other priority date for any of the Asserted Claims, FedEx reserves the right to modify, amend, or supplement its Invalidity Contentions with additional prior art references. Furthermore, FedEx reserves the right to rely on prior art references related to those disclosed below. For example, if a prior art patent application ceases to be prior art because Valtrus is able to establish one of its priority claims above, FedEx reserves the right to rely on the patent that ultimately issued from that patent application in the event that the patent remains prior art under, for example, pre-AIA § 102(e). Similarly, to the extent FedEx relies on an issued patent, FedEx reserves the right to rely on the underlying patent application and any related patents and patent applications that were filed in the U.S. or abroad.

Notwithstanding its prior reservation of rights, Defendant also reserves the right to argue that it has been unduly prejudiced should Plaintiffs allege an earlier priority date for any of the Asserted Claims, and that accordingly Plaintiffs should not be allowed to do so.

IV. P.R. 3-3(A) – IDENTIFICATION OF PRIOR ART

Pursuant to P.R. 3-3(a), and subject to Defendant's reservation of rights, Defendant identifies each item of prior art that anticipates or renders obvious the Asserted Claims below.

The accompanying invalidity claim charts cite to particular teachings and disclosures of the prior art references as applied to features of the Asserted Claims. However, persons having ordinary skill in the art may view an item of prior art generally in the context of other publications, literature, products, and understanding. Accordingly, the cited portions are only exemplary and are intended to put Plaintiffs on notice of the basis for Defendant's contentions. Defendants have endeavored to identify the most relevant portions of the references, but the references may contain additional support for particular claim limitations. Defendant reserves the right to rely on uncited portions of the prior art references, other documents, and/or operational systems, as well as fact and expert testimony, to provide context or to aid in understanding the cited portions of the references and interpreting the teachings of the prior art and to establish bases for combinations of certain cited references that render the Asserted Claims obvious.

Defendant reserves the right to rely on any prior art system referenced, embodied, or described in any of the prior art references identified herein, or which embodies any of the prior art references identified herein. Moreover, to be clear, Defendant reserves the right to rely on inventor admissions concerning the scope of the prior art relevant to the Asserted Patents found in, inter alia, the prosecution histories of the Asserted Patents and related patents and/or patent applications, any testimony or declarations of the named inventors concerning the Asserted Patents or related patents, and any papers or evidence submitted by Plaintiffs in connection with this litigation, any other pending or future litigation brought by Plaintiffs involving the Asserted Patents or related patents, or inter partes review proceedings involving the Asserted Patents or related patents. Defendants also may establish what was known to a person having ordinary skill in the art through treatises, published industry standards, other publications, products, and/or testimony.

Where the invalidity claim charts cite to a particular figure in a reference, the citation should be understood to encompass the caption of the figure and other text relating to and/or describing the figure. Similarly, where the invalidity claim charts cite to particular text referring to a figure, the citation should be understood to include the figure and related figures as well.

The prior art references listed herein and in the accompanying invalidity claim charts may disclose the elements of the Asserted Claims explicitly and/or inherently. The prior art references are also relevant for their showing of the state of the art and reasons and motivations for making improvements, additions, and combinations. The suggested obviousness combinations are provided in the alternative to Defendants' anticipation contentions and are not to be construed to suggest that any reference is not itself anticipatory.

Further, the combinations of prior art references contained herein demonstrating the obviousness of the Asserted Patents under 35 U.S.C. § 103 are merely exemplary and are not intended to be exhaustive. All such combinations are intended to include and be in view of the knowledge of a person of ordinary skill in the art. Additional obviousness combinations of the identified prior art references are possible, and Defendant reserves the right to use any such combination(s). In particular, Defendant is currently unaware of the extent, if any, to which Stratasys will contend that limitations of any particular claim(s) are not disclosed in the art that Defendant has identified as anticipatory. To the extent that Plaintiffs do so, Defendant reserves the right to identify other evidence or references that anticipate or render obvious the particular claim(s).

Nothing in these Invalidity Contentions should be treated as an admission that any of the accused instrumentalities meet any limitation of the Asserted Claims. Defendant denies infringing the Asserted Claims. To the extent that any prior art references identified by Defendant contains a claim element that is the same as or similar to an element in an accused instrumentality, based on a claim construction inferred from Plaintiffs' Infringement Contentions, inclusion of that reference in Defendant's Invalidity Contentions is not a waiver by Defendant of any claim construction or

non-infringement position, nor is it an admission or suggestion by Defendant that any accused instrumentality satisfies the limitations of the Asserted Claims under a proper construction of those claims.

Defendant also intends to diligently seek discovery from third parties to demonstrate the alleged inventions were known or used by others under 35 U.S.C. § 102(a), in public use and/or on-sale under 35 U.S.C. § 102(b), derived under 35 U.S.C. § 102(f), and/or invented earlier under 35 U.S.C. § 102(g). Defendant may therefore modify, amend, and/or supplement these Invalidity Contentions if and when further information becomes available.

Subject to Defendant's reservation of rights, the following prior art patents, printed publications, and systems, alone and/or in combination, anticipate and/or render obvious the Asserted Claims of the Asserted Patents.

Discovery, however, is ongoing, and Defendant's prior art investigation and third-party discovery are therefore not yet complete. Defendant reserves the right to present additional items of prior art under pre-AIA 35 U.S.C. § 102(a), (b), (e), (f) and/or (g), and/or § 103; or under AIA 35 U.S.C. § 102(a)(1) and/or 102(a)(2), and/or § 103 located during discovery or further investigation. For example, Defendants have issued and expect to issue additional subpoenas to third parties believed to have knowledge, documentation, and/or corroborating evidence concerning some of the prior art listed in this and the following sections and/or additional prior art. These third parties include, without limitation, the authors, inventors, or assignees of the references listed in these disclosures. In addition, Defendant reserves the right to assert invalidity under pre-AIA 35 U.S.C. §§ 102(c) or (d) to the extent that discovery or further investigation yields information forming the basis for such invalidity.

A. The '832 Patent

Invalidity claim charts identifying disclosures in the references identified in Table 1-A as to the Asserted Claims of the '832 Patent are provided in attached Exhibits A1-A4. Defendant

reserves the right to rely on the inventions described in the below patents and printed publications as being patented or described in a printed publication under pre-AIA §§102(a), (b), and/or (e). Defendant also reserves the right to rely on the inventions described in the below patents and printed publications as evidence that the invention was known by others in this country under pre-AIA §102(a).

Table 1-A: Prior Art Patents and Printed Publications for the '832 Patent

Patent No. or Title (Primary Inventor/Author)	Date of Issue/Publication	Filing Date (If Patent)
U.S. Patent No. 5,287,363 ("Wolf")	Issued Feb. 15, 1994	Filed Jul. 1, 1991
U.S. Patent No. 5,325,505 ("Hoffecker")	Issued Jun. 28, 1994	Filed Sep. 4, 1991
U.S. Patent No. 6,061,761 ("Bachmat")	Issued May 9, 2000	Filed Oct. 6, 1997
U.S. Patent No. 6,314,503 ("D'Errico")	Issued Nov. 6, 2001	Filed Dec. 30, 1998
U.S. Patent No. 5,584,018 ("Kamiyama")	Issued Dec. 10, 1996	Filed Sep. 15, 1994
U.S. Patent No. 5,881,311 ("Woods")	Issued Mar. 9, 1999	Filed Jun. 5, 1996
"Symmetrix Model 33XX Product Manual P/N 200-857-550 REV B" ("33XX Product Manual")	Published Apr. 1997	N/A
"EMC ControlCenter Enterprise Storage Software Product Description Guide" ("ControlCenter PDG")	Published Sep. 2001	N/A
"EMC ControlCenter Version 5.0.3 Troubleshooting Guidelines P/N 300-000-302 REV A02" ("ControlCenter TG")	Published Jun. 17, 2002	N/A
"EMC ControlCenter Version 5.0 Online Help Volume 1 P/N 300-000-376 REV A01" ("ControlCenter OHV1")	Published Dec. 2001	N/A
U.S. Patent No. 6,571,257 ("Duggan")	Issued May 27, 2003	Filed Jun. 7, 2000

“The Windows 2000 Device Driver Book, A Guide for Programmers, Second Edition” (“Windows 2000 Device Driver Book”)	Published Nov. 20, 2020	N/A
“Building VTrace, a Tracer for Windows NT and 2000” (“Lorch”)	Published Feb. 2000	N/A
U.S. Patent Publication No. 2002/0103969 (“Koizumi”)	Published Aug. 1, 2002	Filed Aug. 31, 2001
“Barracuda 36 – Product Manual, Rev. C” (“Barracuda”)	Published Aug. 22, 2000	N/A
“Seagate Barracuda 36ES Family — Product Manual, Rev. A” (“Seagate Barracuda”)	Published Dec. 11, 2000	N/A
“Automated Disk Drive Characterization, CMU-CS-99-176” (“Schindler”)	Published Dec. 1999	N/A
“Compaq Service Reference Guide, Compaq Deskpro Personal Computers Compaq Professional Workstations” (“Compaq Service Reference Guide”)	Published 2000	N/A
“Compaq Integration Note, Focus on Compaq Server Health in a NetWare Environment” (“Compaq Integration Note”)	Published Feb. 2000	N/A
“Compaq Management Agents for Servers for OS2 Reference Guide, 5.00” (“Compaq Management Agents Reference Guide”)	Published Mar. 2001	N/A
“VERITAS NetBackup™ 3.4 for NDMP, System Administrator’s Guide” (“Veritas NetBackup 3.4 for NDMP”)	Published Jun. 2000	N/A
“VERITAS NetBackup™ 3.4 for Lotus Notes, System Administrator’s Guide” (“Veritas NetBackup 3.4 for Lotus”)	Published May 2000	N/A
“VERITAS NetBackup™ 3.4 for Oracle, System Administrator’s Guide, Windows NT” (“Veritas NetBackup 3.4 for Oracle”)	Published Jun. 2000	N/A

"Oracle8i Recovery Manager User's Guide and Reference Release 2 (8.1.6)" ("Oracle8i Guide")	Published Dec. 1999	N/A
U.S. Patent No. 6,205,529 ("Shangam")	Issued Mar. 20, 2001	Filed Sep. 25, 1997
U.S. Patent No. 5,398,142 ("Davy")	Issued Mar. 14, 1995	Filed May 31, 1989
"IBM DFSMSdss Storage Administration Reference – Release 1" ("IBM DFSMSdss")	Published Mar. 2001	N/A
"VERITAS File System 3.4 Administrator's Guide" ("Veritas VxFS 3.4 Guide")	Published Nov. 2000	N/A
"Getting Started with Tivoli Storage Manager: Implementation Guide" ("TSM Implementation Guide")	Published Aug. 2000	N/A

Prior art systems were also known, publicly used, sold, or offered for sale prior to then respective Asserted Patents. Invalidity claim charts identifying disclosures in the references identified in Table 2-A as to the Asserted Claims of the '832 Patent are provided in attached Exhibits A5-A6. Each prior art system was on sale or publicly available at least as early as the date provided, but discovery may reveal even earlier sale or public availability. Defendant further relies on each document describing a system as invalidating prior art itself (*e.g.*, as a printed publication). Defendant further relies on each document describing a system as combined with references in the same manner as disclosed for the system the document describes.

Table 2-A: Prior Art Systems for the '832 Patent

System	Date of Sale or Public Availability	Seller or Manufacturer Making Information Available and to Whom
EMC Symmetrix Management Ecosystem	No later than September 26, 2001	EMC Corporation; Dell Technologies Inc.
IBM Tivoli Storage Manager	No later than September 26, 2001	International Business Machines Corporation

In addition, Defendant identifies the following patents, publications, and systems as evidence of the state of the art as it relates to systems and methods for monitoring performance of a storage device:

- Wolf
- Hoffecker
- Bachmat
- D'Errico
- Kamiyama
- Woods
- 33XX Product Manual
- ControlCenter PDG
- ControlCenter TG
- ControlCenter OHV1
- Duggan
- Windows 2000 Device Driver Book
- Lorch
- Koizumi
- Barracuda
- Seagate Barracuda
- Schindler
- Compaq Service Reference Guide
- Compaq Integration Note
- Compaq Management Agents Reference Guide
- Veritas NetBackup 3.4 for NDMP
- Veritas NetBackup 3.4 for Lotus
- Veritas NetBackup 3.4 for Oracle
- Oracle8i Guide
- Shangam
- Davy
- IBM DFSMSdss

- Veritas VxFS 3.4 Guide
- TSM Implementation Guide
- U.S. Patent No. 6,895,485 (“DeKoning”)
- “Disk Shuffling” (“Tati”)
- “Disk Shuffling” (“Ruemmler”)
- U.S. Patent No. 5,506,955 (“Chen ’955”)
- U.S. Patent No. 5,566,317 (“Treiber”)
- U.S. Patent No. 5,684,945 (“Chen ’945”)
- U.S. Patent No. 5,802,069 (“Coulson”)
- U.S. Patent No. 5,859,823 (“Yamamuro”)
- U.S. Patent No. 5,956,750 (“Yamamoto”)
- U.S. Patent No. 6,101,619 (“Shin”)
- U.S. Patent No. 6,223,252 (“Bandera”)
- U.S. Patent No. 6,249,887 (“Gray”)
- U.S. Patent No. 6,289,484 (“Rothberg ’484”)
- U.S. Patent No. 6,327,106 (“Rothberg ’106”)
- U.S. Patent No. 6,401,214 (“Li”)
- U.S. Patent No. 6,408,406 (“Parris”)
- U.S. Patent No. 6,412,089 (“Lenny”)
- U.S. Patent No. 6,460,151 (“Warwick”)
- U.S. Patent No. 6,571,354 (“Parks”)
- U.S. Patent Publication No. 2002/0184580 (“Archibald”)
- “Making Sure Disk Performance Statistics are Collected” (“Microsoft Disk Performance, 2000”)
- “Monitoring Hard Disk Performance” (“i386”)
- “Using th [sic] Performance Monitor” (“Microsoft Performance Monitor, 2000”)
- “Pre-Failure Alerting” (“Dell Alerting”)
- U.S. Patent Application No. 09/589,144 (“Duggan ’144”)
- “Hard Disk Drives” (“IBM HDD”)
- “S.M.A.R.T., Advanced Drive Diagnostics” (“Quantum”)
- “Information Brief: Self-Monitoring, Analysis and Reporting Technology” (“IBM Info Brief”)

- “Playing it Smart” (“Ottem”)
- “Data Lifeguard Online Diagnostics S.M.A.R.T. Test” (“Western Digital, Data Lifeguard”)
- U.S. Patent No. 6,384,999 (“Schibilla”)
- “Windows NT File System Internals” (“Nagar”)
- U.S. Patent No. 4,851,998 (“Hospodor”)
- U.S. Patent No. 5,682,273 (“Hetzler”)
- U.S. Patent No. 5,930,828 (“Jensen”)
- U.S. Patent No. 5,623,598 (“Voigt”)
- U.S. Patent No. 6,370,614 (“Teoman ’614”)
- U.S. Patent No. 6,463,509 (“Teoman ’509”)
- U.S. Patent No. 7,150,018 (“Golds”)
- U.S. Patent Publication No. 2002/0162057 (“Talagala”)
- U.S. Patent No. 5,727,144 (“Brady”)
- U.S. Patent No. 6,324,620 (“Christenson”)
- U.S. Patent No. 5,774,292 (“Georgiou”)
- U.S. Patent No. 5,893,139 (“Kamiyama ’139”)
- “Eastman Chemical Company Adds 40 Terabytes of EMC Storage with No IT Staff Increase” (“Dell PR 06.05.2001”)
- “EMC Introduces Intelligent Open Storage Management Solution” (“Dell PR 07.18.1996”)
- “New EMC ControlCenter Software Delivers Ground Breaking Management of Enterprise Wide Information” (“Dell PR 10.26.1999”)
- “EMC Symmetrix, 23 Years in the making” (“EMC Symmetrix History”)
- “EMC Corporation 1998 Annual Report” (“EMC 1998 Annual Report”)
- Tivoli Storage Manager, Messages, Version 3 Release 7 (“TSM Messages”)
- Deploying the Tivoli Storage Manager Client in a Windows 2000 Environment (“Deploying TSM in Windows 2000”)
- EDMSuite OnDemand for Windows NT, Installing and Configuring Tivoli Storage Manager, Version 2.2 (“Installing and Configuring TSM”)
- Tivoli Storage Manager Version 3.7.3 & 4.1: Technical Guide (“TSM Technical Guide”)

Each of these references show that the concept of intercepting and analyzing communications between a computer system and storage device is not novel, and was well-known in the art for many years. In light of the references discussed herein, the Asserted Claims of the ’832 Patent cannot be valid.

Defendant’s reference to a particular product, device, or software program in these contentions should be interpreted as a reference to the system itself and any corresponding patents, publications, or product literature relating to the cited system. Upon information and belief, the systems were publicly disclosed, used, sold, or offered for sale in the United States before the alleged priority date of the Asserted Claims of the ’832 Patent. Defendant’s investigation of such prior art systems is still ongoing and discovery has not yet been received from third parties who may have information concerning such prior art systems. Accordingly, subsequent discovery may reveal information that affects the disclosures and contentions herein. For example, subsequent discovery may provide additional information regarding whether or not any of the third-party prior art systems anticipate or render obvious the Asserted Claims of the ’832 Patent. As such, Defendant reserves all rights to supplement its Invalidity Contentions.

Many of the inventive, research, design, and development activities concerning these systems and technologies occurred in the United States before the alleged priority date of the Asserted Claims of the ’832 Patent. Defendant has obtained, and is in the process of obtaining, additional information regarding the dates by which the cited products and services were publicly disclosed, used, sold, or offered for sale, the circumstances under which the research, design, and development activities were conducted, and the identities of the particular individuals involved in such activities through publicly available patents, publications, and product literature. The actual dates, circumstances, and identities of individuals will be the subject of third-party discovery

during this lawsuit, which Defendant reserves the right to rely upon to corroborate the prior art status of the prior art identified herein. Defendant reserves the right to modify, amend, or supplement these contentions if additional information becomes available during the course of this lawsuit. Furthermore, Defendant will make all such devices, software programs, or other products in Defendant's possession, custody, or control available for inspection by Plaintiffs.

Consequently, Defendant reserves the right to amend, modify, or supplement these Invalidity Contentions should additional information become available to them through discovery.

B. The '332 Patent

Invalidity claim charts identifying disclosures in the references identified in Table 1-B as to the Asserted Claims of the '332 Patent are provided in attached Exhibits B1-B3. Defendant reserves the right to rely on the inventions described in the below patents and printed publications as being patented or described in a printed publication under pre-AIA §§102(a), (b), and/or (e). Defendant also reserves the right to rely on the inventions described in the below patents and printed publications as evidence that the invention was known by others in this country under pre-AIA §102(a).

Table 1-B: Prior Art Patents and Printed Publications for the '332 Patent

Patent No. or Title (Primary Inventor/Author)	Date of Issue/Publication	Filing Date (If Patent)
U.S. Patent No. 8,595,331 ("Henseler")	Issued November 26, 2013	Filed December 1, 2006
U.S. Patent No. 7,721,277 ("Thyagarajan")	Issued May 18, 2010	Filed June 8, 2004
U.S. Patent No. 7,493,624 ("Kautzleben")	Issued February 17, 2009	Filed December 30, 2003
U.S. Patent Publication No. 2005/0149922 ("Vincent")	Published July 7, 2005	Filed January 6, 2004
"Service-Oriented Ad Hoc Grid Computing" ("Friese")	Published November 15, 2006	N/A

International Patent Publication No. 2006/089411 (“Chevrette”)	Published August 31, 2006	Filed February 21, 2006
“WebSphere Application Server V6 System Management and Configuration Handbook” (“Sadtler”)	Published February 2005	N/A
“IBM WebSphere Application Server, Version 6.0” (“IBM Brochure”)	Published June 2005	N/A
“WebSphere Version 6 Web Services Handbook Development and Deployment” (“Wahli”)	July 2005	N/A
“Anatomy of the Grid”	August 1, 2001	N/A
“Physiology of the Grid”	July 28, 2002	N/A
“Open Grid Services Infrastructure (OGSI) Version 1.0” (“OGSI v1.0”)	June 27, 2003	N/A
“Introduction to Grid Computing” (“Jacob”)	December 2005	N/A
“Globus Toolkit 3 Core – A Grid Service Container Framework” (“Sandholm”)	July 2, 2003	N/A
“The JBoss 4 Application Server Guide” (“JBoss Guide”)	2004	N/A
“Oracle Containers for J2EE Deployment Guide 10g Release 3 (10.1.3)”	January 2006	N/A
Oracle Database New Features Guide 10g Release 1 (10.1)	December 2003	N/A
Oracle Application Server Containers for J2EE Enterprise JavaBeans Developer’s Guide 10g Release 2	November 2004	N/A
Oracle Application Server Containers for J2EE Servlet Developer’s Guide 10g Release 2 (10.1.2)	November 2004	N/A
Oracle Containers for J2EE Developer’s Guide 10g (10.1.3.1.0)	October 2006	N/A
Oracle® Real Application Clusters Deployment and Performance Guide 10g Release 1 (10.1)	December 2003	N/A

Prior art systems were also known, publicly used, sold, or offered for sale prior to then respective Asserted Patents. Invalidity claim charts identifying disclosures in the references identified in Table 2-B as to the Asserted Claims of the ’332 Patent are provided in attached Exhibits B4-B7. Each prior art system was on sale or publicly available at least as early as the date provided, but discovery may reveal even earlier sale or public availability. Defendant further relies on each document describing a system as invalidating prior art itself (*e.g.*, as a printed publication). Defendant further relies on each document describing a system as combined with references in the same manner as disclosed for the system the document describes.

Table 2-A: Prior Art Systems for the ’332 Patent

System	Date of Sale or Public Availability	Seller or Manufacturer Making Information Available and to Whom
IBM WebSphere Application Server V6	No later than December 26, 2006	IBM
JBoss Application Server V4	No later than December 26, 2006	JBoss, Inc.
Globus Toolkit	No later than December 26, 2006	Global Grid Foundation
Oracle 10g	No later than December 26, 2006	Oracle

In addition, Defendant identifies the following patents, publications, and systems as evidence of the state of the art as it relates to hot deployment in a grid computing environment:

- Henseler
- Thyagarajan
- Kautzleben
- Vincent
- Friese
- Sadtler
- IBM Brochure
- Wahli

- “Anatomy of the Grid”
- “Physiology of the Grid”
- OGSI v1.0
- Jacob
- United States Patent No. 7,305,585 (“Marchand”)
- United States Patent No. 8,225,310 (“Robertson”)
- United States Patent Publication No. 2002/0104071 (“Charisius”)
- U.S. Patent Application Publication No. 2003/0225851 (“Fanshier”)
- United States Patent Publication No. 2005/0120353 (“Zhang”)
- United States Patent Publication No. 2005/0138618 (“Gebhart”)
- United States Patent Publication No. 2006/0005181 (“Fellenstein”)
- United States Patent Publication No. 2006/0195688 (“Drissi”)
- United States Patent Publication No. 2007/0028098 (“Baartman”)
- United States Patent Publication No. 2007/0106773 (“Gallino”)
- United States Patent Publication No. 2007/0233827 (“McKnight”)
- U.S. Patent Application Publication No 2007/0143379 (“i Dalfo”)
- United States Patent Publication No. 2008/0123559 (“Haviv”)
- “Towards a Service-Oriented Ad Hoc Grid” (“Smith”)

Each of these references show that the concept of hot deployment in a grid computing environment is not novel, and was well-known in the art for many years. In light of the references discussed herein, the Asserted Claims of the ’332 Patent cannot be valid.

Defendant’s reference to a particular product, device, or software program in these contentions should be interpreted as a reference to the system itself and any corresponding patents, publications, or product literature relating to the cited system. Upon information and belief, the systems were publicly disclosed, used, sold, or offered for sale in the United States before the alleged priority date of the Asserted Claims of the ’332 Patent. Defendant’s investigation of such prior art systems is still ongoing and discovery has not yet been received from third parties who may have information concerning such prior art systems. Accordingly, subsequent discovery may

reveal information that affects the disclosures and contentions herein. For example, subsequent discovery may provide additional information regarding whether or not any of the third party prior art systems anticipate or render obvious the Asserted Claims of the ’332 Patent. As such, Defendant reserves all rights to supplement its Invalidity Contentions.

Many of the inventive, research, design, and development activities concerning these systems and technologies occurred in the United States before the alleged priority date of the Asserted Claims of the ’332 Patent. Defendant has obtained, and is in the process of obtaining, additional information regarding the dates by which the cited products and services were publicly disclosed, used, sold, or offered for sale, the circumstances under which the research, design, and development activities were conducted, and the identities of the particular individuals involved in such activities through publicly available patents, publications, and product literature. The actual dates, circumstances, and identities of individuals will be the subject of third party discovery during this lawsuit, which Defendant reserves the right to rely upon to corroborate the prior art status of the prior art identified herein. Defendant reserves the right to modify, amend, or supplement these contentions if additional information becomes available during the course of this lawsuit. Furthermore, Defendant will make all such devices, software programs, or other products in Defendant’s possession, custody, or control available for inspection by Plaintiffs.

Consequently, Defendant reserves the right to amend, modify, or supplement these Invalidity Contentions should additional information become available to them through discovery.

C. The ’686 Patent

Invalidity claim charts identifying disclosures in the references identified in Table 1-C as to the Asserted Claims of the ’686 Patent are provided in attached Exhibits C1-C4. Defendant reserves the right to rely on the inventions described in the below patents and printed publications as being patented or described in a printed publication under pre-AIA §§102(a), (b), and/or (e).

Defendant also reserves the right to rely on the inventions described in the below patents and printed publications as evidence that the invention was known by others in this country under pre-AIA §102(a).

Table 1-C: Prior Art Patents and Printed Publications for the '686 Patent

Patent No. or Title (Primary Inventor/Author)	Date of Issue/Publication	Filing Date (If Patent)
U.S. Patent No. 7,320,008 ("Colgrove")	Issued January 15, 2008	Filed December 20, 2004
U.S. Patent No. 5,774,715 ("Madany")	Issued June 30, 1998	Filed March 27, 1996
U.S. Patent No. 7,437,530 ("Rajan")	Issued October 14, 2008	Filed April 24, 2003
U.S. Patent No. 6,282,602 ("Blumenau")	Issued August 28, 2001	Filed June 30, 1998
U.S. Patent No. 7,350,085 ("Johnson")	Issued March 25, 2008	Filed April 12, 2001
U.S. Patent Publication No. 2003/0182564 ("Lai")	Published September 25, 2003	Filed May 19, 2002
"CamouflageFS: Increasing the Effective Key Length in Cryptographic Filesystems on the Cheap" ("Locasto")	Published 2004	N/A
"The Design and Implementation of the 4.3BSD UNIX Operating System" ("Leffler")	Published October 1990	N/A
"The Hadoop Distributed File System – Architecture and Design" ("HDFS Whitepaper 2005")	Published 2005	N/A
"The Hadoop Distributed File System: Architecture and Design" ("HDFS Whitepaper 2007")	Published 2007	N/A
"Veritas File System Administrator's Guide, Solaris 5.0" ("VxFS Admin Guide")	Published 2006	N/A

"Veritas Storage Foundation Release Notes, Solaris 5.0 Maintenance Pack 1" ("VxFS Maintenance Pack 1")	Published 2007	N/A

Prior art systems were also known, publicly used, sold, or offered for sale prior to then respective Asserted Patents. Invalidity claim charts identifying disclosures in the references identified in Table 2-C as to the Asserted Claims of the '686 Patent are provided in attached Exhibits C5-C6. Each prior art system was on sale or publicly available at least as early as the date provided, but discovery may reveal even earlier sale or public availability. Defendant further relies on each document describing a system as invalidating prior art itself (*e.g.*, as a printed publication). Defendant further relies on each document describing a system as combined with references in the same manner as disclosed for the system the document describes.

Table 2-C: Prior Art Systems for the '686 Patent

System	Date of Sale or Public Availability	Seller or Manufacturer Making Information Available and to Whom
The Hadoop Distributed File System ("HDFS")	No later than July 30, 2007	The Apache Software Foundation
Veritas File System 5.0 ("VxFS")	No later than July 30, 2007	Veritas Technologies LLC

In addition, Defendant identifies, responsive to Plaintiffs' Infringement Contentions, the following patents, publications, and systems as evidence of the state of the art as it relates to systems and methods for providing data security:

- Colgrove
- Madany
- Rajan
- Blumenau
- Johnson
- Locasto
- Leffler

- Lai
- HDFS Whitepaper 2005
- HDFS Whitepaper 2007
- Veritas Solaris Guide
- Veritas Solaris Maintenance 1
- Veritas File System Administrator's Guide, Linux, 5.0 ("VxFS Admin Guide Linux")
- Veritas File System Programmer's Reference Guide, AIX, 5.0 ("VxFS Programmer Guide AIX")
- Veritas File System Programmer's Reference Guide, HP UX, 5.0 ("VxFS Programmer Guide HP-UX")
- U.S. Patent Publication No. 2002/0078244 ("Howard")
- U.S. Patent Publication No. 2002/0099797 ("Merrell")
- U.S. Patent Publication No. 2002/0120854 ("LeVine")
- U.S. Patent Publication No. 2005/0013441 ("Klein")
- U.S. Patent No. 6,353,837 ("Blumenau '837")
- U.S. Patent No. 7,584,279 ("Chapman")
- WO 03/083670 ("Kaufman")
- "Practical Unix Security" ("Garfinkel")
- "Inside the Windows NT File System" ("Custer")
- "Unix Security: a practical tutorial" ("Arnold")
- U.S. Patent Publication No. 2005/0091487 ("Cross")
- U.S. Patent Publication No. 2007/0168678 ("Meenakshisundaram")
- "Modern Operating Systems" ("Tanenbaum")
- U.S. Patent No. 6,907,457 ("Merrell '457")
- "Design and Implementation of the Second Extended Filesystem" ("Card")
- U.S. Patent Publication No. 2004/0091114 ("Carter")
- "Solaris Internals: Core Kernel Components" ("Maruo")
- U.S. Patent No. 7,024,583 ("Nguyen")
- U.S. Patent No. 7,430,585 ("Sibert")
- U.S. Patent Publication No. 2003/0120938 ("Mullor")
- U.S. Patent Publication No. 2004/0153718 ("Shen")

- U.S. Patent Publication No. 2006/0080520 ("Dickenson")
- U.S. Patent Publication No. 2007/0250719 ("Lai '719")
- U.S. Patent Publication No. 2008/0022396 ("Kado")
- U.S. Patent Publication No. 2008/0034264 ("Kaabouch")
- "A comparative study of structured and un-structured remote data access in distributed computing systems" ("Tang")
- "Design and Implementation of an Energy-Aware File System" ("Scherl")
- Yahoo Hadoop ApacheCon 2008 Presentation ("HDFS ApacheCon 2008 Presentation")

Each of these references show that the concept of monitoring efficiency and controlling power transfer across an inductive power coupling is not novel, and was well-known in the art for many years. In light of the references discussed herein, the Asserted Claims of the '686 Patent cannot be valid.

Defendant's reference to a particular product, device, or software program in these contentions should be interpreted as a reference to the system itself and any corresponding patents, publications, or product literature relating to the cited system. Upon information and belief, the systems were publicly disclosed, used, sold, or offered for sale in the United States before the alleged priority date of the Asserted Claims of the '686 Patent. Defendant's investigation of such prior art systems is still ongoing and discovery has not yet been received from third parties who may have information concerning such prior art systems. Accordingly, subsequent discovery may reveal information that affects the disclosures and contentions herein. For example, subsequent discovery may provide additional information regarding whether or not any of the third party prior art systems anticipate or render obvious the Asserted Claims of the '686 Patent. As such, Defendant reserves all rights to supplement its Invalidity Contentions.

Many of the inventive, research, design, and development activities concerning these systems and technologies occurred in the United States before the alleged priority date of the

Asserted Claims of the ’686 Patent. Defendant has obtained, and is in the process of obtaining, additional information regarding the dates by which the cited products and services were publicly disclosed, used, sold, or offered for sale, the circumstances under which the research, design, and development activities were conducted, and the identities of the particular individuals involved in such activities through publicly available patents, publications, and product literature. The actual dates, circumstances, and identities of individuals will be the subject of third party discovery during this lawsuit, which Defendant reserves the right to rely upon to corroborate the prior art status of the prior art identified herein. Defendant reserves the right to modify, amend, or supplement these contentions if additional information becomes available during the course of this lawsuit. Furthermore, Defendant will make all such devices, software programs, or other products in Defendant’s possession, custody, or control available for inspection by Plaintiffs.

Consequently, Defendant reserves the right to amend, modify, or supplement these Invalidity Contentions should additional information become available to them through discovery.

D. The ’416 Patent

Invalidity claim charts identifying disclosures in the references identified in Table 1-D as to the Asserted Claims of the ’416 Patent are provided in attached Exhibit D1. Defendant reserves the right to rely on the inventions described in the below patents and printed publications as being patented or described in a printed publication under pre-AIA §§102(a), (b), and/or (e). Defendant also reserves the right to rely on the inventions described in the below patents and printed publications as evidence that the invention was known by others in this country under pre-AIA §102(a).

Table 1-D: Prior Art Patents and Printed Publications for the ’416 Patent

Patent No. or Title (Primary Inventor/Author)	Date of Issue/Publication	Filing Date (If Patent)
U.S. Patent Publication No. 2005/0125461 (“Filz”)	Published June 9, 2005	Filed December 8, 2003
U.S. Patent Publication No. 2006/0179058 (“Bram”)	Published August 10, 2006	Filed November 30, 2005
U.S. Patent No. 7,434,041 (“Srivastava”)	Issued October 7, 2008	Filed August 22, 2005
U.S. Patent No. 7,590,653 (“Sparks”)	Issued September 15, 2009	Filed March 2, 2005
U.S. Patent No. 7,937,455 (“Saha”)	Issued May 3, 2011	Filed July 28, 2004
“Using License Use Management Runtime, Version 4.6.7” (4th ed.) (“IBM LUMR Guide”)	Published September 2003	N/A
“Veritas Cluster Server 4.1 User’s Guide” (“Veritas Cluster Server User’s Guide”)	Published March 2005	N/A
“Novell Cluster Services Overview and Installation” (2003) (“Novell 1”)	Published April 2003	N/A
“Novell Cluster Services Overview and Installation” (2001) (“Novell 2”)	Published October 2001	N/A
Novell Cluster Services Licensing (“Novell 3”)	No later than April 25, 2006	N/A
UAL and NetWare Cluster Services (“Novell 4”)	No later than April 25, 2006	N/A

Prior art systems were also known, publicly used, sold, or offered for sale prior to then respective Asserted Patents. Invalidity claim charts identifying disclosures in the references identified in Table 2-D as to the Asserted Claims of the ’416 Patent are provided in attached Exhibits D2-D5. Each prior art system was on sale or publicly available at least as early as the date provided, but discovery may reveal even earlier sale or public availability. Defendant further relies on each document describing a system as invalidating prior art itself (*e.g.*, as a printed publication).

Defendant further relies on each document describing a system as combined with references in the same manner as disclosed for the system the document describes.

Table 2-A: Prior Art Systems for the '416 Patent

System	Date of Sale or Public Availability	Seller or Manufacturer
Borg	No later than April 25, 2006	Google
IBM License Use Management Runtime	No later than April 25, 2006	IBM
Veritas Cluster Server 4.1	No later than April 25, 2006	Veritas
Novell Cluster Services	No later than April 25, 2006	Novell (subsequently acquired by The Attachmate Group, which was subsequently acquired by Micro Focus International, which was subsequently acquired by OpenText)

In addition, Defendant identifies, responsive to Plaintiffs' Infringement Contentions, the following patents, publications, and systems as evidence of the state of the art as it relates to compatibility enforcement in a clustered computing environment:

- Filz
- Bram
- Srivastava
- Sparks
- Saha
- IBM LUMR
- Borg
- Veritas Cluster Server
- Novell Cluster Services
- U.S. Patent No. 6,108,699 ("Moiin")
- Altair PBS Pro

- U.S. Patent Publication No. 2004/0153416 (“Fujimoto”)
- U.S. Patent Publication No. 2014/0207909 (“Yellai”)
- U.S. Patent No. 6,574,612 (“Barrati”)
- U.S. Patent No. 6,807,557 (“Novaes”)
- U.S. Patent No. 6,959,320 (“Shah”)
- U.S. Patent No. 7,096,469 (“Kubala”)
- U.S. Patent Publication No. 2004/0249904 (“Moore”)
- U.S. Patent No. 9,176,785 (“Jackson”)
- Oracle Real Application Clusters
- U.S. Patent Publication No. 2002/0178396 (“Wong”)
- U.S. Patent Publication No. 2005/0204040 (“Ferri”)
- U.S. Patent Publication No. 2004/0249763 (“Vardi”)
- U.S. Patent No. 6,785,713 (“Freeman”)
- U.S. Patent No. 6,788,648 (“Peterson”)
- U.S. Patent No. 7,035,918 (“Redding”)
- U.S. Patent No. 7,711,647 (“Gunaseelan”)
- U.S. Patent No. 8,010,513 (“Zhang”)
- U.S. Patent No. 8,069,119 (“Curren”)
- U.S. Patent Publication No. 2001/0049717 (“Freeman”)
- U.S. Patent Publication No. 2003/0126202 (“Watt”)
- U.S. Patent Publication No. 2003/0144854 (“Macholda”)
- U.S. Patent Publication No. 2003/0187983 (“Rajic”)
- U.S. Patent Publication No. 2003/0233439 (“Stone”)
- U.S. Patent Publication No. 2004/0193861 (“Michaelis”)
- U.S. Patent Publication No. 2005/0022173 (“Kanade”)
- U.S. Patent Publication No. 2005/0234846 (“Davidson”)
- U.S. Patent Publication No. 2006/0036894 (“Bauer”)
- U.S. Patent Publication No. 2006/0282519 (“Trevathan”)
- U.S. Patent Publication No. 2009/0276771 (“Nickolov”)
- U.S. Patent Publication No. 2011/0145328 (“Wang”)
- U.S. Patent Publication No. 2011/0153697 (“Nickolov ’697”)

- U.S. Patent Publication No. 2011/0179112 ("Ravichandran")
- U.S. Patent Publication No. 2011/0251992 ("Bethlehem")
- U.S. Patent Publication No. 2011/0276699 ("Pedersen")
- U.S. Patent Publication No. 2011/0307548 ("Fisk")
- U.S. Patent Publication No. 2012/0011514 ("Burton")
- U.S. Patent No. 7,747,851 ("Robinson")
- U.S. Patent No. 5,745,879 ("Wyman")
- U.S. Patent No. 7,171,662 ("Misra")

Each of these references show that the concept of compatibility enforcement in a clustered computing environment is not novel, and was well-known in the art for many years. In light of the references discussed herein, the Asserted Claims of the '416 Patent cannot be valid.

Defendant's reference to a particular product, device, or software program in these contentions should be interpreted as a reference to the system itself and any corresponding patents, publications, or product literature relating to the cited system. Upon information and belief, the systems were publicly disclosed, used, sold, or offered for sale in the United States before the alleged priority date of the Asserted Claims of the '416 Patent. Defendant's investigation of such prior art systems is still ongoing and discovery has not yet been received from third parties who may have information concerning such prior art systems. Accordingly, subsequent discovery may reveal information that affects the disclosures and contentions herein. For example, subsequent discovery may provide additional information regarding whether or not any of the third party prior art systems anticipate or render obvious the Asserted Claims of the '416 Patent. As such, Defendant reserves all rights to supplement its Invalidity Contentions.

Many of the inventive, research, design, and development activities concerning these systems and technologies occurred in the United States before the alleged priority date of the Asserted Claims of the '416 Patent. Defendant has obtained, and is in the process of obtaining,

additional information regarding the dates by which the cited products and services were publicly disclosed, used, sold, or offered for sale, the circumstances under which the research, design, and development activities were conducted, and the identities of the particular individuals involved in such activities through publicly available patents, publications, and product literature. The actual dates, circumstances, and identities of individuals will be the subject of third party discovery during this lawsuit, which Defendant reserves the right to rely upon to corroborate the prior art status of the prior art identified herein. Defendant reserves the right to modify, amend, or supplement these contentions if additional information becomes available during the course of this lawsuit. Furthermore, Defendant will make all such devices, software programs, or other products in Defendant's possession, custody, or control available for inspection by Plaintiffs.

Consequently, Defendant reserves the right to amend, modify, or supplement these Invalidity Contentions should additional information become available to them through discovery.

V. P.R. 3-3(B) – INVALIDITY GROUNDS

Pursuant to P.R. 3-3(b), Defendant contends that certain prior art references below anticipate one or more Asserted Claims and that to the extent the identified prior art references do not anticipate the Asserted Claims, those claims are invalid as obvious under 35 U.S.C. §103. Each anticipatory prior art reference, either alone or in combination with other prior art, also renders the Asserted Claims invalid as obvious. In particular, each anticipatory prior art reference may be combined with (1) information generally known to persons skilled in the art at the time of the alleged invention, and/or (2) any of the other anticipatory prior art references. To the extent that Plaintiffs contends that any of the anticipatory prior art fails to disclose one or more limitations of the Asserted Claims, Defendant contends that any difference between the reference and the corresponding patent claims would have been obvious to one of ordinary skill in the art. Thus, all anticipation charts should be interpreted as both reflecting anticipation by the reference as well as

invalidity due to single reference obviousness, to the extent that Plaintiffs contends that any limitation is missing.

A. Anticipation

As stated above, Defendant incorporates by reference all other Invalidity Contentions related to the Asserted Patents served on or otherwise provided to Plaintiffs, whether past or future. Defendant contends that certain prior art references anticipate one or more Asserted Claims under 35 U.S.C. § 102, and that to the extent the identified prior art references do not anticipate the Asserted Claims, those claims are invalid as obvious under 35 U.S.C. § 103. Each anticipatory prior art reference disclosed herein, either alone or in combination with other prior art, also renders the Asserted Claims invalid as obvious. In particular, each anticipatory prior art reference may be combined with (1) information generally known to persons skilled in the art at the time of the alleged invention, and/or (2) any of the other anticipatory prior art references. To the extent that Plaintiffs contend that any of the anticipatory prior art fails to disclose one or more limitations of the Asserted Claims, Defendant contends that any difference between the reference and the corresponding patent claims would have been obvious to one of ordinary skill in the art. Thus, Defendant's identification of anticipatory references should be interpreted as both reflecting anticipation by the reference as well as invalidity due to single reference obviousness, to the extent that Stratasys contends that any limitation is missing.

1. The '832 Patent

The Asserted Claims of the '832 Patent are anticipated and/or rendered obvious by prior art. Pursuant to P.R. 3-3(a), Defendant identifies the prior art references that anticipate or render obvious the '832 Patent Asserted Claims in the claim charts of Exhibits A1 through A6, which are hereby incorporated by reference as if fully set forth herein. The claim charts of Exhibits A1-A6 provide an explanation showing how these prior art references teach or suggest each and every element of the '832 Patent Asserted Claims. For each reference or combination of references

suggested by each chart, Defendant indicates whether the prior art renders the claim anticipated and/or obvious pursuant to P.R. 3-3(b).

In addition to contending that the ’832 Patent Asserted Claims are invalid in view of the prior art references cited in the claim charts of Exhibits A1-A6, Defendant further contends that the ’832 Patent Asserted Claims are invalid as anticipated and/or obvious under pre-AIA U.S.C. §§ 102(a), (b), (e), and/or (g) in view of public knowledge and uses and/or offers for sale of products and services related to the subject matter of the cited references. As discovery is ongoing, Defendant continues to investigate these items and reserves the right to amend or supplement these contentions to include additional information or documents regarding such products and/or systems.

Defendant’s reference to a particular device, circuit, or product in the claim charts of Exhibits A1-A6 should be interpreted as a reference to the device, circuit, or product itself and any corresponding patents, publications, or product literature cited in Exhibits A1-A6 that relates to the cited device, circuit, or product. In addition, Defendant may rely on other documents or things that have not yet been located to support its contentions regarding such prior art device(s), circuit(s), or product(s) that are referenced in the charts.

Defendant incorporates by reference, as if set forth fully herein, all prior art cited during the prosecution of the ’832 Patent, all prior art as described in any future *inter partes* review proceedings of the ’832 Patent, and all prior art disclosed during previous litigation proceedings involving the ’832 Patent.

Defendant further identifies and hereby incorporates by reference as if set forth fully herein the prior art references and Invalidity Contentions as described in any Other Valtrus Proceedings wherein Invalidity Contentions have been, or will be, provided regarding the ’832 Patent, its

foreign counterparts, or any parent or child patent of the ’832 Patent. Defendant reserves the right to use any and all portions of the publication, related publications, commercial embodiments of the publication, and other evidence that is discovered in these lawsuits to demonstrate and/or evidence the components, functionality, and capabilities of the devices and systems disclosed in the references charted.

Where Defendant identifies a particular figure in a prior art reference, the identification should be understood to encompass the caption and description of the figure, as well as any text relating to the figure in addition to the figure itself. Similarly, where an identified portion of text refers to a figure or other material, the identification should be understood to include the referenced figure or other material as well. It should be recognized that a person of ordinary skill in the art would generally read a prior art reference as a whole and in the context of other publications, literature, and general knowledge in the field. To understand and interpret any specific statement or disclosure in a prior art reference, a person of ordinary skill in the art would rely upon other information including other publications and general scientific or engineering knowledge. Defendant therefore reserves the right to rely upon other unidentified portions of the prior art references and on other publications and expert testimony to provide context and to aid understanding and interpretation of the identified portions.

Defendant also reserves the right to rely upon other portions of the prior art references, other publications, and the testimony of experts to establish that the alleged inventions would have been obvious to a person of ordinary skill in the art, including the basis of modifying or combining certain cited references. To the extent any limitation is deemed not to be exactly met by an item of prior art, then any purported differences are such that the claimed subject matter as a whole would have been obvious to one skilled in the art at the time of the alleged invention, in view of the state

of the art and knowledge of those skilled in the art. To the extent that an element of an Asserted Claim is not anticipated, the claim is rendered obvious by combination with one or more other prior art references identified in Exhibits A1-A6.

2. The ’332 Patent

The Asserted Claims of the ’332 Patent are anticipated and/or rendered obvious by prior art. Pursuant to P.R. 3-3(a), Defendant identifies the prior art references that anticipate or render obvious the ’332 Patent Asserted Claims in the claim charts of Exhibits B1 through B7, which are hereby incorporated by reference as if fully set forth herein. The claim charts of Exhibits B1-B7 provide an explanation showing how these prior art references teach or suggest each and every element of the ’332 Patent Asserted Claims. For each reference or combination of references suggested by each chart, Defendant indicates whether the prior art renders the claim anticipated and/or obvious pursuant to P.R. 3-3(b).

In addition to contending that the ’332 Patent Asserted Claims are invalid in view of the prior art references cited in the claim charts of Exhibits B1-B7, Defendant further contends that the ’332 Patent Asserted Claims are invalid as anticipated and/or obvious under pre-AIA U.S.C. §§ 102(a), (b), (e), and/or (g) in view of public knowledge and uses and/or offers for sale of products and services related to the subject matter of the cited references. As discovery is ongoing, Defendant continues to investigate these items and reserves the right to amend or supplement these contentions to include additional information or documents regarding such products and/or systems.

Defendant’s reference to a particular device, circuit, or product in the claim charts of Exhibits B1-B7 should be interpreted as a reference to the device, circuit, or product itself and any corresponding patents, publications, or product literature cited in Exhibits B1-B7 that relates to the cited device, circuit, or product. In addition, Defendant may rely on other documents or things

that have not yet been located to support its contentions regarding such prior art device(s), circuit(s), or product(s) that are referenced in the charts.

Defendant incorporates by reference, as if set forth fully herein, all prior art cited during the prosecution of the ’332 Patent, all prior art as described in any future *inter partes* review proceedings of the ’332 Patent, and all prior art disclosed during previous litigation proceedings involving the ’332 Patent.

Defendant further identifies and hereby incorporates by reference as if set forth fully herein the prior art references and Invalidity Contentions as described in any Other Valtrus Proceedings wherein Invalidity Contentions have been, or will be, provided regarding the ’332 Patent, its foreign counterparts, or any parent or child patent of the ’332 Patent. Defendant reserves the right to use any and all portions of the publication, related publications, commercial embodiments of the publication, and other evidence that is discovered in these lawsuits to demonstrate and/or evidence the components, functionality, and capabilities of the devices and systems disclosed in the references charted.

Where Defendant identifies a particular figure in a prior art reference, the identification should be understood to encompass the caption and description of the figure, as well as any text relating to the figure in addition to the figure itself. Similarly, where an identified portion of text refers to a figure or other material, the identification should be understood to include the referenced figure or other material as well. It should be recognized that a person of ordinary skill in the art would generally read a prior art reference as a whole and in the context of other publications, literature, and general knowledge in the field. To understand and interpret any specific statement or disclosure in a prior art reference, a person of ordinary skill in the art would rely upon other information including other publications and general scientific or engineering knowledge.

Defendant therefore reserves the right to rely upon other unidentified portions of the prior art references and on other publications and expert testimony to provide context and to aid understanding and interpretation of the identified portions.

Defendant also reserves the right to rely upon other portions of the prior art references, other publications, and the testimony of experts to establish that the alleged inventions would have been obvious to a person of ordinary skill in the art, including the basis of modifying or combining certain cited references. To the extent any limitation is deemed not to be exactly met by an item of prior art, then any purported differences are such that the claimed subject matter as a whole would have been obvious to one skilled in the art at the time of the alleged invention, in view of the state of the art and knowledge of those skilled in the art. To the extent that an element of an Asserted Claim is not anticipated, the claim is rendered obvious by combination with one or more other prior art references identified in Exhibits B1-B7.

3. The ’686 Patent

The Asserted Claims of the ’686 Patent are anticipated and/or rendered obvious by prior art. Pursuant to P.R. 3-3(a), Defendant identifies the prior art references that anticipate or render obvious the ’686 Patent Asserted Claims in the claim charts of Exhibits C1 through C6, which are hereby incorporated by reference as if fully set forth herein. The claim charts of Exhibits C1-C6 provide an explanation showing how these prior art references teach or suggest each and every element of the ’686 Patent Asserted Claims. For each reference or combination of references suggested by each chart, Defendant indicates whether the prior art renders the claim anticipated and/or obvious pursuant to P.R. 3-3(b).

In addition to contending that the ’686 Patent Asserted Claims are invalid in view of the prior art references cited in the claim charts of Exhibits C1-C6, Defendant further contends that the ’686 Patent Asserted Claims are invalid as anticipated and/or obvious under pre-AIA U.S.C.

§§ 102(a), (b), (e), and/or (g) in view of public knowledge and uses and/or offers for sale of products and services related to the subject matter of the cited references. As discovery is ongoing, Defendant continues to investigate these items and reserves the right to amend or supplement these contentions to include additional information or documents regarding such products and/or systems.

Defendant's reference to a particular device, circuit, or product in the claim charts of Exhibits C1-C6 should be interpreted as a reference to the device, circuit, or product itself and any corresponding patents, publications, or product literature cited in Exhibits C1-C6 that relates to the cited device, circuit, or product. In addition, Defendant may rely on other documents or things that have not yet been located to support its contentions regarding such prior art device(s), circuit(s), or product(s) that are referenced in the charts.

Defendant incorporates by reference, as if set forth fully herein, all prior art cited during the prosecution of the '686 Patent, all prior art as described in any future *inter partes* review proceedings of the '686 Patent, and all prior art disclosed during previous litigation proceedings involving the '686 Patent.

Defendant further identifies and hereby incorporates by reference as if set forth fully herein the prior art references and Invalidity Contentions as described in any Other Valtrus Proceedings wherein Invalidity Contentions have been, or will be, provided regarding the '686 Patent, its foreign counterparts, or any parent or child patent of the '686 Patent. Defendant reserves the right to use any and all portions of the publication, related publications, commercial embodiments of the publication, and other evidence that is discovered in these lawsuits to demonstrate and/or evidence the components, functionality, and capabilities of the devices and systems disclosed in the references charted.

Where Defendant identifies a particular figure in a prior art reference, the identification should be understood to encompass the caption and description of the figure, as well as any text relating to the figure in addition to the figure itself. Similarly, where an identified portion of text refers to a figure or other material, the identification should be understood to include the referenced figure or other material as well. It should be recognized that a person of ordinary skill in the art would generally read a prior art reference as a whole and in the context of other publications, literature, and general knowledge in the field. To understand and interpret any specific statement or disclosure in a prior art reference, a person of ordinary skill in the art would rely upon other information including other publications and general scientific or engineering knowledge. Defendant therefore reserves the right to rely upon other unidentified portions of the prior art references and on other publications and expert testimony to provide context and to aid understanding and interpretation of the identified portions.

Defendant also reserves the right to rely upon other portions of the prior art references, other publications, and the testimony of experts to establish that the alleged inventions would have been obvious to a person of ordinary skill in the art, including the basis of modifying or combining certain cited references. To the extent any limitation is deemed not to be exactly met by an item of prior art, then any purported differences are such that the claimed subject matter as a whole would have been obvious to one skilled in the art at the time of the alleged invention, in view of the state of the art and knowledge of those skilled in the art. To the extent that an element of an Asserted Claim is not anticipated, the claim is rendered obvious by combination with one or more other prior art references identified in Exhibits C1-C6.

4. The ’416 Patent

The Asserted Claims of the ’416 Patent are anticipated and/or rendered obvious by prior art. Pursuant to P.R. 3-3(a), Defendant identifies the prior art references that anticipate or render

obvious the ’416 Patent Asserted Claims in the claim charts of Exhibits D1 through D5, which are hereby incorporated by reference as if fully set forth herein. The claim charts of Exhibits D1-D5 provide an explanation showing how these prior art references teach or suggest each and every element of the ’416 Patent Asserted Claims. For each reference or combination of references suggested by each chart, Defendant indicates whether the prior art renders the claim anticipated and/or obvious pursuant to P.R. 3-3(b).

In addition to contending that the ’598 Patent Asserted Claims are invalid in view of the prior art references cited in the claim charts of Exhibits D1-D5, Defendant further contends that the ’416 Patent Asserted Claims are invalid as anticipated and/or obvious under pre-AIA U.S.C. §§ 102(a), (b), (e), and/or (g) in view of public knowledge and uses and/or offers for sale of products and services related to the subject matter of the cited references. As discovery is ongoing, Defendant continues to investigate these items and reserves the right to amend or supplement these contentions to include additional information or documents regarding such products and/or systems.

Defendant’s reference to a particular device, circuit, or product in the claim charts of Exhibits D1-D5 should be interpreted as a reference to the device, circuit, or product itself and any corresponding patents, publications, or product literature cited in Exhibits D1-D5 that relates to the cited device, circuit, or product. In addition, Defendant may rely on other documents or things that have not yet been located to support its contentions regarding such prior art device(s), circuit(s), or product(s) that are referenced in the charts.

Defendant incorporates by reference, as if set forth fully herein, all prior art cited during the prosecution of the ’416 Patent, all prior art as described in any future *inter partes* review

proceedings of the ’416 Patent, and all prior art disclosed during previous litigation proceedings involving the ’416 Patent.

Defendant further identifies and hereby incorporates by reference as if set forth fully herein the prior art references and Invalidity Contentions as described in any Other Valtrus Proceedings wherein Invalidity Contentions have been, or will be, provided regarding the ’416 Patent, its foreign counterparts, or any parent or child patent of the ’416 Patent. Defendant reserves the right to use any and all portions of the publication, related publications, commercial embodiments of the publication, and other evidence that is discovered in these lawsuits to demonstrate and/or evidence the components, functionality, and capabilities of the devices and systems disclosed in the references charted.

Where Defendant identifies a particular figure in a prior art reference, the identification should be understood to encompass the caption and description of the figure, as well as any text relating to the figure in addition to the figure itself. Similarly, where an identified portion of text refers to a figure or other material, the identification should be understood to include the referenced figure or other material as well. It should be recognized that a person of ordinary skill in the art would generally read a prior art reference as a whole and in the context of other publications, literature, and general knowledge in the field. To understand and interpret any specific statement or disclosure in a prior art reference, a person of ordinary skill in the art would rely upon other information including other publications and general scientific or engineering knowledge. Defendant therefore reserves the right to rely upon other unidentified portions of the prior art references and on other publications and expert testimony to provide context and to aid understanding and interpretation of the identified portions.

Defendant also reserves the right to rely upon other portions of the prior art references, other publications, and the testimony of experts to establish that the alleged inventions would have been obvious to a person of ordinary skill in the art, including the basis of modifying or combining certain cited references. To the extent any limitation is deemed not to be exactly met by an item of prior art, then any purported differences are such that the claimed subject matter as a whole would have been obvious to one skilled in the art at the time of the alleged invention, in view of the state of the art and knowledge of those skilled in the art. To the extent that an element of an Asserted Claim is not anticipated, the claim is rendered obvious by combination with one or more other prior art references identified in Exhibits D1-D5.

B. Obviousness

As stated above, Defendant incorporates by reference all other Invalidity Contentions related to the Asserted Patents served on or otherwise provided to Plaintiffs, whether past or in the future. In addition to certain claims being anticipated at least under Plaintiffs' apparent claim constructions as indicated above, the Asserted Claims are also invalid as obvious over the same teachings identified for anticipation. Further, the Asserted Claims are obvious over various combinations of the references shown in the claim charts accompanying or incorporated by reference into this disclosure. No Asserted Claim goes beyond combining known elements to achieve predictable results or does more than choose between clear alternatives known to those of skill in the art. Thus, to the extent that an Asserted Claim is not anticipated, it is nevertheless invalid as obvious. Specifically, Defendant asserts that any charted or incorporated reference in combination with one or more other charted or incorporated references renders the Asserted Claims obvious.

Motivations to combine, as well as the general state of the art, may be found in a variety of places including in the references defined above, and the specification of the Asserted Patents.

A person of ordinary skill in the art at the time of the alleged invention would have been motivated to combine any one piece of identified prior art with any other identified piece of prior art. For at least this reason, it would have been obvious to a person of skill in the art at the time of the alleged invention of the Asserted Claims to combine the various references cited herein so as to practice the Asserted Claims and there is a motivation in the art to make such a combination.

Motivations to combine various prior art references are present in the references themselves, the common knowledge of one of ordinary skill in the art, the prior art as a whole, or the nature of the problems allegedly addressed by the Asserted Patents. Further reasons to combine the references identified in these charts include the nature of the problem being solved, the express, implied, and/or inherent teachings of the prior art, the knowledge of persons of ordinary skill in the art, the fact that the prior art is generally directed towards the same general methods and systems, that such combinations would have yielded predictable results, and that such combinations would have represented known alternatives to a person of ordinary skill in the art.

In *KSR International Co. v. Teleflex, Inc.*, the United States Supreme Court held that, among other things, "[t]he combination of familiar elements according to known methods is likely to be obvious when it does no more than yield predictable results." 127 S. Ct. 1727, 1739 (2007); *see also id.* at 1731 ("[A] court must ask whether the improvement is more than the predictable use of prior art elements according to their established functions."). In particular, a patent is obvious where "the content of the prior art, the scope of the patent claim, and the level of ordinary skill are not in material dispute, and the obviousness of the claim is apparent in light of these factors." *Id.* at 1745–46. The Supreme Court found that "if a technique has been used to improve one device, and a person of ordinary skill in the art would recognize that it would improve similar

devices in the same way, using the technique is obvious unless its actual application is beyond his or her skill." *Id.* at 1731.

Moreover, the Supreme Court recognizes that market pressures will motivate a person of ordinary skill to survey known art for solutions to problems. *Id*. at 1732 ("When there is a design need or market pressure to solve a problem and there are a finite number of identified, predictable solutions, a person of ordinary skill in the art has good reason to pursue the known options within his or her technical grasp."). When a person of ordinary skill uses an identified, predictable solution to solve a problem, "it is likely the product not of innovation but of ordinary skill and common sense." *Id*.

In addition, when a work is available in one field of endeavor, design incentives and other market forces can prompt variations of it, either in the same field or a different one. *Id*. at 1740. If a person of ordinary skill can implement a predictable variation, U.S.C. § 103 bars its patentability. *Id*. The rationale to combine or modify prior art references is significantly stronger when references seek to solve similar problems, come from the same field, and correspond well. *In re Inland Steel Co.*, 265 F.3d 1354, 1362 (Fed. Cir. 2001).

Although the law does not require evidence of motivation to combine, motivation exists to combine one or more of the references disclosed herein with each other. In addition to the specific motivations identified herein, motivation to modify a particular reference or to combine any two or more of the identified references comes from (a) the nature of the problem being solved, (b) the teachings of the prior art, (c) the knowledge of persons of ordinary skill in the art, (d) the fact that all of the references teach systems, apparatuses, and methods related to the subject matter and address the same technical issues described in the Asserted Patents, and (e) one would be motivated by considerations of efficiency, effectiveness, convenience, cost-savings, and accessibility, to

combine the various teachings. Additionally, one would be motivated to address the alleged problems or achieve the purported objectives identified in the Background sections of the Asserted Patents.

To the extent not anticipated, the Asserted Claims represent no more than the result of ordinary innovation over the prior art. Moreover, no showing of a specific motivation to combine prior art is required to combine the references disclosed above and in the attached charts, as each combination of art would have no unexpected results, and at most would simply represent a known alternative to one of skill in the art. *See KSR*, 127 S. Ct. at 1739-40 (rejecting the Federal Circuit's "rigid" application of the teaching, suggestion, or motivation to combine test, instead espousing an "expansive and flexible" approach). Indeed, the Supreme Court held that a person of ordinary skill in the art is "a person of ordinary creativity, not an automaton" and "in many cases a person of ordinary skill in the art will be able to fit the teachings of multiple patents together like pieces of a puzzle." *Id.* at 1742. Nevertheless, in keeping with the Local Patent Rules, and in addition to the information contained in the section immediately above and elsewhere in these contentions, additional motivation and reason to combine the cited art are identified. A person having ordinary skill in any or all of these fields would be aware of all prior art in those fields, including but not limited to the identified prior art references and systems, and would have been motivated to combine the teachings of prior art with the field.

In sum, motivations to modify or combine the identified references including the references listed above can be found via, for example, discussions in the cited references, the state of the art discussed in the references, and the knowledge of one of ordinary skill in the art. One of ordinary skill in the art would have been motivated to combine these references, because these references relate to common objectives and subject matter. The references share commonalities in terms of

their general subject matter as well as the types of equipment, products, systems, and/or methods used. Further, the prior art references explicitly or implicitly reference other prior art references, share common authors or inventors, were published in the same journals, were compiled by a common author of a compilation or reference book, were presented at the same conferences, and/or were developed at common companies, schools, or organizations which would motivate one of skill in the art to combine them. These references are within the field of the Asserted Patents and are directed to similar subject matter within the field. Additionally, the references, and any products, devices, or processes described in the references, existed and/or were invented in the same time period providing further motivation for combination. These disclosures were provided without prejudice to any arguments or objections concerning the relevance of motivation to combine in connection with any Invalidity Contentions.

Defendant reserves the right to further specify the motivations to combine the prior art in response to positions that Plaintiffs may take later in this case and as discovery, including third party discovery, proceeds. Defendant may rely on any and all portions of the prior art, other documents, and expert testimony to establish that a person of ordinary skill in the art would have been motivated to modify or combine the prior art so as to render the claims invalid as obvious. Moreover, Defendant reserves the right to rely on later identified sources of information, including but not limited to witness testimony and other discovery, to establish the state of the art in the relevant time frame pertaining to the Asserted Patents.

While Defendant reserves the right to rely on any combination of the references reflected in its charts or incorporated herein by reference, Defendant provides the following exemplary and non-exhaustive references and/or combinations evidencing invalidity of the claims of the Asserted Patents. The combinations of prior art listed below render obvious the Asserted Claims under the

proper construction of the claims and/or under Plaintiffs' apparent interpretation of the claims as set forth by Plaintiffs in its Complaint and Infringement Contentions.

1. The '832 Patent

Pursuant to P.R. 3-3(a) and (b), Defendant identifies in Exhibits A1-A6 the prior art references that render obvious the Asserted Claims of the '832 Patent and include below exemplary combinations showing the obviousness of the '832 Patent Asserted Claims in view of the prior art. To the extent Plaintiffs contends that an element is not disclosed in any one of the anticipatory references described in Exhibits A1-A6, the limitation would have been obvious in light of the disclosures within the reference and the knowledge of one of skill in the art at the time of the '832 Patent. Moreover, to the extent Plaintiffs contends that an element is not disclosed in any one of the anticipatory references described in Exhibits A1-A6, such reference may be combined with any other references listed in Exhibits A1-A6 for such element, thereby rendering the claims invalid for obviousness.

To the extent a finder of fact determines that a limitation of any of the '832 Patent Asserted Claims is not disclosed by one of the references identified above pursuant to P.R. 3-3(a), the claim is nevertheless unpatentable as obvious because they contain nothing that constitutes a patentable innovation. To the extent a finder of fact determines that a limitation of the '832 Patent Asserted Claims is not anticipated, it does not go beyond combining familiar elements according to known methods to achieve predictable results or does more than choose between clear alternatives known to those of ordinary skill in the art.

(a) Obviousness Rationale

For at least the reasons described in these contentions, it would have been obvious to one of ordinary skill in the art to combine any of a number of prior art references, including any combination of those prior art references identified in Exhibits A1-A6 along with the knowledge

of one of ordinary skill in the art to meet the limitations of the ’832 Patent Asserted Claims. Moreover, as mentioned above, Defendant has not yet completed its search or discovery concerning additional prior art. As such, Defendant’s inclusion of exemplary combinations does not preclude them from identifying other invalidating combinations as appropriate, and Defendant reserves the right to identify additional specific combinations as well as to detail and explain such combinations.

To the extent not anticipated, the ’832 Patent Asserted Claims represent no more than the result of ordinary variations of the prior art. Defendant further believes that no showing of a specific motivation to combine prior art is required to combine the references disclosed above and in the attached charts, as each combination of art would have no unexpected results, and at most would simply represent a known alternative to one of skill in the art. *See KSR Int’l Co. v. Teleflex, Inc.*, 550 U.S. 398, 415-16 (2007) (rejecting the Federal Circuit’s “rigid” application of the teaching, suggestion, or motivation to combine test, instead espousing an “expansive and flexible” approach). Indeed, the Supreme Court held that a person of ordinary skill in the art is “a person of ordinary creativity, not an automaton” and “in many cases a person of ordinary skill in the art will be able to fit the teachings of multiple patents together like pieces of a puzzle.” *Id.* at 420-21. Nevertheless, in addition to the information contained elsewhere in these contentions, Defendant identifies motivation and reason to combine the cited art.

One or more combinations of the prior art references identified in Exhibits A1-A6 would have been obvious because these references would have been combined using: known methods to yield predictable results; known techniques in the same way; a simple substitution of one known, equivalent element for another to obtain predictable results; and/or a teaching, suggestion, or motivation in the prior art generally. In addition, it would have been obvious to try combining the

prior art references identified above because there were only a finite number of predictable solutions and/or because known work in one field of endeavor prompted variations based on predictable design incentives and/or market forces either in the same field or a different one. Further, the combinations of the prior art references identified in Exhibits A1-A6 would have been obvious because the combinations represent known potential options with a reasonable expectation of success.

Additional evidence that there would have been a motivation to combine the prior art references identified above includes the interrelated teachings of multiple prior art references; common authorship; the effects of demands known to the design community or present in the marketplace; the existence of a known problem for which there was an obvious solution encompassed by the ’832 Patent Asserted Claims; the existence of a known need or problem in the field of the endeavor at the time of the alleged invention(s); and the background knowledge that would have been possessed by a person having ordinary skill in the art.

Thus, the motivation to combine the teachings of the prior art references disclosed in Exhibits A1-A6 is found in the references themselves and also in: (1) the nature of the problem being solved; (2) the express, implied and inherent teachings of the prior art; (3) the knowledge of persons of ordinary skill in the art; (4) the predictable results obtained in combining the different elements of the prior art; (5) the predictable results obtained in simple substitution of one known element for another; (6) the use of a known technique to improve similar devices, methods, or products in the same way; (7) the predictable results obtained in applying a known technique to a known device, method, or product ready for improvement; (8) the finite number of identified predictable solutions that had a reasonable expectation of success; and (9) known work in various

technological fields that could be applied to the same or different technological fields based on design incentives or other market forces.

Additionally, it would be obvious to one of skill in the art to consult and/or combine any of the prior art listed in Exhibits A1-A6 because all of these references relate to the same area of technology and/or are from analogous art.

The ’832 Patent relates to an apparatus and method for monitoring performance of a storage device. ’832 Patent at Abstract. The patent’s background section explains: “The performance of a storage device, whether attached or remote, depends on a number of factors, such as the extent of use, type of use, etc. Over time and with use, the performance of the storage device may decline or even fail altogether. Declining performance and/or complete failure of a storage device may result in lost data, time and money, not to mention frustration for anyone needing access to the data stored thereon. In addition, when a storage device fails altogether, the data on the failed device may be irretrievable.” *Id.* at 1:27-36. The ’832 patent thus discusses systems and methods for monitoring performance of a storage device before failure occurs.

Figure 1 of the ’832 Patent (below) is a diagram including a computer system 100 including an operating system 110. *Id.* at 3:39-44. The diagram also shows a storage device 150 and a filter driver 130 “for intercepting 140 communications (e.g., write commands 160, read commands 165) between the computer system 100 (e.g., the operating system 110, an application 120) and the storage device 150” and intercepting “145 errors or failures 170 reported by the storage device 150

FIG. 1

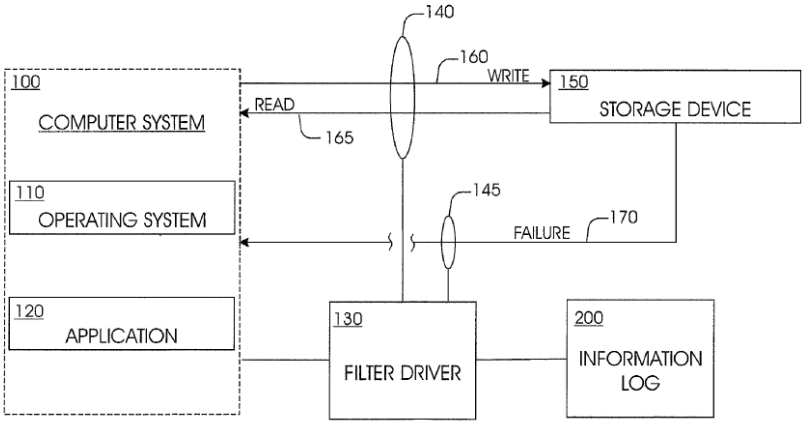

to the computer system 100." *Id.* at 3:44-53. The information from the intercepted communications, and other information related thereto, may be stored in an information log 200 for analysis. *Id.* at 3:53-58.

The intercepted communications may be compared to a known or predicted failure of the storage device 150. *Id.* at 6:3-15. The failure may be known based on past performance of comparable storage devices or predicted based on statistical analysis of the logged information. *Id.* A performance threshold may be determined based on the known or predicted failure, and when the analysis of the intercepted communications indicates that the performance of the storage device 150 is approximately at the performance threshold, a response may be initiated to prevent, or reduce the risk of, loss of the data. *Id.* at 6:16-36. In addition, the patent purports to disclose a method of storage device performance monitoring that comprises "intercepting communications between the storage device and a computer system; analyzing the intercepted communications relative to a threshold value for the performance of the storage device; and responding to a decline in the performance of the storage device based on the analyzed communications." *Id.* at 2:49-55.

The '832 Patent Asserted Claims are all directed to a method of intercepting communications between a storage device and computer system, analyzing those communications, and taking some action in response to those analyzed communications to enhance the performance of the storage device in response to that analysis. The '832 Patent Asserted Claims thus all merely unite old elements, well known in the field, with no change in their respective function or result.

Given the interrelated teachings of the prior art, the effects of demands known to the design community or present in the marketplace, and the background knowledge possessed by a person having ordinary skill in the art, it would have been obvious for one of ordinary skill in the art to combine these familiar elements, disclosed and/or embodied in the prior art listed above to practice the '832 Patent Asserted Claims. The identified references are in the same or similar technical fields, address the same technical issues, and suggest similar solutions. Indeed, the need for need for monitoring the performance of a storage device and taking corrective action was already recognized in the prior art and the field of the invention and would have provided a person of

ordinary skill in the art motivation to combine the prior art references identified as to this patent. Such technology, at least partially based on, but not limited by, the claim constructions implicit in Plaintiffs' Infringement Contentions, was widely known before the alleged priority date of the '832 Patent, as evidenced by the references in Exhibits A1-A6. *See, e.g.*, Wolf '363 at Abstract ("Method and apparatus for use in a computer having peripheral data storage, to monitor data transfers to detect defective or marginally defective storage areas"; "An analysis program retrieves the log entries, clears the log for future entries, adds the entries to a history of the storage, and applies algorithms to the history to determine whether storage areas are defective. It also takes remedial action such as marking a defective storage area bad and relocating the data to a usable area."); D'Errrico '503 at Abstract ("A method and apparatus for managing data storage in a computer system including a host computer and a storage system that stores data accessed by the host computer. A performance condition that impacts system performance is detected, and in response thereto, the data within the storage system is reconfigured to improve system performance."); Hoffecker '505 at 1:7-16 ("This intelligent storage manager both monitors the data retrieval efficiency of the computer system memory and either modifies data set storage locations, or system storage configurations, in response to memory performance conflicts detected in the computer system memory to optimize the level of service provided to the user."). As shown by these exemplary references, and the other references identified above and in the accompanying claim charts, there were common objectives and solutions that predated the patent, such that a person of ordinary skill in the art would have been motivated to combine these and other references.

In addition, market forces demanded that computer systems monitor storage device performance to prevent disruption and data loss. Thus, one of skill in the art would have been motivated to combine or modify references using known methods that one of skill in the art would have recognized as offering improvements to solutions at the time. The identified prior art references describe solutions that were known to offer improvements and, accordingly, one of skill

in the art would have been motivated to combine or modify combined references to include such improvements.

The ’832 patent acknowledges that prior art solutions for “intercepting” communications between a computer system and storage device existed in the art. “Mechanisms that allow applications to intercept such calls may be provided for use with operating systems, such as Unix and Microsoft WINDOWS(R) operating systems. For example, see co-owned U.S. patent application Ser. No. 09/589,144 for “Efficient, Real-Time Management of Storage Resources', filed Jun. 7, 2000, of Duggan, et al., hereby incorporated by reference for all that it discloses.” 832 patent, 4:9-16. *See also, e.g.*, Wolf ’363 at 7:38-49; D'Errico ’503 at 11:7-23, 17:39–59; TSM Implementation Guide at 229, 236.

It was also well-known to one of skill in the art before the time of the ’832 Patent, at least partially based on, but not limited by, the claim constructions implicit in Plaintiffs’ Infringement Contentions, to analyze such intercepted communications, including as compared to a threshold. *See, e.g.*, Wolf ’363 at Abstract, 20:24-41, 24:1-11; Koizumi at [0028]-[0036]; Woods ’311 at 13:52-62, 14:27-44; TSM Implementation Guide at 229, 81-88. And it was similarly well known in the art to respond to a decline in the performance of said storage device based on said analyzed intercepted communications by performing some corrective action, such as moving data, backing up data, or performing defragmentation of a storage device. *See, e.g.* Wolf ’363 at Abstract, 17:4-14; Woods ’311 at Abstract, 19:39-20:44, 18:32-19:38; TSM Implementation Guide at 229, 81-86.

In accordance with these advances, the prior art could have been combined according to methods known to those of ordinary skill within the field of the Asserted Patent to yield predictable results. The substitution of one element in storage device monitoring system could have been predictably achieved by one of ordinary skill at the time of the alleged invention. One of ordinary skill in the art would have been aware of these various applications, including systems and methods for controlling inductive power transmission, and would have been able to select appropriate

attributes of one for inclusion in another. Those of ordinary skill in the art could have employed known techniques to improve similar prior art devices in the same way as claimed in the ’370 Patent.

Any reference or combination of references that anticipates or makes obvious an asserted independent claim also makes obvious any asserted claim dependent on that independent claim, as the element of each dependent ’832 Patent Asserted Claim was known by a person of ordinary skill at the time of the alleged invention, at least partially based on, but not limited by, the claim constructions implicit in Plaintiffs’ Infringement Contentions, and it would have been obvious to combine those known elements with the independent claims at least as a matter of common sense and routine innovation. Accordingly, Defendant contends that each Asserted Claim would have been obvious not only by the combinations described in these contentions, but also by any combination of references that renders obvious an Asserted Claim.

In addition to the specific examples of motivation provided above, Defendant reserves the right to rely on the disclosures of the references listed in Exhibits A1-A6 for additional motivation to combine. The above-identified examples of combinations are given merely to illustrate various motivations to combine and are not intended to provide an exhaustive list of every possible combination to which the motivation may apply. Defendant reserves the right to contend that the above-described motivations to combine apply to other combinations at the appropriate time, i.e., in expert reports regarding invalidity.

For at least the reasons described above, it would have been obvious to one of ordinary skill in the art to combine each prior art reference listed in Exhibits A1-A6 with any other reference or references listed in Exhibits A1-A6 along with the knowledge of one of ordinary skill in the art to arrive at the inventions claims in the ’832 Patent. For example, and without limitation, the

Asserted Claims of the ’832 Patent would have been obvious to one of ordinary skill in the art in view of the following combinations:

- Wolf
- Wolf + Duggan
- Wolf + Duggan + one or more of Barracuda, Seagate Barracuda, and Schindler
- Wolf + Duggan + one or more of Compaq Service Reference Guide, Compaq Integration Note, and Compaq Management Agents Reference Guide
- Wolf + Duggan + Kamiyama
- Wolf + Duggan + Kamiyama + one or more of Barracuda, Seagate Barracuda, and Schindler
- Wolf + Duggan + Kamiyama + one or more of Compaq Service Reference Guide, Compaq Integration Note, and Compaq Management Agents Reference Guide
- Wolf + Duggan + Woods
- Wolf + Duggan + Woods + one or more of Barracuda, Seagate Barracuda, and Schindler
- Wolf + Duggan + Woods + one or more of Compaq Service Reference Guide, Compaq Integration Note, and Compaq Management Agents Reference Guide
- Wolf + Windows 2000 Device Driver Book
- Wolf + Windows 2000 Device Driver Book + one or more of Barracuda, Seagate Barracuda, and Schindler
- Wolf + Windows 2000 Device Driver Book + one or more of Compaq Service Reference Guide, Compaq Integration Note, and Compaq Management Agents Reference Guide
- Wolf + Windows 2000 Device Driver Book + Kamiyama
- Wolf + Windows 2000 Device Driver Book + Kamiyama + one or more of Barracuda, Seagate Barracuda, and Schindler
- Wolf + Windows 2000 Device Driver Book + Kamiyama + one or more of Compaq Service Reference Guide, Compaq Integration Note, and Compaq Management Agents Reference Guide
- Wolf + Windows 2000 Device Driver Book + Woods
- Wolf + Windows 2000 Device Driver Book + Woods + one or more of Barracuda, Seagate Barracuda, and Schindler
- Wolf + Windows 2000 Device Driver Book + Woods + one or more of Compaq Service Reference Guide, Compaq Integration Note, and Compaq Management Agents Reference Guide
- Wolf + Lorch
- Wolf + Lorch + one or more of Barracuda, Seagate Barracuda, and Schindler
- Wolf + Lorch + one or more of Compaq Service Reference Guide, Compaq Integration Note, and Compaq Management Agents Reference Guide
- Wolf + Lorch + Kamiyama
- Wolf + Lorch + Kamiyama + one or more of Barracuda, Seagate Barracuda, and Schindler
- Wolf + Lorch + Kamiyama + one or more of Compaq Service Reference Guide, Compaq Integration Note, and Compaq Management Agents Reference Guide
- Wolf + Lorch + Woods
- Wolf + Lorch + Woods + one or more of Barracuda, Seagate Barracuda, and Schindler

- Wolf + Lorch + Woods + one or more of Compaq Service Reference Guide, Compaq Integration Note, and Compaq Management Agents Reference Guide
- Wolf + Koizumi
- Wolf + Koizumi + one or more of Barracuda, Seagate Barracuda, and Schindler
- Wolf + Koizumi + one or more of Compaq Service Reference Guide, Compaq Integration Note, and Compaq Management Agents Reference Guide
- Wolf + Koizumi + Kamiyama
- Wolf + Koizumi + Kamiyama + one or more of Barracuda, Seagate Barracuda, and Schindler
- Wolf + Koizumi + Kamiyama + one or more of Compaq Service Reference Guide, Compaq Integration Note, and Compaq Management Agents Reference Guide
- Wolf + Koizumi + Woods
- Wolf + Koizumi + Woods + one or more of Barracuda, Seagate Barracuda, and Schindler
- Wolf + Koizumi + Woods + one or more of Compaq Service Reference Guide, Compaq Integration Note, and Compaq Management Agents Reference Guide
- Wolf + Kamiyama
- Wolf + Kamiyama + one or more of Barracuda, Seagate Barracuda, and Schindler
- Wolf + Kamiyama + one or more of Compaq Service Reference Guide, Compaq Integration Note, and Compaq Management Agents Reference Guide
- Wolf + Woods
- Wolf + Woods + one or more of Barracuda, Seagate Barracuda, and Schindler
- Wolf + Woods + one or more of Compaq Service Reference Guide, Compaq Integration Note, and Compaq Management Agents Reference Guide
- Wolf + one or more of Barracuda, Seagate Barracuda, and Schindler
- Wolf + one or more of Compaq Service Reference Guide, Compaq Integration Note, and Compaq Management Agents Reference Guide
- Wolf + one or more of D'Errico and Hoffecker
- Wolf + one or more of Veritas NetBackup 3.4 for NDMP, Veritas NetBackup 3.4 for Lotus, Veritas NetBackup 3.4 for Oracle, Oracle8i Guide, Shangam, and Davy
- Hoffecker
- Hoffecker + one or more of Duggan, Windows 2000 Device Driver Book, Lorch, and Koizumi
- Hoffecker + one or more of Kamiyama and Woods
- Hoffecker + one or more of Duggan, Windows 2000 Device Driver Book, Lorch, and Koizumi + one or more of Kamiyama and Woods
- Hoffecker + one or more of Barracuda, Seagate Barracuda, and Schindler
- Hoffecker + one or more of Duggan, Windows 2000 Device Driver Book, Lorch, and Koizumi + one or more of Barracuda, Seagate Barracuda, and Schindler
- Hoffecker + one or more of Kamiyama and Woods + one or more of Barracuda, Seagate Barracuda, and Schindler
- Hoffecker + one or more of Duggan, Windows 2000 Device Driver Book, Lorch, and Koizumi + one or more of Kamiyama and Woods + one or more of Barracuda, Seagate Barracuda, and Schindler
- Hoffecker + one or more of Compaq Service Reference Guide, Compaq Integration Note, and Compag Management Agents Reference Guide

- Hoffecker + one or more of Duggan, Windows 2000 Device Driver Book, Lorch, and Koizumi + one or more of Compaq Service Reference Guide, Compaq Integration Note, and Compag Management Agents Reference Guide
- Hoffecker + one or more of Kamiyama and Woods + one or more of Compaq Service Reference Guide, Compaq Integration Note, and Compag Management Agents Reference Guide
- Hoffecker + one or more of Duggan, Windows 2000 Device Driver Book, Lorch, and Koizumi + one or more of Kamiyama and Woods + one or more of Compaq Service Reference Guide, Compaq Integration Note, and Compag Management Agents Reference Guide
- Hoffecker + one or more of D'Errico and Hoffecker
- Hoffecker + one or more of Duggan, Windows 2000 Device Driver Book, Lorch, and Koizumi + one or more of D'Errico and Hoffecker
- Hoffecker + one or more of Kamiyama and Woods + one or more of D'Errico and Hoffecker
- Hoffecker + one or more of Duggan, Windows 2000 Device Driver Book, Lorch, and Koizumi + one or more of Kamiyama and Woods + one or more of D'Errico and Hoffecker
- Hoffecker + one or more of Veritas NetBackup 3.4 for NDMP, Veritas NetBackup 3.4 for Lotus, Veritas NetBackup 3.4 for Oracle, Oracle8i Guide, Shangam, and Davy
- Hoffecker + one or more of Duggan, Windows 2000 Device Driver Book, Lorch, and Koizumi + one or more of Veritas NetBackup 3.4 for NDMP, Veritas NetBackup 3.4 for Lotus, Veritas NetBackup 3.4 for Oracle, Oracle8i Guide, Shangam, and Davy
- Hoffecker + one or more of Kamiyama and Woods + one or more of Veritas NetBackup 3.4 for NDMP, Veritas NetBackup 3.4 for Lotus, Veritas NetBackup 3.4 for Oracle, Oracle8i Guide, Shangam, and Davy
- Hoffecker + one or more of Duggan, Windows 2000 Device Driver Book, Lorch, and Koizumi + one or more of Kamiyama and Woods + one or more of Veritas NetBackup 3.4 for NDMP, Veritas NetBackup 3.4 for Lotus, Veritas NetBackup 3.4 for Oracle, Oracle8i Guide, Shangam, and Davy
- Bachmat
- Bachmat + one or more of Duggan, Windows 2000 Device Driver Book, Lorch, and Koizumi
- Bachmat + one or more of Kamiyama and Woods
- Bachmat + one or more of Duggan, Windows 2000 Device Driver Book, Lorch, and Koizumi + one or more of Kamiyama and Woods
- Bachmat + one or more of Barracuda, Seagate Barracuda, and Schindler
- Bachmat + one or more of Duggan, Windows 2000 Device Driver Book, Lorch, and Koizumi + one or more of Barracuda, Seagate Barracuda, and Schindler
- Bachmat + one or more of Kamiyama and Woods + one or more of Barracuda, Seagate Barracuda, and Schindler
- Bachmat + one or more of Duggan, Windows 2000 Device Driver Book, Lorch, and Koizumi + one or more of Kamiyama and Woods + one or more of Barracuda, Seagate Barracuda, and Schindler
- Bachmat + one or more of Compaq Service Reference Guide, Compaq Integration Note, and Compag Management Agents Reference Guide

- Bachmat + one or more of Duggan, Windows 2000 Device Driver Book, Lorch, and Koizumi + one or more of Compaq Service Reference Guide, Compaq Integration Note, and Compag Management Agents Reference Guide
- Bachmat + one or more of Kamiyama and Woods + one or more of Compaq Service Reference Guide, Compaq Integration Note, and Compag Management Agents Reference Guide
- Bachmat + one or more of Duggan, Windows 2000 Device Driver Book, Lorch, and Koizumi + one or more of Kamiyama and Woods + one or more of Compaq Service Reference Guide, Compaq Integration Note, and Compag Management Agents Reference Guide
- Bachmat + one or more of D'Errico and Hoffecker
- Bachmat + one or more of Duggan, Windows 2000 Device Driver Book, Lorch, and Koizumi + one or more of D'Errico and Hoffecker
- Bachmat + one or more of Kamiyama and Woods + one or more of D'Errico and Hoffecker
- Bachmat + one or more of Duggan, Windows 2000 Device Driver Book, Lorch, and Koizumi + one or more of Kamiyama and Woods + one or more of D'Errico and Hoffecker
- Bachmat + one or more of Veritas NetBackup 3.4 for NDMP, Veritas NetBackup 3.4 for Lotus, Veritas NetBackup 3.4 for Oracle, Oracle8i Guide, Shangam, and Davy
- Bachmat + one or more of Duggan, Windows 2000 Device Driver Book, Lorch, and Koizumi + one or more of Veritas NetBackup 3.4 for NDMP, Veritas NetBackup 3.4 for Lotus, Veritas NetBackup 3.4 for Oracle, Oracle8i Guide, Shangam, and Davy
- Bachmat + one or more of Kamiyama and Woods + one or more of Veritas NetBackup 3.4 for NDMP, Veritas NetBackup 3.4 for Lotus, Veritas NetBackup 3.4 for Oracle, Oracle8i Guide, Shangam, and Davy
- Bachmat + one or more of Duggan, Windows 2000 Device Driver Book, Lorch, and Koizumi + one or more of Kamiyama and Woods + one or more of Veritas NetBackup 3.4 for NDMP, Veritas NetBackup 3.4 for Lotus, Veritas NetBackup 3.4 for Oracle, Oracle8i Guide, Shangam, and Davy
- D'Errico
- D'Errico + one or more of Duggan, Windows 2000 Device Driver Book, Lorch, and Koizumi
- D'Errico + one or more of Kamiyama and Woods
- D'Errico + one or more of Duggan, Windows 2000 Device Driver Book, Lorch, and Koizumi + one or more of Kamiyama and Woods
- D'Errico + one or more of Barracuda, Seagate Barracuda, and Schindler
- D'Errico + one or more of Duggan, Windows 2000 Device Driver Book, Lorch, and Koizumi + one or more of Barracuda, Seagate Barracuda, and Schindler
- D'Errico + one or more of Kamiyama and Woods + one or more of Barracuda, Seagate Barracuda, and Schindler
- D'Errico + one or more of Duggan, Windows 2000 Device Driver Book, Lorch, and Koizumi + one or more of Kamiyama and Woods + one or more of Barracuda, Seagate Barracuda, and Schindler
- D'Errico + one or more of Compaq Service Reference Guide, Compaq Integration Note, and Compag Management Agents Reference Guide

- D'Errico + one or more of Duggan, Windows 2000 Device Driver Book, Lorch, and Koizumi + one or more of Compaq Service Reference Guide, Compaq Integration Note, and Compag Management Agents Reference Guide
- D'Errico + one or more of Kamiyama and Woods + one or more of Compaq Service Reference Guide, Compaq Integration Note, and Compag Management Agents Reference Guide
- D'Errico + one or more of Duggan, Windows 2000 Device Driver Book, Lorch, and Koizumi + one or more of Kamiyama and Woods + one or more of Compaq Service Reference Guide, Compaq Integration Note, and Compag Management Agents Reference Guide
- D'Errico + Hoffecker
- D'Errico + one or more of Veritas NetBackup 3.4 for NDMP, Veritas NetBackup 3.4 for Lotus, Veritas NetBackup 3.4 for Oracle, Oracle8i Guide, Shangam, Davy, IBM DFSMSdss, and Veritas VxFS 3.4 Guide
- D'Errico + one or more of Duggan, Windows 2000 Device Driver Book, Lorch, and Koizumi + one or more of Veritas NetBackup 3.4 for NDMP, Veritas NetBackup 3.4 for Lotus, Veritas NetBackup 3.4 for Oracle, Oracle8i Guide, Shangam, Davy, IBM DFSMSdss, and Veritas VxFS 3.4 Guide
- D'Errico + one or more of Kamiyama and Woods + one or more of Veritas NetBackup 3.4 for NDMP, Veritas NetBackup 3.4 for Lotus, Veritas NetBackup 3.4 for Oracle, Oracle8i Guide, Shangam, Davy, IBM DFSMSdss, and Veritas VxFS 3.4 Guide
- D'Errico + one or more of Duggan, Windows 2000 Device Driver Book, Lorch, and Koizumi + one or more of Kamiyama and Woods + one or more of Veritas NetBackup 3.4 for NDMP, Veritas NetBackup 3.4 for Lotus, Veritas NetBackup 3.4 for Oracle, Oracle8i Guide, Shangam, Davy, IBM DFSMSdss, and Veritas VxFS 3.4 Guide
- EMC Symmetrix
- EMC Symmetrix + one or more of Duggan, Windows 2000 Device Driver Book, Lorch, and Koizumi
- EMC Symmetrix + one or more of Kamiyama, Woods, and Wolf
- EMC Symmetrix + one or more of Duggan, Windows 2000 Device Driver Book, Lorch, and Koizumi + one or more of Kamiyama, Woods, and Wolf
- EMC Symmetrix + one or more of Barracuda, Seagate Barracuda, and Schindler
- EMC Symmetrix + one or more of Duggan, Windows 2000 Device Driver Book, Lorch, and Koizumi + one or more of Barracuda, Seagate Barracuda, and Schindler
- EMC Symmetrix + one or more of Kamiyama, Woods, and Wolf + one or more of Barracuda, Seagate Barracuda, and Schindler
- EMC Symmetrix + one or more of Duggan, Windows 2000 Device Driver Book, Lorch, and Koizumi + one or more of Kamiyama, Woods, and Wolf + one or more of Barracuda, Seagate Barracuda, and Schindler
- EMC Symmetrix + one or more of Compaq Service Reference Guide, Compaq Integration Note, and Compag Management Agents Reference Guide
- EMC Symmetrix + one or more of Duggan, Windows 2000 Device Driver Book, Lorch, and Koizumi + one or more of Compaq Service Reference Guide, Compaq Integration Note, and Compag Management Agents Reference Guide

- EMC Symmetrix + one or more of Kamiyama, Woods, and Wolf + one or more of Compaq Service Reference Guide, Compaq Integration Note, and Compag Management Agents Reference Guide
- EMC Symmetrix + one or more of Duggan, Windows 2000 Device Driver Book, Lorch, and Koizumi + one or more of Kamiyama, Woods, and Wolf + one or more of Compaq Service Reference Guide, Compaq Integration Note, and Compag Management Agents Reference Guide
- EMC Symmetrix + one or more of D'Errico and Hoffecker
- EMC Symmetrix + one or more of Duggan, Windows 2000 Device Driver Book, Lorch, and Koizumi + one or more of D'Errico and Hoffecker
- EMC Symmetrix + one or more of Kamiyama, Woods, and Wolf + one or more of D'Errico and Hoffecker
- EMC Symmetrix + one or more of Duggan, Windows 2000 Device Driver Book, Lorch, and Koizumi + one or more of Kamiyama, Woods, and Wolf + one or more of D'Errico and Hoffecker
- EMC Symmetrix + one or more of Veritas NetBackup 3.4 for NDMP, Veritas NetBackup 3.4 for Lotus, Veritas NetBackup 3.4 for Oracle, Oracle8i Guide, Shangam, Davy, IBM DFSMSdss, and Veritas VxFS 3.4 Guide
- EMC Symmetrix + one or more of Duggan, Windows 2000 Device Driver Book, Lorch, and Koizumi + one or more of Veritas NetBackup 3.4 for NDMP, Veritas NetBackup 3.4 for Lotus, Veritas NetBackup 3.4 for Oracle, Oracle8i Guide, Shangam, Davy, IBM DFSMSdss, and Veritas VxFS 3.4 Guide
- EMC Symmetrix + one or more of Kamiyama, Woods, and Wolf + one or more of Veritas NetBackup 3.4 for NDMP, Veritas NetBackup 3.4 for Lotus, Veritas NetBackup 3.4 for Oracle, Oracle8i Guide, Shangam, Davy, IBM DFSMSdss, and Veritas VxFS 3.4 Guide
- EMC Symmetrix + one or more of Duggan, Windows 2000 Device Driver Book, Lorch, and Koizumi + one or more of Kamiyama, Woods, and Wolf + one or more of Veritas NetBackup 3.4 for NDMP, Veritas NetBackup 3.4 for Lotus, Veritas NetBackup 3.4 for Oracle, Oracle8i Guide, Shangam, Davy, IBM DFSMSdss, and Veritas VxFS 3.4 Guide
- Tivoli Storage Manager
- Tivoli Storage Manager + one or more of Duggan, Windows 2000 Device Driver Book, Lorch, and Koizumi
- Tivoli Storage Manager + one or more of Kamiyama, Woods, and Wolf
- Tivoli Storage Manager + one or more of Duggan, Windows 2000 Device Driver Book, Lorch, and Koizumi + one or more of Kamiyama, Woods, and Wolf
- Tivoli Storage Manager + one or more of Barracuda, Seagate Barracuda, and Schindler
- Tivoli Storage Manager + one or more of Duggan, Windows 2000 Device Driver Book, Lorch, and Koizumi + one or more of Barracuda, Seagate Barracuda, and Schindler
- Tivoli Storage Manager + one or more of Kamiyama, Woods, and Wolf + one or more of Barracuda, Seagate Barracuda, and Schindler
- Tivoli Storage Manager + one or more of Duggan, Windows 2000 Device Driver Book, Lorch, and Koizumi + one or more of Kamiyama, Woods, and Wolf + one or more of Barracuda, Seagate Barracuda, and Schindler
- Tivoli Storage Manager + one or more of Compaq Service Reference Guide, Compaq Integration Note, and Compag Management Agents Reference Guide

- Tivoli Storage Manager + one or more of Duggan, Windows 2000 Device Driver Book, Lorch, and Koizumi + one or more of Compaq Service Reference Guide, Compaq Integration Note, and Compag Management Agents Reference Guide
- Tivoli Storage Manager + one or more of Kamiyama, Woods, and Wolf + one or more of Compaq Service Reference Guide, Compaq Integration Note, and Compag Management Agents Reference Guide
- Tivoli Storage Manager + one or more of Duggan, Windows 2000 Device Driver Book, Lorch, and Koizumi + one or more of Kamiyama, Woods, and Wolf + one or more of Compaq Service Reference Guide, Compaq Integration Note, and Compag Management Agents Reference Guide
- Tivoli Storage Manager + one or more of D'Errico and Hoffecker
- Tivoli Storage Manager + one or more of Duggan, Windows 2000 Device Driver Book, Lorch, and Koizumi + one or more of D'Errico and Hoffecker
- Tivoli Storage Manager + one or more of Kamiyama, Woods, and Wolf + one or more of D'Errico and Hoffecker
- Tivoli Storage Manager + one or more of Duggan, Windows 2000 Device Driver Book, Lorch, and Koizumi + one or more of Kamiyama, Woods, and Wolf + one or more of D'Errico and Hoffecker
- Tivoli Storage Manager + one or more of Veritas NetBackup 3.4 for NDMP, Veritas NetBackup 3.4 for Lotus, Veritas NetBackup 3.4 for Oracle, Oracle8i Guide, Shangam, Davy, IBM DFSMSdss, and Veritas VxFS 3.4 Guide
- Tivoli Storage Manager + one or more of Duggan, Windows 2000 Device Driver Book, Lorch, and Koizumi + one or more of Veritas NetBackup 3.4 for NDMP, Veritas NetBackup 3.4 for Lotus, Veritas NetBackup 3.4 for Oracle, Oracle8i Guide, Shangam, Davy, IBM DFSMSdss, and Veritas VxFS 3.4 Guide
- Tivoli Storage Manager + one or more of Kamiyama, Woods, and Wolf + one or more of Veritas NetBackup 3.4 for NDMP, Veritas NetBackup 3.4 for Lotus, Veritas NetBackup 3.4 for Oracle, Oracle8i Guide, Shangam, Davy, IBM DFSMSdss, and Veritas VxFS 3.4 Guide
- Tivoli Storage Manager + one or more of Duggan, Windows 2000 Device Driver Book, Lorch, and Koizumi + one or more of Kamiyama, Woods, and Wolf + one or more of Veritas NetBackup 3.4 for NDMP, Veritas NetBackup 3.4 for Lotus, Veritas NetBackup 3.4 for Oracle, Oracle8i Guide, Shangam, Davy, IBM DFSMSdss, and Veritas VxFS 3.4 Guide

As mentioned above, Defendant has not yet completed its search or discovery concerning additional prior art. Moreover, the exemplary combinations are provided based on Defendant's current understanding of the Asserted Claims and Plaintiffs' apparent view of the scope of those claims as shown, for example, in Plaintiffs' Infringement Contentions. Further, a *Markman* Order has not yet been issued in this case. As such, Defendant's inclusion of exemplary combinations does not preclude them from identifying other invalidating combinations as appropriate, and

Defendant reserves the right to identify additional specific combinations as well as to detail and explain such combinations.

2. The ’332 Patent

Pursuant to P.R. 3-3(a) and (b), Defendant identifies in Exhibits B1-B7 the prior art references that render obvious the Asserted Claims of the ’332 Patent and include below exemplary combinations showing the obviousness of the ’332 Patent Asserted Claims in view of the prior art. To the extent Plaintiffs contends that an element is not disclosed in any one of the anticipatory references described in Exhibits B1-B7, the limitation would have been obvious in light of the disclosures within the reference and the knowledge of one of skill in the art at the time of the ’332 Patent. Moreover, to the extent Plaintiffs contends that an element is not disclosed in any one of the anticipatory references described in Exhibits B1-B7, such reference may be combined with any other references listed in Exhibits B1-B7 for such element, thereby rendering the claims invalid for obviousness.

To the extent a finder of fact determines that a limitation of any of the ’332 Patent Asserted Claims is not disclosed by one of the references identified above pursuant to P.R. 3-3(a), the claim is nevertheless unpatentable as obvious because they contain nothing that constitutes a patentable innovation. To the extent a finder of fact determines that a limitation of the ’332 Patent Asserted Claims is not anticipated, it does not go beyond combining familiar elements according to known methods to achieve predictable results or does more than choose between clear alternatives known to those of ordinary skill in the art.

(a) Obviousness Rationale

For at least the reasons described in these contentions, it would have been obvious to one of ordinary skill in the art to combine any of a number of prior art references, including any combination of those prior art references identified in Exhibits B1-B7 along with the knowledge

of one of ordinary skill in the art to meet the limitations of the ’332 Patent Asserted Claims. Moreover, as mentioned above, Defendant has not yet completed its search or discovery concerning additional prior art. As such, Defendant’s inclusion of exemplary combinations does not preclude them from identifying other invalidating combinations as appropriate, and Defendant reserves the right to identify additional specific combinations as well as to detail and explain such combinations.

To the extent not anticipated, the ’332 Patent Asserted Claims represent no more than the result of ordinary variations of the prior art. Defendant further believes that no showing of a specific motivation to combine prior art is required to combine the references disclosed above and in the attached charts, as each combination of art would have no unexpected results, and at most would simply represent a known alternative to one of skill in the art. *See KSR Int’l Co. v. Teleflex, Inc.*, 550 U.S. 398, 415-16 (2007) (rejecting the Federal Circuit’s “rigid” application of the teaching, suggestion, or motivation to combine test, instead espousing an “expansive and flexible” approach). Indeed, the Supreme Court held that a person of ordinary skill in the art is “a person of ordinary creativity, not an automaton” and “in many cases a person of ordinary skill in the art will be able to fit the teachings of multiple patents together like pieces of a puzzle.” *Id.* at 420-21. Nevertheless, in addition to the information contained elsewhere in these contentions, Defendant identifies motivation and reason to combine the cited art.

One or more combinations of the prior art references identified in Exhibits B1-B7 would have been obvious because these references would have been combined using: known methods to yield predictable results; known techniques in the same way; a simple substitution of one known, equivalent element for another to obtain predictable results; and/or a teaching, suggestion, or motivation in the prior art generally. In addition, it would have been obvious to try combining the

prior art references identified above because there were only a finite number of predictable solutions and/or because known work in one field of endeavor prompted variations based on predictable design incentives and/or market forces either in the same field or a different one. Further, the combinations of the prior art references identified in Exhibits B1-B7 would have been obvious because the combinations represent known potential options with a reasonable expectation of success.

Additional evidence that there would have been a motivation to combine the prior art references identified above includes the interrelated teachings of multiple prior art references; common authorship; the effects of demands known to the design community or present in the marketplace; the existence of a known problem for which there was an obvious solution encompassed by the ’332 Patent Asserted Claims; the existence of a known need or problem in the field of the endeavor at the time of the alleged invention(s); and the background knowledge that would have been possessed by a person having ordinary skill in the art.

Thus, the motivation to combine the teachings of the prior art references disclosed in Exhibits B1-B7 is found in the references themselves and also in: (1) the nature of the problem being solved; (2) the express, implied and inherent teachings of the prior art; (3) the knowledge of persons of ordinary skill in the art; (4) the predictable results obtained in combining the different elements of the prior art; (5) the predictable results obtained in simple substitution of one known element for another; (6) the use of a known technique to improve similar devices, methods, or products in the same way; (7) the predictable results obtained in applying a known technique to a known device, method, or product ready for improvement; (8) the finite number of identified predictable solutions that had a reasonable expectation of success; and (9) known work in various

technological fields that could be applied to the same or different technological fields based on design incentives or other market forces.

Additionally, it would be obvious to one of skill in the art to consult and/or combine any of the prior art listed in Exhibits B1-B7 because all of these references relate to the same area of technology and/or are from analogous art. The ’332 Patent Asserted Claims are directed to “a technique for hot deploying/redeploying applications in a grid computing environment . . . .” ’332 Patent at Abstract. The ’332 Patent Asserted Claims merely unite old elements, well known in the field, with no change in their respective function or result. Given the interrelated teachings of the prior art, the effects of demands known to the design community or present in the marketplace, and the background knowledge possessed by a person having ordinary skill in the art, it would have been obvious for one of ordinary skill in the art to combine these familiar elements, disclosed and/or embodied in the prior art listed above to practice the ’322 Patent Asserted Claims.

All of the ’332 Patent Asserted Claims are directed to a method for hot deploying or redeploying applications in a grid computing environment. Such technology, at least partially based on, but not limited by, the claim constructions implicit in Plaintiffs’ Infringement Contentions, was widely known before the alleged priority date of the ’322 Patent, as evidenced by the references in Exhibits B1-B7. *See, e.g.*, Sadtler at 944–45; Thyagarajan at 3:13-4:22; ’002 Chevrette at 14:15–25; Friese at 44–45; “The JBoss JMX Microkernal” at 32; Vincent at [0036]–[0043]; Charisius at [0188]–[0195]; Robertson at [0022], [0040].

One of ordinary skill in the art would have been motivated to combine any of the references in Exhibits B1-B7 because at the time of the alleged invention deploying applications in a heterogeneous grid environment while maintaining container uptime was a common problem with a well-known solution. In particular, common problems with conventional techniques for

deploying applications in a grid environment while maintaining uptime of other applications were known to persons of ordinary skill in the art, and discovery services, protocol-specific plug-ins and hot deployment were well-known solutions. *See, e.g.*, Sadtler at 21–22, 33–34, 70, 95, 342, 364, 944–45, 954–55; Henseler at 2:14–59, 20:1–34, 26:7–51, 27:36–44; Thyagarajan at 3:13-4:22; Chevrette at 14:15–25, 17:1-12, 19:28–20:04; Friese at 40–45; "The JBoss JMX Microkernal" at 32; "Clustering" at 7–10; "JBoss Cache and JGroups Services" at 1; Vincent at [0036]–[0043]; Charisius at [0188]–[0195]; Robertson at [0022], [0040].

Further, the prior art references provide motivations to combine because they explicitly suggest utilizing the teachings and disclosures of other references.

In accordance with these advances, the prior art could have been combined according to methods known to those of ordinary skill within the field of the Asserted Patent to yield predictable results. The substitution of one element in an application server or grid computing environment could have been predictably achieved by one of ordinary skill at the time of the alleged invention. One of ordinary skill in the art would have been aware of these various applications, including systems and methods for deploying applications within an application container without the need to terminate other applications running in the same container, and would have been able to select appropriate attributes of one for inclusion in another. Those of ordinary skill in the art could have employed known techniques to improve similar prior art devices in the same way as claimed in the '332 Patent.

In addition, one of ordinary skill in the art would be motivated to combine the prior art references because the elements found in the Asserted Claims are well known in the art. Indeed, the listed inventors of the Asserted Patents admitted as much in the specification of the '332 Patent.

See ’332 Patent at 1:12-45 (discussing prior art grid computing systems, application containers, and hot deployment methods).

Any reference or combination of references that anticipates or makes obvious an asserted independent claim also makes obvious any asserted claim dependent on that independent claim, as the element of each dependent ’332 Patent Asserted Claim was known by a person of ordinary skill at the time of the alleged invention, at least partially based on, but not limited by, the claim constructions implicit in Plaintiffs’ Infringement Contentions, and it would have been obvious to combine those known elements with the independent claims at least as a matter of common sense and routine innovation. Accordingly, Defendant contends that each Asserted Claim would have been obvious not only by the combinations described in these contentions, but also by any combination of references that renders obvious an Asserted Claim.

In addition to the specific examples of motivation provided above, Defendant reserves the right to rely on the disclosures of the references listed in Exhibits B1-B7 for additional motivation to combine. The above-identified examples of combinations are given merely to illustrate various motivations to combine and are not intended to provide an exhaustive list of every possible combination to which the motivation may apply. Defendant reserves the right to contend that the above-described motivations to combine apply to other combinations at the appropriate time, i.e., in expert reports regarding invalidity.

For at least the reasons described above, it would have been obvious to one of ordinary skill in the art to combine each prior art reference listed in Exhibits B1-B7 with any other reference or references listed in Exhibits B1-B7 along with the knowledge of one of ordinary skill in the art to arrive at the inventions claims in the ’332 Patent. For example, and without limitation, the

Asserted Claims of the ’332 Patent would have been obvious to one of ordinary skill in the art in view of the following combinations:

- Henseler
- Henseler + Thyagarajan
- Henseler + Thyagarajan + one or more of Chevrette, Friese, Sadtler, JBoss, Globus Toolkit, Kautzleben, and Vincent
- Henseler + Chevrette
- Henseler + Chevrette + one or more of Friese, Sadtler, JBoss, Globus Toolkit, Kautzleben, and Vincent
- Henseler + Friese
- Henseler + Friese + one or more of Sadtler, JBoss, Globus Toolkit, Kautzleben, and Vincent
- Henseler + Sadtler
- Henseler + Sadtler + one or more of JBoss, Globus Toolkit, Kautzleben, and Vincent
- Henseler + JBoss
- Henseler + JBoss + one or more of Globus Toolkit, Kautzleben, and Vincent
- Henseler + Globus Toolkit
- Henseler + Globus Toolkit + one or more of Kautzleben and Vincent
- Henseler + Kautzleben
- Henseler + Kautzleben + Vincent
- Henseler + Vincent
- Chevrette
- Chevrette + Thyagarajan
- Chevrette + Thyagarajan + one or more of Sadtler, JBoss, Globus Toolkit, Kautzleben, Vincent, and Henseler
- Chevrette + Sadtler
- Chevrette + Sadtler + one or more of JBoss, Globus Toolkit, Kautzleben, Vincent, and Henseler
- Chevrette + JBoss
- Chevrette + JBoss + one or more of Globus Toolkit, Kautzleben, Vincent, and Henseler
- Chevrette + Globus Toolkit
- Chevrette + Globus Toolkit + one or more of Kautzleben, Vincent, and Henseler
- Chevrette + Kautzleben
- Chevrette + Kautzleben + one or more of Vincent and Henseler
- Chevrette + Vincent
- Chevrette + Vincent + Henseler
- Chevrette + Henseler
- Friese
- Friese + Thyagarajan
- Friese + Thyagarajan + one or more of Chevrette, Sadtler, JBoss, Globus Toolkit, Kautzleben, Vincent, and Henseler
- Friese + Chevrette

- Friese + Chevrette + one or more of Sadtler, JBoss, Globus Toolkit, Kautzleben, Vincent, and Henseler
- Friese + Sadtler
- Friese + Sadtler + one or more of JBoss, Globus Toolkit, Kautzleben, Vincent, and Henseler
- Friese + JBoss
- Friese + JBoss + one or more of Globus Toolkit, Kautzleben, Vincent, and Henseler
- Friese + Globus Toolkit
- Friese + Globus Toolkit + one or more of Kautzleben, Vincent, and Henseler
- Friese + Kautzleben
- Friese + Kautzleben + one or more of Vincent and Henseler
- Friese + Vincent
- Friese + Vincent + Henseler
- Friese + Henseler
- IBM Websphere
- IBM Websphere + Thyagarajan
- IBM Websphere + Thyagarajan + one or more of Chevrette, Friese, JBoss, Globus Toolkit, Kautzleben, Vincent, and Henseler
- IBM Websphere + Chevrette
- IBM Websphere + Chevrette + one or more of Friese, JBoss, Globus Toolkit, Kautzleben, Vincent, and Henseler
- IBM Websphere + Friese
- IBM Websphere + Friese + one or more of JBoss, Globus Toolkit, Kautzleben, Vincent, and Henseler
- IBM Websphere + JBoss
- IBM Websphere + JBoss + one or more of Globus Toolkit, Kautzleben, Vincent, and Henseler
- IBM Websphere + Globus Toolkit
- IBM Websphere + Globus Toolkit + one or more of Kautzleben, Vincent, and Henseler
- IBM Websphere + Kautzleben
- IBM Websphere + Kautzleben + one or more of Vincent and Henseler
- IBM Websphere + Vincent
- IBM Websphere + Vincent + Henseler
- IBM Websphere + Henseler
- JBoss
- JBoss + Thyagarajan
- JBoss + Thyagarajan + one or more of Chevrette, Friese, Sadtler, Globus Toolkit, Kautzleben, Vincent, and Henseler
- JBoss + Chevrette
- JBoss + Chevrette + one or more of Friese, Sadtler, Globus Toolkit, Kautzleben, Vincent, and Henseler
- JBoss + Friese
- JBoss + Friese + one or more of Sadtler, Globus Toolkit, Kautzleben, Vincent, and Henseler

- JBoss + Sadtler
- JBoss + Sadtler + one or more of Globus Toolkit, Kautzleben, Vincent, and Henseler
- JBoss + Globus Toolkit
- JBoss + Globus Toolkit + one or more of Kautzleben, Vincent, and Henseler
- JBoss + Kautzleben
- JBoss + Kautzleben + one or more of Vincent and Henseler
- JBoss + Vincent
- JBoss + Vincent + Henseler
- JBoss + Henseler
- Borg
- Borg + Thyagarajan
- Borg + Thyagarajan + one or more of Chevrette, Friese, Sadtler, JBoss, Globus Toolkit, Kautzleben, Vincent, and Henseler
- Borg + Chevrette
- Borg + Chevrette + one or more of Friese, Sadtler, JBoss, Globus Toolkit, Kautzleben, Vincent, and Henseler
- Borg + Friese
- Borg + Friese + one or more of Sadtler, JBoss, Globus Toolkit, Kautzleben, Vincent, and Henseler
- Borg + Sadtler
- Borg + Sadtler + one or more of JBoss, Globus Toolkit, Kautzleben, Vincent, and Henseler
- Borg + JBoss
- Borg + JBoss + one or more of Globus Toolkit, Kautzleben, Vincent, and Henseler
- Borg + Globus Toolkit
- Borg + Globus Toolkit + one or more of Kautzleben, Vincent, and Henseler
- Borg + Kautzleben
- Borg + Kautzleben + one or more of Vincent and Henseler
- Borg + Vincent
- Borg + Vincent + Henseler
- Borg + Henseler
- Oracle 10g
- Oracle 10g + Thyagarajan
- Oracle 10g + Thyagarajan + one or more of Chevrette, Friese, Sadtler, JBoss, Globus Toolkit, Kautzleben, Vincent, and Henseler
- Oracle 10g + Chevrette
- Oracle 10g + Chevrette + one or more of Friese, Sadtler, JBoss, Globus Toolkit, Kautzleben, Vincent, and Henseler
- Oracle 10g + Friese
- Oracle 10g + Friese + one or more of Sadtler, JBoss, Globus Toolkit, Kautzleben, Vincent, and Henseler
- Oracle 10g + Sadtler
- Oracle 10g + Sadtler + one or more of JBoss, Globus Toolkit, Kautzleben, Vincent, and Henseler
- Oracle 10g + JBoss

- Oracle 10g + JBoss + one or more of Globus Toolkit, Kautzleben, Vincent, and Henseler
- Oracle 10g + Globus Toolkit
- Oracle 10g + Globus Toolkit + one or more of Kautzleben, Vincent, and Henseler
- Oracle 10g + Kautzleben
- Oracle 10g + Kautzleben + one or more of Vincent and Henseler
- Oracle 10g + Vincent
- Oracle 10g + Vincent + Henseler
- Oracle 10g + Henseler

As mentioned above, Defendant has not yet completed its search or discovery concerning additional prior art. Moreover, the exemplary combinations are provided based on Defendant's current understanding of the Asserted Claims and Plaintiffs' apparent view of the scope of those claims as shown, for example, in Plaintiffs' Infringement Contentions. Further, a *Markman* Order has not yet been issued in this case. As such, Defendant's inclusion of exemplary combinations does not preclude them from identifying other invalidating combinations as appropriate, and Defendant reserves the right to identify additional specific combinations as well as to detail and explain such combinations.

3. The '686 Patent

Pursuant to P.R. 3-3(a) and (b), Defendant identifies in Exhibits C1-C6 the prior art references that render obvious the Asserted Claims of the '686 Patent and include below exemplary combinations showing the obviousness of the '686 Patent Asserted Claims in view of the prior art. To the extent Plaintiffs contends that an element is not disclosed in any one of the anticipatory references described in Exhibits C1-C6, the limitation would have been obvious in light of the disclosures within the reference and the knowledge of one of skill in the art at the time of the '686 Patent. Moreover, to the extent Plaintiffs contends that an element is not disclosed in any one of the anticipatory references described in Exhibits C1-C6, such reference may be combined with any other references listed in Exhibits C1-C6 for such element, thereby rendering the claims invalid for obviousness.

To the extent a finder of fact determines that a limitation of any of the ’686 Patent Asserted Claims is not disclosed by one of the references identified above pursuant to P.R. 3-3(a), the claim is nevertheless unpatentable as obvious because they contain nothing that constitutes a patentable innovation. To the extent a finder of fact determines that a limitation of the ’686 Patent Asserted Claims is not anticipated, it does not go beyond combining familiar elements according to known methods to achieve predictable results or does more than choose between clear alternatives known to those of ordinary skill in the art.

(a) Obviousness Rationale

For at least the reasons described in these contentions, it would have been obvious to one of ordinary skill in the art to combine any of a number of prior art references, including any combination of those prior art references identified in Exhibits C1-C6 along with the knowledge of one of ordinary skill in the art to meet the limitations of the ’686 Patent Asserted Claims. Moreover, as mentioned above, Defendant has not yet completed its search or discovery concerning additional prior art. Defendant’s inclusion of exemplary combinations does not preclude them from identifying other invalidating combinations as appropriate, and Defendant reserves the right to identify additional specific combinations as well as to detail and explain such combinations.

To the extent not anticipated, the ’686 Patent Asserted Claims represent no more than the result of ordinary variations of the prior art. Defendant further believes that no showing of a specific motivation to combine prior art is required to combine the references disclosed above and in the attached charts, as each combination of art would have no unexpected results, and at most would simply represent a known alternative to one of skill in the art. *See KSR Int’l Co. v. Teleflex, Inc.*, 550 U.S. 398, 415-16 (2007) (rejecting the Federal Circuit’s “rigid” application of the teaching, suggestion, or motivation to combine test, instead espousing an “expansive and flexible”

approach). Indeed, the Supreme Court held that a person of ordinary skill in the art is "a person of ordinary creativity, not an automaton" and "in many cases a person of ordinary skill in the art will be able to fit the teachings of multiple patents together like pieces of a puzzle." *Id.* at 420-21. Nevertheless, in addition to the information contained elsewhere in these contentions, Defendant identifies motivation and reason to combine the cited art.

One or more combinations of the prior art references identified in Exhibits C1-C6 would have been obvious because these references would have been combined using: known methods to yield predictable results; known techniques in the same way; a simple substitution of one known, equivalent element for another to obtain predictable results; and/or a teaching, suggestion, or motivation in the prior art generally. In addition, it would have been obvious to try combining the prior art references identified above because there were only a finite number of predictable solutions and/or because known work in one field of endeavor prompted variations based on predictable design incentives and/or market forces either in the same field or a different one. Further, the combinations of the prior art references identified in Exhibits C1-C6 would have been obvious because the combinations represent known potential options with a reasonable expectation of success.

Additional evidence that there would have been a motivation to combine the prior art references identified above includes the interrelated teachings of multiple prior art references; common authorship; the effects of demands known to the design community or present in the marketplace; the existence of a known problem for which there was an obvious solution encompassed by the '686 Patent Asserted Claims; the existence of a known need or problem in the field of the endeavor at the time of the alleged invention(s); and the background knowledge that would have been possessed by a person having ordinary skill in the art.

Thus, the motivation to combine the teachings of the prior art references disclosed in Exhibits C1-C6 is found in the references themselves and also in: (1) the nature of the problem being solved; (2) the express, implied and inherent teachings of the prior art; (3) the knowledge of persons of ordinary skill in the art; (4) the predictable results obtained in combining the different elements of the prior art; (5) the predictable results obtained in simple substitution of one known element for another; (6) the use of a known technique to improve similar devices, methods, or products in the same way; (7) the predictable results obtained in applying a known technique to a known device, method, or product ready for improvement; (8) the finite number of identified predictable solutions that had a reasonable expectation of success; and (9) known work in various technological fields that could be applied to the same or different technological fields based on design incentives or other market forces.

Additionally, it would be obvious to one of skill in the art to consult and/or combine any of the prior art listed in Exhibits C1-C6 because all of these references relate to the same area of technology and/or are from analogous art.

The ’686 Patent relates to “an apparatus and method for providing data security for use with a file system.” ’686 Patent at Abstract. The ’686 Patent Asserted Claims merely unite old elements, well known in the field, with no change in their respective function or result. The patent explains users previously relied on encryption but that “encryption-decryption software applications are typically time consuming to use and have often caused confusion for the users.” Id. at 1:10–18. It further states that “on common file systems, an individual can still reconstruct a file (e.g. software) on a different disk, without the need for proper authorization, by retrieving the data blocks that make up the file (or set of files). For Example, on a UNIX file system, an individual can retrieve the data blocks of a file by accessing the index node (inode) of the file and completely

bypass the application that is used for accessing the file." *Id.* at 1:25–32. It then contrasts "previous systems" where "the data blocks of a file are linearly placed on a storage device and can be obtained by accessing the inode of the file," with its proposal to "vary the distribution of the data blocks on the storage device … in order to provide security." *Id.* at 2:62–3:8. Figure 1 depicts a conventional OS stack (VFS 105 → file system 110 → memory cache 120 → disk I/O 135 → block device driver 160) and introduces a "block distribution engine 140," which "can be programmed by use of standard programming languages (e.g., C, C++, Pascal)." *Id.* at 2:1–28, 2:62–3:8, 2:48–3:1.

All of the '686 Patent Asserted Claims are directed to applying a mapping function to data to maintain data security in a generic operating system. But the '686 Patent Asserted Claims all merely unite old elements, well known in the field, with no change in their respective function or result. Indeed, the listed inventors of the Asserted Patents admitted as much in the specification of the '686 Patent, characterizing the "engine 140" which carries out the mapping as ordinary software in standard languages integrated into a conventional VFS/file-system/I-O stack, and it uses the mathematical mapping outputs as disk addresses—i.e., a substitution cipher over indices—without any new file system structure. '686 patent at 2:48–3:1; 3:34–4:4; 5:34–6:11.

Given the interrelated teachings of the prior art, the effects of demands known to the design community or present in the marketplace, and the background knowledge possessed by a person having ordinary skill in the art, it would have been obvious for one of ordinary skill in the art to combine these familiar elements, disclosed and/or embodied in the prior art listed above to practice the '686 Patent Asserted Claims. The identified references are in the same or similar technical fields, address the same technical issues, and suggest similar solutions to providing data security in a generic file system. A "key concept supported by virtually all operating systems is the file system" that "hide[s] the peculiarities of the disks and other I/O devices and present[s] the programmer with a nice, clean abstract model of device-independent files." Modern Operating

Systems, 2001 (Tanenbaum) at 70. Files are necessary since "many applications" must retain information for "weeks, months, or even forever," and such information "must not go away when a computer crash" occurs. *Id.* at 467.

The basic operating system, including the constituent aspects discussed in the patent, including system calls, the use and manipulation of data block numbers and index nodes associated with files in a storage system was widely known before the alleged priority date of the '686 Patent. "System calls are obviously needed to create files, remove files, read files, and write files." *Id.* 70. Some of the more common file operations are create, delete, open, close, read, write, append, seek (specify from where to access a file's data), rename, etc. *Id.* at 477-478. For example, "[b]efore a file can be read, it must be located on the disk and opened, and after it has been read it should be closed, so calls are provided to do these things." *Id.* at 70. To allow a file to be accessed non-sequentially (i.e., at any position in the file) and efficiently, and to avoid a disk becoming fragmented (where some segments on the disk cannot be used), many file systems (e.g., "Unix V7 File System) use a data structure called an "i-node (index node)" which includes "disk addresses of the files blocks." *Id.* at 491-494, 496 (emphasis in the original), 545.

The need for data security was also well-known as of the Critical Date in 2007. "Practical Unix Security," O'Reilly & Associates, 1992 (Garfinkel), states that "you should consider using encryption for every piece of sensitive information on your computer system" and "[y]ou simply can't assure that the data on your computer will never fall into the wrong hands." Garfinkel at 5. "Inside the Windows NT File System," Microsoft Press, 1994 (Custer), similarly explains that "[d]ata security is of primary importance to businesses and government agencies that process private or sensitive information…Such customers need guarantees that their data will be secure from unauthorized access." Custer at 5. "Unix Security: a practical tutorial" McGraw-Hill, 1992 (Arnold), echoes Custer's statements, explaining that that "Government purchases are the largest market for computers. The government requires highly trusted systems." Arnold at 6. To provide data security, encryption techniques were introduced into existing file systems, often called an "encrypted file system." For example, U.S. Pat. App. Pub. No. 2005/0091487 (Cross) discloses an

encrypted file system. Cross at Abstract. Additionally, U.S. Pat. App. Pub. No. 2007/0168678 (Meenakshisundaram)'s "database system provides an encrypted file system that is optimized for database storage security." Meenakshisundaram at [0088]. Modern Operating Systems, 2001 (Tanenbaum) devotes a chapter to security since "[m]any companies possess valuable information that they guard closely." Tanenbaum at 706. Tanenbaum's chapter discusses cryptography, user authentication, potential attacks, etc. *Id.* at 707-807. Countless prior art references describe a method of providing data security for use with a file system. *See, e.g.*, Colgrove '008 at Abstract, 1:6–23, 2:17–22, 2:41–56, 3:56–60, 5:7–12, 5:34–59, 14:42–57.

One of ordinary skill in the art would have been motivated to combine any of the references in Exhibits C1-C6 because at the time of the alleged invention, maintaining confidentiality of file system data was a common problem with well-known solutions. As Locasto explained, for example"[c]ryptographic file systems provide data confidentiality by employing encryption to protect files against unauthorized access." Locasta at 1. A person of skill in the art would have appreciated the importance of protecting sensitive data against unauthorized access and, thus, would have been prompted to bolster a file system, for example, as described in Madany, with data encryption teachings such as those taught by Locasto. As explained above, many contemporaneous sources explicitly acknowledged the need for enhanced data protection. This became especially important as computer systems became increasingly accessible remotely over public networks, creating additional opportunities for bad actors to gain access to a computer. For example, Garfinkel states that "you should consider using encryption for every piece of sensitive information on your computer system" and "[y]ou simply can't assure that the data on your computer will never fall into the wrong hands." Garfinkel at 5.

For example, a person of skill in the art would have been motivated to combine a reference like Madany disclosing the standard file system operation with the specific security benefits espoused in Locasto. Locasto's approach to encryption "reduc[es] the performance penalty associated with using larger key sizes without decreasing the level of security." Locasta at 2. As Locasto explains, by "using only part of the key for cryptographic operations" and "[t]he rest of

the key…to unpredictably spread the data into the file's address space," "a user may decrease the performance penalty they pay for employing a cryptographic file system." *Id.*; *see also* 1 ("improved performance relative to a cipher with a larger key-schedule"), 12 ("calculation of a new index has a negligible impact on performance") ("we have increased the effective cryptographic key length by 28 bits, correspondingly increasing an attacker's work factor by 228"").

From the person of skill in the art's perspective, the balance of security and performance offered by references like Locasta would have been an advantageous addition to the file systems disclosed, for example in Madany, which pursues efficiency along an orthogonal dimension—storage size—that is compatible with that pursued by Locasto. For example, Locasto explains that "[s]ince encryption is an expensive operation, there is a trade-off between performance and security that a system designer must take into consideration." Locasto 1. In response, Locasto, "reduc[es] the performance penalty associated with using larger key sizes without decreasing the level of security." *Id.* at 2. Locasto's solution "can increase an attacker's work factor by 228 without noticeable performance loss for legitimate users." *Id.* Achieving enhanced security comparable to robust encryption algorithms without sacrificing performance would have been a predictable and highly desirable outcome of the combination of references disclosed in Exhibits C1-C6.

Contemporaneous trends in file system design and marketing would have also prompted the person of skill in the art to pursue the combinations of references disclosed in Exhibits C1-C6. For example, a person of skill in the art would have known that data security solutions were incorporated into "popular file systems," such as the "WINDOWS NT file system" disclosed, for example, in Madany at 1:44-52. As explained in Custer, the WINDOWS NT reference book also cited by Madany, "Data security is of primary importance to businesses and government agencies that process private or sensitive information…Such customers need guarantees that their data will be secure from unauthorized access." Custer at 5. Madany also references and applies aspects of the UNIX operation system. Madany at 1:44-52, 5:29-51. And it was well known that skilled

artisans and market participants were actively pursuing secure variations of the UNIX operating system, some of which included built-in encryption programs. For example, Arnold explains that "Government purchases are the largest market for computers. The government requires highly trusted systems. The UNIX operating system has been augmented by many firms in order to gain better ratings." Arnold at 6. Additionally, Garfinkel writes that "[a]lthough there is no standard UNIX program that performs encryption using the DES [encryption algorithm], Sun Microsystems' operating system does include such a program[.]" Garfinkel at 14. Accordingly, a person of skill in the art would have sought data security improvements to the file system, like Madany's file system, in an effort to compete and distinguish over competitor products in the marketplace.

By the time of the '686 Patent in 2007, the scientific and patent literature was replete with proposals to incorporate data encryption techniques into existing file systems, often called an "encrypted file system." For example, Cross discloses an encrypted file system. Cross at Abstract, generally. And Meenakshisundaram's "database system provides an encrypted file system that is optimized for database storage security." Meenakshisundaram at [0088]. Moreover, Locasto provides a "Related Work" section that details numerous different types of secure file systems and related technologies for encrypting, hiding, and otherwise protecting confidential data. Locasto at 13. A POSITA would have been motivated by this widely and growing recognized need, contemporaneous design, and research trends to incorporate encryption-focused teachings into a file system.

In addition, one of ordinary skill in the art would be motivated to combine the prior art references because the elements found in the Asserted Claims are well known in the art. Indeed, the listed inventors of the Asserted Patents admitted as much in the specification of the '686 Patent, characterizing the "engine 140" which carries out the mapping as ordinary software in standard languages integrated into a conventional VFS/file-system/I-O stack, and it uses the mathematical mapping outputs as disk addresses—i.e., a substitution cipher over indices—without any new file system structure. '686 patent at 2:48–3:1; 3:34–4:4; 5:34–6:11. A POSITA would have been led

to apply a known technique of data encryption to a known file system to achieve predictable results (a file system with improved data security). Each element in the combinations of references in Exhibits C1-C6 merely performs the same function as it does separately. For example, Locasto uses the known "Blowfish encryption algorithm [15] to encrypt each block of data." Locasto at 9 (citing Schneier, "Description of a New Variable-Length Key, 64-Bit Block Cipher (Blowfish)," in Fast Software Encryption, Cambridge Security Workshop Proceedings, pages 191–204. Springer-Verlag, December 1993). Similarly, Madany's provides an overview of known file systems technology (e.g., Madany at 5:29-6:37, FIGS. 1, 2), including "Inodes [which] are described in 'The Design and Implementation of the 4.3BSD UNIX Operating System', Chapter 7." Additionally, the references in Exhibits C1-C6 discuss similar file systems running in Unix and Unix-like operating systems, and thus could be predictably combined. *E.g.*, Madany at 1:47-50, 5:41-44; Locasto at 1.

A person of skill in the art would have had a reasonable expectation of success in creating the combinations in Exhibits C1-C6, which would have required only routine programming knowledge well within the skill of a person of skill in the art. The disclosed combinations include components of a file system and known encryption techniques to enhance the security of such file systems. Integrating these aspects of the prior art references would have been a routine programming task for a person of routine skill in the art. For example, both Unix and the Linux kernel were largely implemented in C, a programming language a person of skilled art would have known well. Locasto, for example, states that "CamouflageFS is a rather straightforward extension to the standard Ext2 file system for the Linux 2.4.19 kernel," and "[t]he current implementation can coexist with normal file operations and does not require any extra work to use regular Ext2 files." Locasto at 8. Since the extension is straightforward, applying its techniques would have been well within the ability of a POSITA.

In accordance with these advances, the prior art could have been combined according to methods known to those of ordinary skill within the field of the '686 Patent to yield predictable results. The substitution of one security element in a file system architecture could have been

predictably achieved by one of ordinary skill at the time of the alleged invention. One of ordinary skill in the art would have been aware of the desirability and benefit of employing basic mapping functions and would have understood how to easily deploy such a mapping function effectively as a mechanism to map physical block numbers in a storage device. Those of ordinary skill in the art could have employed known techniques to improve similar prior art devices in the same way as claimed in the ’686 Patent.

Any reference or combination of references that anticipates or makes obvious an asserted independent claim also makes obvious any asserted claim dependent on that independent claim, as the element of each dependent ’686 Patent Asserted Claim was known by a person of ordinary skill at the time of the alleged invention, at least partially based on, but not limited by, the claim constructions implicit in Plaintiffs’ Infringement Contentions, and it would have been obvious to combine those known elements with the independent claims at least as a matter of common sense and routine innovation. Accordingly, Defendant contends that each Asserted Claim would have been obvious not only by the combinations described in these contentions, but also by any combination of references that renders obvious an Asserted Claim.

In addition to the specific examples of motivation provided above, Defendant reserves the right to rely on the disclosures of the references listed in Exhibits C1-C6 for additional motivation to combine. The above-identified examples of combinations are given merely to illustrate various motivations to combine and are not intended to provide an exhaustive list of every possible combination to which the motivation may apply. Defendant reserves the right to contend that the above-described motivations to combine apply to other combinations at the appropriate time, i.e., in expert reports regarding invalidity.

For at least the reasons described above, it would have been obvious to one of ordinary skill in the art to combine each prior art reference listed in Exhibits C1-C6 with any other reference

or references listed in Exhibits C1-C6 along with the knowledge of one of ordinary skill in the art to arrive at the inventions claims in the ’686 Patent. For example, and without limitation, the Asserted Claims of the ’686 Patent would have been obvious to one of ordinary skill in the art in view of the following combinations:

- Colgrove
- Colgrove + Madany
- Colgrove + Madany + one or more of Rajan, Blumenau, Johnson, Locasto, Leffler, and VxFS
- Colgrove + Rajan
- Colgrove + Rajan + one or more of Blumenau, Johnson, Locasto, Leffler, and VxFS
- Colgrove + Blumenau
- Colgrove + Blumenau + one or more of Johnson, Locasto, Leffler, and VxFS
- Colgrove + Johnson
- Colgrove + Johnson + one or more of Locasto, Leffler, and VxFS
- Colgrove + Locasto
- Colgrove + Locasto + one or more of Leffler, and VxFS
- Colgrove + Locasto + Leffler + VxFS
- Colgrove + Leffler
- Colgrove + Leffler + VxFS
- Colgrove + VxFS
- Madany
- Madany + Colgrove
- Madany + Colgrove + one or more of Rajan, Blumenau, Johnson, Locasto, Leffler, and VxFS
- Madany + Rajan
- Madany + Rajan + one or more of Blumenau, Johnson, Locasto, Leffler, and VxFS
- Madany + Blumenau
- Madany + Blumenau + one or more of Johnson, Locasto, Leffler, and VxFS
- Madany + Johnson
- Madany + Johnson + one or more of Locasto, Leffler, and VxFS
- Madany + Locasto
- Madany + Locasto + one or more of Leffler, and VxFS
- Madany + Locasto + Leffler + VxFS
- Madany + Leffler
- Madany + Leffler + VxFS
- Madany + VxFS
- Rajan
- Rajan + Colgrove
- Rajan + Colgrove + one or more of Madany, Blumenau, Johnson, Locasto, Leffler, and VxFS

- Rajan + Rajan
- Rajan + Rajan + one or more of Blumenau, Johnson, Locasto, Leffler, and VxFS
- Rajan + Blumenau
- Rajan + Blumenau + one or more of Johnson, Locasto, Leffler, and VxFS
- Rajan + Johnson
- Rajan + Johnson + one or more of Locasto, Leffler, and VxFS
- Rajan + Locasto
- Rajan + Locasto + one or more of Leffler, and VxFS
- Rajan + Locasto + Leffler + VxFS
- Rajan + Leffler
- Rajan + Leffler + VxFS
- Rajan + VxFS
- Lai
- Lai + Colgrove
- Lai + Colgrove + one or more of Madany, Blumenau, Johnson, Locasto, Leffler, and VxFS
- Lai + Rajan
- Lai + Rajan + one or more of Blumenau, Johnson, Locasto, Leffler, and VxFS
- Lai + Blumenau
- Lai + Blumenau + one or more of Johnson, Locasto, Leffler, and VxFS
- Lai + Johnson
- Lai + Johnson + one or more of Locasto, Leffler, and VxFS
- Lai + Locasto
- Lai + Locasto + one or more of Leffler, and VxFS
- Lai + Locasto + Leffler + VxFS
- Lai + Leffler
- Lai + Leffler + VxFS
- Lai + VxFS
- HDFS
- HDFS + Colgrove
- HDFS + Colgrove + one or more of Madany, Rajan, Blumenau, Johnson, Locasto, Leffler, and VxFS
- HDFS + Madany
- HDFS + Madany + one or more of Rajan, Blumenau, Johnson, Locasto, Leffler, and VxFS
- HDFS + Rajan
- HDFS + Rajan + one or more of Blumenau, Johnson, Locasto, Leffler, and VxFS
- HDFS + Blumenau
- HDFS + Blumenau + one or more of Johnson, Locasto, Leffler, and VxFS
- HDFS + Johnson
- HDFS + Johnson + one or more of Locasto, Leffler, and VxFS
- HDFS + Locasto
- HDFS + Locasto + one or more of Leffler and VxFS
- HDFS + Leffler
- HDFS + Leffler + VxFS
- HDFS + VxFS

- VxFS
- VxFS + Colgrove
- VxFS + Colgrove + one or more of Madany, Rajan, Blumenau, Johnson, Locasto, and Leffler
- VxFS + Madany
- VxFS + Madany + one or more of Rajan, Blumenau, Johnson, Locasto, and Leffler
- VxFS + Rajan
- VxFS + Rajan + one or more of Blumenau, Johnson, Locasto, and Leffler
- VxFS + Blumenau
- VxFS + Blumenau + one or more of Johnson, Locasto, and Leffler
- VxFS + Johnson
- VxFS + Johnson + one or more of Locasto and Leffler
- VxFS + Locasto
- VxFS + Locasto + Leffler
- VxFS + Leffler

As mentioned above, Defendant has not yet completed its search or discovery concerning additional prior art. Moreover, the exemplary combinations are provided based on Defendant's current understanding of the Asserted Claims and Plaintiffs' apparent view of the scope of those claims as shown, for example, in Plaintiffs' Infringement Contentions. Further, a *Markman* Order has not yet been issued in this case. As such, Defendant's inclusion of exemplary combinations does not preclude them from identifying other invalidating combinations as appropriate, and Defendant reserves the right to identify additional specific combinations as well as to detail and explain such combinations.

4. The '416 Patent

Pursuant to P.R. 3-3(a) and (b), Defendant identifies in Exhibits D1-D5 the prior art references that render obvious the Asserted Claims of the '416 Patent and include below exemplary combinations showing the obviousness of the '416 Patent Asserted Claims in view of the prior art. To the extent Plaintiffs contends that an element is not disclosed in any one of the anticipatory references described in Exhibits D1-D5, the limitation would have been obvious in light of the disclosures within the reference and the knowledge of one of skill in the art at the time of the '416

Patent. Moreover, to the extent Plaintiffs contends that an element is not disclosed in any one of the anticipatory references described in Exhibits D1-D5, such reference may be combined with any other references listed in Exhibits D1-D5 for such element, thereby rendering the claims invalid for obviousness.

To the extent a finder of fact determines that a limitation of any of the ’416 Patent Asserted Claims is not disclosed by one of the references identified above pursuant to P.R. 3-3(a), the claim is nevertheless unpatentable as obvious because they contain nothing that constitutes a patentable innovation. To the extent a finder of fact determines that a limitation of the ’416 Patent Asserted Claims is not anticipated, it does not go beyond combining familiar elements according to known methods to achieve predictable results or does more than choose between clear alternatives known to those of ordinary skill in the art.

(a) Obviousness Rationale

For at least the reasons described in these contentions, it would have been obvious to one of ordinary skill in the art to combine any of a number of prior art references, including any combination of those prior art references identified in Exhibits D1-D5 along with the knowledge of one of ordinary skill in the art to meet the limitations of the ’416 Patent Asserted Claims. Moreover, as mentioned above, Defendant has not yet completed its search or discovery concerning additional prior art. As such, Defendant’s inclusion of exemplary combinations does not preclude them from identifying other invalidating combinations as appropriate, and Defendant reserves the right to identify additional specific combinations as well as to detail and explain such combinations.

To the extent not anticipated, the ’416 Patent Asserted Claims represent no more than the result of ordinary variations of the prior art. Defendant further believes that no showing of a specific motivation to combine prior art is required to combine the references disclosed above and

in the attached charts, as each combination of art would have no unexpected results, and at most would simply represent a known alternative to one of skill in the art. *See KSR Int'l Co. v. Teleflex, Inc.*, 550 U.S. 398, 415-16 (2007) (rejecting the Federal Circuit's "rigid" application of the teaching, suggestion, or motivation to combine test, instead espousing an "expansive and flexible" approach). Indeed, the Supreme Court held that a person of ordinary skill in the art is "a person of ordinary creativity, not an automaton" and "in many cases a person of ordinary skill in the art will be able to fit the teachings of multiple patents together like pieces of a puzzle." *Id.* at 420-21. Nevertheless, in addition to the information contained elsewhere in these contentions, Defendant identifies motivation and reason to combine the cited art.

One or more combinations of the prior art references identified in Exhibits D1-D5 would have been obvious because these references would have been combined using: known methods to yield predictable results; known techniques in the same way; a simple substitution of one known, equivalent element for another to obtain predictable results; and/or a teaching, suggestion, or motivation in the prior art generally. In addition, it would have been obvious to try combining the prior art references identified above because there were only a finite number of predictable solutions and/or because known work in one field of endeavor prompted variations based on predictable design incentives and/or market forces either in the same field or a different one. Further, the combinations of the prior art references identified in Exhibits D1-D5 would have been obvious because the combinations represent known potential options with a reasonable expectation of success.

Additional evidence that there would have been a motivation to combine the prior art references identified above includes the interrelated teachings of multiple prior art references; common authorship; the effects of demands known to the design community or present in the

marketplace; the existence of a known problem for which there was an obvious solution encompassed by the ’416 Patent Asserted Claims; the existence of a known need or problem in the field of the endeavor at the time of the alleged invention(s); and the background knowledge that would have been possessed by a person having ordinary skill in the art.

Thus, the motivation to combine the teachings of the prior art references disclosed in Exhibits D1-D5 is found in the references themselves and also in: (1) the nature of the problem being solved; (2) the express, implied and inherent teachings of the prior art; (3) the knowledge of persons of ordinary skill in the art; (4) the predictable results obtained in combining the different elements of the prior art; (5) the predictable results obtained in simple substitution of one known element for another; (6) the use of a known technique to improve similar devices, methods, or products in the same way; (7) the predictable results obtained in applying a known technique to a known device, method, or product ready for improvement; (8) the finite number of identified predictable solutions that had a reasonable expectation of success; and (9) known work in various technological fields that could be applied to the same or different technological fields based on design incentives or other market forces.

Given the interrelated teachings of the prior art, the effects of demands known to the design community or present in the marketplace, and the background knowledge possessed by a person having ordinary skill in the art, it would have been obvious for one of ordinary skill in the art to combine these familiar elements, disclosed and/or embodied in the prior art listed in Exhibits D1-D5 to practice the ’416 Patent Asserted Claims. The identified references are in the same or similar technical fields, address the same technical issues, and suggest similar solutions. The ’416 Patent Asserted Claims are directed to a “method of creating a clustered computing system” where a computing cluster is activated based on compliance with licensing information. ’416 Patent,

Claims 1-8. Similarly, the prior art listed in Exhibits D1-D5 are related to clustered computing systems and their management, including with respect to licensing compliance. The ’416 Patent Asserted Claims merely unite old elements, well known in the field, with no change in their respective function or result. Given the interrelated teachings of the prior art, the effects of demands known to the design community or present in the marketplace, and the background knowledge possessed by a person having ordinary skill in the art, it would have been obvious for one of ordinary skill in the art to combine these familiar elements, disclosed and/or embodied in the prior art listed above to practice the ’416 Patent Asserted Claims.

Given the interrelated teachings of the prior art, the effects of demands known to the design community or present in the marketplace, and the background knowledge possessed by a person having ordinary skill in the art, it would have been obvious for one of ordinary skill in the art to combine these familiar elements, disclosed and/or embodied in the prior art listed in Exhibits D1-D5 to practice the ’416 Patent Asserted Claims. The identified references are in the same or similar technical fields, address the same technical issues, and suggest similar solutions.

All of the ’416 Patent Asserted Claims are directed to a “method of creating a clustered computing system” where a computing cluster is activated based on compliance with licensing information. Such technology, at least partially based on, but not limited by, the claim constructions implicit in Plaintiffs’ Infringement Contentions, was widely known before the alleged priority date of the ’416 Patent, as evidenced by the references in Exhibits D1-D5. *See, e.g.*, Veritas Cluster Server at 59-61, 96-97, 339, 558, 591-593, 599, 606, 622-23; Bram at [0243]-[0293]; Sparks at 17:66-18:26, Figure 4; IBM LUMR 137-140; Novell 1 at [9], [18], [32]; Novell 2 at [17], [21], [36], [44].

One of ordinary skill in the art would have been motivated to combine any of the references in Exhibits D1-D5 because at the time of the alleged invention creating a clustered computing system that complies with certain parameters was a common problem with a well known solution. In particular, common problems with conventional techniques for creating a clustered computing system according to certain parameters were known to persons of ordinary skill in the art, and embodying such parameters in licensing information was a well-known solution to ensure compliance, as evidenced by the references in Exhibits D1-D5. *See, e.g.*, Veritas Cluster Server at 59-61, 96-97, 339, 558, 591-593, 599, 606, 622-23; Bram at [0243]-[0293]; Sparks at 17:66-18:26, Figure 4; IBM LUMR 137-140; Novell 1 at [9], [12], [16], [17], [18]; Novell 2 at [9], [17]-[19], [21]; Novell 4 at [1].

One of ordinary skill in the art would have also been motivated to incorporate licensing capabilities in a distributed/clustered computing system to prevent a cluster's users from violating laws or incurring civil penalties resulting from the unlicensed use of computer systems and/or programs. For example, industry groups widely warned that companies could be held liable for employees' unauthorized installations, face severe civil damages, and even criminal penalties. From the perspective of one of ordinary skill in the art, incorporating license-based controls into cluster creation would have been a straightforward, low-cost way to reduce legal exposure and ensure compliant use across clusters.

Further, the prior art references provide motivations to combine because they explicitly suggest utilizing the teachings and disclosures of other references. For example, one of ordinary skill in the art would have also been motivated to incorporate licensing capabilities in a distributed/clustered computing system to prevent the use of "un-purchased, unauthorized, and/or un-needed functionality." *See, e.g.*, Bram at [0002]; *see also* Veritas Cluster Server at 59-61, 96-

97, 339, 558, 591-593, 599, 606, 622-23. It would have been obvious to do so to "track applied licenses" within the system. *See, e.g.*, Bram at [0255], [0268]; *see also* Veritas Cluster Server at 59-61, 96-97, 339, 558, 591-593, 599, 606, 622-23; IBM LUMR at 294; Novell 1 at [9], [12], [16], [17], [18]; Novell 2 at [9], [17]-[19], [21]; Novell 4 at [1].

In accordance with these advances, the prior art could have been combined according to methods known to those of ordinary skill within the field of the '416 Patent to yield predictable results. The substitution of one element in how compliance information for a cluster is embodied or maintained could have been predictably achieved by one of ordinary skill at the time of the alleged invention. One of ordinary skill in the art would have been aware of the desirability and benefits of forming a cluster that complies with licensing requirements, and would have been able to set such licensing requirements as a condition to activating a computing cluster. Those of ordinary skill in the art could have employed known techniques to improve similar prior art devices in the same way as claimed in the '416 Patent.

In addition, one of ordinary skill in the art would be motivated to combine the prior art references because the elements found in the Asserted Claims are well known in the art, as evidenced by the references in Exhibits D1-D5.

Any reference or combination of references that anticipates or makes obvious an asserted independent claim also makes obvious any asserted claim dependent on that independent claim, as the element of each dependent '416 Patent Asserted Claim was known by a person of ordinary skill at the time of the alleged invention, at least partially based on, but not limited by, the claim constructions implicit in Plaintiffs' Infringement Contentions, and it would have been obvious to combine those known elements with the independent claims at least as a matter of common sense and routine innovation. Accordingly, Defendant contends that each Asserted Claim would have

been obvious not only by the combinations described in these contentions, but also by any combination of references that renders obvious an Asserted Claim.

In addition to the specific examples of motivation provided above, Defendant reserves the right to rely on the disclosures of the references listed in Exhibits D1-D5 for additional motivation to combine. The above-identified examples of combinations are given merely to illustrate various motivations to combine and are not intended to provide an exhaustive list of every possible combination to which the motivation may apply. Defendant reserves the right to contend that the above-described motivations to combine apply to other combinations at the appropriate time, i.e., in expert reports regarding invalidity.

For at least the reasons described above, it would have been obvious to one of ordinary skill in the art to combine each prior art reference listed in Exhibits D1-D5 with any other reference or references listed in Exhibits D1-D5 along with the knowledge of one of ordinary skill in the art to arrive at the inventions claims in the ’416 Patent. For example, and without limitation, the Asserted Claims of the ’416 Patent would have been obvious to one of ordinary skill in the art in view of the following combinations:

- Sparks
- Sparks + Bram
- Sparks + Bram + one or more of Veritas Cluster Server, IBM LUMR, Saha, and Srivastava
- Sparks + Veritas Cluster Server
- Sparks + Veritas Cluster Server + one or more of IBM LUMR, Saha, and Srivastava
- Sparks + IBM LUMR
- Sparks + IBM LUMR + one or more of Saha and Srivastava
- Sparks + Saha
- Sparks + Saha + Srivastava
- Sparks + Srivastava
- IBM LUMR
- IBM LUMR + Sparks
- IBM LUMR + Sparks + one or more of Veritas Cluster Server, Bram, Saha, and Srivastava
- IBM LUMR + Veritas Cluster Server
- IBM LUMR + Veritas Cluster Server + one or more of Bram, Saha, and Srivastava

- IBM LUMR + Bram
- IBM LUMR + Bram + one or more of Saha and Srivastava
- IBM LUMR + Saha
- IBM LUMR + Saha + Srivastava
- IBM LUMR + Srivastava
- Veritas Cluster Server
- Veritas Cluster Server + Sparks
- Veritas Cluster Server + Sparks + one or more of Bram, IBM LUMR, and Saha
- Veritas Cluster Server + Bram
- Veritas Cluster Server + Bram + one or more of IBM LUMR, Saha, and Srivastava
- Veritas Cluster Server + IBM LUMR
- Veritas Cluster Server + IBM LUMR + one or more of Saha and Srivastava
- Veritas Cluster Server + Saha
- Veritas Cluster Server + Saha + Srivastava
- Veritas Cluster Server + Srivastava
- Borg
- Borg + Sparks
- Borg + Sparks + one or more of Veritas Cluster Server, Bram, IBM LUMR, Saha, and Srivastava
- Borg + Veritas Cluster Server
- Borg + Veritas Cluster Server + one or more of Bram, IBM LUMR, Saha, and Srivastava
- Borg + Bram
- Borg + Bram + one or more of IBM LUMR, Saha, and Srivastava
- Borg + IBM LUMR
- Borg + IBM LUMR + one or more of Saha and Srivastava
- Borg + Saha
- Borg + Saha + Srivastava
- Borg + Srivastava
- Novell Cluster Services
- Novell Cluster Services + Sparks
- Novell Cluster Services + Sparks + one or more of Veritas Cluster Server, Bram, IBM LUMR, Saha, and Srivastava
- Novell Cluster Services + Veritas Cluster Server
- Novell Cluster Services + Veritas Cluster Server + one or more of Bram, IBM LUMR, Saha, and Srivastava
- Novell Cluster Services + Bram
- Novell Cluster Services + Bram + one or more of IBM LUMR, Saha, and Srivastava
- Novell Cluster Services + IBM LUMR
- Novell Cluster Services + IBM LUMR + one or more of Saha and Srivastava
- Novell Cluster Services + Saha
- Novell Cluster Services + Saha + Srivastava
- Novell Cluster Services + Srivastava

As mentioned above, Defendant has not yet completed its search or discovery concerning additional prior art. Moreover, the exemplary combinations are provided based on Defendant's current understanding of the Asserted Claims and Plaintiffs' apparent view of the scope of those claims as shown, for example, in Plaintiffs' Infringement Contentions. Further, a *Markman* Order has not yet been issued in this case. As such, Defendant's inclusion of exemplary combinations does not preclude them from identifying other invalidating combinations as appropriate, and Defendant reserves the right to identify additional specific combinations as well as to detail and explain such combinations.

VI. P.R. 3-3(D) – OTHER GROUNDS FOR INVALIDITY – 35 U.S.C. § 112

A. Legal Standards and Reservation of Right

Pursuant to P.R. 3-3(d), Defendants contend that certain claims of the Asserted Patents are invalid under 35 U.S.C. § 112 because: (1) the claims are indefinite; (2) the claims are not enabled; and/or (3) the claims lack adequate written description. Defendants' contentions that the following claims are invalid under 35 U.S.C. § 112 are made in the alternative, and do not constitute, and should not be interpreted as, admissions regarding the construction or scope of the claims of the Asserted Patents, or that any of the claims of the Asserted Patents are not anticipated or rendered obvious by any prior art. These contentions are based on Defendants' current understanding of Stratasys's Infringement Contentions. To the extent Stratasys contends that the prior art references identified above would not enable a person of ordinary skill to make or use the elements of the Asserted Claims against which they are cited, and to the extent Stratasys contends that the Asserted Claims cover something different from what Defendants understand them to cover, the Asserted Claims may not comply with the enablement, written description, and/or definiteness requirements of 35 U.S.C. § 112(a) and (b). Because compliance with the requirements of 35 U.S.C. § 112(a) and (b) depends on the construction of those phrases—and no claim construction positions have been exchanged, no claim construction order issued, and no expert discovery undertaken—Defendants' positions on written description, enablement, and/or indefiniteness are necessarily preliminary at this early stage of the case. Defendants reserve all rights to amend or further revise

these contentions based on further developments in the case in accordance with the Court's Rules or as otherwise authorized by the Court.

The written description and enablement requirements are analyzed by comparing the claims with the disclosure in the specification. If the claimed invention does not appear in the specification, the claim fails regardless of whether one of skill in the art could make or use the claimed invention. *Ariad Pharms., Inc. v. Eli Lilly & Co*., 598 F.3d 1336, 1348 (Fed. Cir. 2010). To satisfy the written description requirement, the patentee must convey to those skilled in the art that, as of the filing date, the applicant was in possession of the invention, and demonstrate that possession by disclosing the invention in the specification. *Id.* at 1352. To satisfy the enablement requirement, a patentee must "describe the manner and process of making and using the invention so as to enable a person of skill in the art to make and use the full scope of the invention without undue experimentation." *LizardTech, Inc. v. Earth Res. Mapping, Inc*., 424 F.3d 1336, 1344-45 (Fed. Cir. 2005). A patent must also be precise enough to afford clear notice to what is claimed. *Nautilus, Inc. v. Biosig Instruments, Inc.*, 572 U.S. 898, 899 (2014). A patent is invalid for indefiniteness if its claims, read in light of the specification delineating the patent, and the prosecution history, fail to inform, with reasonable certainty, those skilled in the art about the scope of the invention. Id. at 898-99. The standard for assessing if a patent claim is sufficiently definite to satisfy the statutory requirement is whether "one skilled in the art would understand the bounds of the claim when read in light of the specification." *Novo Indus., L.P. v. Micro Molds Corp*., 350 F.3d 1348, 1358 (Fed. Cir. 2003).

A claim term can be indefinite based on multiple grounds ranging from the substantive concerns to unresolvable drafting errors, each of which can be fatal to the validity of the claims as a matter of law. For example, the Federal Circuit has repeatedly held that apparatus claims that contain method claim limitations are indefinite because it is impossible to determine when direct infringement occurs. *See, e.g., Rembrandt Data Techs., LP v. AOL, LLC*, 641 F.3d 1331, 1339-40 (Fed. Cir. 2011) (an independent claim that recited both an apparatus and a method of using that apparatus was indefinite, as were its dependent claims); *IPXL Holdings v. Amazon.com*, 430 F.3d

1377, 1384 (Fed. Cir. 2005); *In re Katz Interactive Call Processing Patent Litigation*, 639 F.3d 1303, 1318 (Fed. Cir. 2011) (mixed claims "create confusion as to when direct infringement occurs because they are directed both to systems and to actions performed by" users). Claim terms that lack antecedent basis are indefinite. *See, e.g., Allen Eng'g Corp. v. Bartell Indus., Inc.*, 299 F.3d 1336, 1348-49 (Fed. Cir. 2002) (claim ending in the middle of a claim limitation was indefinite because it was "impossible to discern the scope of such a truncated limitation"). Furthermore, means plus function claims, which invoke 35 U.S.C. § 112 ¶ 6, may be invalid as indefinite where a patent owner has failed to disclose adequate corresponding structure linked to the recited claim functionality. *Noah Sys., Inc. v. Intuit Inc., 675 F.3d 1302*, 1311-12 (Fed. Cir. 2012).

B. Identification of Terms and Phrases

Pursuant to Rule 3-3(d), Defendant hereby identifies grounds of invalidity for the Asserted Patents based on lack of written description under 35 U.S.C. § 112, first paragraph; lack of enablement under 35 U.S.C. § 112, first paragraph; and indefiniteness under 35 U.S.C. § 112, second paragraph. These contentions shall not be construed as an admission that any claim construction advanced by Defendant in this case is in any way inconsistent, flawed, or erroneous. Nor should these contentions prevent Defendant from advancing claim construction and/or non-infringement positions in lieu of, or in addition to, invalidity positions. Further, these contentions shall not be construed as an admission of or acquiescence to Plaintiffs' purported construction of the claim language or of other positions advanced by Plaintiffs during the course of this litigation. Defendant's Invalidity Contentions under 35 U.S.C. § 112 may depend, in part, on the Court's claim construction, as well as Plaintiffs' alleged scope of the Asserted Claims. [3]

Consequently, Defendant only identifies the issues under 35 U.S.C. § 112 of which it is presently aware.

[3] Listed claims also include all Asserted Claims dependent thereon, even if those claims are not individually listed.

’832 Patent

Asserted Claim(s)	Term / Phrase	Invalidity Under 35 U.S.C. § 112
1, 25	“intercepting communications”	The claim limitation is invalid under 35 U.S.C. § 112 because the specification fails to describe or enable the full breadth of the claims. and/or The claim limitation is invalid under 35 U.S.C. § 112 because it fails to inform, with reasonable certainty, those skilled in the art about the scope of the invention.
1	“analyzing . . . relative to a threshold value”	The claim limitation is invalid under 35 U.S.C. § 112 because the specification fails to describe or enable the full breadth of the claims. and/or The claim limitation is invalid under 35 U.S.C. § 112 because it fails to inform, with reasonable certainty, those skilled in the art about the scope of the invention.
1	“automatically reallocating at least some data on said storage device”	The claim limitation is invalid under 35 U.S.C. § 112 because the specification fails to describe or enable the full breadth of the claims. and/or The claim limitation is invalid under 35 U.S.C. § 112 because it fails to inform, with reasonable certainty, those skilled in the art about the scope of the invention.
1	“enhance continued operation of the storage device”	The claim limitation is invalid under 35 U.S.C. § 112 because the specification fails to describe or enable the full breadth of the claims. and/or The claim limitation is invalid under 35 U.S.C. § 112 because it fails to inform, with reasonable certainty, those skilled in the art about the scope of the invention.
5, 6	“determining . . . based on said intercepted communications”	The claim limitation is invalid under 35 U.S.C. § 112 because the specification fails to describe or enable the full breadth of the claims. and/or The claim limitation is invalid under 35 U.S.C. § 112 because it fails to inform, with reasonable certainty, those skilled in the art about the scope of the invention.

8	"deriving . . . based on said	The claim limitation is invalid under 35 U.S.C. § 112 because the specification fails to describe or enable the full breadth of the claims. and/or The claim limitation is invalid under 35 U.S.C. § 112 because it fails to inform, with reasonable certainty, those skilled in the art about the scope of the invention.
10	"wherein reallocating at least some data on said storage device is based on usage patterns of said data"	The claim limitation is invalid under 35 U.S.C. § 112 because the specification fails to describe or enable the full breadth of the claims. and/or The claim limitation is invalid under 35 U.S.C. § 112 because it fails to inform, with reasonable certainty, those skilled in the art about the scope of the invention.
25	"reallocating at least some of said data . . . based on said analyzed communications"	The claim limitation is invalid under 35 U.S.C. § 112 because the specification fails to describe or enable the full breadth of the claims. and/or The claim limitation is invalid under 35 U.S.C. § 112 because it fails to inform, with reasonable certainty, those skilled in the art about the scope of the invention.
25	"reallocating at least some of said data on said storage device"	The claim limitation is invalid under 35 U.S.C. § 112 because the specification fails to describe or enable the full breadth of the claims. and/or The claim limitation is invalid under 35 U.S.C. § 112 because it fails to inform, with reasonable certainty, those skilled in the art about the scope of the invention.
25	"enhance the performance of said storage"	The claim limitation is invalid under 35 U.S.C. § 112 because the specification fails to describe or enable the full breadth of the claims. and/or The claim limitation is invalid under 35 U.S.C. § 112 because it fails to inform, with reasonable certainty, those skilled in the art about the scope of the invention.

’332 Patent

Asserted Claim(s)	Term / Phrase	Invalidity Under 35 U.S.C. § 112
1	“determining by a discovery services module which of the one or more grid nodes are running an application associated with the added new version of the application release bundle upon adding the new version of the application release bundle in the repository server”	The claim limitation is invalid under 35 U.S.C. § 112 because the specification fails to describe or enable the full breadth of the claims. and/or The claim limitation is invalid under 35 U.S.C. § 112 because it fails to inform, with reasonable certainty, those skilled in the art about the scope of the invention.
1	“a type of data transfer protocol to use”	The claim limitation is invalid under 35 U.S.C. § 112 because the specification fails to describe or enable the full breadth of the claims. and/or The claim limitation is invalid under 35 U.S.C. § 112 because it fails to inform, with reasonable certainty, those skilled in the art about the scope of the invention.
1	“associated grid node”	The claim limitation is invalid under 35 U.S.C. § 112 because the specification fails to describe or enable the full breadth of the claims. and/or The claim limitation is invalid under 35 U.S.C. § 112 because it fails to inform, with reasonable certainty, those skilled in the art about the scope of the invention.
1	“hot deploying/redeploying the new version of the application release bundle on running one or more application servers in an associated grid node using an appropriate hot deployment plug-in based on the data transfer protocol by a respective one of the client application managers”	The claim limitation is invalid under 35 U.S.C. § 112 because the specification fails to describe or enable the full breadth of the claims. and/or The claim limitation is invalid under 35 U.S.C. § 112 because it fails to inform, with reasonable certainty, those skilled in the art about the scope of the invention.

2	"selecting and invoking an appropriate hot deployment plug-in"	The claim limitation is invalid under 35 U.S.C. § 112 because the specification fails to describe or enable the full breadth of the claims. and/or The claim limitation is invalid under 35 U.S.C. § 112 because it fails to inform, with reasonable certainty, those skilled in the art about the scope of the invention.
2, 3	"hot deploying/redeploying the new version of the application release bundle on running one or more application servers using the appropriate hot deployment plug-in in the associated grid node by the respective client application manager"	The claim limitation is invalid under 35 U.S.C. § 112 because the specification fails to describe or enable the full breadth of the claims. and/or The claim limitation is invalid under 35 U.S.C. § 112 because it fails to inform, with reasonable certainty, those skilled in the art about the scope of the invention.
3	"using the appropriate hot deployment plug-in by a data transfer client associated with a respective one of the client application managers."	The claim limitation is invalid under 35 U.S.C. § 112 because the specification fails to describe or enable the full breadth of the claims. and/or The claim limitation is invalid under 35 U.S.C. § 112 because it fails to inform, with reasonable certainty, those skilled in the art about the scope of the invention.
5	"repository sewer"	The claim limitation is invalid under 35 U.S.C. § 112 because the specification fails to describe or enable the full breadth of the claims. and/or The claim limitation is invalid under 35 U.S.C. § 112 because it fails to inform, with reasonable certainty, those skilled in the art about the scope of the invention.
7	"data transfer plug-in"	The claim limitation is invalid under 35 U.S.C. § 112 because the specification fails to describe or enable the full breadth of the claims. and/or The claim limitation is invalid under 35 U.S.C. § 112 because it fails to inform, with reasonable certainty, those skilled in the art about the scope of the invention.

7	"wherein the data transfer plug-in includes protocols selected from the group consisting of ftp, http, gridftp, tcp, and udp"	The claim limitation is invalid under 35 U.S.C. § 112 because the specification fails to describe or enable the full breadth of the claims. and/or The claim limitation is invalid under 35 U.S.C. § 112 because it fails to inform, with reasonable certainty, those skilled in the art about the scope of the invention.

'686 Patent

Asserted Claim(s)	Term / Phrase	Invalidity Under 35 U.S.C. § 112
1	"mapping function"	The claim limitation is invalid under 35 U.S.C. § 112 because the specification fails to describe or enable the full breadth of the claims. and/or The claim limitation is invalid under 35 U.S.C. § 112 because it fails to inform, with reasonable certainty, those skilled in the art about the scope of the invention.
1	"associated with a file" "associated with said file"	The claim limitation is invalid under 35 U.S.C. § 112 because the specification fails to describe or enable the full breadth of the claims. and/or The claim limitation is invalid under 35 U.S.C. § 112 because it fails to inform, with reasonable certainty, those skilled in the art about the scope of the invention.
1	"obtaining mapped data block numbers after applying the mapping function"	The claim limitation is invalid under 35 U.S.C. § 112 because the specification fails to describe or enable the full breadth of the claims. and/or The claim limitation is invalid under 35 U.S.C. § 112 because it fails to inform, with reasonable certainty, those skilled in the art about the scope of the invention.
1	"wherein the mapped data bock numbers are addresses of data of the file in a storage device"	The claim limitation is invalid under 35 U.S.C. § 112 because the specification fails to describe or enable the full breadth of the claims. and/or

		The claim limitation is invalid under 35 U.S.C. § 112 because it fails to inform, with reasonable certainty, those skilled in the art about the scope of the invention.
3	"obtaining the mapped data block numbers of the file based on the mapping function that is applied to the data block numbers"	The claim limitation is invalid under 35 U.S.C. § 112 because the specification fails to describe or enable the full breadth of the claims. and/or The claim limitation is invalid under 35 U.S.C. § 112 because it fails to inform, with reasonable certainty, those skilled in the art about the scope of the invention.
4	"applying the mapping function to the data block numbers in order to obtain the mapped data block numbers"	The claim limitation is invalid under 35 U.S.C. § 112 because the specification fails to describe or enable the full breadth of the claims. and/or The claim limitation is invalid under 35 U.S.C. § 112 because it fails to inform, with reasonable certainty, those skilled in the art about the scope of the invention.
6	"selecting a complexity level of the mapping function in order to set a security level and efficiency of the mapping function"	The claim limitation is invalid under 35 U.S.C. § 112 because the specification fails to describe or enable the full breadth of the claims. and/or The claim limitation is invalid under 35 U.S.C. § 112 because it fails to inform, with reasonable certainty, those skilled in the art about the scope of the invention.
7	"The method of claim 1, wherein the data block numbers are addresses of data of the file in the storage device if the mapping function is not applied to the data block numbers."	The claim limitation is invalid under 35 U.S.C. § 112 because the specification fails to describe or enable the full breadth of the claims. and/or The claim limitation is invalid under 35 U.S.C. § 112 because it fails to inform, with reasonable certainty, those skilled in the art about the scope of the invention.
8	"the mapping function prevents copying"	The claim limitation is invalid under 35 U.S.C. § 112 because the specification fails to describe or enable the full breadth of the claims. and/or The claim limitation is invalid under 35 U.S.C. § 112 because it fails to inform, with reasonable certainty, those skilled in the art about the scope of the invention.

’416 Patent

Asserted Claim(s)	Term / Phrase	Invalidity Under 35 U.S.C. § 112
1	“memory module associated with a computing node”	The claim limitation is invalid under 35 U.S.C. § 112 because the specification fails to describe or enable the full breadth of the claims. and/or The claim limitation is invalid under 35 U.S.C. § 112 because it fails to inform, with reasonable certainty, those skilled in the art about the scope of the invention.
1	“bundle-type parameter”	The claim limitation is invalid under 35 U.S.C. § 112 because the specification fails to describe or enable the full breadth of the claims. and/or The claim limitation is invalid under 35 U.S.C. § 112 because it fails to inform, with reasonable certainty, those skilled in the art about the scope of the invention.
1	“bundle-type characteristic”	The claim limitation is invalid under 35 U.S.C. § 112 because the specification fails to describe or enable the full breadth of the claims. and/or The claim limitation is invalid under 35 U.S.C. § 112 because it fails to inform, with reasonable certainty, those skilled in the art about the scope of the invention.
1	“node license parameter”	The claim limitation is invalid under 35 U.S.C. § 112 because the specification fails to describe or enable the full breadth of the claims. and/or The claim limitation is invalid under 35 U.S.C. § 112 because it fails to inform, with reasonable certainty, those skilled in the art about the scope of the invention.
1	“licensing information includes a bundle-type parameter that identifies a size of the cluster and at least one additional bundle-type characteristic of the cluster, and one or more node license parameters that identifies a	The claim limitation is invalid under 35 U.S.C. § 112 because the specification fails to describe or enable the full breadth of the claims. and/or The claim limitation is invalid under 35 U.S.C. § 112 because it fails to inform, with reasonable certainty, those skilled in the art about the scope of the invention.

	characteristic of a computing node”	
1	“initializing the computing cluster in a first computing node”	The claim limitation is invalid under 35 U.S.C. § 112 because the specification fails to describe or enable the full breadth of the claims. and/or The claim limitation is invalid under 35 U.S.C. § 112 because it fails to inform, with reasonable certainty, those skilled in the art about the scope of the invention.
1	“activating the computing cluster when the computing cluster includes a number of nodes that complies with the bundle-type parameter”	The claim limitation is invalid under 35 U.S.C. § 112 because the specification fails to describe or enable the full breadth of the claims. and/or The claim limitation is invalid under 35 U.S.C. § 112 because it fails to inform, with reasonable certainty, those skilled in the art about the scope of the invention.
6	“brand-type associated with the computing node”	The claim limitation is invalid under 35 U.S.C. § 112 because the specification fails to describe or enable the full breadth of the claims. and/or The claim limitation is invalid under 35 U.S.C. § 112 because it fails to inform, with reasonable certainty, those skilled in the art about the scope of the invention.
7	“inhibits operation of the computing node”	The claim limitation is invalid under 35 U.S.C. § 112 because the specification fails to describe or enable the full breadth of the claims. and/or The claim limitation is invalid under 35 U.S.C. § 112 because it fails to inform, with reasonable certainty, those skilled in the art about the scope of the invention.
7	“The method of claim 1, wherein the license check comprises…”	The claim limitation is invalid under 35 U.S.C. § 112 because the specification fails to describe or enable the full breadth of the claims. and/or The claim limitation is invalid under 35 U.S.C. § 112 because it fails to inform, with reasonable certainty, those skilled in the art about the scope of the invention.

VII. SUBJECT MATTER INELIGIBILITY – 35 U.S.C. § 101

Defendant contends that certain Asserted Claims are invalid under 35 U.S.C. § 101 because the claims are not directed to patent-eligible subject matter. Defendant's contentions that the Asserted Claims are invalid under 35 U.S.C. § 101 do not constitute, and should not be interpreted as, admissions regarding the construction or scope of the claims of the Asserted Claims, or that any of the Asserted Claims are not anticipated or rendered obvious by prior art.

35 U.S.C. § 101 provides that "[w]hoever invents or discovers any new and useful process, machine, manufacture, or composition of matter, or any new and useful improvement thereof, may obtain a patent therefor[.]" Because abstract ideas form the "basic tools of scientific and technological work," they are unpatentable subject matter under 35 U.S.C. § 101. *Alice Corp. v. CLS Bank Int'l*, 573 U.S. 208, 216 (2014). "The Supreme Court provided a two-part test for assessing patent eligibility under Section 101." *Certain Elec. Devices, Including Streaming Players, Televisions, Set Top Boxes, Remote Controllers, & Components Thereof,* Inv. No. 337-TA-1200, Order No. 21, 2020 WL 6441422 at *4 (Sept. 14, 2020).

Under the first step of *Alice* ("Step One"), a court must decide whether the claims are directed to ineligible subject matter, such as an abstract idea. *RecogniCorp, LLC v. Nintendo Co.*, 855 F.3d 1322, 1326 (Fed. Cir. 2017); *Internet Patents Corp. v. Active Network, Inc.*, 790 F.3d 1343, 1346 (Fed. Cir. 2015). To do so, a court examines the claims to determine whether their "character as a whole," or their "focus," is an abstract idea. *Elec. Power Grp., LLC v. Alstom S.A.*, 830 F.3d 1350, 1353 (Fed. Cir. 2016). This examination entails "identify[ing] and defin[ing] whatever fundamental concept appears wrapped up" in the claims. *Accenture Glob. Servs., GmbH v. Guidewire Software, Inc.*, 728 F.3d 1336, 1341 (Fed. Cir. 2013) (internal quotation marks and citations omitted). Once ascertained, the court then determines whether that character is "directed to excluded subject matter," such as an abstract idea. *Enfish, LLC v. Microsoft Corp.*, 822 F.3d

1327, 1335 (Fed. Cir. 2016) (internal citation omitted). This inquiry often asks whether the claims' character is directed to "a specific means or method" for improving technology or whether it is simply directed to an abstract end-result. *RecogniCorp,* 855 F.3d at 1326. If the claims are not directed to an abstract idea, the inquiry ends. *Thales Visionix Inc. v. United States*, 850 F.3d 1343, 1349 (Fed. Cir. 2017). To resolve this question, "it is often helpful to ask whether the claims are directed to 'an improvement in the functioning of a computer,' or merely 'adding conventional computer components to well-known business practices.'" *Affinity Labs. of Texas, LLC v. Amazon.com Inc.*, 838 F.3d 1266, 1270 (Fed. Cir. 2016) (quoting *Enfish, LLC v. Microsoft Corp.*, 822 F.3d 1327, 1338 (Fed. Cir. 2016)). "Generalized steps to be performed on a computer using conventional computer activity are abstract[.]" *RecogniCorp,* 855 F.3d at 1326 (internal quotation marks omitted). And "[c]laims directed to generalized steps to be performed on a computer using conventional computer activity are not patent eligible." *Affinity Labs.*, 838 F.3d at 1270 (citing *Internet Patents Corp. v. Active Network, Inc.*, 790 F.3d 1343, 1348-49 (Fed. Cir. 2015)).

If the claims, as here, are directed to one or more abstract ideas, then the court advances to the second step of *Alice* ("Step Two"), where the claim elements must be scrutinized "both individually and 'as an ordered combination' to determine whether the additional elements 'transform the nature of the claim' into a patent-eligible application." *Enfish,* 822 F.3d at 1354 (quoting *Alice*, 573 U.S. at 217). At Step Two, the court searches for an "'inventive concept' sufficient to 'transform the nature of the claim into a patent-eligible application.'" *RecogniCorp,* 855 F.3d at 1327 (quoting Alice, 573 U.S. at 217). To save a patent at Step Two, an inventive concept must be evident in the claims. *See Alice,* 573 U.S. at 221; *Synopsys, Inc. v. Mentor Graphics Corp.*, 839 F.3d 1138, 1149 (Fed. Cir. 2016). The "inventive concept" must also "involve more than performance of well-understood, routine, and conventional activities previously known

to the industry." *Berkheimer v. HP Inc.*, 881 F.3d 1360, 1367 (Fed. Cir. 2018); *Mayo Collaborative Servs. v. Prometheus Labs., Inc.*, 566 U.S. 66, 73 (2012); *Certain Elec. Devices*, 2020 WL 6441422 at *4. The Federal Circuit's "precedent is clear that merely adding computer functionality to increase the speed or efficiency of the process does not confer patent eligibility on an otherwise abstract idea." *Ericsson Inc. v. TCL Commc'n Tech. Holdings Ltd.*, 955 F.3d 1317, 1330 (Fed. Cir. 2020) (citing *Intellectual Ventures I LLC v. Capital One Bank (USA)*, 792 F.3d 1363, 1370 (Fed. Cir. 2015)). In addition, limitations that simply restrict the invention to a single field of use or merely add "token post-solution" requirements also fail to impart patentability. *Bilski v. Kappos*, 561 U.S. 593, 612 (2010).

As set forth in the Court's Standing Order Regarding Subject Matter Eligibility Contentions, attached as Exhibits E-1 and E-3 are charts identifying the following for the Asserted Claims of the '686 patent, '832 patent, and '416 patent respectively:

- each exception to eligibility (e.g., abstract idea) to which each Asserted Claim is directed and the factual and legal basis therefor;
- whether one or more of the Asserted Claims are representative of any other Asserted Claims;
- a description of the industry, at the relevant time, in which the Asserted Claims are alleged to be well understood, routine, and conventional, and the factual and legal basis therefor;
- a description of how each element of each Asserted Claim, both individually and in combination with the other elements of that claim, was well understood, routine, and conventional, in the relevant industry at the relevant time, and the legal and factual basis therefor; and
- other factual and legal bases for how the Asserted Claims are otherwise ineligible for patent protection.

Additional evidence regarding the state of the industry prior to the filing of the Asserted Patents, how each element of each Asserted Claim was well understood, routine, and conventional, and other evidence supporting the ineligibility of the Asserted Claims is contained in foregoing Sections and related Exhibits (all of which are incorporated herein by reference), and in Defendants' 3-4(b) productions of prior art, which include numerous references disclosing the

alleged invention claimed in the Asserted Patents and the elements thereof. Defendant reserves the right to rely on percipient and/or expert testimony to supplement, summarize, and/or explain the state of the industry prior to the filing of the Asserted Patents, how each element of each Asserted Claim was well understood, routine, and conventional, and other evidence supporting the ineligibility of the Asserted Claims. Any such witnesses will be disclosed pursuant to the Federal Rules of Civil Procedure and the Court's Docket Control Order in this case for initial, additional, and expert disclosures.

VIII. ACCOMPANYING DOCUMENT PRODUCTION

In connection with these Invalidity Contentions, pursuant to P.R. 3-4(a), Defendant confirms that it does not possess, have custody over, or control any source code, specifications, schematics, flow charts, artwork, formulas, or other documentation sufficient to show the operation of any aspects or elements of an Accused Instrumentality identified by Plaintiffs in its P.R. 3-1(c) charts.

Pursuant to P.R. 3-4(b), Defendant produces a copy of each item of prior art identified herein. These prior art references and corroborating evidence are cited in attached invalidity claim charts. Defendant will also make available for inspection any prior art systems or devices upon request to the extent Defendant acquires such systems or devices. References that were cited during prosecution of the Asserted Patents may not be contained in Defendant's production as they are not required to be under the local patent rules. Defendant's search for prior art references, additional documentation, and/or corroborating evidence concerning prior art systems and devices is ongoing. Accordingly, Defendant reserves the right to supplement its production as Defendant obtains additional prior art references, documentation, and/or corroborating evidence concerning invalidity during the course of discovery.

Dated: November 19, 2025

Respectfully Submitted

FISH & RICHARDSON P.C.

By: */s/ Warren K. Mabey, Jr.*

David M. Hoffman
Texas Bar No. 24046084
hoffman@fr.com
111 Congress Avenue, Suite 2000
Austin, TX 78701
Tel: (512) 472-5070
Fax: (512) 320-8935

Warren K. Mabey, Jr. (*pro hac vice*)
mabey@fr.com
Kevin P. Seltzer (*pro hac vice*)
seltzer@fr.com
222 Delaware Avenue, Suite 1700
Wilmington, DE 19801
Tel: (302) 652-5070
Fax: (302) 652-0607

Elliot Scher (*pro hac vice*)
scher@fr.com
12860 El Camino Real, Suite 400
San Diego, CA 92130
Tel: (858) 678-5070
Fax: (858) 678-5099

COUNSEL FOR DEFENDANT,
FEDEX OFFICE AND PRINT SERVICES, INC.

CERTIFICATE OF SERVICE

The undersigned hereby certifies that a true and correct copy of the above and foregoing document has been served on November 19, 2025, via electronic mail, to all counsel of record.

/s/ Warren K. Mabey, Jr.
Warren K. Mabey Jr.