**PUBLIC VERSION**

**UNITED STATES INTERNATIONAL TRADE COMMISSION**

**Washington, D.C.**

| **In the Matter of**<br><br>**CERTAIN ACTIVE MATRIX ORGANIC LIGHT-EMITTING DIODE DISPLAY PANELS AND MODULES FOR MOBILE DEVICES, AND COMPONENTS THEREOF** | **Inv. No. 337-TA-1351** |
|---|---|

# INITIAL DETERMINATION ON VIOLATION OF SECTION 337 AND RECOMMENDED DETERMINATION ON REMEDY AND BOND

Administrative Law Judge Bryan F. Moore

(November 15, 2024)

**Appearances:**

*For Complainant Samsung Display Co., Ltd.*:
Jeffrey H. Lerner; Daniel W. Cho; Jessica C. Hill; Matthew A. Kudzin; Derek J. Andros; Tarek J. Austin; Lucas Moench; Natalie M. Richie; Kee Young Lee; Allyson C. Corigliano of Covington & Burling LLP of Washington, D.C.

Phil A. Irwin and Jesse Chang of Covington & Burling LLP of New York, NY

Scott A. Schrader of Covington & Burling LLP of Republic of Korea

*For Respondents Injured Gadgets, LLC; Phone LCD Parts LLC, and Wholesale Gadget Parts, Inc.*:
Merritt R. Blakeslee of The Blakeslee Law Form of Boothbay Harbor, Maine

*For Respondent Mianyang BOE Optoelectronics Technology Co., Ltd*:
Bas de Blank; Harrison Geron; and Elaine Ke of Orrick, Herrington & Sutcliffe LLP of Menlo Park, CA

Sten Jensen and Steven Routh of Orrick, Herrington & Sutcliffe LLP of Washington, D.C.

Richard F. Martinelli; Wesley White; Tyler Miller; Jordan Fernandes; and Xiang Wang of Orrick, Herrington & Sutcliffe LLP of New York, NY

David R. Medina of Orrick, Herrington & Sutcliffe LLP of Los Angeles, CA

**Samsung Display Co., Ltd.**
**Exhibit 2007**
**Boe v. Samsung**
**IPR2025-01494**

Johannes Hsu of Orrick, Herrington & Sutcliffe LLP of Irvine, CA

*For the Office of Unfair Import Investigations:*

Michael Maas and Jeffrey Hsu of the U.S. International Trade Commission from Washington, D.C.

## Table of Contents


I. Introduction ..... 1
- A. Procedural History ..... 1
- B. The Parties ..... 5
  - 1. Complainant ..... 5
  - 2. Respondents ..... 5
- C. The Products At Issue ..... 8
  - 1. The Accused Products ..... 8
  - 2. Redesigns ..... 11
  - 3. The Domestic Industry Products ..... 17

II. PRELIMINARY ISSUES ..... 18
- A. Statutory Authority ..... 18
- B. Importation ..... 18
- C. Commission Rule 210.12(a)(7) ..... 19

III. Legal Principles ..... 20
- A. Infringement ..... 20
  - 1. Literal Infringement ..... 20
  - 2. Doctrine of Equivalents ..... 21
- B. Invalidity ..... 22
  - 1. 35 U.S.C. § 102 (Anticipation) ..... 22
  - 2. 35 U.S.C. § 103 (Obviousness) ..... 22
  - 3. Written Description ..... 24
  - 4. Enablement ..... 24
  - 5. Indefiniteness ..... 25
- i) Domestic Industry Requirement ..... 25
  - 1. Economic Prong ..... 26
  - 2. Technical Prong ..... 27

IV. U.S. PATENT NO. 9,818,803 ..... 28
- A. Overview ..... 28
  - 1. Asserted Claims ..... 28
  - 2. Claim Construction ..... 30
  - 3. Level of Ordinary Skill in the Art ..... 30

B. Infringement ..... 31
1. Methodology ..... 31
2. [redacted] ..... 40
3. Redesigned Products ..... 57
4. BLF Accused Products ..... 57
5. Defaulting Respondents' Accused Products ..... 58
6. Conclusion ..... 58
C. Technical Prong ..... 59
D. Invalidity ..... 61
1. Phan ..... 61
2. Phan/Yamada ..... 64
3. Matthies/Yamada ..... 65
4. Secondary Considerations ..... 66
V. U.S. PATENT NO. 11,594,578 ..... 66
A. Overview ..... 66
1. Asserted Claims ..... 67
2. Claim Construction ..... 70
3. Level of Ordinary Skill in the Art ..... 71
B. Infringement ..... 71
1. [redacted] ..... 72
2. Redesigned Products ..... 88
3. BLF Accused Products ..... 97
4. Defaulting Respondents' Accused Products ..... 98
5. Conclusion ..... 98
C. Technical Prong ..... 98
D. Invalidity ..... 100
1. Matthies/Yamada ..... 101
2. Matthies/Yamada/Hong ..... 101
3. Secondary Considerations ..... 103
4. Written Description ..... 103
5. Indefiniteness ..... 105
VI. U.S. PATENT NO, 7,414,599 ..... 107
A. Overview ..... 107

1. Asserted Claims ..... 108
2. Claim Construction ..... 110
3. Level of Ordinary Skill in the Art ..... 111

B. Infringement ..... 112
1. BOE Accused Products ..... 114
2. Redesigned Products ..... 127
3. BLF Accused Products ..... 127
4. Defaulting Respondents' Accused Products ..... 128
5. Conclusion ..... 128

C. Technical Prong ..... 129

D. Invalidity ..... 132
1. Kimura ..... 133
2. Kimura/Akimoto ..... 136
3. Sakamoto ..... 137
4. Sakamoto/Akimoto ..... 138
5. Secondary Considerations ..... 140
6. § 112 ..... 140

VII. U.S. PATENT NO. 9,330,593 ..... 141

A. Overview ..... 141
1. Asserted Claims ..... 141
2. Claim Construction ..... 142
3. Level of Ordinary Skill in the Art ..... 143

B. Infringement ..... 144
1. BOE Accused Products ..... 144
2. Redesigned Products ..... 147
3. BLF Accused Products ..... 147
4. Defaulting Respondents' Accused Products ..... 149
5. Conclusion ..... 149

C. Technical Prong ..... 149

D. Invalidity ..... 152
1. Shin/Sasaki ..... 152
2. Secondary Considerations ..... 154
3. Written Description ..... 154

4. Indefiniteness ..... 155

VIII. ECONOMIC PRONG ..... 156

A. Relevant Domestic Industry ..... 157

1. Sold as a Separate Entity or Article of Commerce ..... 160

2. Essential Component of Downstream Product ..... 162

3. Direct Relationship of Exploitation of the Patented Technology ..... 163

4. Conclusion ..... 169

B. SEA ..... 172

C. SDAL ..... 172

1. Qualitative Significance ..... 174

2. Quantitative Significance ..... 175

D. UDC ..... 176

1. Qualifying Investments ..... 178

2. Quantitative Significance ..... 181

E. Conclusion ..... 182

IX. CONCLUSIONS OF LAW ..... 182

X. RECOMMENDED DETERMINATION ON REMEDY AND BOND ..... 184

A. General Exclusion Order ..... 184

1. Circumvention of a Limited Exclusion Order ..... 185

2. Widespread Pattern of Unauthorized Use ..... 187

3. Conclusion ..... 189

B. Limited Exclusion Order ..... 189

1. Limiting LEOs to Replacement Displays ..... 190

2. License ..... 191

C. Cease and Desist Orders ..... 192

1. BLF Respondents ..... 192

2. Defaulting Respondents ..... 193

3. BOE ..... 193

D. Bond ..... 195

E. Public Interest ..... 195

1. Public Health and Welfare ..... 196

2. Competitive Conditions in the United States Economy ..... 197

3. Production of Like or Competitive Articles in the U.S. ..... 197

4. Effect on U.S. Consumers ..... 197
5. Scope and Duration of Remedial Orders ..... 208
XI. INITIAL DETERMINATION ON VIOLATION ..... 209
XII. Order ..... 210

## Table of Abbreviations

The following abbreviations may be used in this Initial Determination:

| | |
|---|---|
| **CDX** | Complainant's demonstrative exhibit |
| **CPX** | Complainant's physical exhibit |
| **CX** | Complainant's exhibit |
| **CIB** | Complainant's initial post-hearing brief |
| **CRB** | Complainant's reply post-hearing brief |
| **CPHB** | Complainant's pre-hearing brief |
| **JX** | Joint Exhibit |
| **RDX** | Respondents' demonstrative exhibit |
| **RPX** | Respondents' physical exhibit |
| **RX** | Respondents' exhibit |
| **RIB** | Respondents' initial post-hearing brief |
| **RRB** | Respondents' reply post-hearing brief |
| **RPHB** | Respondents' pre-hearing brief |
| **SIB** | Staff's initial post-hearing brief |
| **SRB** | Staff's reply post-hearing brief |
| **SPHB** | Staff's pre-hearing brief |
| **Tr.** | Transcript |

**UNITED STATES INTERNATIONAL TRADE COMMISSION**

**Washington, D.C.**

| | |
|---|---|
| **In the Matter of**<br><br>**CERTAIN ACTIVE MATRIX ORGANIC LIGHT-EMITTING DIODE DISPLAY PANELS AND MODULES FOR MOBILE DEVICES, AND COMPONENTS THEREOF** | **Inv. No. 337-TA-1351** |

# INITIAL DETERMINATION ON VIOLATION OF SECTION 337 AND RECOMMENDED DETERMINATION ON REMEDY AND BOND

Administrative Law Judge Bryan F. Moore

(November 15, 2024)

Pursuant to the Notice of Investigation, this is the final initial determination in the matter of *Certain Active Matrix Organic Light-Emitting Diode Display Panels and Modules for Mobile Devices, and Components Thereof,* Investigation No. 337-TA-1351.

For the reasons stated herein, I have determined that there is no violation of section 337 of the Tariff Act of 1930, as amended, in the importation into the United States, the sale for importation, or the sale within the United States after importation of certain active matrix organic light-emitting diode display panels and modules for mobile devices, and components thereof based on infringement of U.S. Patent Nos. 9,818,803, 7,414,599, 9,330,593 and 11,594,578.

# I. INTRODUCTION

## A. Procedural History

On December 28, 2022, Samsung Display Co., Ltd. ("Complainant" or "SDC") filed a complaint alleging violations of section 337 based on the importation, sale for importation, or sale within the United States after importation of certain active matrix organic light-emitting diode display panels and modules for mobile devices, and components that purportedly infringe U.S. Patent Nos. 9,818,803 ("the '803 patent"), 10,854,683 ("the '683 patent"), 7,414,599 ("the '599 patent"), and 9,330,593 ("the '593 patent").[1] 88 Fed. Reg. 7,463 (Feb. 3, 2023); *see* EDIS Doc. ID 789379. A supplement to the complaint was filed on January 17, 2023. *Id.*

The Notice of Investigation named the following parties as respondents: Apt-Ability, LLC d/b/a MobileSentrix; Mobile Defenders, LLC; Injured Gadgets, LLC ("Injured Gadgets"); Group Vertical, LLC ("Group Vertical"); Electronics Universe, Inc. d/b/a Fixez.com and Repairs Universe, Inc. ("Electronics Universe"); LCTech International Inc. d/b/a SEGMobile.com ("LCTech"); Sourcely Plus, LLC ("Sourcely Plus"); eTech Parts Plus, LLC ("eTech Parts Plus"); Parts4Cells Inc. ("Parts4Cells"); Wholesale Gadget Parts, Inc. ("Wholesale Gadget Parts"); Captain Mobile Parts, Inc. ("Capitan Mobile Parts"); DFW Imports LLC d/b/a DFW Cellphone and Parts ("DFW Imports"); Phone LCD Parts LLC and Parts4LCD (collectively, "Phone LCD Parts"); Mengtor Inc. ("Mengtor"); and Gadgetfix Corp ("Gadgetfix").[2] *Id.* at 7,464. The Office of Unfair Import Investigations ("Staff") is also a party to this investigation. *Id*.

---

[1] The investigation was instituted as to the following claims: claims 1-5 and 19-21 of the '803 patent, claims 1, 2, 4-10, and 13 of the '683 patent, claims 1-18 of the '599 patent, and claims 1-3, 6-8, and 14-22 of the '593 patent.

[2] Injured Gadgets, Wholesale Gadget Parts, and Phone LCD Parts are collectively referred to as "the BLF Respondents."

On March 13, 2023, I granted Mianyang BOE Optoelectronics Technology Co., Ltd.'s ("BOE") motion to intervene as a respondent. Order No. 7; *not reviewed*, Comm'n Notice (Mar. 22, 2023).

On March 28, 2023, I granted Complainant's motion to amend the complaint and investigation to add allegations of infringement related to U.S. Patent No. 11,594,578 ("the '578 patent) (collectively with the other patents, "the Asserted Patents").[3] Order No. 8, *not reviewed,* Comm'n Notice (Apr. 20, 2023).

I have also issued a series of initial determinations finding certain respondents in default. Specifically, on May 10, 2023, I issued an Initial Determination finding Respondent Captain Mobile Parts in default. Order No. 16, *not reviewed*, Comm'n Notice (June 7, 2023). On June 27, 2023, I issued an Initial Determination finding Respondents Group Vertical, Sourcely Plus, and Mengtor in default. Order No. 22, *not reviewed*, Comm'n Notice (July 20, 2023). On July 19, 2023, I issued an Initial Determination finding Electronics Universe and LCTech in default. Order No. 25, *not reviewed*, Comm'n Notice (Aug. 18, 2023). Finally, on August 8, 2023, I issued an Initial Determination finding Respondents Parts4Cells, DFW Imports, Gadgetfix, and eTech Parts Plus in default. Order No. 27, *not reviewed*, Comm'n Notice (Aug. 30, 2023). These parties are collectively referred to as the "Defaulting Respondents."

On October 26, 2023, I issued an Initial Determination terminating claims 4, 6, 7, 8, 9, 10, 11, 12, and 14 of the '599 patent, claims 1, 2, 3, and 19 of the '803 patent, claims 1, 4, 6, 7, 9, 10, 12, 13, and 14 of the '683 patent, claims 1, 3, 4, 12, 13, 22, 42, 45, 46, and 51 of the '578 patent,

[3] Specifically, claims 1-6, 10, 12, 17, 19, 21-23, 40-47, and 51-52 of the '578 patent were added to the Investigation.

and claims 2, 3, 5, 14, 15, 16, 17, 18, and 25 of the '593 patent.[4] Order No. 34, *not reviewed*, Comm'n Notice (Nov. 27, 2023).

On December 7, 2023, I issued an Initial Determination terminating additional claims of the asserted patents. Specifically, I terminated claims 1, 5, 17, and 18 of the '599 patent, claims 1, 7, 8, and 19 of the '593 patent, claims 4 and 20 of the '803 patent, claims 3, 8, and 11 of the '683 patent, and claims 2, 6, 14, 19, 21, 23, 44, and 52 of the '578 patent.[5] Order 39, *not reviewed*, Comm'n Notice (Jan. 8, 2024).

On December 20, 2023, I issued an Initial Determination terminating Respondents Apt-Ability LLC d/b/a MobileSentrix and Mobile Defenders, LLC based on a consent order stipulation, proposed consent order, and a binding settlement term sheet. Order No. 43. The Commission affirmed this determination with modifications. Comm'n Notice (April 18, 2024). Specifically, the Commission "determined to remove from the consent order the withdrawn claims" and to "not include in the consent order the claim identified by [Staff] that was not asserted against any of the respondents." *Id.* at 2.

On January 9, 2024, I issued an Initial Determination granting Respondents' motion for summary determination due to lack of standing. Order No. 44. On April 24, 2024, the Commission vacated that determination and remanded the investigation for further proceedings "consistent with this opinion." EDIS Doc. ID 819556. In its opinion, the Commission found that "(1) constitutional

---

[4] Claims 12 and 14 of the '683 patent, claim 13 of the '578 patent, and claims 5 and 25 of the '593 patent were only asserted for domestic industry purposes and not for infringement. Compare Amended Complaint at ¶ 365 (identifying domestic industry claims) with *id.* at ¶ 8 (identifying infringement claims).

[5] Claims 3 and 11 of the '683 patent and claim 14 of the '578 patent were only asserted for domestic industry purposes and not for infringement. Compare Amended Complaint at ¶ 365 (identifying domestic industry claims) with *id.* at ¶ 8 (identifying infringement claims).

standing, the Article III requirements of the Constitution related to the authority of federal courts to adjudicate lawsuits, is not required at [the] Commission; and (2) there are genuine issues of material facts relating to [Complainant's] rights in the asserted patents." EDIS Doc. ID 819557 at 1.

The parties disagreed on the scope of the Commission's remand and the Commission opinion's effect on the investigation. After receiving briefing from the parties on the issue, I explained that "the Commission's opinion confirmed that there are two types of "standing" (constitutional and statutory) but that only one kind is applicable at the Commission." Order No. 50 at 4 (June 11, 2024). I concluded that "[t]he Commission's opinion did not change the law or adopt a new approach with respect to the question of whether a complainant can bring an investigation at the Commission." *Id.* I then found that Respondents waived their argument that Complainant failed to satisfy the requirement of Commission Rule 210.12 because Respondents did not address this issue in their pre-hearing brief, as required by my Ground Rules. *Id.; see also id.* at 5-7.

On June 14, 2024, I issued an Initial Determination terminating claim 20 of the '593 patent and the remaining asserted claims of the '683 patent. Order No. 51, *not reviewed*, Comm'n Notice (July 3, 2024).

Finally, on August 27, 2024, I issued an Initial Determination terminating claims 4, 21, and 22 of the '593 patent and claim 43 of the '578 patent. Order No. 65, *not reviewed*, Comm'n Notice (Sept. 26, 2024).

The evidentiary hearing was held on July 8-9, 2024 and July 15-17, 2024.

## B. The Parties

### 1. Complainant

Complainant Samsung Display Co, Ltd. is a corporation organized and existing under the laws of the Republic of Korea. Complaint at ¶ 12. Complainant designs and manufactures AMOLED displays that are incorporated into Samsung Galaxy S series smartphones. *Id.* at ¶ 14.

### 2. Respondents

#### a) Mianyang BOE

Respondent Mianyang BOE Optoelectronics Technology Co., Ltd. is located in the Sichuan province of China. EDIS Doc. ID 790927 at 3. It "designs, develops, and manufactures AMOLED replacement screens." *Id.*

#### b) Injured Gadgets

Respondent Injured Gadgets, LLC is a company located in Norcross, Georgia. Am. Complaint at ¶ 20; Injured Gadgets' Corrected Response to Am. Complaint at ¶ 20. Injured Gadgets sells replacement parts for mobile phones and tablets, including AMOLED displays. *Id.* at ¶ 21.

#### c) Phone LCD Parts

Phone LCD Parts is a company located in Wayne, New Jersey. Am. Complaint at ¶ 43; Phone LCD Parts' Response to Am. Complaint at ¶ 43. Parts4LCD is a company also located in Wayne, New Jersey. Am. Complaint at ¶ 45; Phone LCD Parts' Response to Am. Complaint at ¶ 45. Parts4LCD is a d/b/a of Phone LCD Parts LLC. Phone LCD Parts' Response to Am. Complaint at ¶ 45. Both Phone LCD Parts and Parts4LCD sell replacement parts for mobile phones and tablets, including AMOLED displays. Am. Complaint.at ¶¶ 44, 46.

**d) Wholesale Gadget Parts**

Wholesale Gadget Parts, Inc. is a company located in Bixby, OK. Am. Complaint at ¶ 37; Wholesale Gadgets Response to Am. Complaint at ¶ 37. Wholesale Gadget Parts sells replacement parts for mobile phones and tablets, including AMOLED displays. Complaint at ¶ 38.

**e) Group Vertical**

Group Vertical, LLC is a company located in Grand Rapids, Michigan. Complaint at ¶ 22. Group Vertical sells replacement parts for mobile phones and tablets, including AMOLED displays. *Id.* at ¶ 23.

**f) Electronics Universe**

Electronics Universe Inc, d/b/a Fixez.com and Repairs Universe, Inc. is a company located in Las Vegas, Nevada. Am. Complaint at ¶¶ 24, 26. Electronics Universe does business under the names Repairs Universe and Fixez.com. Electronics Universe's Response to Am. Complaint at ¶¶ 24, 27. Both Repairs Universe and Fixez.com sells replacement parts for mobile phones and tablets, including AMOLED displays. *Id.*

**g) LCTech**

LCTech International Inc. (d/b/a/ SEGMobile.com) is a company located in City of Industry, CA. LCTech's Am. Complaint at ¶ 29. LCTech does business as SEGMobile.com. *Id.* LCTech sells replacement parts for mobile phones and tablets, including AMOLED displays. *Id.* at ¶ 30.

**h) Sourcely Plus**

Sourcely Plus, LLC is a company located in Tempe, Arizona. Complaint at ¶ 31. Sourcely Plus sells replacement parts for mobile phones and tablets, including AMOLED displays. *Id.* at ¶ 32.

**i) eTech Parts Plus**

eTech Parts Plus, LLC is a company located in Southlake, Texas. Am. Complaint at ¶ 34; Response to Am. Complaint at ¶ 34. eTech Parts Plus sells replacement parts for mobile phones and tablets, including AMOLED displays. *Id.* at ¶ 34.

**j) Parts4Cells**

Parts4Cells, Inc. is a company located in Houston, Texas. Am. Complaint at ¶ 35; Parts4Cells' Response to Am. Complaint at ¶ 35. Parts4Cells sells replacement parts for mobile phones and tablets, including AMOLED displays. Am. Complaint at ¶ 36.

**k) Captain Mobile Parts**

Captain Mobile Parts, Inc. is a company located in Bixby, OK. Complaint at ¶ 39. Captain Mobile Parts sells replacement parts for mobile phones and tablets, including AMOLED displays. *Id.* at ¶ 40.

**l) DFW Imports**

DFW Cellphone & Parts is a company located in Dallas, Texas. Am. Complaint at ¶ 41. DFW Cellphone & Parts is a fictitious name set up by DFW Imports LLC ("DFW Imports") located in Fork Bend, Texas. *Id.*; DFW Imports' Response to Am. Complaint at ¶ 41. DFW Cellphone & Parts sells replacement parts for mobile phones and tablets, including AMOLED displays. *Id.*

**m) Mengtor**

Mengtor Inc. is a company with offices located in El Monte, CA and Walnut, CA. Complaint at ¶ 47. Mengtor sells replacement parts for mobile phones and tablets, including AMOLED displays. *Id.* at ¶ 48.

#### n) Gadgetfix Corp.

Gadgetfix Corp. is a company located in Irvine, CA. Am. Complaint at ¶ 49; Gadgetfix's Response to Am. Complaint at ¶ 49. Gadgetfix sells replacement parts for mobile phones and tablets, including AMOLED displays. *Id.* at ¶ 49.

### C. The Products At Issue

The products at issue are "active matrix organic light-emitting diode ('AMOLED') display panels and modules used as replacement displays for mobile devices comprising organic pixel elements for presenting information to a viewer which infringe one or more claims of the Asserted Patents, and components thereof, where AMOLED display modules refers to the assembly of an AMOLED display panel (containing light-emitting materials, pixel circuitry, and encapsulation layers on a substrate) with additional components such as a connector cable, one or more polarizing layers, window glass, and/or housing materials around the AMOLED display panel." 88 Fed. Reg. at 7,463; *see also* 19 C.F.R. § 210.10(b)(1).

#### 1. The Accused Products

Complainant accuses the following products of infringement:

| Respondent | Accused Product | Sample No. |
|---|---|---|
| Mianyang BOE Optoelectronic Technology Co., Ltd. | [redacted] | BOE-PS-0009 |
| | [redacted] | BOE-PS-0013 |
| | [redacted] | BOE-PS-0005 |
| | [redacted] | BOE-PS-0017 |
| | [redacted] | BOE-PS-0029 |
| | [redacted] | BOE-PS-0033 |
| | [redacted] | [redacted] |

| Respondent | Accused Product | Sample No. |
|---|---|---|
| | [redacted] | [redacted] |
| | [redacted] | BOE-PS-0025 |
| | [redacted] | BOE-PS-0021 |
| | [redacted] | BOE-PS-0002 |
| Injured Gadgets, LLC | FX5 Hard OLED - Aftermarket OLED Screen Assembly for iPhone 12 / 12 Pro (Black), IP12-AS-FX5 | IG-IP12-AS-FX5-2 |
| | FX5 Hard OLED - Aftermarket OLED Screen Assembly for iPhone X (Black), IPX-AS-FX5-B | IG-IPX-AS-FX5-2 |
| | FX5 Hard OLED - Aftermarket OLED Screen Assembly for iPhone 11 Pro Max (Black), IP11PM-AS-FX5 | IG-IP11PM-AS-FX5-2 |
| | FX5 Hard OLED - Aftermarket OLED Screen Assembly for iPhone XS Max (Black), IPXSM-AS-FX5 | IG-IPXSM-AS-FX5-2 |
| | FX5 Hard OLED - Aftermarket OLED Screen Assembly for iPhone XS (Black), IPXS-AS-FX5 | IG-IPXS-AS-FX5-2 |
| Wholesale Gadget Parts, Inc. | OLED & Frame Assembly for Apple iPhone 12 & 12 Pro (Hard Evolve), AP04508 | WGP-AP04508-2 |
| | OLED & Frame Assembly for Apple iPhone 12 Pro Max (Hard Evolve), AP04509 | WGP-AP04509-2 |
| | OLED & Frame Assembly for Apple iPhone X (Hard Evolve), AP03118 | WGP-AP03118-2 |

| Respondent | Accused Product | Sample No. |
|---|---|---|
| | OLED & Frame Assembly for Apple iPhone XS Max (Hard Evolve), AP03641 | WGP-AP03641-2 |
| | OLED & Frame Assembly for Apple iPhone 11 Pro Max (Hard Evolve), AP04253 | WGP-AP04253-2 |
| Phone LCD Parts LLC, (d/b/a Parts4LCD) | iPhone X OLED Assembly (HARD / QV8) (Exclusive Oled Breakage Warranty), IPX-QV8-HRD | PLP-IPX-QV8-HRD-1 |
| | iPhone 11 Pro Max OLED Assembly (HARD / QV8) (Exclusive Oled Breakage Warranty), 11M-QV8-HRD | PLP-11M-QV8-HRD-1 |
| | iPhone 12 Pro / 12 OLED Assembly (HARD / QV8), 12P-QV8-HRD | PLP-12P-QV8-HRD-1 |
| DFW Imports, LLC (d/b/a/ DFW Cellphone and Parts | LCD IP 11 PROMAX HARD OLED MP+ | DFW-00369382-1 |
| Electronics Universe, Inc. d/b/a Fixez.com and Repairs Universe, LLC | VividFX Premium iPhone XS Max Hard OLED Display Assembly, 2-AP-6183 | FXZ-2-AP-6183-2 |
| eTech Parts Plus, LLC | Platinum Aftermarket Soft OLED Screen Assembly for use with iPhone 11 Pro (Black), 822-11573 | ETP-822-11573-1 |
| Gadgetfix Corp. | Supreme FHD Hard OLED Display Touch Digitizer Screen for iPhone XS Max, iXS-Max-Assy (Hard) | GF-iXS-Max-Assy-Hard-1 |
| Parts4Cells, Inc. | Brilliance Pro iPhone XS Max LCD With Touch HARD OLED Black, 302629 | P4C-302629-2 |

| Respondent | Accused Product | Sample No. |
|---|---|---|
| LCTech International Inc. (d/b/a SEGMobile) | (MP+) Hard OLED Assembly for iPhone XS Max - Black, 0101898200 | SM-0101898200-2 |
| Captain Mobile Parts, Inc. | Brilliance Po Phone 12 / 12 Pro | 304212 |
| Group Vertical, LLC | Touch Screen Digitizer and OLED for Apple iPhone 12 2020 – Hard OLED | PAI-12018 |
| Mengtor Inc. | OLED Screen Digitizer Assembly With Frame for iPhone 12 / 12 Pro (High Quality) – Black | PH-LCD-IP-001063BKA |
| Sourcely Plus, LLC | iPhone 12 / 12 Pro – Soft OLED | PH12P-XX032 |

Corrected Joint Statement Identifying Accused Products (EDIS Doc. ID 805209). The Accused Products from BOE are collectively referred to as "the BOE Accused Products." The Accused Products from Injured Gadget, Wholesale Gadget Parts, and Phone LCD Parts are collectively referred to as "the BLF Accused Products." The Accused Products from the Defaulting Respondents are collectively referred to as the "Defaulting Respondents' Accused Products."

**2. Redesigns**

BOE has presented [redacted] non-infringing alternative products (hereinafter, referred to as NIAs [redacted]. RIB at 2; EDIS Doc ID 805209. NIAs [redacted] are redesigns of the pixel circuit, NIAS [redacted] are redesigns of the GOA circuit, and NIAs [redacted] are redesigns of the pixel arrangements. RX-0001C (Wei) at Q/A 10, 16, 22. Complainant accuses NIAs [redacted] of infringing claim 47 of the '578 patent but does not accuse the remaining redesigns of infringement. *See, e.g.*, CIB at 8.

The Commission's test for determining whether a respondent has met its burden for adjudication of a redesigned or alternative product includes four factors: (1) whether the product is within the scope of the investigation; (2) whether it has been imported; (3) whether it is

sufficiently fixed in design; and (4) whether it has been sufficiently disclosed by the respondent during discovery. *Certain Human Milk Oligosaccharides & Methods of Producing the Same*, Inv. No. 337-TA-1120, Comm'n Op. at 18 (June 8, 2020) ("*Oligosaccharides*"). Additionally, the Commission has a "policy in favor of adjudicating redesigns to prevent subsequent and potentially burdensome proceedings that could have been resolved in the first instance in the original Commission investigation." *Id.*

Complainant argues that the redesigns should not be adjudicated. CIB at 5. Complainant first asserts that the redesigns are not fixed in design. *Id.* at 6. According to Complainant, "[a]ttempting to implement NIA[redacted] in mobile device displays would require numerous further design choices and modifications affecting the circuits and pixel structures . . . all dependent on customer input." *Id.* Next, Complainant asserts that the redesigns were not sufficiently disclosed and notes that the samples provided by BOE were inadequate. *Id.* at 6-7. Finally, Complainant asserts that the redesigns "are outside this Investigation's scope, as they are not AMOLED 'display panel and modules used as replacement displays for mobile devices,' nor 'components thereof' as set forth in the NOI." *Id.* at 7.

BOE explains that it "disclosed [NIA[redacted]] during discovery, explained why they do not infringe, produced redesigned GDS files, Design Rule documents, and lighting demonstrations and test results describing each redesign, imported samples embodying each redesign for SDC to evaluate, and provided fact and expert testimony." RIB at 1. BOE also notes Complainant was able to evaluate the redesigns for infringement and that this ability "proves the NIAs should be adjudicated." *Id.* at 2.

Staff also believes that "the Redesigns are ripe for adjudication." SIB at 13. Staff argues that the redesigns are within the scope of the investigation because "[t]he evidence shows that the

Redesigns can be used in AMOLED displays for mobile devices." *Id.* at 14. Staff notes that "a prototype of each redesign has been imported into the U.S." *Id.* Staff further asserts that the redesigns are fixed in design as "there is evidence that they could be implemented in . . . displays without material changes." *Id.* Finally, Staff contends that "the Redesigns were timely disclosed" and notes that Complainant "never sought to compel additional discovery related to the Redesigns." *Id.* at 15.

For the reasons set forth below, I find that the Redesigned Products should be adjudicated in this Investigation, First, I note that it is undisputed that the second factor weighs in favor of adjudicating the redesigns. CIB at 6-7; RIB at 3; SIB at 14.

I further find that the first factor weighs in favor of adjudicating the redesigns. Complainant argues that the redesigned products do not meet the scope of the investigation as defined in the Notice of Institution ("NOI"). CIB at 7. The NOI defines the scope of the investigation as "active matrix organic light-emitting diode ('AMOLED') display panels and modules used as replacement displays for mobile devices comprising organic pixel elements for presenting information to a viewer which infringe one or more claims of the Asserted Patents, and components thereof, where AMOLED display modules refers to the assembly of an AMOLED display panel (containing light-emitting materials, pixel circuitry, and encapsulation layers on a substrate) with additional components such as a connector cable, one or more polarizing layers, window glass, and/or housing materials around the AMOLED display panel." 88 Fed. Reg. at 7,463. Respondents do not dispute that the redesigns are not "display panels and modules." *See, e.g.*, RX-0004C (Pattison) at Q/A 501 (noting that NIAs [redacted] are "modified pixel arrangements themselves, and not complete mobile device displays or panels"). As Respondents note, however, the NIAs "are replacements for the features accused of infringement." RIB at 2. Specifically, "NIA[redacted] can

replace the Accused Products' pixel circuit, NIA[redacted] can replace the Accused Products' GOA circuit, and NIA[redacted] can replace the accused pixel layout." *Id*. To find that the redesigns cannot be adjudicated because they relate to features within a display module (rather than the whole module) would be to elevate form over substance. Given that the Commission has a policy in favor of adjudicating redesigns, I decline to find that this factor weighs against adjudication.

Nor am I persuaded by Complainant's additional arguments with respect to NIAs [redacted] As to these redesigns, Complainant asserts that they "are designed to 'be integrated in [an] in-car product . . . which are not 'mobile device[s].'" CIB at 7 (quoting CX-1612C at 89:4-90:16). The testimony cited by Complainant does not support the conclusion that these redesigns cannot be used in mobile devices. While Mr. Liheng Wei (who works in circuits development for Chengdu BOE, an affiliate of BOE) testified that [redacted]" he also specifically stated that [redacted]." CX-1612 (Wei) at 89:4-90:16.

I next find that the third factor weighs in favor of adjudication. Complainant argues that the redesigns are "not complete mobile device displays or panels" and "instead are merely isolated pixel circuits (NIA [redacted]), stage circuits (NIA[redacted]), or pixel arrangements (NIA [redacted].)" CIB at 6. According to Complainant, these "'one-off engineering experiences' are not 'fixed in design' because adjudicable redesigns 'must be used with' completed products." *Id.* (quoting *Certain Unmanned Aerial Vehicles & Components Thereof*, Inv. No. 337-TA-1133, Comm'n Op., 2020 WL 5407477, at *13-14 (Sept. 8, 2020)). According to Complainant, implementing "NIA[redacted] in mobile device displays would require numerous further design choices and modifications affecting the circuits and pixel structures . . . all dependent on customer input." *Id.*

The evidence demonstrates otherwise. Mr. Wei testified:

[redacted]

RX-0001C (Wei) at Q/A 9. Mr. Wei clarified that [redacted] for any of the redesigns and that [redacted] *Id.* at Q/As 14 (NIAs [redacted], 20 (NIAs [redacted], 26 (NIAs [redacted]. Given that the redesigns could be implemented in displays without material changes, I find that this factor weighs in favor of adjudication. *See Certain Mobile Devices with Multifunction Emulators*, Inv. No. 337-TA-1170, Initial Determination at 10-16 (March 16, 2021) ("*Mobile Devices with Multifunction Emulators*") (finding that the redesign was "sufficiently fixed in design" even though the design did "not seem to be commercially feasible" and the respondent had not completed "testing necessary to be released to the market"); *not reviewed in relevant part*, Comm'n Notice at 3-4 (May 17, 2021); *see also Certain Video Sec. Equip. & Sys*, Inv. No. 337-TA-1281, Initial Determination, at 22 (Oct. 24, 2022) (indicating that the fact "a change could be made in the future . . . is not sufficient for a finding that a redesign cannot be adjudicated" and noting that the Commission used the word "sufficiently" and not "completely"); *not reviewed in relevant parti*, Comm'n Notice at 3 (Jan. 12, 2023).

Finally, I find that the fourth factor weighs in favor of adjudication. BOE notes that it "described the NIAs in its discovery responses, created and produced GDS files and Design Review documents describing and implementing each redesign, embodied them in physical

devices, addressed them in its expert reports, and provided fact and expert depositions answering questions about the redesigns." RIB at 3 (citing RX-0001C (Wei) at Q/A 10-27). Complainant does not dispute this, but alleges that there were several deficiencies with the samples implementing the redesigns such as: (1) "[redacted]" and the demonstration "[redacted]"; (2) the samples lacked "[redacted]"; (3) the samples for NIAs [redacted] "[redacted]"; (4) the sample for NIA [redacted] "[redacted]"; and (5) "NIA [redacted] 's sample [redacted]."[6] *Id.* at 7. I do not find any of these arguments persuasive.

First, the fact that the equipment used to demonstrate the redesigns had issues with functionality does not mean that the redesigned themselves were not sufficiently disclosed. If Complainant was unable to obtain the information it needed to assess infringement, it could have – and should have – sought my assistance through a discovery case management conference.[7] I further note that Complainant was able to assess the redesigns for infringement, thus indicating that the discovery was sufficient. *Oligosaccharides*, at 20 n. 22 (explaining that discovery of a redesign is sufficient if it allows the "complainant to assess the features relevant to the asserted patent claims").

With respect to [redacted], I note that these features are not claimed in the Asserted Patents. Thus, it is not relevant to the analysis as to whether the display modules demonstrating the redesigns had these features. As for Complainant's

---

[6] Complainant briefs the third and fourth factors together and thus some of these arguments are more applicable to the third factor. *See* CIB at 6-7.

[7] This includes Complainant's grievances with respect to the sample for NIA [redacted]. BOE opted to demonstrate this redesign via video. *See* RPX-0173C.

arguments about NIAs [redacted], the Commission does not require that a redesign have customers in order for it to be adjudicated. *See, e.g.*, *Mobile Devices with Multifunction Emulators*, Initial Determination at 10-16. Accordingly, I find that the redesigns were sufficiently disclosed.

For these reasons, I find that the Redesigned Products should be adjudicated in this Investigation.

### 3. The Domestic Industry Products

Complainant asserts that two categories of products satisfy the domestic industry: AMOLED DI Products and Galaxy DI Products. The AMOLED DI Products including the following:

[redacted]

CIB at iv. The Galaxy DI Products include:

> Galaxy S20, Galaxy S20+, Galaxy S20 Ultra, Galaxy S20 FE, Galaxy S21, Galaxy S21+, Galaxy S21 Ultra, Galaxy S21 FE, Galaxy S22, Galaxy S22+, Galaxy S22 Ultra, Galaxy S23, Galaxy S23+, Galaxy S23 Ultra, Galaxy Z Fold 2, Galaxy Z Fold 3, Galaxy Z Fold 4, Galaxy Z Flip 3, Galaxy Z Flip 4.

*Id.* at v.[8]

## II. PRELIMINARY ISSUES

### A. Statutory Authority

To "establish[] the Commission's authority to investigate an alleged violation under section 337(a)(1)(B), a complainant must allege that a violation of section 337 has occurred, *i.e.*, that a respondent imported, sold for importation, or sold after importation an article that infringes a claim of a U.S. patent and that a domestic industry exists or is in the process of being established, among other statutory requirements." *Certain Liquid Transfer Devices with an Integral Vial Adapter,* Inv. No. 337-TA-1362, Comm'n Op. at 9 (July 26, 2024) ("*Liquid Transfer*"). In its Amended Complaint, Complainant alleged that all of the respondents except BOE violated Section 337. *See* Am. Compl. The Commission instituted the investigation and has thus determined that it has "statutory authority to investigate the alleged violation under section 337(a)(1)(B)." *Liquid Transfer* at 9 ("The Commission assures itself at institution that the complaint sufficiently states an alleged violation of Section 337"). With respect to BOE, the Commission determined that it had authority to investigate the allegations by allowing BOE to intervene as a respondent. Comm'n Notice (Mar. 22, 2023).

### B. Importation

The statute defines a violation of section 337 as "[t]he importation into the United States, the sale for importation, or the sale within the United States after importation by the owner, importer, or consignee, of articles that . . . infringe a valid and enforceable United State patent."

[8] The parties submitted a chart indicating which Galaxy DI Products correspond to which AMOLED DI Products. *See* Joint Stipulation Regarding Representative Products (EDIS Doc. ID 808453) (hereinafter, "Representative Products Stipulation"). This chart also identifies representative products for each of the Asserted Patents. *Id.*

19 U.S.C. § 1337(a)(1)(B). Accordingly, "[t]o prevail under section 337, a complainant must prove that a respondent actually imported or sold for [or after] importation the articles at issue." *Certain Carbon and Alloy Steel Products*, Inv. No. 337-TA-1002, Order No. 103 at 33, *not reviewed*, Comm'n Notice, (Nov. 1, 2017).

The record demonstrates that the accused products have been imported into the United States, sold for importation, and/or sold within the United States after importation. *See, e.g.*, *Certain Road Milling Machines and Components Thereof*, Inv. No. 337-TA-1067, Order No. 23 at 14 (Feb. 15, 2018) ("an importation of even one accused product can satisfy the importation requirement of section 337"). Respondents stated that they "do not dispute the importation requirement" and submitted stipulations with respect to importation. RIB at 1; EDIS ID 807220 ¶¶ 2, 3, 5; EDIS Doc. ID 803421 ¶¶ 3-6; EDIS Doc ID 803422 ¶¶ 3-6; EDIS Doc. ID 803423 at ¶¶3-6. Thus, the importation requirement is met.

**C. Commission Rule 210.12(a)(7)**

Commission Rule 210.12(a)(7) requires that "at least one complainant is the owner or exclusive licensee of the subject intellectual property." 19 C.F.R. § 210.12(a)(7). Complainant asserts that "Rule 210.12(a)(7) is satisfied because SDC owns and is the patentee of all Asserted Patents." CIB at 4.

Respondents do not dispute that the Asserted Patents are assigned to Complainant. *See* RIB at 1.[9]

The evidence shows that each of the Asserted Patents has been assigned to Complainant.

[9] BOE has other arguments as to why Complainant does not satisfy Rule 210.12(a)(7) but, as noted above, I found that BOE waived these arguments by failing to include them in its pre-hearing brief.

JX-0002 ('593 patent indicating that it is assigned to Complainant); JX-0003 ('803 patent indicating that it is assigned to Complainant); JX-0005 ('578 patent indicating that it is assigned to Complainant); JX-0001 ('599 patent indicating that it is assigned to Samsung SDI Co., Ltd.); JX-0013 (assigning patents from Samsung SDI Co., Ltd. to Samsung Mobile Display Co., Ltd.); JX-0012 (assigning patents from Samsung Mobile Display Co., Ltd. to Samsung Display Co., Ltd.); *see also* JX-0011; JX-0014; JX-0015; JX-0017 (assignments of the patents); CX-1635C (Kim) at Q/A 42-51, 57. Yongseog Kim, a member of Complainant's IP Legal & Strategy Team confirmed that Complainant holds legal title to each of the patents and is the sole owner. CX-1635C (Kim) at Q/A 49-50. As such, I find that Commission Rule 210.12(a)(7) is satisfied.

## III. LEGAL PRINCIPLES

### A. Infringement

In a section 337 investigation, the complainant bears the burden of proving infringement of the asserted patent claims by a preponderance of the evidence. *Spansion, Inc. v. Int'l Trade Comm'n*, 629 F.3d 1331, 1349 (Fed. Cir. 2010). This standard "requires proving that infringement was more likely than not to have occurred." *Warner-Lambert Co. v. Teva Pharm. USA, Inc.*, 418 F.3d 1326, 1341 n.15 (Fed. Cir. 2005).

#### 1. Literal Infringement

Literal infringement is a question of fact. *Finisar Corp. v. DirecTV Grp., Inc.*, 523 F.3d 1323, 1332 (Fed. Cir. 2008). Literal infringement requires the patentee to prove that the accused device contains each limitation of the asserted claim(s). If any claim limitation is absent, there is no literal infringement of that claim as a matter of law. *Bayer AG v. Elan Pharm. Research Corp.*, 212 F.3d 1241, 1247 (Fed. Cir. 2000).

### 2. Doctrine of Equivalents

"[A] product or process that does not literally infringe upon the express terms of a patent claim may nonetheless be found to infringe if there is 'equivalence' between the elements of the accused product or process and the claimed elements of the patented invention." *Warner-Jenkinson Co. v. Hilton Davis Chemical Co.*, 520 U.S. 17, 21 (1997). "[T]he proper time for evaluating equivalency . . . is at the time of infringement, not at the time the patent issued." *Id*. at 37.

"The 'essential inquiry' in determining whether there has been infringement under this doctrine is whether 'the accused product or process contains elements identical or equivalent to each claimed element of the patented invention.'" *Am. Calcar, Inc. v. Am. Honda Motor Co.*, 651 F.3d 1318, 1338 (Fed. Cir. 2011) (quoting *Warner–Jenkinson,* 520 U.S. at 40). An element in the accused device is equivalent to a claim limitation if the only differences between the two are insubstantial to one of ordinary skill in the art. *Wavetronix LLC v. EIS Elec. Integrated Sys.*, 573 F.3d 1343, 1360 (Fed. Cir. 2009); *AquaTex Indus. v. Techniche Sols.*, 419 F.3d 1374, 1382 (Fed. Cir. 2005). In order to assess insubstantiality, a court considers whether an element of the accused product "performs substantially the same function in substantially the same way to obtain the same result" as the patented invention. *Am. Calcar,* 651 F.3d at 1338; *see also Voda v. Cordis Corp.*, 536 F.3d 1311, 1326 (Fed. Cir. 2008). A patentee alleging infringement under the doctrine of equivalents must submit particularized evidence as to equivalence and must explain specifically why the difference between the claimed invention and what the accused product actually does is "insubstantial." *Am. Calcar*, 651 F.3d at 1338.

Prosecution history estoppel can prevent a patentee from relying on the doctrine of equivalents when the patentee relinquished subject matter during prosecution of the patent, either by amendment or argument. *AquaTex*, 419 F.3d at 1382. In particular, "[t]he doctrine of

prosecution history estoppel limits the doctrine of equivalents when an applicant makes a narrowing amendment for purposes of patentability, or clearly and unmistakably surrenders subject matter by arguments made to an examiner." *Id*.

### B. Invalidity

A patent is presumed valid. *See* 35 U.S.C. § 282; *Microsoft Corp. v. i4i Ltd. P'ship*, 564 U.S. 91, 95 (2011). A respondent who has raised patent invalidity as an affirmative defense has the burden of overcoming this presumption by clear and convincing evidence. *See Microsoft,* 564 U.S. at 95.

#### 1. 35 U.S.C. § 102 (Anticipation)

Under 35 U.S.C. § 102, a claim is anticipated and therefore invalid when "the four corners of a single, prior art document describe every element of the claimed invention, either expressly or inherently, such that a person of ordinary skill in the art could practice the invention without undue experimentation." *Advanced Display Sys., Inc. v. Kent State Univ.*, 212 F.3d 1272, 1282 (Fed. Cir. 2000), cert. denied, 532 U.S. 904 (2001). To be considered anticipatory, the prior art reference must be enabling and describe the applicant's claimed invention sufficiently to have placed it in possession of a person of ordinary skill in the field of the invention. *Helifix Ltd. v. Blok-Lok, Ltd.*, 208 F.3d 1339, 1346 (Fed. Cir. 2000).

#### 2. 35 U.S.C. § 103 (Obviousness)

Under 35 U.S.C. §103, a patent may be found invalid for obviousness if "the differences between the claimed invention and the prior art are such that the claimed invention as a whole would have been obvious before the effective filing date of the claimed invention to a person having ordinary skill in the art to which the claimed invention pertains." 35 U.S.C. §103. Because obviousness is determined at the time of invention, rather than the date of application or litigation,

"[t]he great challenge of the obviousness judgment is proceeding without any hint of hindsight." *Star Scientific, Inc. v. R.J. Reynolds Tobacco Co*., 655 F.3d 1364, 1375 (Fed. Cir. 2011) ("*Star II*").

When a patent is challenged as obvious, the critical inquiry in determining the differences between the claimed invention and the prior art is whether there is an apparent reason to combine the known elements in the fashion claimed by the patent at issue. *KSR Int'l Co. v. Teleflex, Inc*., 550 U.S. 398, 417-418 (2007). The Federal Circuit has since held that when a patent is challenged as obvious, based on a combination of several prior art references, "the burden falls on the patent challenger to show by clear and convincing evidence that a person of ordinary skill in the art would have had reason to attempt to make the composition or device, or carry out the claimed process, and would have had a reasonable expectation of success in doing so." *PharmaStem Therapeutics, Inc. v. ViaCell, Inc.*, 491 F.3d 1342, 1360 (Fed. Cir. 2007) (citations omitted).

Obviousness is a determination of law based on underlying determinations of fact. *Star II*, 655 F.3d at 1374. The factual determinations behind a finding of obviousness include: (1) the scope and content of the prior art, (2) the level of ordinary skill in the art, (3) the differences between the claimed invention and the prior art, and (4) secondary considerations of non-obviousness. *KSR,* 550 U.S. at 399 (citing *Graham v. John Deere Co*., 383 U.S. 1, 17 (1966)). These factual determinations are referred to collectively as the "*Graham* factors." Secondary considerations of non-obviousness include commercial success, long felt but unresolved need, and the failure of others. *Id.* When present, secondary considerations "give light to the circumstances surrounding the origin of the subject matter sought to be patented," but they are not dispositive on the issue of obviousness. *Geo. M. Martin Co. v. Alliance Mach. Sys. Int'l.*, 618 F.3d 1294, 1304-06 (Fed. Cir. 2010). A court must consider all the evidence from the *Graham* factors before

reaching a decision on obviousness. For evidence of secondary considerations to be given substantial weight in the obviousness determination, its proponent must establish a nexus between the evidence and the merits of the claimed invention. *W. Union Co. v. MoneyGram Payment Sys. Inc.*, 626 F.3d 1361, 1372-73 (Fed. Cir. 2010) (citing *In re GPAC Inc.,* 57 F.3d 1573, 1580 (Fed. Cir. 1995)).

**3. Written Description**

The specification must provide a written description of the claimed invention that "reasonably conveys to those skilled in the art that the inventor had possession of the claimed subject matter as of the filing date." *Ariad Pharms., Inc. v. Eli Lilly & Co.*, 598 F.3d 1336, 1351 (Fed. Cir. 2010) (*en banc*). Determining whether the written description requirement has been satisfied "requires an objective inquiry into the four corners of the specification from the perspective of a person of ordinary skill in the art[]" to determine whether the specification "show[s] that the inventor actually invented the invention claimed." *Id.* Compliance with the written description requirement is a question of fact and "the level of detail required to satisfy the written description requirement varies depending on the nature and scope of the claims and on the complexity and predictability of the relevant technology." *Id.*

**4. Enablement**

The enablement requirement necessitates that the patentee disclose "the manner and process of making and using [the invention], in such full, clear, concise, and exact terms as to enable any person skilled in the art to which it pertains, or with which it is most nearly connected, to make and use the same . . .." pre-AIA 35 U.S.C. § 112, ¶ 1. The requirement "is met when at the time of filing the application one skilled in the art, having read the specification, could practice the invention without 'undue experimentation.'" *Cephalon, Inc. v. Watson Pharms., Inc.*, 707 F.3d

1330, 1336 (Fed. Cir. 2013) (quoting *In re Wands*, 858 F.2d 731, 736-37 (Fed. Cir. 1988)). Thus, the relevant inquiry is "whether, with [the patentee's] patent specification as an initial guide, the hypothetical skilled artisan's knowledge of the surrounding art and ability to modestly experiment would have been sufficient to enable him to make and use [the claimed invention]." *AK Steel Corp. v. Sollac and Ugine*, 344 F.3d 1234, 1244 (Fed. Cir. 2003). Enablement is a question of law based on underlying factual findings and must be shown by clear and convincing evidence. *MagSil Corp. v. Hitachi Global Storage Techs., Inc.*, 687 F.3d 1377, 1380 (Fed. Cir. 2012).

**5. Indefiniteness**

A claim must be definite. Pursuant to 35 U.S.C. § 112: "The specification shall conclude with one or more claims particularly pointing out and distinctly claiming the subject matter which the applicant regards as his invention." 35 U.S.C. § 112, ¶ 2. In *Nautilus, Inc. v. Biosig Instruments, Inc.*, 134 S. Ct. 2120 (2014), the Supreme Court held that § 112, ¶ 2 requires "that a patent's claims, viewed in light of the specification and prosecution history inform those skilled in the art about the scope of the invention with reasonable certainty." (*Id.* at 2129.) A claim is required to "provide objective boundaries for those of skill in the art," and a claim term is indefinite if it "might mean several different things and no informed and confident choice is among the contending definitions." *Interval Licensing LLC v. AOL, Inc.*, 766 F.3d 1364, 1371 (Fed. Cir. 2014). A patent claim that is indefinite is invalid. 35 U.S.C. § 282(b)(3)(A).

**i) Domestic Industry Requirement**

For a patent-based complaint, a violation of section 337 can be found "only if an industry in the United States, relating to the articles protected by the patent . . . concerned, exists or is in the process of being established." 19 U.S.C. § 1337(a)(2). This domestic industry requirement of section 337 is often described as having an economic prong and a technical prong. *InterDigital*

*Commc'ns, LLC v. Int'l Trade Comm'n*, 707 F.3d 1295, 1298 (Fed. Cir. 2013); *Certain Stringed Musical Instruments & Components Thereof*, Inv. No. 337-TA-586, USITC Pub. 4120, 2009 WL 5134139 (Dec. 2009), Comm'n Op. at 12-14. The complainant bears the burden of establishing that the domestic industry requirement is satisfied. *See Certain Set-Top Boxes & Components Thereof*, Inv. No. 337-TA-454, ID at 294, 2002 WL 31556392 (June 21, 2002) (unreviewed by Commission in relevant part).

**1. Economic Prong**

Section 337(a)(3) sets forth the following economic criteria for determining the existence of a domestic industry in such investigations:

> (3) For purposes of paragraph (2), an industry in the United States shall be considered to exist if there is in the United States, with respect to the articles protected by the patent, copyright, trademark, mask work, or design concerned –
>
> (A) significant investment in plant and equipment;
> (B) significant employment of labor or capital; or
> (C) substantial investment in its exploitation, including engineering, research and development, or licensing.

19 U.S.C. § 1337(a)(3). Thus, section 337(a)(3) requires that investments be either "significant" or "substantial." The Federal Circuit has clarified that a quantitative analysis must be performed in order to make this determination. *Lelo Inc. v. Int'l Trade Comm'n*, 786 F.3d 879, 883 (Fed. Cir. 2015) ("The plain text of § 337 requires a quantitative analysis in determining whether a [complainant] has demonstrated a 'significant investment in plant and equipment' or 'significant employment of labor or capital.'"). There is no threshold amount that a complainant must meet. *See Certain Stringed Musical Instruments & Components Thereof*, Inv. No. 337-TA-586, Comm'n Op. at 25-26 (May 16, 2008) ("We emphasize that there is no minimum monetary expenditure that a complainant must demonstrate to qualify as a domestic industry under the 'substantial

investment' requirement of this section."); *Certain Male Prophylactic Devices*, Inv. No. 337-TA-546, Comm'n Op. at 39 (Aug. 1, 2007) ("*Male Prophylactic Devices*") ("[T]here is no mathematical threshold test."). Rather, the inquiry depends on "the facts in each investigation, the article of commerce, and the realities of the marketplace." *Certain Printing & Imaging Devices & Components Thereof*, Inv. No. 337-TA-690, Comm'n Op. at 27 (Feb. 17, 2011). As such, "[t]he determination takes into account the nature of the investment and/or employment activities, the industry in question, and the complainant's relative size." *Id.*

**2. Technical Prong**

The technical prong of the domestic industry requirement is satisfied when the complainant in a patent-based section 337 investigation establishes that it is practicing or exploiting the patents at issue. *See* 19 U.S.C. § 1337(a)(2) and (3); *Certain Microsphere Adhesives, Process for Making Same & Prods. Containing Same, Including Self-Stick Repositionable Notes*, Inv. No. 337-TA-366, Comm'n Op. at 8, 1996 WL 1056095 (Jan. 16, 1996). "The test for satisfying the 'technical prong' of the industry requirement is essentially [the] same as that for infringement, *i.e.*, a comparison of domestic products to the asserted claims." *Alloc, Inc. v. Int'l Trade Comm'n*, 342 F.3d 1361, 1375 (Fed. Cir. 2003). To prevail, the patentee must establish by a preponderance of the evidence that the domestic product practices one or more claims of the patent. It is sufficient to show that the products practice any claim of that patent, not necessarily an asserted claim of that patent. *See Certain Male Prophylactic Devices*, Inv. No. 337-TA-546, Comm'n Op. at 38 (Aug. 1, 2007).

## IV. U.S. PATENT NO. 9,818,803

### A. Overview

The ’803 patent, entitled “Pixel Arrangement Structure for Organic Light Emitting Display Device” issued on November 14, 2017 to Sang-Shin Lee. JX-0003. The ’803 patent discloses pixel arrangements for OLED displays. *Id.* The claims of the ’803 patent are drawn to the Figure 1 embodiment. JX-0008.406.

FIG.1

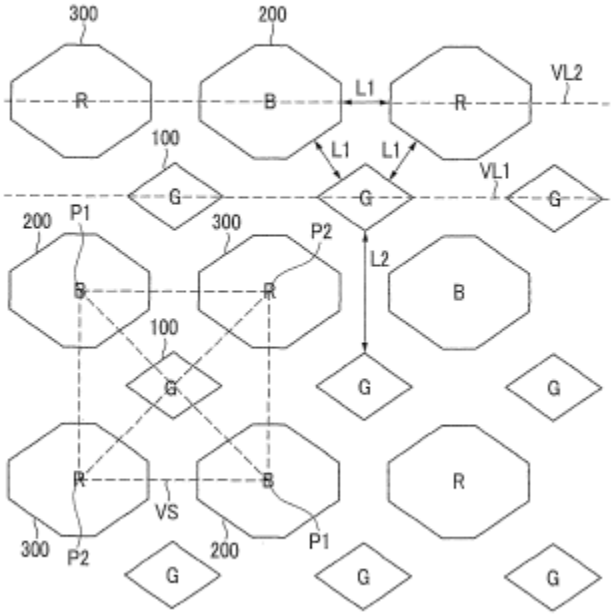


JX-0003 at Fig. 1.

#### 1. Asserted Claims

Complainant asserts claims 5 and 21 of the ’803 patent. CIB at 8. Because several of the asserted claims depend on non-asserted claims, these non-asserted claims are also included below:

1. 1[pre][10] A pixel arrangement structure of an organic light emitting diode (OLED) display, comprising:

   1[a] a plurality of pixels for displaying an image on the OLED display and comprising:

   1[b] a first pixel having a center coinciding with a center of a virtual square;

   1[c] a second pixel separated from the first pixel and having a center at a first vertex of the virtual square;

   1[d] another first pixel on a line defined by the center of the virtual square and the first vertex, the first pixel, the second pixel, and the other first pixel being consecutive pixels on the line from among the plurality of pixels; and

   1[e] a third pixel separated from the first pixel and the second pixel, and having a center at a second vertex neighboring the first vertex of the virtual square,

   1[f] wherein the second pixel has a larger area than that of the third pixel, and

   1[g] wherein the first pixel is configured to emit green light.

2. The pixel arrangement structure of claim 1,

   2[a] wherein the plurality of pixels further comprises another second pixel separated from the first pixel and having a center at a third vertex neighboring the second vertex of the virtual square, and

   2[b] wherein the second pixels are separated from each other by the first pixel.

3. The pixel arrangement structure of claim 2,

   3[a] wherein the plurality of pixels further comprises another third pixel separated from the first pixel and having a center at a fourth vertex neighboring the third vertex of the virtual square, and

   3[b] wherein the third pixels are separated from each other by the first pixel.

4. The pixel arrangement structure of claim 3, wherein the second pixels and the third pixels enclose the first pixel in the virtual square.

5. The pixel arrangement structure of claim 4,

---

[10] For each of the Asserted Patents, I will follow the conventions used by both parties in Complainant's and Respondent Mianyang BOE's Identification of Undisputed Claim Limitations (EDIS Doc. ID 822767( (hereinafter, "Undisputed Claim Limitations").

5[a] wherein the first pixel, the second pixels, and the third pixels have polygonal shapes, and

5[b] each of the second pixels and each of the third pixels has a larger area than the first pixel.

21. The pixel arrangement structure of claim 1, wherein the second pixel has a larger area than that of the first pixel.

### 2. Claim Construction

I construed the following terms from the asserted claims as follows:

| TERM | CLAIM(S) | CLAIM CONSTRUCTION |
|---|---|---|
| "coinciding with" | 1 | "occupying the same place in space" |
| "a third pixel separated from the first pixel" / "another third pixel separated from the first pixel" / "another third pixel separated from the first pixel" / "separated from each other by the first pixel" / "the second pixels and the third pixels enclose the first pixel in the virtual square" | 1-5 | The "first pixel" refers to the claim 1's "a first pixel" and does not refer to the claim 1's "another first pixel"/"the other first pixel." |
| "line" / "lines" | 1 | "straight line" / "straight lines" |
| "center"/ "centers" | 1-3 | center point(s), wherein there is only one center point per pixel |

Order No. 28 at 15.

### 3. Level of Ordinary Skill in the Art

I did not address the level of ordinary skill in the art for the '803 patent in the Markman Order, as the parties did not disagree on a construction for any term in this patent. I did, however, set forth the level of skill for the '578 patent. The '578 patent is a continuation of the '803 patent. *See* JX-0005. Complainant and Staff assert that the level of skill is the same for both patents. CIB

at 63; SIB at 17.[11] I therefore find that a person of ordinary skill in the art with respect to the '803 patent would have had a relevant degree in Electrical Engineering, Computer Engineering, Materials Science, Physics, or the like, and experience in electroluminescence and the design of active matrix displays or pixel arrangements for such displays.

### B. Infringement

Complainant asserts the following with respect to infringement of the '803 patent:

| Accused Products | Claims Infringed |
|---|---|
| [redacted] | 5, 21 |
| [redacted] | 5, 21 |
| [redacted] | 21 |
| BLF Respondents' and Defaulting Respondents' Accused Products | 5, 21 |

CIB at 8. The parties agree that [redacted] Representative Products Stipulation at 3.

#### 1. Methodology

BOE's primary argument with respect to the '803 patent is whether Complainant's expert, Dr. Ioannis Kymissis, applied an appropriate methodology in analyzing infringement based on teardowns of the Accused Products. Specifically, BOE asserts: (1) Dr. Kymissis improperly relied on another expert's flawed measurements; (2) Dr. Kymissis did not properly calculate the pixel centers; and (3) Dr. Kymissis improperly applied "irrelevant and arbitrary manufacturing and measurement tolerances." RIB at 5-9. Complainant and Staff disagree. *See* CIB at 8-10; 44-46;

[11] BOE did not address the appropriate level of skill.

SIB at 22 ("In the Staff's view, Dr. Kymissis' determinations of pixel boundaries and centers are sufficiently reliable and accurate").

For the reasons set forth below, I disagree with BOE's criticisms of Dr. Kymissis' methodology. I note, however, that, even if these criticisms had some merit, Dr. Kymissis based his conclusions on more than just the teardown analyses. Dr. Kymissis "analyzed GDS files[12] reflecting the design of the pixel arrangement structure." CX-1628C-NCT-PSC (Kymissis) at Q/A 37. He also "considered other documents, deposition testimony, and Respondents' contentions." *Id.* I have considered all of this evidence in evaluating infringement and have not relied solely on Dr. Kymissis' analysis of the teardown images.

**a) Reliance on Dr. Adam Fontecchio's Measurements**

With respect to its first argument, BOE explains that "[t]he size and location of BOE's pixels is a key issue SDC must prove." RIB at 5. According to BOE, "Dr. Kymissis' failure to independently verify Dr. Fontecchio's information caused problems." *Id.* As an example, BOE asserts that, for the [redacted] product, the ImageJ[13]-produced images fail "to accurately reflect boundaries of the pixel measured" and include "unnatural measurements" and "strange 'banana-shaped' artifacts.'" *Id.* at 6.

[12] Dr. Kymissis explained that "GDS is a file format commonly used in the industry for the design of integrated circuits. Both [redacted] and [redacted]." CX-1628C-NCT-PSC (Kymissis) at Q/A 44.

[13] Dr. Kymissis explained that "ImageJ is an image processing program developed at the National Institutes of Health and is a commonly used tool for microscope image processing." CX-1628-NCT-PSC at Q/A 39.

I do not find that it was improper for Dr. Kymissis to rely on the measurements taken by Dr. Fontecchio. Dr. Fontecchio conducted teardowns using an optical microscope to capture pixel arrangement structure images. CX-1629C-NCT (Fontecchio) at Q/A 44-47. He then used software to obtain image properties, including pixel boundary outlines, pixel center coordinates, and pixel areas. *Id.*

Dr. Fontecchio described this process to Dr. Kymissis. CX-1628C-NCT-PSC (Kymissis) at Q/A 38. Dr. Kymissis believed that the teardowns performed by Dr. Fontecchio "were very professionally and expertly done." Tr. (Kymissis) at 131:15-19. Dr. Kymissis further noted that he "was satisfied with the quality of the images and with the process that was used to acquire them." *Id.* at 131:21-25. Thus, Dr. Kymissis did not simply accept Dr. Fontecchio's measurements without question. He assured himself that he was comfortable relying upon them.

Nor do I agree with BOE that Dr. Fontecchio's measurements were flawed. BOE criticizes Dr. Fontecchio's use of ImageJ, but the evidence shows that ImageJ is "a commonly used tool" that is "reliable and widely used in the scientific community." CX-1628C-NCT-PSC (Kymissis) at Q/A 39-41; *see also* CX-3427; CX-3428. Dr. Kymissis was familiar with ImageJ and used it in his own work. CX-1628C-NCT-PSC (Kymissis) at Q/A 42; *see also* Tr. (Kymissis) at 132:12-14 ("I agreed with the decision to use ImageJ. ImageJ is a well known and . . . well appreciated piece of software.").

I am also not persuaded by BOE's arguments that the use of ImageJ was inappropriate in this instance. BOE argues that the images "fail to accurately reflect boundaries of the pixels measured, include[] unnatural measurements, and strange 'banana-shaped' artifacts." RIB at 6. Dr. Kymissis credibly explained why he was not concerned with the "banana-shaped" artifacts or non-uniform shapes depicted next to some of the pixels:

CDX-00015C.002. Dr. Kymissis noted that the artifact is not part of the boundary of the pixel defining layer:

Tr. (Kymissis) at 133:21-134:13; *see also id.* at 137:17-22 Because Dr. Kymissis explained why he was not concerned about the existence of the banana shape, I do not find the presence of such a shape to be evidence that ImageJ should not have been used.

Dr. Kymissis also explained why he was not concerned with the non-uniform borders depicted below:

[redacted]

RDX-0013C.4 (depicting RX-1090C). He testified that [redacted]." CX-1628C-NCT-PSC (Kymissis) at Q/A 139.[14] He further explained that "[b]ased on all of the other evidence I mentioned, including the uniformity of the pixels in the arrangement structure, this error does not affect my opinion." *Id.*

Because I find that Dr. Kymissis credibly explained why it was appropriate for him to rely on ImageJ outputs, I find that BOE's criticisms of ImageJ lack merit.

**b) Center Calculation**

BOE argues that Complainant's "pixel center calculations are . . . unreliable." RIB at 7. According to BOE, Dr. Fontecchio's pixel measurements "relied on inaccurate border measurements" and "assumed each pixel had 'uniform material.'" *Id.* BOE also asserts that Complainant "did not use well-known and more reliable means for calculating the pixels' center points, such as calculating a variable-weight centroid factoring in the pixel's luminance." *Id.* BOE

[14] Complainant notes that the R6 pixel is the same as the "23 pixel" depicted in RDX-0013.C.4. CRB at 4; *see also* CDX-0015C (showing a non-illuminated teardown image identifying the R6 pixel); RX-1090C.

further argues that Dr. Kymissis did not apply the centroid algorithm and instead "relied on software to generate center points." *Id.* at 8.

I find that Dr. Kymissis adequately explained his calculation of a pixel's center. He stated that [redacted]." CX-1628C-NCT-PSC (Kymissis) at Q/A 49. He further explained: [redacted] *Id.* at Q/A 51. He noted that [redacted]. *Id.*

Dr. Kymissis also credibly explained why he did not account [redacted] *Id.* at Q/A 683; *see also* Tr. (Pattison) at 249:19-254:11 (conceding that the claims do not have limitations relating to luminance). He further stated that [redacted]" CX-1628C-NCT-PSC (Kymissis) at Q/A 683. I find Dr. Kymissis' explanation to be credible and therefore I reject BOE's contrary arguments.

**c) Manufacturing Tolerance**

BOE argues that Complainant "compounded its measurement errors by improperly applying irrelevant and arbitrary manufacturing and measurement tolerances." RIB at 8. According to BOE, "when SDC's measurements proved that the Accused Products and NIAs do not literally infringe, SDC ignored the evidence and relied on an arbitrary 2 micron tolerance." *Id.*

Dr. Kymissis did apply a [redacted]. CX-1628C-NCT-PSC (Kymissis) at Q/A 62. I do not agree, however, that it was improper for Dr. Kymissis to take manufacturing tolerances into account or that the tolerance he chose was improper. Rather, Dr.

Kymissis provided a detailed explanation as to why he took manufacturing tolerances into account. He stated:

[redacted]

*Id.* at Q/A 61. Dr. Kymissis further noted that [redacted] *Id.* at Q/A 62. Dr. Kymissis' reliance on manufacturing tolerances is further supported by BOE's corporate representative who testified that the [redacted]." CX-1607C (Zhang) at 255:15-17.

Dr. Kymissis also conducted checks on himself to limit the impact of manufacturing deviations and measurement errors. [redacted]." CX-1628-NCT-PSC (Kymissis) at Q/A 67. [redacted] *Id.* at Q/A 69.

Finally, Dr. Kymissis explained how one of skill in the art would understand that the patent specification supports the idea that manufacturing tolerances can be considered. He testified:

> The Diamond Pixel patents[15] discuss challenges associated with manufacturing of pixel arrangements, and explain how the preferred embodiments use a FMM process, which a POSITA would understand results in variances and incorporates manufacturing tolerances. A POSITA will also understand that there will be measurement error in analyzing a manufactured product. A number of claim limitations recite aspects of a pixel arrangement structure using shapes (e.g., squares) and relationships (e.g., distances, or lines through centers of pixels). A POSITA would understand that these terms allow for typical manufacturing tolerances associated with FMM manufacturing processes. For example, a "square" to a POSITA is a four-sided shape that has equal-length sides within manufacturing tolerances. In general, my calculations for each product show that deviations from mathematically perfect objects or relationships are significantly less than 1 or 2 microns (after converting distances expressed in "pixels" to microns in the analyses for the teardown images), which is within the manufacturing tolerance and measurement error. This supports my opinion that such slight deviations are not relevant to whether the claim limitations are satisfied.

*Id.* at Q/A 70. For these reasons, I find that Dr. Kymissis has credibly explained why it was acceptable to consider manufacturing tolerances in his analysis.

In addition to finding Dr. Kymissis' explanation credible and persuasive, I find that BOE's argument should be rejected as demanding perfection that cannot exist. As Complainant notes, BOE's position would "interpret the claims such that *no* manufactured display could infringe." CIB at 46. No display will perfectly match the intended design, which is why there are manufacturing tolerances in the first place. *See, e.g.*, Tr. (Pattison) 266:11-15 ([redacted]).

I am also not persuaded by BOE's argument that "[a]ny tolerance must be based on the PDL [pixel defining layer], not the FMM [fine metal mask]. RRB at 6. According to BOE, fine metal mask manufacturing tolerances are "irrelevant because the pixel defining layer . . . , not the

[15] Dr. Kymissis defines the "Diamond Pixel Patents" as the '803, '578, and the (now terminated) '683 patents. CX-1628-NCT-PSC (Kymissis) at Q/A 2.

FMM, defines the pixel's shapes and sizes, and there is no evidence of a PDL-manufacturing tolerance or that those FMM considerations are relevant to PDL-manufacturing." *Id.* at 6-7. The evidence shows, however, that [redacted] *See, e.g.*, Tr. (Kymissis) at 116:11-13 [redacted] Dr. Kymissis testified that he relied on a 2020 paper (CX-3430) for the 2-micron tolerance and stated that the paper compares metal ablation and photolithography for production of masks. *Id.* at 111:4-9, 111:18-22; *see also id.* at 111:23-112:1. He noted that BOE may have been confused about the applicability of the paper and explained:

[redacted]

[redacted]

Tr. (Kymissis) at 112:2-19. He further explained that the [redacted]

[16] Dr. Kymissis clarified that "[e]rrors only get smaller over time as equipment gets better and processes improve" so the fact that the manufacturing tolerance came from a paper that post-dates the patent by nearly a decade indicates the selected manufacturing tolerance are conservative. Tr. (Kymissis) at 112:25-113:4.

[redacted] *Id.* at 116:14-21; *see also* *id.* at 117:21-25 [redacted] Dr. Kymissis also noted that the 2-micron number is supported by other evidence, such as testimony from BOE employees and BOE's own documents. *Id.* at 113:5-12. For these reasons, I do not agree with BOE's argument.

For all of the above reasons, I am not persuaded by BOE's criticisms of Dr. Kymissis' methodology.

**2.** [redacted]

**a) Claim 5**

Claim 5 of the '803 patent depends on claim 4, which depends on claim 3, which depends on claim 2, which depends on claim 1. JX-0003 at cls. 1-5. Thus, to establish that any Accused Product meets the limitations of claim 5, Complainant must also establish that the limitations of claims 1, 2, 3, and 4 are met.

**i) Limitations 1[pre] and 1[a]**

Limitations 1[pre] and 1[a] recite: "A pixel arrangement structure of an organic light emitting diode (OLED) display, comprising: a plurality of pixels for displaying an image on the OLED display and comprising:" JX-0003 at cl. 1. BOE does not dispute that the [redacted][17], and [redacted] products meet these limitations. Undisputed Claim Limitations at 11-12. The evidence

[17] Complainant asserts that the [redacted] product satisfies each limitation of claim 1 but does not accuse the [redacted] of infringing claim 5. CIB at 8, 11. For efficiency and clarity, I will address whether the [redacted] product meets the limitations of claim 1 in this section.

shows that these limitations are met. CX-1628C-NCT-PSC (Kymissis) at Q/As 75-76, 156-157, 228-229.

**ii) Limitations 1[b] and 1[c]**

Limitations 1[b] and 1[c] recite "a first pixel having a center coinciding with a center of a virtual square" and "a second pixel separated from the first pixel and having a center at a first vertex of the virtual square." JX-0003 at cl. 1.

Complainant asserts that the Accused Products have the "virtual square," as demonstrated by both Dr. Kymissis' teardown and the GDS file calculations. CIB at 14, 15. Complainant further notes that "[i]t is undisputed the claimed pixels are separated from each other as required by limitation 1[c]." *Id.*

BOE argues that Complainant "failed to prove any Accused Products practice [the] 'virtual square' limitations." RIB at 11. According to BOE, [redacted] *Id.* at 12.

Staff asserts that "Dr. Kymissis's determinations of pixel boundaries and centers are sufficiently reliable and accurate." SIB at 22. Accordingly, Staff believes that Complainant has shown that the Accused Products satisfy limitations 1[b] and 1[c]. *Id.*

The evidence shows that the [redacted] products have a "virtual square."[18] For the [redacted] the virtual square is shown in the below image:

[18] Staff notes that the parties have proposed different constructions for this term. SIB at 19. Neither Complainant nor BOE address the construction of "virtual square" in their briefs. *See* CIB 13-15; RIB 11-2; CRB at 6. Additionally, Staff asserts that "the differences between the proposed constructions do not affect the infringement, technical prong, and validity analysis for the '803 patent" and therefore states that the term need not be construed. SIB at 19. I will therefore not be providing a construction for this term.

[redacted]

CDX-0015C.10. Complainant explains that the pixels forming the virtual square are as follows:

[redacted]

CIB at 14; *see also* CX-1628-NCT-PSC (Kymissis) at Q/A 77. Dr. Kymissis analyzed the teardown image and "[redacted]" CX-1628-NCT-PSC (Kymissis) at Q/A 77. In order [redacted] *Id.* He stated that [redacted]" *Id.* He concluded that [redacted] *Id.* He further found that [redacted] *Id.*; *see*

*also id.* at Q/A 78 [redacted]

Dr. Kymissis confirmed this analysis by using the data from the [redacted] product. *Id.*at Q/A 77; *see also* CX-3975C-PSC. According to Dr. Kymissis: "[redacted]" CX-1628C-NCT-PSC (Kymissis) at Q/A 77. Dr. Kymissis also confirmed that the center of the virtual square coincides with the center of G2, noting: [redacted]" *Id.* (citing CX-3957C-PSC).

Finally, Dr. Kymissis indicated that his opinions are "supported by the testimony of BOE's corporate representative, Kai Zhang, who testified that the [redacted] *Id.* at Q/A 77 (citing CX-1607C (Zhang) at 218-219, 235-239).

Dr. Kymissis performed the same analyses for the [redacted] products. *See* CX-1628-NCT-PSC (Kymissis) at Q/A 158-159; 230-231. Accordingly, Dr. Kymissis demonstrated that the [redacted] products meet these limitations.[19]

[19] In its reply brief, BOE asserts that Complainant "violates G.R. 14.2 with respect to its conclusory analysis of [redacted] for several limitations." RRB at 5. I disagree. Complainant explained, for example, that "Dr. Kymissis performed the same analysis for [redacted], generated

I am not persuaded by BOE's noninfringement positions with respect to these limitations. BOE asserts that the [redacted]. RIB at 12. According to BOE, the [redacted]. *Id.* BOE also asserts that Complainant's "measurements of the sides and angles confirm the Accused Products do not meet the virtual square limitations." *Id.*

BOE's argument is grounded in the idea that manufactured products will be geometrically perfect. As noted in section IV.B.1, one of skill would understand that there will be deviations from the designs in the manufactured products. So long as these deviations are within the provided manufacturing tolerances, they are acceptable. CX-1628C-NCT-PSC (Kymissis) at Q/As 61-62. Additionally, the [redacted] *Id.* at Q/A 77 ([redacted] *see also* CX-3957C-PSC.

For these reasons, I find that the [redacted] products meet limitations 1[b] and 1[c].

**iii) Limitation 1[d]**

Limitation 1[d] recites "another first pixel on a line defined by the center of the virtual square and the first vertex, the first pixel, the second pixel, and the other first pixel being consecutive pixels on the line from among the plurality of pixels." JX-0003 at cl. 1.

---

corresponding images and calculations, and concluded these products likewise meet these limitations." CIB at 15; *see also* CX-1628C-NCT-PSC (Kymissis) at Q/As 158-159, 231-232 (explaining that he followed the same methodology as for the [redacted] BOE does not offer noninfringement positions specific to these products. *See* RIB 9-17; RRB 8-11. In such circumstances, it would be inefficient and unnecessary to require a complainant to set forth a limitation-by-limitation analysis for each product in its briefs.

BOE's argument that this limitation is not met is the same as for limitations 1[b] and 1[c]. RIB at 11-12 (addressing limitations 1[b] – 1[e] together). For the reasons set forth above with respect to limitations 1[b] and 1[c], I am not persuaded by BOE's noninfringement argument.

The evidence shows that this limitation is met for the Accused Products. For the [redacted] product, Dr. Kymissis explained that G6 is "[redacted]:

[redacted]

CX-1628C-NCT-PSC (Kymissis) at Q/A 79. He further explained that [redacted] *Id.* Additionally, Dr. Kymissis "[redacted]" and concluded that [redacted]." *Id.*; *see also* CX-3904C; CX-3957C-PSC. Dr. Kymissis performed the same analysis for the [redacted] products. *See* CX-1628C-NCT-PSC (Kymissis) at Q/As 160, 232.

Accordingly, I find that the [redacted] products meet limitation 1[d].

**iv) Limitation 1[e]**

Limitation 1[e] recites "a third pixel separated from the first pixel and the second pixel, and having a center at a second vertex neighboring the first vertex of the virtual square." JX-0003 at cl. 1.

BOE's argument that this limitation is not met is the same as for limitations 1[b] and 1[c]. RIB at 11-12 (addressing limitations 1[b] – 1[e] together). For the reasons set forth above with respect to limitations 1[b] and 1[c], I am not persuaded by BOE's noninfringement argument.

The evidence shows that this limitation is met for the Accused Products. For the [redacted] product, Dr. Kymissis explained that [redacted] CX-1628C-NCT-PSC (Kymissis) at Q/A 80. He further confirmed that [redacted]).." *Id.* Dr. Kymissis performed the same analysis for the [redacted] products. *See id.* at Q/As 161, 233.

Accordingly, I find that the [redacted] products meet limitation 1[e].

**v) Limitation 1[f]**

Limitation 1[f] recites "wherein the second pixel has a larger area than that of the third pixel." JX-0003 at cl. 1.

Complainant asserts that "Dr. Kymissis confirmed each blue pixel has a larger area than each red pixel, which has a larger area than each green pixel, through teardown [redacted]" CIB at 19.

Staff asserts that "Dr. Kymissis's determinations of pixel boundaries and centers are sufficiently reliable and accurate." SIB at 22. Accordingly, Staff believes that Complainant has shown that the Accused Products satisfy limitation 1[f]. *Id.*

BOE does not address this limitation in its briefs. RIB at 11-17; RRB at 9-11. It has therefore waived any argument with respect to this limitation.

The evidence shows that this limitation is met. CX-1628C-NCT-PSC (Kymissis) at Q/A 81, 162, 234; *see also* CX-3904C; CX-3957C-PSC; CX-0189C.192; CX-1607C (Zhang) at 239:18-240:16. Accordingly, I find that the [redacted] products meet limitation 1[f].

**vi) Limitation 1[g]**

Limitation 1[g] recites "wherein the first pixel is configured to emit green light." JX-0003 at cl. 1. BOE does not dispute that the [redacted] products meet this limitation. Undisputed Claim Limitations at 11. The evidence shows that this limitation is met. CX-1628C-NCT-PCS at Q/A 82, 163, 235.

**vii) Limitation 2[a]**

Limitation 2[a] recites "wherein the plurality of pixels further comprises another second pixel separated from the first pixel and having a center at a third vertex neighboring the second vertex of the virtual square." JX-0003 at cl. 2

Complainant asserts that this claim limitation is met for the same reasons as with respect to 1[b] and 1[c]. CIB at 13.

Staff asserts that "Dr. Kymissis's determinations of pixel boundaries and centers are sufficiently reliable and accurate." SIB at 22. Accordingly, Staff believes that Complainant has shown that the Accused Products satisfy limitation 2[a]. *Id.*

BOE does not address this limitation in its briefs. RIB at 11-17; RRB at 9-11. It has therefore waived any argument with respect to this limitation.

The evidence shows that this limitation is met. CX-1628C-NCT-PSC (Kymissis) at Q/A Q/As 83, 164. Accordingly, I find that the [redacted] products meet limitation 2[a].

**viii) Limitation 2[b]**

Limitation 2[b] recites "wherein the second pixels are separated from each other by the first pixel." JX-0003 at cl. 2. BOE does not dispute that the [redacted] products meet this limitation. Undisputed Claim Limitations at 11. The evidence shows that this limitation is met. CX-1628C-NCT-PCS at Q/A 83, 164.

**ix) Limitation 3[a]**

Limitation 3[a] recites "wherein the plurality of pixels further comprises another third pixel separated from the first pixel and having a center at a fourth vertex neighboring the third vertex of the virtual square." JX-0003 at cl. 3.

Complainant asserts that this claim limitation is met for the same reasons as with respect to 1[b] and 1[c]. CIB at 13.

Staff asserts that "Dr. Kymissis's determinations of pixel boundaries and centers are sufficiently reliable and accurate." SIB at 22. Accordingly, Staff believes that Complainant has shown that the Accused Products satisfy limitation 3[a]. *Id.*

BOE does not address this limitation in its briefs. RIB at 11-17; RRB at 9-11. It has therefore waived any argument with respect to this limitation.

The evidence shows that this limitation is met. CX-1628C-NCT-PSC (Kymissis) at Q/A Q/A 84, 165. Accordingly, I find that the [redacted] products meet limitation 3[a].

**x) Limitation 3[b]**

Limitation 3[b] recites "wherein the third pixels are separated from each other by the first pixel." JX-0003 at cl. 3. BOE does not dispute that the [redacted] products meet this limitation. Undisputed Claim Limitations at 11. The evidence shows that this limitation is met. CX-1628C-NCT-PCS at Q/A 84, 165.

**xi) Claim 4**

Claim 4 recites "[t]he pixel arrangement structure of claim 3, wherein the second pixels and the third pixels enclose the first pixel in the virtual square." JX-0003 at cl. 4.

Complainant asserts that the evidence shows that this claim is met. CIB at 21-22. Staff agrees. SIB at 24.

BOE does not address this claim in its briefs. RIB at 11-17; RRB at 9-11. It has therefore waived any argument with respect to the additional limitation of claim 4.

The evidence shows that the additional limitation of claim 4 is met. CX-1628C-NCT-PSC (Kymissis) at Q/A 85, 166. Accordingly, I find that the [redacted] products meet claim 4.

**xii) Limitation 5[a]**

Limitation 5[a] recites "wherein the first pixel, the second pixels, and the third pixels have polygonal shapes." JX-0003 at cl. 5.

Complainant asserts that the [redacted] have pixels with "polygonal shapes." CIB at 23. Complainant notes that "the pixels have shapes with only straight sides – no sides are curved." *Id.* at 24. Even if the [redacted] did not literally infringe, Complainant asserts that these products would infringe under the doctrine of equivalents. *Id.* at 25.

BOE argues that "[n]one of the Accused Products meet [5-a], which requires 'polygonal shapes.'" RIB at 12. BOE asserts that "polygonal shapes" should be defined as "planar shapes

(two-dimensional) having *only* straight sides." *Id.* (emphasis added). According to BOE, shapes with curved edges cannot be polygons. *Id.* at 13. BOE further asserts that Complainant's doctrine of equivalents argument is meritless. *Id.* at 15.

Staff argues that Complainant "has failed to shoulder its burden of proving that the Accused Products have pixels with 'polygonal shapes.'" SIB at 27. Staff notes that "Dr. Kymissis does not testify that the pixels shown in the teardowns of the Accused BOE Products have polygonal shapes." SIB at 24. "Rather, Dr. Kymissis opines that shapes shown in the GDS files for these products are polygonal." *Id.* [redacted] *Id.* at 25 (quoting Tr. (Kymissis) at 183:20-25). Staff also disagrees with Complainant's doctrine of equivalence argument, asserting that "[i]n essence, [Complainant] seeks to read 'polygonal shape' as 'shape.'" *Id.* at 27 n.3.

It is undisputed that the pixels of the Accused Products have rounded corners. For example, in the teardown image of [redacted] the pixels appear as follows:

CDX-0015C.10. The dispute is whether shapes with rounded corners can be considered "polygonal shapes." Complainant does not specifically set forth a construction of this phrase in its briefs,[20] but contends that one of skill "would understand 'polygonal' encompasses shapes with rounded corners." CIB at 24. BOE and Staff assert that the term means "planar shapes (two-dimensional) having only straight sides." RIB at 12; SIB at 19.

There is support in the record for a finding that one of skill would understand "polygon" to be "a shape with all straight sides." RX-1084C-NCT (Pattison) at Q/A 131 (stating that "[t]he basic geometrical definition of a polygon is a shape with all straight sides"). The patentee did not use the term "polygon," however, and instead chose the words "polygonal shape."

The specification provides some guidance as to the meaning of "polygonal shape." The figures included in the '803 patent depict pixels with straight sides and no curved corners:

[20] BOE and Staff state that Complainant's position is that "polygonal shapes" means "planar shapes (two dimensional) with straight sides." *See* RIB at 12; SIB at 19.

FIG.1

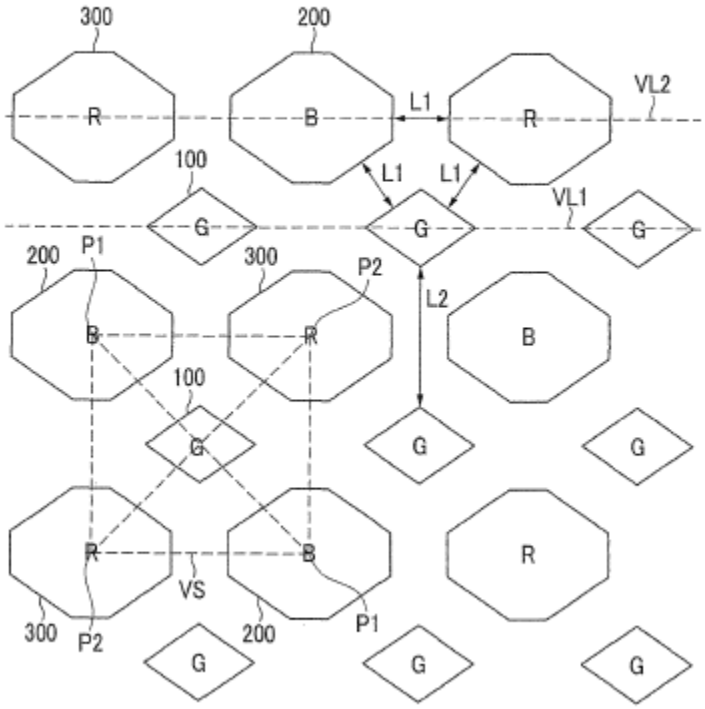


JX-0003 at Fig. 1. The patent notes, however, that "even though each of the pixels are drawn as stereotypical polygonal shapes in the drawings, the present invention is not limited to this shape. That is, the shapes of the pixels may be modified to avoid interference with the other components of the OLED (e.g., wirings) within the spirt and scope of the amended claims." *Id.* at 3:41-46. Thus, it would be improper to limit "polygonal shape" to a stereotypical polygon. The patent does not, however, specifically indicate whether or not a shape with curved corners would meet this definition.

The record contains conflicting opinions on the issue from people of skill. Dr. Kymissis explains that [redacted] CX-1628C-NCT-PSC (Kymissis) at Q/A 91. Dr. P. Morgan Pattison, on the

other hand, disagrees and opines that one of skill "[redacted]." RX-1084C-NCT (Pattison) at Q/A 140.

I reject Dr. Pattinson's proposal. First, it does not account for the difference in the language used in the patent ("polygonal shape" vs "polygon"). Nor does Dr. Pattison explain how his proposed definition fits in with the specification's caveat that "polygonal shape" should not be defined as a stereotypical polygon. Additionally, Dr. Pattison testified [redacted] *Id.* at 329:8-11.

I also find that Dr. Pattison's testimony, in general, lacked credibility. His testimony at the hearing revealed that he took positions he knew to be contrary to the evidence and that he would change his opinion as necessary to fit the circumstances. *See, e.g.*, Tr. (Pattinson) at 259:2-260:15 ([redacted]); *id.* at 328:21-329:7 (indicating that he applied a different understanding of "polygonal shape" in his invalidity analysis than his infringement analysis). I therefore afford his testimony less weight. *HTC Corp. v. Cellular Commc'ns Equip., LLC*, 877 F.3d 1361, 1370 n.4 (Fed. Cir. 2017).

Dr. Kymissis, on the other hand, appeared to be credible on the stand. He conceded points when necessary and provided thorough explanations for why he reached his opinions. I thus give his understanding that one of skill would understand a shape with rounded corners to qualify as a "polygonal shape" more weight. Dr. Kymissis' understanding is also supported by other extrinsic

evidence. As even Dr. Pattison confirmed, [redacted]:

[redacted]

CX-0090C at 7 (BOE document); *see id.* at 4 [redacted]); Tr. (Pattison) at 325:13-326:1 ([redacted]); *see id.* at 326:5-8 (testifying that BOE employees [redacted]"); *id.* at 323:17-324:5 (confirming that [redacted]).

For these reasons, I will construe the term "polygonal shape" to have its plain and ordinary meaning that one of ordinary skill in the art would ascribe to that term when read in the context of the claim, specification, and prosecution history. *See Phillips v. AWH Corp.*, 415 F.3d 1303, 1313–14 (Fed. Cir. 2005) (*en banc*). The plain and ordinary meaning of the term "polygonal shape" does not preclude rounded corners but does preclude a shape with a rounded side. *See* Tr. (Kymissis) at 184:5-7.

The evidence shows that the pixels of the Accused Products have "polygonal shapes."[21] For example, with respect to the [redacted] product, the pixels appear as follows:

[redacted]

CX-3456C; CX-3457C. As seen in the images, each of the shapes [redacted]. Dr. Kymissis' testimony confirms that one of skill would understand these shapes to be "polygonal shapes." CX-1628C-NCT-PSC (Kymissis) at Q/A 91; *see also id.* at Q/A 167.

I am not persuaded by Staff's arguments that Dr. Kymissis did not demonstrate that the pixels are polygonal shapes. According to Staff, "Dr. Kymissis does not testify that the pixels shown in the teardowns of the Accused BOE Products have polygonal shapes," but instead relies on the GDS files. SIB at 24. While Dr. Kymissis referenced the GDS files, he also testified that the images as shown in the teardown met the limitation. He testified that the pixels would meet the limitation under either Complainant's or BOE/Staff's proposal. CX-1628C-NCT-PSC (Kymissis) at Q/A 86 [redacted]

[21] BOE asserts that Complainant's argument that claim 5 is met is conclusory. RRB at 5 (stating that "SDC offers only one conclusory statement to meet its burden to prove the accused pixels are polygonal" and that the remainder of the argument "purports to rebut BOE's argument"). I disagree that Complainant has violated Ground Rule 14.2. Complainant stated that the pixels have "polygonal shapes" and provided images confirming this. CIB at 23-24. Complainant further stated that "the pixels have shapes with only straight sides – no sides are curved." *Id.* at 24. Complainant then dedicated several pages to explaining why the existence of rounded corners does not lead to the opposite conclusion. CIB at 24-26; *see also* CRB at 6-10. This is sufficient for Complainant to meet its burden. Complainant did not merely state that the limitation is met but instead explained *why* it was met.

He also confirmed that he did not agree that the [redacted]." *Id.* at Q/A 90. Finally, he explained that [redacted] Tr. (Kymissis) at 204:16-19. Accordingly, I find that Complainant's have met their burden to show that the pixels are polygonal shapes.

Accordingly, I find that the [redacted] products meet this limitation.

**xiii) Limitation 5[b]**

Limitation 5[b] recites "each of the second pixels and each of the third pixels has a larger area than the first pixel." JX-0003 at cl. 5.

Complainant asserts that this limitation is met for the same reasons as for claim limitation 1[f]. CIB at 26.

BOE does not address this limitation in its briefs. RIB at 11-17; RRB at 9-11. It has therefore waived any argument with respect to this limitation.

The evidence shows that this limitation is met. CX-1628C-NCT-PSC (Kymissis) at Q/A Q/A 102, 169; *see also* CX-3094C; CX-3957C-PSC; CX-0189C.192; CX-1607C (Zhang) at 239:18-240:15. Accordingly, I find that the [redacted] products meet limitation 5[b].

**xiv) Conclusion**

For these reasons, I find that the [redacted] products infringe claim 5 of the '803 patent. I further find that the [redacted] product meets the limitations of claim 1.

**b) Claim 21**

Claim 21 recites "[t]he pixel arrangement structure of claim 1, wherein the second pixel has a larger area than that of the first pixel." JX-0003C. BOE does not dispute that the additional

limitation of claim 21 is met. Joint Notice Concerning Investigation Narrowing Efforts and Undisputed Claim Limitations (July 26, 2024) (EDIS Doc. ID 827355).

I previously found that the [redacted] products satisfy the limitations of claim 1. The evidence further shows that the [redacted] satisfy the additional limitation of claim 21. CX-1628C-NCT-PCS at Q/A 103-104, 170-171, 236.

Accordingly, I find that [redacted] products infringe claim 21.

**3. Redesigned Products**

BOE explains that "[redacted]" RIB at 16. BOE notes that Complainant "does not allege–thus waived – that NIA [redacted] infringe the '803 patent." *Id.*

Complainant does not introduce any evidence of infringement. As such, it has failed to meet its burden to show that NIA [redacted] infringe the '803 patent. *See Spansion*, 629 F.3d at 1349 (holding that complainant bears the burden of proving infringement of the asserted patent claims by a preponderance of the evidence).

**4. BLF Accused Products**

The BLF Respondents stipulated that Injured Gadgets IPXS-AS-FX5 is representative of all of the other BLF Accused Products. Supplemental Joint Stipulation Regarding Representative Products at 3 (EDIS Doc ID 822286) ("BLF Representative Products Stipulation"). The BLF Respondents also stated that they do not contest infringement of any of the asserted claims. The BLF Respondents' Identification of Undisputed Claim Limitations at ¶ 3 (EDIS Doc. ID 822745) ("The BLF Respondents dispute no claim limitation of the Asserted Claims with respect to infringement.") (hereinafter, "BLF Undisputed Limitations"). The evidence in the record shows

that the BLF Accused Products infringe claims 5 and 21 of the '803 patent. CX-1628C-NCT-PSC (Kymissis) at Q/As 402-423.

Nor am I persuaded that I should find noninfringement with respect to the BLF Respondents. Staff argues that the pixel arrangements in Injured Gadget's IPXS-AS-FX5 show that the "vertical corners of the red pixels appear to be substantially unrounded while the horizontal corners are substantially rounded." SIB at 25-26. Staff further asserts that "[e]ach corner of the green pixels is rounded." *Id.* at 26. Staff notes that "Dr. Kymissis has not articulated the degree of rounding that would have been expected by a POSITA." *Id.*

I am not concerned that Dr. Kymissis did not indicate what degree of rounding one of skill would find appropriate or expected. Dr. Kymissis analyzed the accused products to determine if they infringe. The fact that he did not set forth the precise boundaries as to whether other hypothetical shapes would infringe is not problematic. Additionally, even if the Commission were to find that Complainant did not show that the BLF Accused Products infringe claim 5, Staff does not dispute that the BLF Accused Products infringe claim 21. Thus, the ultimate conclusion of infringement of the '803 patent would not change.

**5. Defaulting Respondents' Accused Products**

Complainant has shown that the Defaulting Respondents' Accused Products meet the limitations of claims 5 and 21 of the '803 patent. CX-1628C-NCT-PSC (Kymissis) at Q/A 518-573. Accordingly, I find that the Defaulting Respondents' Accused Products infringe claims 5 and 21 of the '803 patent.

**6. Conclusion**

As set forth above, I find that the [redacted] products, BLF Accused Products, and the Defaulting Respondents' Accused Products infringe claims 5 and 21 of the '803 patent. Because

[redacted], I find that [redacted] also infringes claims 5 and 21. I further find that the [redacted] product infringes claim 21. Because [redacted], I find that [redacted] also infringes claim 21. Finally, I find that NIA [redacted] do not infringe any asserted claim.

### C. Technical Prong

Complainant asserts that the [redacted] practice claims 5 and 21 and that the [redacted] practices claim 21. CIB at 52. The parties agreed that these [redacted] products are each representative of other products, as shown below:

| The '803, '683, and '578 Patents | | |
|---|---|---|
| Group | Products[3] | Representative Product |
| [redacted] | | |

Representative Products Stipulation at 4-5.

Staff agrees that Complainant has demonstrated that the Domestic Industry products practice claim 21 but asserts that the [redacted] products do not practice claim 5. SIB at 34-38. Staff explains that the Domestic Industry products do not practice claim 5 because the pixels are not "polygonal shapes." *Id.* at 37-38. Staff argues, however, that BOE's criticisms regarding Dr. Kymissis' methodology should be rejected. *Id.* at 34-35.

BOE includes a one paragraph argument as to why it disagrees that the technical prong is met for both the '803 and '578 patents. RIB at 17. For the '803 patent, BOE first argues that Complainant "did not meet its burden to prove DI because Dr. Kymissis' methodology for calculating the center points and [redacted] was flawed and inconsistent." *Id*. For the reasons set forth in Section IV.B.1., I reject this argument. Additionally, Dr. Kymissis credibly explained why [redacted] did not affect his analysis. CX-1628-NCT-PSC (Kymissis) at Q/A 585-590. Further, as Staff notes: "Dr. Kymissis compared the teardown results for the DI Products to the DI Products' GDS files and found that the teardown results were consistent with the GDS files." SIB at 35. [redacted] *Id.*[22]

Next, BOE argues that Complainant "failed to prove the DI Products meet the 'enclose' limitation of claim 4 . . . or feature 'polygonal shapes' required by claim 5." RIB at 17. Even if BOE was correct that Complainant did not show that the products practice the limitations of claims 4 and 5, Complainant has demonstrated that it meets the technical prong. Aside from the methodology argument addressed above, BOE does not make any argument specific to claim 21.

[22] Staff also argues that I should reject BOE's argument that Dr. Kymissis failed to account for the DI Products [redacted] SIB at 35. BOE did not make this argument in its briefs. RIB at 17. To the extent that BOE intended to maintain this argument, I find that it is waived.

*See* RIB at 17; RRB at 11. Further, the evidence shows that the [redacted] practice claim 21. CX-1628-NCT-PSC (Kymissis) at Q/A 592-600, 610-611, 661-669-676, 679-681. A complainant need only show that its products practice one claim for the technical requirement to be met. *See Certain Soft-Edge Trampolines & Components Thereof*, Inv. No. 337-TA-908, Comm'n Op. at 54 (May 1, 2015) ("[T]he prevailing rule is that a complainant need only show that it practices one claim of an asserted patent . . . to meet the technical prong of the domestic industry requirement."); *see also Certain Printing & Imaging Devices & Components Thereof*, Inv. No. 337-TA-690, Comm'n Op. at 25 (Nov. 2011) ("The technical prong concerns whether complainant practices at least one claim of the asserted patents."). Thus, it is unnecessary for Complainant to establish that its products practice additional claims.

For these reasons, I find that the technical prong is met for the '803 patent.

**D. Invalidity**

BOE asserts that the '803 patent is invalid because: (1) U.S. Patent No. 7,091,986 ("Phan") anticipates claims 1-4 and 21 (RIB at 34-37); (2) Phan and U.S. Patent No. 6,366,025 ("Yamada") render claim 5 obvious (RIB at 37-39); and (3) U.S. Patent No. 6,897,855 ("Matthies") and Yamada render the asserted claims obvious (RIB 39-41).

**1. Phan**

Complainant argues that Phan does not teach an OLED display, as required by limitations 1[pre] and 1[a]. CIB at 63. Complainant further asserts that Phan "does not disclose pixels arranged in a 'virtual square.'" *Id.* at 64.

Staff agrees that Phan does not disclose either an OLED display or the "virtual square" limitation. SIB at 40-43.

### a) Virtual Square

The evidence shows that Phan discloses a quad pixel display, as can be seen in Figure 12:

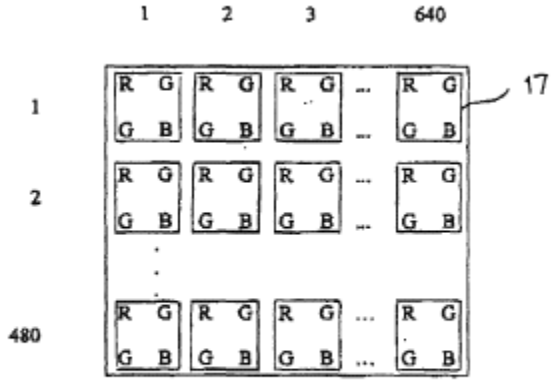


FIG. 12

RX-0169 at Fig. 12, 5:55-60. Additionally, Phan discloses that subpixels can be resized, as shown in in Figure 11b:

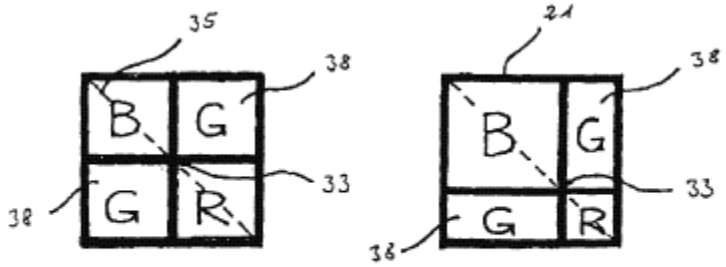


FIG. 11a FIG 11b

*Id.* at Fig. 11b. According to BOE, "[i]nserting the 11b structure into Fig. 12's display meets [1-b-[1-e], 2, and 3." RIB at 36.

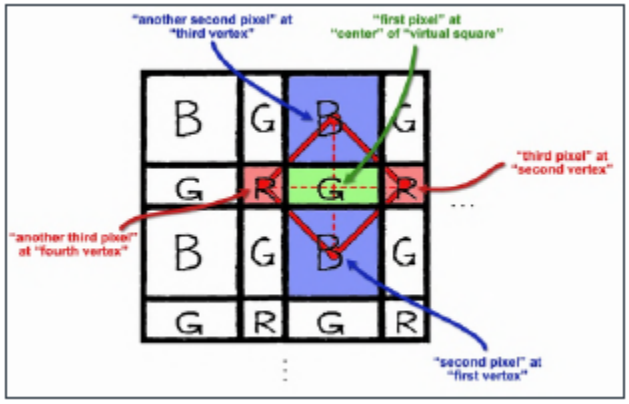


*Id.*

Complainant argues that the resized pixels of 11b cannot be inserted into Figure 12 in the manner BOE claims. Complainant notes that Figure 12 "clearly shows spaces between quad-pixels" which are "necessary for the display to function." CIB at 64. "When replacing Figure 12's quad-pixels with copies of Figure 11b," however, BOE "improperly remove[] the spaces, contradicting Phan's teachings." *Id.*

Staff agrees that "Phan does not disclose the claimed 'virtual square." SIB at 42. Staff notes that the figure on which Dr. Pattison relies "does not appear in Phan" and is instead "Dr Pattison's purported implementation of Figure 12's pixel arrangement using Figure 11b's pixel." *Id.* at 43. Staff notes that this implementation "removes the gaps" and that "[r]etaining the gaps results in a pixel arrangement that does not satisfy the 'virtual square' limitations." *Id.*

I find that BOE has not proven, by clear and convincing evidence, that one of skill would insert the pixel of Figure 11b into the pixel arrangement of Figure 12 and remove the spaces.[23] In response to Complainant and Staff's arguments, BOE asserts that the figures are not drawn to scale

[23] If the spaces are not removed, Phan does not satisfy the "virtual square" limitation. CDX-0075C.11; CX-1241C (Kymissis) at Q/A 69; *see also* Tr. (Pattison) at 297:10-15 (acknowledging that Phan's pixels could be laid out in a way that would not form a virtual square).

and that one of skill "would arrange the sub-pixels and pixels so that there is equal spacing between them." RIB at 36-37. This does not address the issue, however. The issue is not whether Phan discloses that there should be equal spacing between the pixels but whether Phan discloses that one of skill would simply remove the spaces that Phan does disclose. BOE does not cite to support that one would do so. Additionally, the evidence shows that the spaces are necessary for the display to function. CX-1241C-NCT (Kymissis) at Q/A 74 ("Assuming Phan were actually directed to OLED display embodiments . . . , then Phan would need spaces between its adjacent quad pixels to provide room for power and signal lines."); Tr. (Kymissis) at 1119:22- 1120:24 (explaining why Phan require the spacing between the pixels to work).

Nor am I persuaded by BOE's arguments that "Phan's figures do not include markings to indicate what the spacing between pixels or sub-pixels should be" or that Complainant's "proposed spacing would . . . contradict Phan's teaching that dynamic pixels overlap the static pixels via even spacing between sub-pixels and adjacent pixels." RRB at 17. It is not Complainant's burden to show why its proposed spacing is correct. It is BOE that bears the burden to prove that one of skill would be motivated to remove the spaces that are shown in the figures of the patent. BOE has not done so.

Accordingly, I find that BOE has not shown that Phan anticipates the '803 patent.

**2. Phan/Yamada**

BOE asserts that it is undisputed that Phan teaches limitation 5[a]. RIB at 37. BOE further asserts that "Phan in view of Yamada teaches an arrangement that resizes (per Yamada) the pixels in Phan's square pixel arrangement." *Id.*

BOE makes no effort to explain how Yamada teaches the "virtual square" that I found was not disclosed in Phan. BOE does not address claim 1 (on which claim 5 depends) in its briefs. RIB

at 37-39; RRB at 18. Nor does it mention "virtual square." *Id.* As such, BOE does not meet its burden to show that Phan and Yamada render claim 5 obvious.

**3. Matthies/Yamada**

BOE asserts that the combination of Matthies and Yamada renders the asserted claims obvious. RIB at 39. BOE also argues that "[a] POSITA would have been motivated, and have a reasonable expectation of success, to apply Yamada's teachings to Matthies." RIB at 23; *see also id.* at 41.

Complainant argues that "Yamada's AMOLEDs are fundamentally different" than Matthies' passive-matrix displays. CIB at 67. Complainant further asserts that "BOE's combination contravenes Matthies' design rules" and "would not simplify design or manufacturing." *Id.* at 69. According to Complainant, "[e]ven if POSITAs attempted combining these references, they would not arrive at the claimed pixel arrangements." *Id.*

Staff agrees BOE has failed to meet its burden. RIB at 50. Staff notes that Dr. Pattison offers two reasons that one would be motivated to modify the pixels of Matthies, but that "Matthies addresses both issues without varying pixel size." *Id.* at 48. Staff also notes that "varying pixel size by color would be inconsistent with Matthies' teachings." *Id.* at 49.

To successfully invalidate the asserted claims, BOE must provide "an apparent reason to combine the known elements in the fashion claimed by the patent at issue." *KSR Int'l Co. v. Teleflex Inc.*, 550 U.S. 398, 418 (2007); *see also InTouch Techs. v. VGO Commcn's*, 751 F.3d 1327, 1351 (Fed. Cir. 2014) ("A reason for combining disparate prior art references is a critical component of an obviousness analysis.") BOE offers two reasons why one of skill would be motivated to combine Matthies and Yamada. Neither of these reasons is persuasive.

First, BOE argues that "Yamada addresses Matthies' concerns relating to 'aging' and 'decay' by simplifying balancing pixel luminance and pixel current." RIB at 24. BOE offers no explanation as to how Yamada addresses this problem. *See id*. Without more, BOE cannot meet its burden to show that one of skill would combine the references for this reason.

Second, BOE asserts that "Yamada simplifies Matthies' design by rendering obsolete the memory and circuits Matthies used to compensate for aging and decay." RIB at 34. BOE does not explain why this is so. Nor does BOE explain why one of skill would want to render the memory and circuits of Matthies obsolete. As Complainant notes, the evidence suggests that the circuits of Matthies are necessary for the display to function. CIB at 69. BOE does not adequately address this concern.

Thus, even if I were to find that the combination of Matthies and Yamada discloses all the limitations of the asserted claims, I find that BOE has not proven that one of skill would be motivated to combine the references.

Accordingly, I find that Matthies with Yamada does not render the asserted claims obvious.

#### 4. Secondary Considerations

Secondary considerations of nonobviousness may rebut a prima facie case of obviousness. Here, where BOE has not made out a prima facie case of obviousness, there is no showing to rebut. Accordingly, I need not consider any secondary considerations of nonobviousness.

## V. U.S. PATENT NO. 11,594,578

### A. Overview

The '578 patent, entitled "Pixel Arrangement Structure for Organic Light Emitting Display Device" issued on February 28, 2023 to Sang-Shin Lee. JX-0005. The '578 patent discloses pixel

arrangements for OLED displays. *Id.* The claims of the ’578 patent are drawn to the Figure 5 embodiment. JX-0010.166.

FIG.5

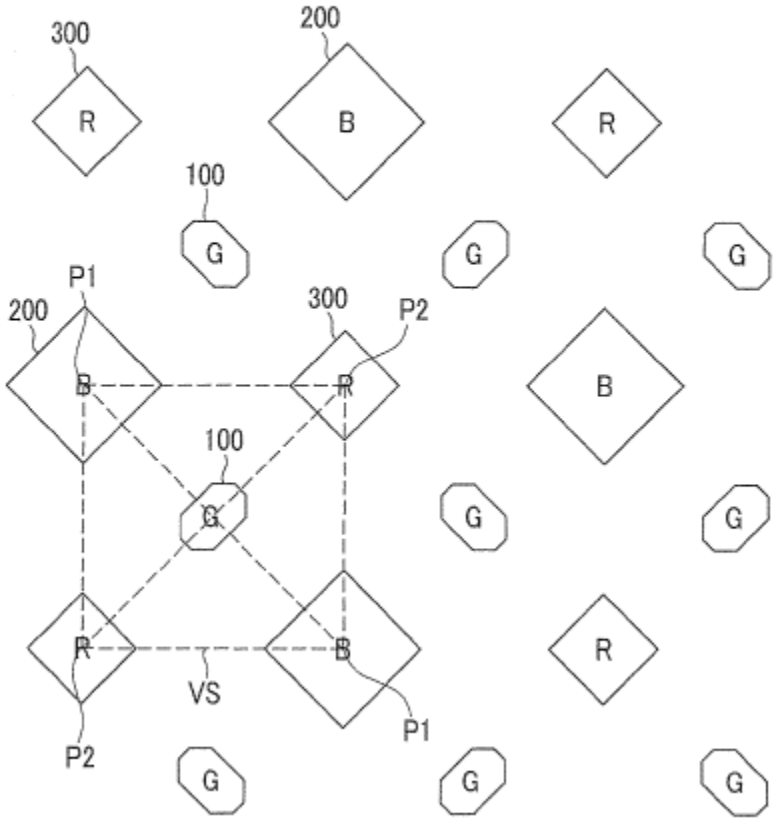


JX-0003 at Fig. 5.

### 1. Asserted Claims

Complainant asserts claims 5, 10, 17, 40, 41, and 47 of the ’578 patent. CIB at 8. Because several of the asserted claims depend on non-asserted claims, these non-asserted claims are also included below:

1. 1[pre] A pixel arrangement structure of an organic light emitting diode (OLED) display, the pixel arrangement structure comprising a plurality of pixels comprising:

1[a] a plurality of first pixels;

1[b] a plurality of second pixels; and

1[c] a plurality of third pixels,

1[d] wherein the OLED display comprises a pixel defining layer defining areas of the first pixels, the second pixels, and the third pixels,

1[e] wherein the first pixels, the second pixels, and the third pixels are configured to emit different color lights,

1[f] wherein the first pixels are arranged in first sets extending along a first direction to form respective first lines,

1[g] wherein the second pixels and the third pixels are alternately arranged in second sets extending along the first direction to form respective second lines parallel to the first lines,

1[h] wherein one of the second lines passes through centers of the second pixels and the third pixels in a corresponding one of the second sets and passes between the first pixels in corresponding adjacent ones of the first sets,

1[i] wherein the first lines and the second lines are alternately arranged,

1[j] wherein the first pixels are also arranged in third sets extending along a second direction that is perpendicular to the first direction to form respective third lines,

1[k] wherein the second pixels and the third pixels are also alternately arranged in fourth sets extending along the second direction to form respective fourth lines that are parallel to the third lines,

1[l] wherein the third lines and the fourth lines are alternately arranged,

1[m] wherein the first pixels and either the second pixels or the third pixels are alternately arranged along a third direction, which crosses the first direction and the second direction,

1[n] wherein a region having a width in the second direction that is equal to a width of the first pixels in the second direction, extending parallel to the first direction, and completely overlapping a row of the first pixels extending in the first direction, is entirely offset in the second direction from at least one of the second pixels or the third pixels in at least one of rows of the second pixels and the third pixels adjacent to the row of the first pixels, and

1[o] wherein a shortest distance between two nearest ones of the first pixels in one of the first sets is greater than a shortest distance between one of the second pixels and one of the third pixels that are nearest each other in one of the second sets.

5. The pixel arrangement structure of claim 1, wherein a shortest distance between the first pixels and the second pixels, and a shortest distance between the first pixels and the third pixels, are a same first length.

10. The pixel arrangement structure of claim 1, wherein each of the second pixels has a larger area than each of the third pixels.

17. The pixel arrangement structure of claim 1, wherein each of the first pixels has a smaller area than the second pixels and the third pixels.

40. The pixel arrangement structure of claim 1,

40[a] wherein each of the first pixels has two elongated sides that are elongated in the third direction or a fourth direction crossing the third direction and different from the first and second directions, and two connection portions that connect the two elongated sides to each other at respective ends, and

40[b] wherein at least one of the two connection portions has a length that is greater than a shortest distance between the two elongated sides.

41. The pixel arrangement structure of claim 1, wherein a shortest distance between two elongated sides of one of the first pixels is less than a shortest distance between the one of the first pixels and a nearest one of the second pixels in the third direction or a fourth direction crossing the third direction.

45. 45[pre] A pixel arrangement structure of an organic light emitting diode (OLED) display, the pixel arrangement structure comprising:

45[a] a plurality of first pixels, wherein the first pixels have a shape comprising edges;

45[b] a plurality of second pixels; and

45[c] a plurality of third pixels,

45[d] wherein the OLED display comprises a pixel defining layer defining areas of the first pixels, the second pixels, and the third pixels,

45[e] wherein the first pixels, the second pixels, and the third pixels are configured to emit different color lights,

45[f] wherein only one of the second pixels and the third pixels is included in a virtual quadrangle containing outer edges comprising some of the edges of a group of four neighboring ones of the plurality of first pixels, all portions of all others of the second pixels and the third pixels being outside of the virtual quadrangle, and

45[g] wherein a shortest distance between any two of the group of four neighboring ones of the plurality of first pixels is greater than a shortest distance between the only one of the second pixels and the third pixels included in the virtual quadrangle and a nearest one of the second pixels or the third pixels in a direction perpendicular to any side of the virtual quadrangle

47. The pixel arrangement structure of claim 45, wherein the virtual quadrangle does not cross any other of the first pixels, the second pixels, or the third pixels.

### 2. Claim Construction

I construed the following terms from the asserted claims as follows:

| TERM | CLAIM(S) | CLAIM CONSTRUCTION |
|---|---|---|
| "line" / "lines" | 1 | "straight line" / "straight lines" |
| "center"/ "centers" | 1 | center point(s), wherein there is only one center point per pixel |
| "entirely offset" | 1 | Plain and ordinary meaning |
| "arranged along" | 1 | located on or near the length of a line extending in |
| "larger area" | 10 | Plain and ordinary meaning |
| "smaller area" | 17 | Plain and ordinary meaning |
| "virtual quadrangle" | 45, 47 | "quadrangle formed by imaginary lines that can be superimposed to describe relationships among pixels" |
| "wherein a shortest distance between any two of the group of four neighboring ones of the plurality of first pixels is greater than a shortest distance between the only one of the second pixels and the third pixels included in the virtual quadrangle and a nearest one of the second pixels or the third pixels in a direction perpendicular to any side of the virtual quadrangle" | 45 | "wherein a shortest distance between any two of the four neighboring first pixels (as defined previously in the claim) is greater than a shortest distance between the second or third pixel included in the virtual quadrangle and a nearest one of the second or third pixels in a direction perpendicular to any side of the virtual quadrangle" |

Order No. 28 at 15, 54, 58-59.

### 3. Level of Ordinary Skill in the Art

I previously found that a person of ordinary skill in the art with respect to the '578 patent would have had a relevant degree in Electrical Engineering, Computer Engineering, Materials Science, Physics, or the like, and experience in electroluminescence and the design of active matrix displays or pixel arrangements for such displays. Order No. 28 at 13.

## B. Infringement

Complainant asserts the following with respect to infringement of the '578 patent:

| Accused Products | Claims Infringed |
|---|---|
| [redacted] | 5, 10, 17, 40 |
| [redacted] | 5, 10, 17, 40, 41 |
| [redacted] | 5, 10, 40, 41 |
| [redacted] | 5, 10, 17, 40, 41 |
| NIA[redacted] | 47 |
| BLF Respondents' and Defaulting Respondents' Accused Products | 5, 10, 17, 40, 41 |

CIB at 8. The parties agree tha[redacted]

[redacted]Representative Product Stipulation at 3.

As with the '803 patent, BOE argues that Dr. Kymissis' methodology is flawed. RIB at 5-9 (asserting the same arguments for both patents). For the same reasons as set forth in Section IV.B.1, I am not persuaded by BOE's arguments.

### 1. [redacted] Products

#### a) Claim 5

Claim 5 of the ’578 patent depends on claim 1. JX-0005 at cl. 5. Thus, to establish that any Accused Product meets the limitations of claim 5, Complainant must also establish that the limitations of claim 1 are met.

##### i) Limitations 1[pre] – 1[e]

Limitations 1[pre] through 1[e] recite: “A pixel arrangement structure of an organic light emitting diode (OLED) display, the pixel arrangement structure comprising a plurality of pixels comprising: a plurality of first pixels; a plurality of second pixels; and a plurality of third pixels, wherein the OLED display comprises a pixel defining layer defining areas of the first pixels, the second pixels, and the third pixels, wherein the first pixels, the second pixels, and the third pixels are configured to emit different color lights.” JX-0005 at cl. 1. BOE does not dispute that the [redacted] products meet these limitations. Undisputed Claim Limitations at 12-13. The evidence shows that these limitations are met. CX-1628C-NCT-PCS (Kymissis) at Q/A 121-124, 190-193, 252-255, 332-335.

##### ii) Limitations 1[f] and 1[g]

Limitations 1[f] and 1[g] recite “wherein the first pixels are arranged in first sets extending along a first direction to form respective first lines,” and “wherein the second pixels and the third pixels are alternately arranged in second sets extending along the first direction to form respective second lines parallel to the first lines.” JX-0005 at cl. 1.

Complainant asserts that “[redacted] meet these limitations, which relate to the arrangement of pixels in sets extending to form alternating lines.” CIB at 27. BOE does not

address this limitation in its briefs. RIB at 9-11; RRB at 8-9. It has therefore waived any argument with respect to these limitations.

The evidence shows that these limitations are met. CX-1628C-NCT-PSC (Kymissis) at Q/As 125-126, 194-195, 256-257, 336-337. Accordingly, I find that the [redacted] products meet limitations 1[f] and 1[g].

**iii) Limitation 1[h]**

Limitation 1[h] recites "wherein one of the second lines passes through centers of the second pixels and the third pixels in a corresponding one of the second sets and passes between the first pixels in corresponding adjacent ones of the first sets." JX-0005 at 1[h].

Complainant asserts that "[redacted] have the required 'second line' passing through the pixel centers in one of the second sets." CIB at 30. Complainant argues [redacted]. *Id.* Complainant further argues that [redacted] infringes under the doctrine of equivalents. *Id.*

BOE asserts that Complainant "relied on linear regressions to approximate a line that would pass near, not through, the claimed pixels' centers." RIB at 9. BOE also argues that the [redacted] products "[redacted] *Id.* With respect to the doctrine of equivalents, BOE argues that Complainant

"[redacted]." *Id.*[24]

Staff asserts that "BOE's criticisms of Dr. Kymissis' methodology should be rejected." SIB at 30. Accordingly, Staff believes that Complainant has shown that the Accused Products satisfy limitation 1[h]. *Id.*

I find that the Accused Products infringe this limitation. As Dr. Kymissis explained for the [redacted] product, he "[redacted]." CX-1628C-NCT-PSC (Kymissis) at Q/A 127. Dr. Kymissis referenced CDX-00015C.37 and noted that, in this image the "[redacted]." *Id.*

[24] BOE argues that Complainant's explanation for how this limitation is met is conclusory. RRB at 5. I disagree. To establish infringement, Complainant needed to show that the second line passes through the pixel centers of the second set. For its affirmative case, Complainant [redacted] CIB at 30. Thus, Complainant presented a complete argument. Given that this limitation is not particularly complex, no further explanation was necessary and it was appropriate for Complainant to cite to Dr. Kymissis' testimony for the supporting details.

CDX-0015C.37. Dr. Kymissis then explained that ." CX-1628C-NCT-PSC (Kymissis) at Q/A 127. He also confirmed this conclusion by using the " *Id.*; *see also id.* at Q/A 196, 258, 338.

I am not persuaded by BOE's noninfringement arguments. BOE first argues that "SDC relied on linear regressions to approximate a line that would pass near, not through, the claimed pixels' centers." RIB at 9. Dr. Kymissis explained, however, that he CX-1628C-NCT-PSC (Kymissis) at Q/A 688. He stated: *Id.* Dr. Kymissis also noted: *Id.* Thus, I am persuaded that the evidence shows that this limitation is met.

Nor am I persuaded by BOE's arguments that the [redacted] products (collectively, "[redacted]." RIB at 9. The annotated teardown image for the [redacted] product is shown below:

[redacted]

CDX-0018C.6. Dr. Kymissis explained that the [redacted] CX-1628C-NCT-PSC (Kymissis) at Q/A 338. He noted that [redacted] *Id.* As with the [redacted] he confirmed this analysis by using the GDS data. *Id.* That data showed that [redacted] *Id.* Thus, to the extent that [redacted] *Id.* Additionally, Dr. Kymissis testified that a [redacted]

[redacted] Tr. (Kymissis) at 155:18-24. I find this explanation to be sufficient for Complainant to meet its burden.

BOE also asserts that [redacted]). RRB at 8 (citing CX-3907C.8). Dr. Kymissis notes, however, that this data shows that [redacted]." CX-1628C-NCT-PSC (Kymissis) at Q/A 338; *see also id.* at Q/ 688 (explaining that the [redacted].[25] BOE does not argue that this conclusion is wrong. Instead, BOE once again attempts to disregard the manufacturing tolerances.

Accordingly, I find that the [redacted] products meet limitation 1[h].

**iv) Limitation 1[i]**

Limitation 1[i] recites "wherein the first lines and the second lines are alternately arranged." JX-0005 at cl. 1. BOE does not dispute that the [redacted] products meet this limitation. Undisputed Claim Limitations at 12-13. The evidence shows that this limitation is met. CX-1628C-NCT-PCS (Kymissis) at Q/A 128, 197, 259, 340.

**v) Limitations 1[j] and 1[k]**

Limitations 1[j] and 1[k] recite "wherein the first pixels are also arranged in third sets extending along a second direction that is perpendicular to the first direction to form respective third lines" and "wherein the second pixels and the third pixels are also alternately arranged in fourth sets extending along the second direction to form respective fourth lines that are parallel to the third lines." JX-0005 at cl. 1.

---

[25] Dr. Kymissis explains that distances expressed in "pixels" can be converted to microns. CX-1628C-NCT-PSC (Kymissis) at Q/A 70; *see also* CX-3429 (scaling chart to calculate distances).

Complainant asserts that "[redacted] meet these limitations, which relate to the arrangement of pixels in sets extending to form alternating lines." CIB at 27.

BOE does not address these limitations in its briefs. RIB at 9-11; RRB at 8-9. It has therefore waived any argument with respect to these limitations.

The evidence shows that these limitations are met. CX-1628-NCT-PSC (Kymissis) at Q/As 129-130, 198-199, 260-261, 341-342.

Accordingly, I find that the [redacted] products meet limitations 1[j] and 1[k].

**vi) Limitations 1[l] and 1[m]**

Limitations 1[l] and 1[m] recite "wherein the third lines and the fourth lines are alternately arranged" and "wherein the first pixels and either the second pixels or the third pixels are alternately arranged along a third direction, which crosses the first direction and the second direction." JX-0005 at cl. 1. BOE does not dispute that the [redacted] products meet these limitations. Undisputed Claim Limitations at 12-13. The evidence shows that these limitations are met. CX-1628C-NCT-PCS (Kymissis) at Q/As 131-132, 200-201, 262-263, 343-344.

**vii) Limitation 1[n]**

Limitation 1[n] recites "wherein a region having a width in the second direction that is equal to a width of the first pixels in the second direction, extending parallel to the first direction, and completely overlapping a row of the first pixels extending in the first direction, is entirely offset in the second direction from at least one of the second pixels or the third pixels in at least one of rows of the second pixels and the third pixels adjacent to the row of the first pixels." JX-0005 at cl. 1.

Complainant argues that [redacted] have the claimed 'region' required by this limitation." CIB at 30. Complainant explains that Dr. Kymissis's calculations are confirmed by both teardown data and GDS data. *Id.* at 31.

BOE does not address this limitation in its briefs. RIB at 9-11; RRB at 8-9. It has therefore waived any argument with respect to this limitation.

The evidence shows that this limitation is met. CX-1628-NCT-PSC (Kymissis) at Q/A 133, 202, 264, 345.

Accordingly, I find that the [redacted] products meet limitation 1[n].

**viii) Limitation 1[o]**

Limitation 1[o] recites "wherein a shortest distance between two nearest ones of the first pixels in one of the first sets is greater than a shortest distance between one of the second pixels and one of the third pixel that are nearest each other in one of the second sets." JX-0005 at cl. 1.

Complainant notes that "[redacted] CIB at 33.

BOE asserts that Complainant "relied on flawed methodologies to calculate the claimed shortest distance" and "thus, failed to prove [1-o]." RIB at 10.

Staff asserts that "BOE's criticisms of Dr. Kymissis' methodology should be rejected." SIB at 30. Accordingly, Staff believes that Complainant has shown that the Accused Products satisfy limitation 1[o]. *Id.* at 30-31.

As set forth above, I am not persuaded by BOE's criticism with respect to Dr. Kymissis' methodology. Additionally, the evidence shows that this limitation is met. For the [redacted] product, Dr. Kymissis explained:

CX-1629-NCT-PSC (Kymissis) at Q/A 134. Dr. Kymissis also performed calculations for both

He explained:

[redacted]

*Id.* Dr. Kymissis performed the same analysis for the [redacted] products. *See id.* at Q/As 203, 265, 346.

Accordingly, I find that the [redacted] products meet limitation 1[o].

**ix) Claim 5**

Claim 5 recites: "The pixel arrangement structure of claim 1, wherein a shortest distance between the first pixels and the second pixels, and a shortest distance between the first pixels and the third pixels, are a same first length." JX-0005 at cl. 5.

Complainant asserts that [redacted] CIB at 35.

BOE asserts that Complainant "fails to show the claimed 'same first length' distances are the 'same' – particularly for the [redacted] products." RIB at 10.

Staff asserts that "BOE's criticisms of Dr. Kymissis' methodology should be rejected." SIB at 30. Accordingly, Staff believes that Complainant has shown that the Accused Products satisfy claim 5. *Id.* at 30-31.

BOE's noninfringement argument with respect to the non-[redacted] products is the same as for limitation 1[o]. *See* RX-1084C-NCT (Pattison) at Q/A 219 (opining that claim 5 is not met for the same reasons as limitation 1[o]). For the reasons set forth above with respect to limitation 1[o], I am not persuaded by BOE's arguments. Additionally, the evidence shows that this limitation is met. CX-1628-NCT-PSC (Kymissis) at Q/A 135, 204, 266.

BOE also asserts that this claim is not met for the [redacted] products. RIB at 10. Dr. Pattison notes that [redacted] RX-1084C-NCT (Pattison) at Q/A 220. Dr. Kymissis performed the calculations, however, and concluded that [redacted] CX-1628C-NCT-PSC (Kymissis) at Q/A 347. Dr. Pattison does not assert that these measurements are inaccurate. RX-1084C-NCT (Pattison) at Q/A 220. It is not sufficient to simply assert that the measurements are impacted without data to support this opinion. As such, I find that the [redacted] product meets this limitation.

Accordingly, I find that the [redacted] products meet the additional limitation of claim 5.

**x) Conclusion**

For these reasons, I find that the [redacted] products infringe claim 5 of the '578 patent.

**b) Claim 10**

Claim 10 recites: "The pixel arrangement structure of claim 1, wherein each of the second pixels has a larger area than each of the third pixels." JX-0005 at cl. 10.

Complainant asserts that the additional limitation of claim 10 is met for the same reasons as discussed for claim limitation 1[f] of the '803 patent. CIB at 35.

Staff asserts that "BOE's criticisms of Dr. Kymissis' methodology should be rejected." SIB at 30. Accordingly, Staff believes that Complainant has shown that the Accused Products satisfy claim 10. *Id.* at 30-31.

BOE does not address the additional limitation of claim 10 in its briefs. RIB at 11-17; RRB at 9-11. It has therefore waived any argument with respect to this claim

The evidence shows that the additional limitation of claim 10 is met for the Accused Products. CX-1628-NCT-PSC (Kymissis) at Q/A 137, 206, 267, 349.

Accordingly, I find that the [redacted] products infringe claim 10.

**c) Claim 17**

Claim 17 recites: "The pixel arrangement structure of claim 1, wherein each of the first pixels has a smaller area than the second pixels and the third pixels." JX-0005 at cl. 17.

Complainant asserts that the additional limitation of claim 17 is met for the same reasons as discussed for claim limitation 1[f] of the '803 patent. CIB at 36.

Staff asserts that "BOE's criticisms of Dr. Kymissis' methodology should be rejected." SIB at 30. Accordingly, Staff believes that Complainant has shown that the Accused Products satisfy claim 17. *Id.* at 30-31.

BOE does not address the additional limitation of claim 17 in its briefs. RIB at 11-17; RRB at 9-11. It has therefore waived any argument with respect to this claim

The evidence shows that the additional limitation of claim 17 is met for the Accused Products. CX-1628-NCT-PSC (Kymissis) at Q/As 139, 207, 350.

Accordingly, I find that the [redacted] products infringe claim 17.

**d) Claim 40**

**i) Limitation 40[a]**

Limitation 40[a] recites "wherein each of the first pixels has two elongated sides that are elongated in the third direction or a fourth direction crossing the third direction and different from the first and second directions, and two connection portions that connect the two elongated sides to each other at respective ends." JX-0005 at cl. 40.

Complainant asserts that Dr. Kymissis identified two elongated sides. CIB at 36. For the [redacted] product, Complainant explains that [redacted]

*Id.* (citing CX-1628C-NCT-PSC (Kymissis) Q/A 141). Complainant further asserts that [redacted] *Id.*

BOE argues that the Accused Products do not infringe [redacted]" RIB at 10.

Staff states that Complainant "identifies the green pixels in the Accused BOE Products as the claimed 'first pixel.'" SIB at 32. Staff notes that "[a]lthough [redacted] the beginning and ending points of the elongated sides appear reasonably clear." *Id.* Staff further notes that "[t]he elongated sides are defined by the third and fourth directions, such that the elongated sides stop and start at the point that the edge of the pixel no longer extends in the third or fourth direction." *Id.* Thus, Staff believes that the Accused Products satisfy 40[a] and 40[b]. *Id.*

I am not persuaded by BOE's argument that the pixels lack sides. According to Dr. Pattison, [redacted] RX-1084C-NCT (Pattison) at Q/A 228. He further stated: [redacted] *Id.* Dr. Kymissis' careful analysis proves otherwise. First, Dr. Kymissis annotated a teardown image to show the two elongated sides:

[redacted]

CX-1628C-NCT-PSC (Kymissis) at Q/A 141. He explained that [redacted] *Id.* He further stated that [redacted]

[redacted] *Id.* He noted: [redacted] *Id.*

Dr. Kymissis performed calculations to show that the sides are elongated. Specifically, he calculated [redacted] *Id.* He then

[redacted]

*Id.* Dr. Kymissis also [redacted]. *Id.* Finally, he performed similar analyses for the other products. *Id.* at Q/As 210, 270, and 353.

Accordingly, I find that the [redacted] products meet limitation 40[a].

**ii) Limitation 40[b]**

Limitation 40[b] recites "wherein at least one of the two connection portions has a length that is greater than a shortest distance between the two elongated sides." JX-0005 at cl. 40.

Complainant asserts that "each connection portion is not a straight line and thus, is longer than a shortest (straight line) distance between the two elongated sides." CIB at 39.

BOE asserts that Complainant [redacted] RIB at 10.

For the reasons set forth with respect to limitation 40[a], I disagree with BOE's noninfringement position. The evidence shows that this limitation is met. CX-1628C-NCT-PSC (Kymissis) at Q/As 142, 211, 271, and 354.

Accordingly, I find that the [redacted] products meet limitation 40[b].

**e) Claim 41**

Claim 41 recites: "The pixel arrangement structure of claim 1, wherein a shortest distance between two elongated sides of one of the first pixels is less than a shortest distance between the one of the first pixels and a nearest one of the second pixels in the third direction or a fourth direction crossing the third direction." JX-0005 at cl. 41.

Complainant argues that [redacted] CIB at 39.

[redacted]

*Id.* at 40. Complainant further asserts that [redacted] *Id.*

BOE does not address this limitation in its briefs. RIB at 11-17; RRB at 9-11. It has therefore waived any argument with respect to this limitation

The evidence shows that this limitation is met. CX-1628-NCT-PSC (Kymissis) at Q/As 212-213, 272-273, 355-356.

Accordingly, I find that the [redacted] products infringe claim 41.

**2. Redesigned Products**

**a) Claim 47**

Complainant asserts that NIA [redacted] infringe claim 47. CIB at 8. Claim 47 of the '578 patent depends on claim 45. JX-0005 at cls. 47. Thus, to establish that NIAs [redacted] meet the limitations of claim 47, Complainant must also establish that the limitations of claim 45 are met.

**i) Limitations 45[pre] – 45[e]**

Limitations 45[pre] through 45[e] recite: "A pixel arrangement structure of an organic light emitting diode (OLED) display, the pixel arrangement structure comprising: a plurality of first pixels, wherein the first pixels have a shape comprising edges; a plurality of second pixels; and a plurality of third pixels, wherein the OLED display comprises a pixel defining layer defining areas of the first pixels, the second pixels, and the third pixels, wherein the first pixels, the second pixels, and the third pixels are configured to emit different color lights." JX-0005 at cl. 45. BOE does not dispute that NIAs [redacted] meet these limitations. Undisputed Claim Limitations at 13.[26] The evidence shows that these limitations are met. CX-1628C-NCT-PCS (Kymissis) at Q/As 396, 400.

[26] The parties do not include limitation 40[a] on this list, but BOE does not address this limitation in its briefs. RIB at 10-11; RRB at 9.

### ii) Limitation 45[f]

Limitation 45[f] recites "wherein only one of the second pixels and the third pixels is included in a virtual quadrangle containing outer edges comprising some of the edges of a group of four neighboring ones of the plurality of first pixels, all portions of all others of the second pixels and the third pixels being outside of the virtual quadrangle." JX-0005 at cl. 45.

Complainant argues that BOE is incorrect that the [redacted]. CIB at 43. According to Complainant, [redacted] *Id*.

BOE asserts "[t]he claims and specification do not explain what 'comprising some of the edges' means, but the prosecution history confirms 'some of the edges' requires more than just a point." RIB at 10. BOE further argues that "the alleged virtual quadrangle" of [redacted] *Id.* at 11. [27]

Staff does not believe [redacted] satisfy this limitation. Staff explains: "[redacted] SIB at 34. State notes that "'[e]dges' are not single points on the perimeters of the green pixels, but a side or facet of the pixel." *Id.*

Dr. Kymissis identified [redacted]

[27] In its reply brief, BOE changes its argument and asserts that NIAs [redacted] lack a "virtual quadrangle containing [pixel's] outer edges." RRB at 9 (emphasis in original). According to BOE, [redacted] *Id.* BOE did not make this argument in its pre-hearing brief and it is therefore waived. *See* RPHB at 237-238.

[redacted] CX-1628fC-NCT-PSC (Kymissis) at Q/A 397. He further identified [redacted]. *Id.* at Q/A 378, 397.

[redacted]

CDX-0023C.13. As can be seen in the above image, [redacted]

The specification does not set forth whether a corner of a first pixel can satisfy the "outer edges comprising some of the edges of [the first pixels]" limitation. BOE asserts that "the prosecution history confirms 'some of the edges' requires more than just a point." RIB at 10. Specifically, BOE states: "During prosecution, SDC relied on 'Applicant-annotated' drawings – specifically, Figure 5 of the '578 Patent – showing virtual quadrangles 'containing each outer edge of a group of four neighboring ones of the plurality of first pixels' to traverse prior art." *Id.* at 10-11. BOE included the following images in its brief:

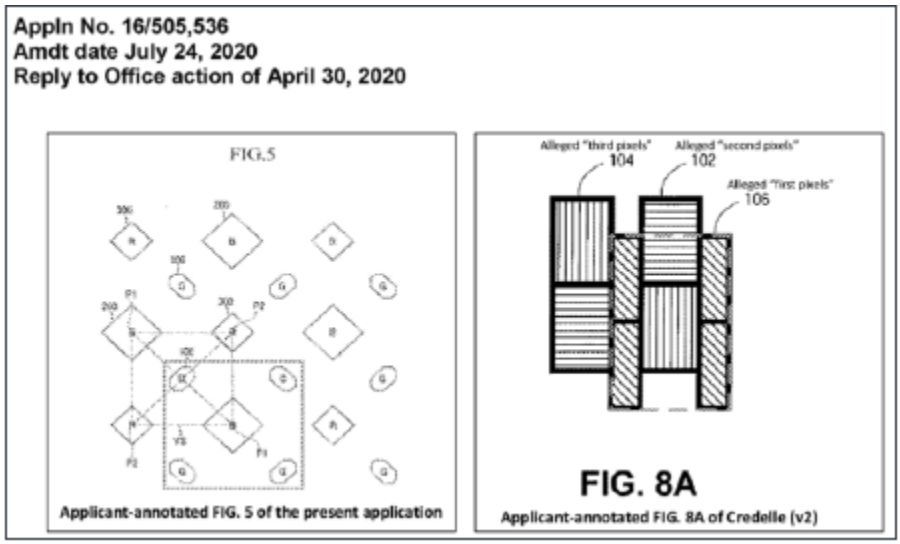


*Id.* at 11.[28] Staff also cites to the prosecution history in support of the statements that "[e]dges are not single points on the perimeter of the green pixels, but a side or facet of the pixel." SIB at 34 (citing JX.0010.678-.679; JX-00010.930-.931).

Neither BOE nor Staff cite to any statements in which the applicant indicated an intent for "edges" to specifically exclude an arrangement in which only the corners of the first pixels are within the outer edges of the virtual quadrangle. Neither cite to any discussion of corners in the context of the prior art that the applicant was intending to overcome. At most, the applicant's statements could be interpreted to mean that a single point is insufficient, but this is not the issue

[28] BOE also cites to an additional page of the prosecution history in support of its argument that "the prosecution history confirms 'some of the edges' requires more than just a point." RIB at 10 (citing JX-0010 at 1595. This page is the front page of a "Determination of Patent Term Adjustment under 35 U.S.C. 154(b." *Id.* BOE does not include a specific citation or explain how this portion of the history supports its argument. To the extent BOE was attempting to cite to the portion of the prosecution history shown in RDX-0013C.53 and cited by Dr. Pattison, that portion of the history shows that the applicant deleted the language "each outer edge of" and added "outer edges comprising some of the edges." RDX-0013C.53.

before me. Without any statement indicating a clear intent to exclude corners from the meaning of "some of the edges," I decline to read this exclusion into the claim.[29]

Staff also asserts that the prosecution history demonstrates that "'the edges' refers to entire 'edges' not portions of 'the edges.'" SRB at 6. Staff states that "to 'clarify the meaning' of limitation 45[f], the applicant 'provided an annotated version of Figure 5 showing a 'virtual quadrangle.'" *Id.*

[29] "[T]he doctrine of prosecution disclaimer ensures that claims are not 'construed one way in order to obtain their allowance and in a different way against accused infringers.'" *Aylus Networks, Inc. v. Apple Inc.*, 856 F.3d 1353, 1360 (Fed. Cir. 2017) (quoting *Southwall Techs., Inc. v. Cardinal IG Co.*, 54 F.3d 1570, 1576 (Fed. Cir. 1995)). However, such disavowals will be found only if they constitute clear and unmistakable surrenders of subject matter. *Conoco, Inc. v. Energy & Envtl. Int'l, L.C.*, 460 F.3d 1349, 1364 (Fed. Cir. 2006); *Pharmacia & Upjohn Co. v. Mylan Pharms., Inc.,* 170 F.3d 1373, 1376 (Fed. Cir. 1999); *Litton Sys., Inc. v. Honeywell Inc.,* 140 F.3d 1449, 1458 (Fed. Cir. 1998).

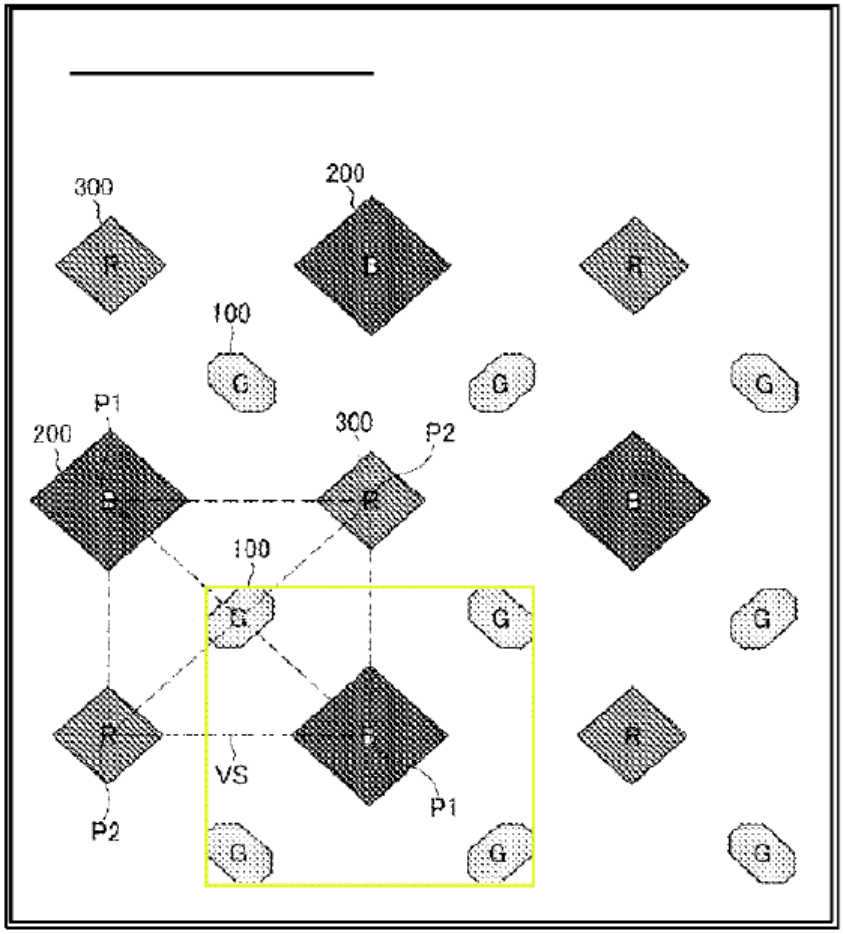


JX-0010.679 (annotated by Staff for clarity). Staff notes: "As illustrated by the applicant, the outer edges of the 'virtual quadrangle' do not merely intersect edges of the neighboring pixels, they overlap the entire facets of the pixels." *Id.* at 7. I do not find that this history clearly shows that corners cannot constitute edges. While the applicant provided an example of a virtual quadrangle that meets the claims, there is no evidence that applicant intended to limit the claim scope to this example.

Staff also explains that the applicant annotated a figure of U.S. Pub. No. 2010/0045695 A1 (Elliott) to show that the limitation was not met because the virtual quadrangle contained both a second pixel (horizontal hatching) and a portion a third pixel (vertical hatching):

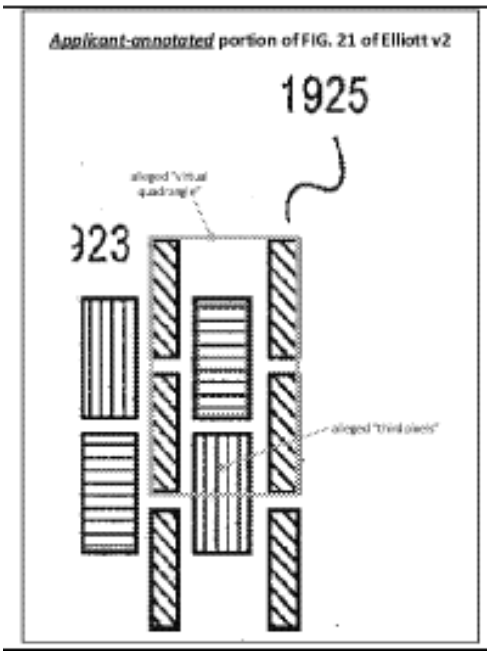


JX-0010.931. Staff notes that the applicant drew "'an alleged virtual quadrangle' having outer edges that overlap entire edges of the neighboring pixels." SRB at 8. According to Staff, "[u]nder SDC's current interpretation of the claim language, the applicant would not have been able to argue that the prior-art reference did not disclose the virtual quadrangle required under limitation 45[f]." *Id.* at 9. Staff states: "As shown below, under SDC's interpretation of the claim language, which is satisfied if the outer edges of the virtual quadrangle intersect edges of the neighboring pixels, the prior-art reference discloses a virtual quadrangle that encompasses only the second pixel (horizontal hatching), with all portions of all other second pixels (horizontal hatching) and third pixels (vertical hatching) being outside the virtual quadrangle." *Id.*

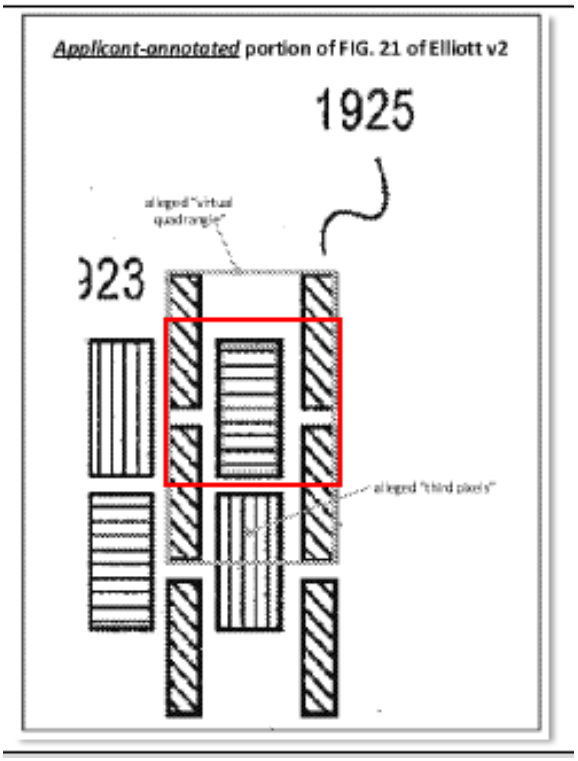


*Id.* at 10 (annotating JX-0010.931). Once again, the applicant did not specifically address whether the intersection of the outer edges of the virtual quadrangle with the corner of the first pixels satisfies the claim. I therefore do not interpret this statement as evidence that Complainant's understanding of the claims here is inconsistent with the prosecution record.

The evidence shows that one of skill in the art would understand "edges" to include corners. Dr. Kymissis opined that the pixel arrangement of NIA [redacted] met this limitation. CX-1628C-NCT-PSC (Kymissis) at Q/A 397. Dr. Pattison also agreed that "edges" include corners. In a declaration submitted in an IPR proceeding, Dr. Pattinson asserted that a virtual quadrangle touching corners met the limitation. Tr. (Pattinson) at 265:22-266: ("Q: So just to be clear, you've told the Patent Office in your sworn IPR declaration that touching even just corners of first pixels is enough to meet the requirements of the 'some of the edges' of the virtual quadrangle, correct? A: Yes.").

Accordingly, I find that Complainant has met its burden to show that NIAs [redacted] meet limitation 45[f].

**iii) Limitation 45[g]**

Limitation 45[g] recites "wherein a shortest distance between any two of the group of four neighboring ones of the plurality of first pixels is greater than a shortest distance between the only one of the second pixels and the third pixels included in the virtual quadrangle and a nearest one of the second pixels or the third pixels in a direction perpendicular to any side of the virtual quadrangle." JX-0005 at cl. 45.

Complainant argues that "Dr. Kymissis confirmed that the first shortest distance is greater than the second shortest distance." CIB at 44.

BOE argues that Complainant [redacted] RIB at 11. BOE states that [redacted] *Id.* In support of this argument, BOE cites to Dr. Pattison.[30]

Dr. Pattinson asserts that [redacted] RX-1084C-NCT (Pattison) at Q/A 256. According to Dr. Pattison, [redacted] *Id.* at Q/A 257. As Complainant notes, however, [redacted]

[30] Staff does not address this limitation. *See* SIB at 32-34.

[redacted] CRB at 13. Dr. Kymissis identified the [redacted] CX-1628-NCT-PSC (Kymissis) at Q/A 398; *see also id.* at Q/A 373-375, 400-401 ([redacted] Thus, the evidence demonstrated that this limitation is met.

Accordingly, I find that NIAs [redacted] meet the limitations of claim 45.

**b) Claim 47**

Claim 47 recites: "The pixel arrangement structure of claim 45, wherein the virtual quadrangle does not cross any other of the first pixels, the second pixels, or the third pixels." JX-0005 at cl. 47.

Complainant explains that, in NIA [redacted] "the other pixels (besides G2, G3, G5, G6, and B4) are entirely outside the virtual quadrangle." CIB at 44.

BOE does not address the additional limitation of claim 47 in its briefs. RIB at 10-11; RRB at 9. It has therefore waived any argument with respect to this claim.

The evidence shows that the additional limitation of claim 47 is met. CX-1628C-NCT-PSC (Kymissis) at Q/A 398, 400.

Accordingly, I find that NIA [redacted] meet the additional limitation of claim 47.

**c) Conclusion**

For the reasons set forth above, I find that NIAs [redacted] infringe claim 47.

**3. BLF Accused Products**

The BLF Respondents stipulated that Injured Gadgets IPXS-AS-FX5 is representative of all of the other BLF Accused Products. BLF Representative Products Stipulation at 3. The BLF Respondents also stated that they do not contest infringement of any of the asserted claims. BLF

Undisputed Limitations at ¶ 3 ("The BLF Respondents dispute no claim limitation of the Asserted Claims with respect to infringement."). The evidence in the record shows that the BLF Accused Products infringe claims 5, 10, 17, 40, and 41 of the '578 patent. CX-1628C-NCT-PSC (Kymissis) at Q/As 402-405, 440-465. Accordingly, I find that the BLF Accused Products infringe claims 5, 10, 17, 40, and 41 of the '578 patent.

#### 4. Defaulting Respondents' Accused Products

Complainant has shown that the Defaulting Respondents' Accused Products meet the limitations of claims 5, 10, 17, 40, and 41 of the '578 patent. CX-1628C-NCT-PSC (Kymissis) at Q/A 518-573. Accordingly, I find that the Defaulting Respondents' Accused Products infringe 5, 10, 17, 40, and 41 of the '578 patent.

#### 5. Conclusion

As set forth above, I find that the [redacted] and [redacted] products, BLF Accused Products, and the Defaulting Respondents' Accused Products infringe claims 5, 10, 17, 40, and 41 of the '578 patent. Because [redacted] is representative of [redacted] and [redacted] is representative of [redacted] and [redacted] I find that [redacted] also infringe claims 5, 10, 17, 40, and 41. I further find that the [redacted] infringes claims 5, 10, 17, and 40, and the [redacted] infringes claims 5, 10, 40, and 41. Because the [redacted] is representative of the [redacted] I find that the [redacted] also infringes claims 5, 10, 40, and 41. Finally, I find that NIAs [redacted] infringe claim 47.

### C. Technical Prong

Complainant asserts that the [redacted] practice claims 5, 10, 17, 40, and 41 and that the [redacted] practices claims 10 and 17. CIB at 52. The parties agreed that these [redacted] products are each representative of other products, as shown below:

| The '803, '683, and '578 Patents | | |
|---|---|---|
| Group | Products[3] | Representative Product |
| [redacted] | | |

Representative Products Stipulation at 4-5.

Staff agrees that Complainant has demonstrated that the Domestic Industry products practice the asserted claims. SIB at 38. Staff argues that BOE's criticisms regarding Dr. Kymissis' methodology should be rejected. *Id*. Staff also contends that I should reject BOE's argument with respect to limitations 40[a] and [b]. *Id.* at 39.

BOE includes a one paragraph argument as to why it disagrees that the technical prong is met for both the '803 and '578 patents. RIB at 17. For the '578 patent, BOE reiterates its argument

that Complainant "did not meet its burden to prove DI because Dr. Kymissis' methodology for calculating the center points and [redacted] was flawed and inconsistent." RIB at 17. For the reasons set forth in Section IV.C., I reject this argument.

Next, BOE argues that Complainant "failed to demonstrate the DI Products' non-polygonal shaped pixels meet claim 40 of the '578 patent" and that "[f]or claims 40 and 41" Complainant "failed to show clear points from which to determine where the pixels' sides start or stop." *Id.* Even if BOE was correct that Complainant did not show that the products practice the limitations of claims 40 and 41, Complainant has demonstrated that it meets the technical prong. Aside from the methodology argument addressed above, BOE does not make any argument specific to claims 5, 10, or 17. *See* RIB at 17; RRB at 11. Further, the evidence shows that the [redacted] practice claims 5, 10, and 17 of the '578 patent and that the [redacted] practices claims 10 and 17. CX-1628-NCT-PSC (Kymissis) at Q/A 628-646, 661-675, 678-681. As noted above, a complainant need only show that its products practice one claim for the technical requirement to be met. Thus, it is unnecessary for Complainant to establish that its products practice additional claims.

For these reasons, I find that the technical prong is met for the '578 patent.

**D. Invalidity**

BOE asserts that the '578 patent is invalid because: (1) Matthies and Yamada render claims 5, 10, 17, and 41[31] obvious (RIB at 17-25); (2) Matthies, Yamada, and U.S. Patent Pub. No. 2011/0234550 ("Hong") render claims 40, 45, and 47 obvious (*id.* at 25-29); (3) there is

[31] Both Complainant and Staff address whether this combination renders claims 45 and 47 obvious, but BOE does not address these claims in its briefs. RIB at 17-23.

insufficient written description for "sizes," "pixel arrangements," "spacing" and "orientations" (*id.* at 30-32) and (4) the "first"/ "second"/ "third"/"fourth" directions are indefinite (*id.* at 32-34).

**1. Matthies/Yamada**

BOE asserts that the combination of Matthies and Yamada renders the asserted claims obvious. RIB at 17. BOE also argues that "[a] POSITA would have been motivated, and have a reasonable expectation of success, to apply Yamada's teachings to Matthies." RIB at 23.

Complainant asserts that one of skill "would not have been motivated to combine Matthies' tiled PMOLEDs with Yamada's purported teachings regarding AMOLEDs with reasonable expectation of success." CIB at 71. Complainant also asserts that the combination fails to teach the "pixel defining layer" of limitations 1[d] and 45[d], the "region" and "shortest distance" of limitations 1[n] and 1[o], that "one of the second lines passes through centers of the second pixels and third pixels" of limitation 1[h], and fails to teach the additional limitations of claims 5 and 41. CIB at 71-75.

Staff agrees with Complainant that BOE have not shown that one of skill would have been motivated to modify Matthies in view of Yamada. SIB at 51.

For the reasons set forth in Section IV.D.3, BOE has not shown that one of skill would be motivated to combine Matthies and Yamada. Accordingly, I find that Matthies with Yamada does not render claims 5, 10, 17, and 41 obvious.

**2. Matthies/Yamada/Hong**

**a) Claim 40**

Claim 40 recites: "The pixel arrangement structure of claim 1, wherein each of the first pixels has two elongated sides that are elongated in the third direction or a fourth direction crossing the third direction and different from the first and second directions, and two connection portions

that connect the two elongated sides to each other at respective ends, and wherein at least one of the two connection portions has a length that is greater than a shortest distance between the two elongated sides." JX-0005 at cl. 40.

For this claim, BOE states: "Hong teaches claim 40's elongated shapes and shapes with truncated corners." RIB at 25. It further states: "Matthies/Yamada/Hong results in pixel arrangements that meet claim 40." *Id.* at 26. While BOE includes images in its brief, it does not provide a written explanation to show how the limitations of claim 40 are met.

At the conclusion of the evidentiary hearing, I warned the parties that "they should not attempt to simply cut all their arguments to the point where they become conclusory or have no detail." Tr. at 1129:8-10. I further noted: "Any arguments that do get cut, to the point where they are conclusory or lack any detail, will be deemed waived under Ground Rule 14.2, unless they relate only to undisputed limitations." *Id.* at 1129:13-16.

I find that BOE has waived the argument that this combination renders claim 40 obvious pursuant to Ground Rule 14.2. While I realize that these limitations are not particularly complex and that images do provide useful information, it is simply a step too far to merely state a conclusion that a limitation is met without *any* explanation as to how. *See, e.g.*, *SmithKline Beecham Corp. v. Apotex Corp.,* 439 F.3d 1312 (Fed Cir 2006) (citing *United States v. Dunkel,* 927 F.2d 955, 956 (7th Cir.1991) ("A skeletal 'argument,' really nothing more than an assertion, does not preserve a claim.... Especially not when the brief presents a passel of other arguments.... Judges are not like pigs, hunting for truffles buried in briefs.")

I therefore find that BOE has not shown, by clear and convincing evidence, that Matthies, Yamada, and Hong render claim 40 obvious.[32]

**b) Claims 45 and 47**

Complainant disputes that limitations 45[f], 45[g], and claim 47 are met by this combination. *See also* CIB at 78-79 (arguing that the limitations of 45[f], 45[g], and 47 are not obvious, as BOE has "not identified any teaching of a 'virtual quadrangle' or the 'shortest distance' limitation in the prior art").

As with claim 40, BOE simply states that the combination teaches the limitations and includes an image. RIB at 26, 27 ("Matthies/Yamada/Hong teaches 45[f]" and "Matthies/Yamada/Hong teaches 45[g]"). For the reasons set forth above, I find that BOE has waived its arguments pursuant to Ground Rule 14.2.

**3. Secondary Considerations**

Secondary considerations of nonobviousness may rebut a prima facie case of obviousness. Here, where BOE has not made out a prima facie case of obviousness, there is no showing to rebut. Accordingly, I need not consider any secondary considerations of nonobviousness.

**4. Written Description**

BOE asserts two written description arguments. First, BOE argues that "[n]othing in the '578 specification shows the inventor contemplated a 'region' with the negative limitation that it be "entirely offset' from second/third pixels." RIB at 30. According to BOE, "[t]he applicant tacitly conceded the specification fails to disclose this limitation by submitting new figures with

[32] Even if I had not found that BOE waived its arguments, I would find that it does not meet its burden to show that the combination renders claim 40 obvious. Complainant sets forth various reasons why this combination fails to disclose claim 40, which BOE does not sufficiently address. *See* CIB at 76-78; CRB at 21.

previously unseen annotations, which are not part of the specification." *Id.* at 31. Second, BOE argues that nothing in the specification shows a virtual quadrangle with a second or third pixel situation within its borders and "all portions of all others . . . being outside" the borders. *Id.* As with the previous argument, BOE asserts that "during prosecution the applicant submitted new figures with new annotations to explain the claims to the examiner." *Id.* at 32.

Complainant argues that these arguments were not raised in BOE's pre-hearing brief and are therefore waived pursuant to Ground Rule 11.2. CRB at 23. Complainant further notes that BOE's arguments "lack merit." *Id.* Complainant explains that "[w]ritten description must be evaluated from the perspective of POSITAs," yet, "Dr. Pattison offered no supporting testimony." *Id.*

Staff agrees that these arguments were not disclosed in BOE's prehearing brief and should therefore be deemed abandoned or withdrawn. SRB at 14.

BOE's pre-hearing brief contains only one paragraph with respect to written description:

> **(a) All "sizes," "pixel arrangements," "spacing," and "orientations" (All Claims)**
>
> As explained above, every claim recites pixel arrangements that include an endless variety of potential pixel sizes, arrangements, spacings, orientations, and densities (*i.e.*, aperture ratios). The thin specification fails to demonstrate the patentee possessed the full scope of the claimed inventions, including for example arrangements with aperture ratios up to and surpassing 80%. RX-0004C (Pattison), Q76. Therefore, the claims lack written description. *Ariad Pharms.*, 598 F.3d at 1351.

RPHB at 277. As can be seen in this paragraph, BOE did not make the arguments that it is now asserting regarding written description. I therefore find that BOE waived these arguments, pursuant to Ground Rule 11.2.

### 5. Indefiniteness

Claims 1 and 45 each require pixels arranged in "sets" extending along "first," "second," "third," and "fourth" directions. BOE asserts that "[a] claim may be invalid as indefinite when (1) different known methods exist for calculating a claimed parameter; (2) nothing in the record suggests using one method in particular, and (3) application of the different methods result in materially different outcomes for the claim's scope." RIB at 32 (quoting *Saso Golf, Inc. v. Nike, Inc.*, 843 F. App'x 291, 296 (Fed. Cir. 2021)). According to BOE, "[c]laims reciting the 'first direction" are indefinite because a given pixel arrangement could both infringe and not infringe depending on which direction is identified as the 'first' direction." *Id*. BOE notes that, "during prosecution, the Examiner identified anticipatory prior art RX-0185 (US2010/0045695 (Elliot))." *Id.* at 33. BOE explains that "[t]he patentee traversed Elliott by adding the now-claimed 'region . . . entirely offset' limitation and limiting the 'first direction' to horizontal so Elliott would not read on the new limitation." *Id.* BOE asserts that "if the 'first direction were vertical, Elliott discloses the claim, including the new 'region . . . entirely offset' limitation. *Id.*

Complainant argues that BOE mischaracterizes the prosecution history. CIB at 87. Complainant explains that "[t]he applicant was merely responding to the *examiner's* identification of horizontal as the first direction in a reference." *Id.* [33]

[33] Both Complainant and Staff's arguments appear to be directed to an assertion that the use of ordinal terms would render the claims indefinite because one of skill would not understand which term is first, which is second, etc. *See, e.g.*, CRB at 23 ("Both experts readily evaluated the Accused Products and prior art with no confusion regarding the claim's meaning of scope."). This is, however, different than the argument that BOE is making.

Staff "submits that [BOE has] failed to show that [this term] is indefinite." SIB at 52. Staff notes that "ordinals are commonly used in claim drafting to distinguish between repeated instances of the same element." *Id.* at 53.

BOE have not demonstrated, by clear and convincing evidence, that choosing one first direction over another will change the result in either an infringement or invalidity analysis. Dr. Pattinson referenced the following image from Elliott as an example of a situation in which an arrangement would infringe if one direction was considered first and not infringe if the other direction was considered first:

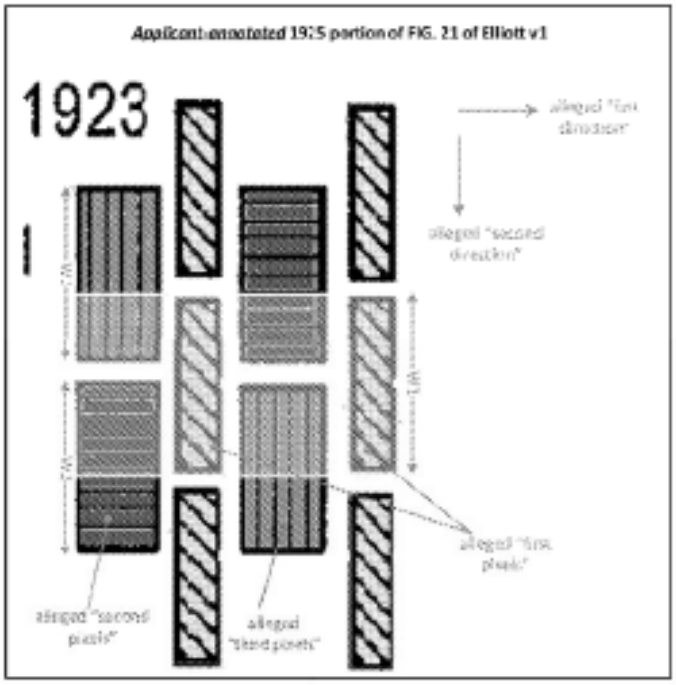


RDX-0004.6

RX-0004C (Pattinson) at Q/A 87. According to Dr. Pattison, "had the 'first' and 'second' direction been reversed, the claimed region would not overlap those second and third pixels." *Id.*at Q/A 87. Dr. Pattison does not provide support for this statement, however, or demonstrate that the other elements would be met if the first and second direction were reversed. *See* CX-1241C-NCT

(Kymissis) at Q/A 322 ("I note that Dr. Pattison does not show that all the other elements would have been . . . met if the directions had been 'reversed…'"). The clear and convincing evidentiary standard requires more than simply accepting an expert's word without any proof that his conclusion is accurate. Because the record is not clear that different methods would, in fact, result in different outcomes, I decline to find the claim invalid as indefinite.

## VI. U.S. PATENT NO, 7,414,599

### A. Overview

The '599 patent, entitled "Organic Light Emitting Device Pixel Circuit and Driving Method Therefor" issued on August 19, 2008 to Ho-Kyoon Chung; Yang-Wan Kim; Choon-Yul Oh; Oh-Kyong Kwon; and Sang-Moo Choi. JX-0001. The '599 patent is assigned to Samsung SDI Co., Ltd. *Id.* The patent discloses "a pixel circuit in an organic light emitting device capable of realizing high gradation by self-compensating a threshold voltage of a transistor that drives an electroluminescent (EL) element." JX-0001 at 1:14-21. The disclosed circuit has a threshold voltage compensation transistor (T33) connected to the gate and drain of the driving transistor (T31):

FIG. 3

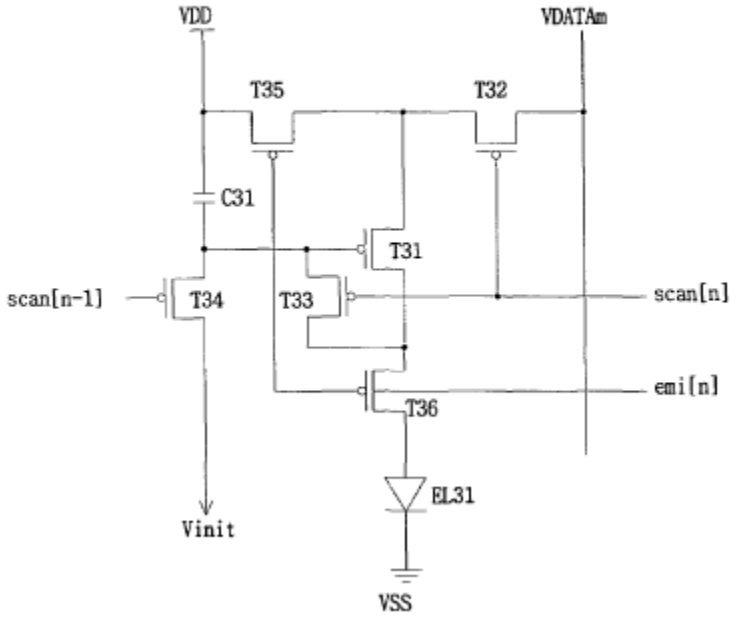


*Id.* at Fig. 3; 6:19-51.

### 1. Asserted Claims

Complainant asserts claims 2, 3, 13, 15, and 16 of the ’599 patent. CIB at 92, 110. Because several of the asserted claims depend on non-asserted claims, these non-asserted claims are also included below:

1. 1[pre] A pixel circuit in an organic light emitting device, comprising:

   1[a] a first transistor for delivering a data signal voltage in response to a current scan line signal;

   1[b] a second transistor for generating a driving current depending on the data signal voltage delivered through the first transistor;

   1[c] a third transistor for detecting and self-compensating threshold voltage deviation in the second transistor;

   1[d] a fifth transistor for providing a power supply voltage for the second transistor in response to a current light-emitting signal;

1[e] a sixth transistor which is coupled in series between the second transistor and an electroluminescent element and for providing the driving current for the electroluminescent element through the second transistor in response to the current light-emitting signal; and

1[f] a capacitor for storing the data signal voltage delivered to the second transistor,

1[g] wherein the electroluminescent element emitts [sic] light corresponding to the driving current generated through the second transistor.

2. The pixel circuit in the organic light emitting device of claim 1, further comprising: a fourth initialization transistor for discharging the data signal voltage stored in the capacitor in response to a scan signal just before the current scan signal.

3. The pixel circuit in the organic light emitting device of claim 1, wherein the first transistor is composed of a PMOS transistor including a gate to which the current scan line signal is applied, a source to which the data signal voltage is applied, and a drain coupled to the second transistor.

7. 7[pre] A pixel circuit in an organic light emitting device, comprising:

7[a] a first transistor for delivering a data signal voltage in response to a current scan line signal;

7[b] a second transistor for programming the data signal voltage and for generating a driving current in response to a programmed data signal when light is emitted;

7[c] a third transistor for providing the data signal voltage for the second transistor in response to the current scan signal;

7[d] a capacitor for maintaining the data signal voltage programmed onto the second transistor;

7[e] a fourth transistor for delivering a power supply voltage to the second transistor when the light is emitted;

7[f] a fifth transistor for delivering the driving current, provided from the second transistor, in response to the data signal voltage when the light is emitted; and

7[g] an electroluminescent element for emitting light corresponding to the driving current delivered through the fifth transistor,

7[h] wherein the third transistor connects the second transistor in the form of a diode in response to the current scan signal so that the second transistor detects and compensates its threshold voltage deviation in itself.

13. 13[a] The pixel circuit in the organic light emitting device of claim 7, wherein the fourth transistor is composed of a PMOS transistor including a gate to which the current light-emitting signal is applied, a source to which a power supply voltage is applied, and a drain coupled to the second transistor; and

    13[a] the fifth transistor is composed of a PMOS transistor including a gate to which the current light-emitting signal is applied, a source coupled to the second transistor, and a drain coupled to the electroluminescent element.

15. 15[pre] A pixel circuit in an organic light emitting device, comprising:

    15[a] a first transistor including a gate to which a current scan signal is applied, and a source to which a data signal voltage is applied;

    15[b] a second transistor whose source is coupled to a drain of the first transistor;

    15[c] a third transistor whose drain and source are connected between a gate and a drain of the second transistor;

    15[d] a fourth transistor including a gate to which a current light-emitting signal is applied, a source to which a power supply voltage is applied, and a drain coupled to the source of the second transistor;

    15[e] a fifth transistor including a gate to which the current light-emitting signal is applied, a source coupled to the drain of the second transistor, and a drain coupled to one terminal of an electroluminescent element;

    15[f] the electroluminescent element having the one terminal coupled to the drain of the fifth transistor and the other terminal grounded; and

    15[g] a capacitor in which one terminal of the capacitor is coupled to the gate of the second transistor and a power supply voltage is applied to the other terminal of the capacitor.

16. 16[a] The pixel circuit in the organic light emitting device of claim 15, further comprising: a sixth transistor including a gate to which a scan signal just before the current scan signal is applied;

    16[b] a source coupled to the one terminal of the capacitor; and

    16[c] a drain to which an initialization voltage is applied.

### 2. Claim Construction

I construed the following term from the asserted claims as follows:

| TERM | CLAIM(S) | CLAIM CONSTRUCTION |
|---|---|---|
| "current scan line signal"/ "current scan signal" | 1, 7 | Plain and ordinary meaning, i.e., "scan signal of the current scan line (i.e., SCAN[n])" |
| "current light-emitting signal" | 1, 15 | Plain and ordinary meaning, i.e., "light emitting signal of the current emission line (i.e., EMI[n])" |
| "fourth initialization transistor" / "sixth initialization transistor" | 2 | Fourth transistor, which is an initialization transistor<br><br>Sixth transistor, which is an initialization transistor |
| "scan signal just before the current scan signal" / "scan line just before the associated scan line" | 2, 16 | Plain and ordinary meaning, i.e.,<br><br>"scan signal of the immediately previous scan line (i.e., SCAN[n-1])"<br><br>"the immediately previous scan line (i.e., the (n-1)th scan line)" |
| "self-compensating threshold voltage deviation in the second transistor" (claim 1) / "the second transistor detects and compensates its threshold voltage deviation in itself" (claim 7) | 1, 7 | Plain and ordinary meaning, i.e., "eliminating or nearly eliminating the effect of a threshold voltage deviation of the particular second transistor" |
| "fifth transistor" | 1 | "a transistor that is not a first, second, third, or sixth transistor as defined in claim 1" |
| "sixth transistor" | 1 | "a transistor that is not a first, second, third, or fifth transistor as defined in claim" |
| "grounded" | 15 | "coupled to a reference voltage" |

Order No. 28 at 14, 43, 48. I also found that an additional generic transistor is implicit in claim 1. *Id.* at 43.

### 3. Level of Ordinary Skill in the Art

I previously found that a person of ordinary skill in the art with respect to the '599 patent would have had a relevant degree in Electrical Engineering, Computer Engineering, Materials Science, Physics, or the like, and experience in active matrix display design and electroluminescence. Order No. 28 at 13.

### B. Infringement

Complainant asserts the following with respect to infringement of the '599 patent:

| Accused Products | Claims Infringed |
|---|---|
| [redacted] | 2-3, 15-16 |
| [redacted] | 3, 15 |
| BLF Respondents' and Defaulting Respondents' Accused Products | 2-3, 13, 15-16 |

CIB at 92, 110, 111. Complainant further asserts that [redacted] *Id.* at 93.

As an initial matter, BOE asserts that Complainant cannot apply its analysis of the [redacted] products to the other products. RIB at 52. According to BOE, Complainant [redacted] *Id.* BOE explains that "[t]his [redacted] *Id.*

Complainant argues that [redacted] CIB at 97.[34]

I disagree with BOE that Complainant failed to analyze [redacted] Dr. Fontecchio testified that he "reviewed the

[34] BOE also asserts that Complainant waived its arguments with respect to the [redacted] products by failing to address them in its initial brief. RRB at 29. Complainant's initial brief does, however, set forth its affirmative case that the [redacted] CIB at 97. Complainant also addressed the alleged differences between each of the products. *Id.* at 93-97.

[redacted]" and that [redacted] CX-1629C-NCT (Fontecchio) at Q/A 88; *see also id.* at Q/A 85. He further testified that [redacted]. *Id.* at Q/A 94.

BOE claims that this testimony is insufficient. It asserts that Dr. Fontecchio's "conclusory" statements are wrong. RIB at 53. According to BOE, [redacted] *Id.*

[redacted]

CX-0194C.148; CX-0054C.43. BOE does not cite to any testimony in support of this attorney argument, however. Nor does it explain the differences between the two diagrams or comment on the significance of these differences. *See* RIB at 52-53; RRB at 29-30. Thus, there is no evidence in the record to contradict Dr. Fontecchio's testimony that, while [redacted] CX-1629C-NCT (Fontecchio) at Q/A 85. As such, I decline to find that Complainant failed to meet its burden to show that its analysis of the [redacted] products cannot apply to other products.

BOE also asserts that Dr. Fontecchio [redacted] RIB at 53. Dr. Fontecchio did admit that he did not have the timing diagram for [redacted] CX-

1629C-NCT (Fontecchio) at Q/A 85 ([redacted] It is unclear how the lack of this diagram impacts the infringement analysis, however. BOE generally asserts that [redacted] RIB at 52. BOE does not, however, assert that Complainant failed to establish that any particular limitation was met due to the lack of timing information. *See id.* at 52-53; RRB at 29-30. Additionally, Dr. Fontecchio testified [redacted] CX-1629C-NCT (Fontecchio) at Q/A 94. He also provided a specific explanation [redacted] *Id.* at Q/A 217-249 [redacted] For these reasons, I decline to find that the inability of Dr. Fontecchio to rely on the timing diagram meant that Complainant did not meet its burden.

**1. BOE Accused Products**

**a) Claims 2 and 3**

Claims 2 and 3 of the ’599 patent each depend on claim 1. JX-0001 at cls. 1-3. Thus, to establish that any Accused Product meets the limitations of claims 2 and 3, Complainant must also establish that the limitations of claim 1 are met.

**i) Limitation 1[pre], 1[a], 1[b], 1[d], 1[e], 1[f], and 1[g]**

Limitations 1[pre], 1[a], and 1[b] recite: “A pixel circuit in an organic light emitting device, comprising: a first transistor for delivering a data signal voltage in response to a current scan line signal; a second transistor for generating a driving current depending on the data signal voltage delivered through the first transistor.” JX-0001 at cl. 1. Limitations 1[d], 1[e], 1[f], and 1[g] further recite: “a fifth transistor for providing a power supply voltage for the second transistor in response

to a current light-emitting signal; a sixth transistor which is coupled in series between the second transistor and an electroluminescent element and for providing the driving current for the electroluminescent element through the second transistor in response to the current light-emitting signal; and a capacitor for storing the data signal voltage delivered to the second transistor, wherein the electroluminescent element emitts [sic] light corresponding to the driving current generated through the second transistor." JX-0001 at cl. 1.

BOE does not dispute that any of the Accused Products meet limitation 1[pre]. Undisputed Claim Limitations at 14. It further does not dispute that the [redacted] meet limitations 1[a], 1[b], and 1[d] through 1[g]. *Id.* Other than the argument regarding representativeness addressed above, BOE does not address these limitations with respect to the [redacted], [redacted] products and has therefore waived any such arguments. RIB at 42-55; RRB at 18-30. The evidence shows that these limitations are met. CX-1629C-NCT (Fontecchio) at Q/As 75-110, 115-122, 176--210, 217-227, 231-237.

**ii) Limitation 1[c]**

Limitation 1[c] recites "a third transistor for detecting and self-compensating threshold voltage deviation in the second transistor." JX-0001 at cl. 1. As noted above, the parties agreed that "self-compensating threshold voltage deviation in the second transistor" means "eliminating or nearly eliminating the effect of a threshold voltage deviation of the particular second transistor." Order No. 28 at 14.

Complainant asserts that "[e]ach BOE Accused Product has" the [redacted]. CIB at 98-99. According to Complainant, [redacted]

[redacted] *Id.* at 98. Complainant states that "[redacted] *Id.* Complainant further asserts that "BOE's documents describe" the structure of the Accused Products [redacted]" *Id.* at 99.

BOE argues that [redacted] RIB at 42. According to BOE, "[redacted] *Id.* BOE states that the [redacted]" *Id.* at 43. Instead, [redacted] *Id.* at 44. BOE also asserts that "[redacted] RRB at 19.

Staff argues that Complainant "has not shown that any accused product satisfies limitation 1[c]." SIB at 59. Staff notes that "[t]here is no expert testimony that the Accused Products satisfy the agreed upon construction for the 'self-compensating' . . . term[] of claim 1." *Id.* at 60.

I find that Complainant has not met its burden to show that the Accused Products meet limitation 1[c]. First, Dr. Fontecchio does not directly testify that the [redacted] He states that he applies the claim construction, but only uses the term "self-compensating" and does not use the terms "eliminating" or "nearly eliminating" in connection with his analysis. *See* CX-1629C-NCT (Fontecchio) at Q/A 68, 111-114, 158-161. While these are certainly not magic words that *must* be used to show infringement, the testimony must at least be clear that the claim term –

as construed (an agreed upon construction) – is met. Here, the testimony is not clear and I must therefore find that Complainant did not meet its burden. *See Cordis Corp. v. Boston Scientific Corp.*, 658 F.3d 1347, 1357-58 (Fed. Cir. 2011) ("BSC correctly argues that we must disregard the testimony of Cordis' expert that the NIR stent has two crests and a trough because . . . that testimony was based on an incorrect understanding of the claim construction."); *c.f.* also *NexStep, Inc. v. Comcast Cable Commc'ns, LLC*, No. 2022-1815, 2024 WL 4558613, at *13 (Fed. Cir. Oct. 24, 2024) ("While our precedent doesn't necessarily require an expert's testimony to be an *ipsis verbis* recitation of the claim, Dr. Selker's identified result is also too generalized, unclear, and unconnected to the claimed invention.").

Second, as Staff notes, Complainant does not appear to allege that the [redacted] *See* SRB at 17. Instead, Complainant argues that the [redacted] Thus, as Staff puts it: [redacted] SRB at 18.

Complainant does not resolve this question with evidence. In its brief, Complainant states: [redacted] CIB at 101. That is not the relevant inquiry. BOE does not appear to dispute that "nearly eliminating" is different from "eliminating" and that some deviation is allowed under the agreed-upon construction. Complainant does not, however, introduce evidence as to the benchmark one of skill would use for determining whether the threshold voltage deviation was "nearly eliminated." As Staff notes, "[t]here is no evidence of the viewpoint of a POSITA regarding the degree of reduction needed to constitute near elimination of the threshold voltage deviation." SRB at 18.

Instead, Complainant cites to simulation data from a [redacted] document that states that [redacted] CIB at 101 (citing RX-0141C.77). Dr. Fontecchio does not comment on the [redacted] or opine that it constitutes a near elimination of threshold voltage deviation. Without context in which to place this amount, it is not probative of whether or not the BOE products infringe.

Accordingly, I find that Complainant has not met its burden to show that limitation 1[c] is met by any of the Accused Products.

**iii) Claims 2 and 3**

Claims 2 and 3 depend on claim 1. Because I find that claim 1 is not met, claims 2 and 3 cannot be infringed. *See Muniauction Inc. v. Thomson Corp.*, 532 F.3d 1318, 1328-29 n.5 (Fed. Cir. 2008) ("A conclusion of noninfringement as to the independent claims requires a conclusion of noninfringement as to the dependent claims.")

**b) Claim 15**

**i) 15[pre]-15[e] and 15[g]**

Limitations 15[pre], 15[a], 15[b], 15[c], 15[d], and 15[e] recite: "A pixel circuit in an organic light emitting device, comprising: a first transistor including a gate to which a current scan signal is applied, and a source to which a data signal voltage is applied; a second transistor whose source is coupled to a drain of the first transistor; a third transistor whose drain and source are connected between a gate and a drain of the second transistor; a fourth transistor including a gate to which a current light-emitting signal is applied, a source to which a power supply voltage is applied, and a drain coupled to the source of the second transistor; a fifth transistor including a

gate to which the current light-emitting signal is applied, a source coupled to the drain of the second transistor, and a drain coupled to one terminal of an electroluminescent element." JX-0001 at cl. 15. Limitation 15[g] further recites: "a capacitor in which one terminal of the capacitor is coupled to the gate of the second transistor and a power 5 supply voltage is applied to the other terminal of the capacitor." *Id*.

BOE does not dispute that any of the Accused Products meet limitation 15[pre], 15[b], 15[c], or 15[g]. Undisputed Claim Limitations at 14. It further does not dispute that the [redacted] meet limitations 15[a], 15[d], or 15[e]. *Id.* Other than the argument regarding representativeness addressed above, BOE does not address these limitations with respect to the [redacted] and has therefore waived any such arguments. RIB at 42-55; RRB at 18-30. The evidence shows that these limitations are met. CX-1629C-NCT (Fontecchio) at Q/A 75-94, 139-145, 152, 176-195, 205-210, 217-222, 239-245, 249.

**ii) 15[f]**

Limitation 15[f] recites "the electroluminescent element having the one terminal coupled to the drain of the fifth transistor and the other terminal grounded." JX-0001 at cl. 15. As noted above, I construed "grounded" to have its plain and ordinary meaning, *i.e.*, "couped to a reference voltage."

Complainant asserts that [redacted] CIB at 107. Complainant notes that BOE's argument that [redacted] is incorrect as "[redacted]

[redacted] *Id.* at 108. Complainant also asserts that BOE's argument that [redacted] and, even if not waived, "is plainly wrong." CRB at 27; *see also* CIB at 108.

BOE argues that its products do not infringe [redacted] RIB at 45. BOE asserts that "[redacted] *d.* at 46. BOE also asserts that "[redacted] *Id.*

Staff believes that Complainant has shown that this limitation is satisfied. SIB at 62. Staff notes that Dr. Fontecchio opined that, even [redacted], it acts as a reference voltage. *Id.* Staff further argues that BOE has waived the argument [redacted] and that "even if the argument is considered on its merits, it fails." SRB at 20.

I find that the evidence shows that this limitation is met. With respect to the [redacted] Dr. Fontecchio testified that the "[redacted] CX-1629C-NCT (Fontecchio) at Q/A 146. He further explained that [redacted]" and [redacted] *Id.* He noted that [redacted]

[redacted]. at Q/A 148.

BOE makes several arguments for why there is no infringement of this limitation. First, BOE argues that the Accused Product's [redacted] RIB at 47-49. BOE also argues [redacted] *Id.* at 49. In its reply brief, BOE asserts that Complainant [redacted]." RRB at 23, 24. None of these arguments were included in BOE's pre-hearing brief. *See* RPHB at 34-35. Accordingly, they are waived pursuant to Ground Rule 11.2.[35]

Next, BOE argues that [redacted]. RIB at 50. According to BOE, Dr. Fontecchio [redacted]. *Id.* I disagree. Dr. Fontecchio explained in his testimony how this limitation was met and BOE has no expert testimony to rebut Dr. Fontecchio's opinion. CX-1629C-NCT (Fontecchio) at Q/A 146-148. Instead, BOE cites to the testimony of two of its employees. RIB at 50 (citing RX-1080C (Zhang) at Q/A 89-91; RX-1081C (Dong) at Q/A 29-30). While these employees both testified that BOE [redacted], I cannot simply accept testimony from BOE's witness on its face, without supporting evidence or further details.

Finally, BOE asserts that [redacted] RIB at 50. I am not persuaded by this argument. Dr. Fontecchio explained why [redacted]

[35] BOE's pre-hearing brief included less than two pages of arguments on whether the Accused Products contain a grounded EL element terminal.

CX-1629C-NCT (Fontecchio) at Q/A 175. BOE argues that this conclusion is supported with "erroneous assertions and insufficient evidence." RIB at 51. According to BOE, Dr. Fontecchio ." *Id.* During cross-examination, Dr. Fontecchio readily admitted that his testimony was not as precise as it should have been. He explained Tr. (Fontecchio) at 649:15-18. He then clarified that *Id.* at 651:4-10. With this clarification, I do not find that Dr. Fontecchio relied on the wrong period.

BOE also asserts that Dr. Fontecchio's RIB at 52. BOE states that *Id.* In support of this argument, BOE cites to the testimony of Mr. Zhang and the cross-examination of Dr. Fontecchio. Mr. Zhang did testify that RX-1080C (Zhang) at Q/A 90. As Complainant notes, however, Mr. Zhang never actually stated that CRB at 30. Nor did Mr. Zhang cite to any documents that confirmed his opinion. *Id.* Further, this uncorroborated testimony is contradicted by Mr. Zhang's deposition, in which he testified:

[redacted]

[redacted].

CX-1615C at 81:9-12.

Nor do I agree that Dr. Fontecchio's testimony support BOE's understanding. During cross-examination, Dr. Fontecchio was asked:

[redacted]

Tr. (Fontecchio) at 658:6-9. This testimony is not evidence that [redacted]

Because I do not agree with BOE's arguments, I find that Complainant has established that the [redacted] meet limitation 15[f].

**iii) Conclusion**

For these reasons, I find that the [redacted] products infringe claim 15 of the '599 patent.

**c) Claim 16**

Claim 16 recites: "The pixel circuit in the organic light emitting device of claim 15, further comprising: a sixth transistor including a gate to which a scan signal just before the current scan signal is applied; a source coupled to the one terminal of the capacitor; and a drain to which an initialization voltage is applied." JX-0001 at cl. 16.

BOE does not dispute that the [redacted] products meet the additional limitations of claim 16. Undisputed Claim Limitations at 14. The evidence shows that these limitations are met. CX-1629C-NCT (Fontecchio) at Q/As 75-94, 153-156, 176.

BOE further does not dispute that the [redacted] products meet limitations 16[b] and 16[c]. Undisputed Claim Limitations at 14. BOE does not address limitation 16[a] in its briefs with respect to these products and has therefore waived any such argument that this limitation is not met. Additionally, the evidence shows that these limitations are met. CX-1629C-NCT (Fontecchio) at Q/A 75-94, 177-191.

BOE does set forth noninfringement arguments with respect to [redacted]. Of relevance here, the parties agreed that "scan line just before the current scan signal" means "the immediately previous scan line (i.e., the (n-1)th scan line" and I adopted that construction. Order No. 28 at 14.

**i)** [redacted]

Complainant asserts that [redacted] meets limitation 16[a] under the doctrine of equivalents. CIB at 109 (stating that [redacted] infringes for the same reasons as discussed above for 2[a]); *see also id.* at 106. For its argument for how this limitation is met, Complainant states, in full:

[redacted]

*Id.* at 106.

BOE asserts that [redacted] does not meet this limitation. BOE explains that Complainant's infringement theory "is an end-run around of the claim construction requiring the 'immediately previous' signal." RIB at 53. BOE also argues that Complainant's argument "fails because [redacted] *Id.* at 54.

Staff argues that Complainant waived its argument that the [redacted] product meets claim 16 under the doctrine of equivalents. SRB at 22.

I find that Complainant has not met its burden to show that [redacted] meets the limitations of claim 16. As shown above, Complainant's doctrine of equivalents argument consists of two sentences and does not explain precisely how the limitation is met under the doctrine of equivalents. Complainant's argument therefore does not comply with Ground Rule 14.2. As such, I find that [redacted] does not infringe claim 16.

**ii)** [redacted]

Complainant asserts that [redacted] meets limitation 16[a] both literally and under the doctrine of equivalents. CIB at 109 (stating that [redacted] infringes for the same reasons as discussed above for 2[a]); *see also id.* at 105. For its argument for how this limitation is met, Complainant states, in full:

[redacted]

*Id.* at 105.

BOE argues that there is no literal infringement of claim 16 because [redacted]" RIB at 54. BOE asserts that Complainant's "DOE argument parallels its [redacted] DOE argument and fails for the same reason." *Id.*

Staff notes that "[a]lthough the [redacted]' SDC's expert, Dr. Fontecchio, opines that the timing diagram for the

[redacted]." SIB at 63. According to Staff, however, "Dr. Fontecchio's opinions regarding the [redacted] product are inconsistent with his opinions regarding the prior-art reference Sakamoto." *Id.* There, "Dr. Fontecchio acknowledges that the [redacted] *Id.* at 64. Staff also argues that Complainant waived its DOE arguments pursuant to Ground Rule 14.2. SRB at 22.

I first find that Complainant has not shown that [redacted] literally meets limitation 16[a]. To show that this limitation is met, Complainant must demonstrate that the product has "a sixth transistor including a gate to which [the immediately previous scan line (i.e., the (n-1)th scan line] is applied." Complainant acknowledges that, in [redacted] CIB at 105 (citing CX-1615C-PSC (Dong) at 96:4-7). Asserting that a product infringes because it is "equivalent" to a claim limitation is not literal infringement. *See, e.g.*, *Warner-Jenkinson Co.*, 520 U.S. at 21 (explaining that a product or process can infringe even when there is not literal infringement if "there is 'equivalence' between the elements of the accused product or process and the claimed elements of the patented invention"). As such, Complainant has not met its burden to show literal infringement.

Nor has Complainant met its burden to show that [redacted] meets claim limitation 16[a] under the doctrine of equivalents. As with [redacted] Complainant's argument here is too conclusory. *See* CIB at 106 (stating only that the difference between [redacted] and [redacted] is "unsubstantial," but failing to explain how [redacted] performs substantially the same function in substantially the same way to obtain the same result" as the patented invention).

As such, I find that Complainant has not shown that [redacted] infringes claim 16.

**2. Redesigned Products**

BOE asserts that [redacted] do not infringe the '599 patent. RIB at 54. BOE explains that "[a]ll asserted claims require two transistors act in response to the same 'circuit light-emitting signal," but "[redacted] *Id.* at 55. BOE further asserts that NIAs [redacted] do not infringe claims 2 and 16 [redacted]." *Id.*

Complainant does not introduce any evidence of infringement. As such, it has failed to meet its burden to show that NIAs [redacted] infringe the '599 patent. *See Spansion*, 629 F.3d at 1349 (holding that complainant bears the burden of proving infringement of the asserted patent claims by a preponderance of the evidence).

**3. BLF Accused Products**

The BLF Respondents stipulated that Wholesale Gadget Parts' WGP-AP03118 is representative of all of the other BLF Accused Products. Supplemental BLF Representative Products Stipulation at 3. The BLF Respondents also stated that they do not contest infringement of any of the asserted claims. BLF Undisputed Limitations at ¶ 3 ("The BLF Respondents dispute no claim limitation of the Asserted Claims with respect to infringement." ).

For the reasons set forth in section VI.B.1, however, I find that Complainant has not established that the BLF Accused Products meet the "self-compensating" limitation of 1[c]. As with the BOE Accused Products, Dr. Fontecchio does not directly testify that the third transistor detects and nearly eliminates the effect of a threshold voltage deviation of the particular second transistor. *See* CX-1629C-NCT (Fontecchio) at Q/As 267-268. As such, Complainant does not meet its burden to show that this limitation is met.

Likewise, claim 13 depends from claim 7, which also requires a third transistor connected to the second transistor "so that the second transistor detects and compensates its threshold voltage deviation in itself." JX-0001 at cl. 7. For the same reasons, I find that Complainant has not met its burden to show that this limitation is met.

The evidence in the record, however, shows that BLF Accused Products meet the limitations of claims 15 and 16 of the '599 patent. CX-1629C-NCT (Fontecchio) at Q/A 250- 260, 293-312. Accordingly, I find that the BLF Accused Products infringe claims 15 and 16 of the '599 patent.

#### 4. Defaulting Respondents' Accused Products

Complainant has shown that the Defaulting Respondents' Accused Products meet the limitations of claims 15 and 16 of the '599 patent. CX-1629C-NCT (Fontecchio) at Q/A 313-315.

For the same reasons as set forth above, I find that Complainant has not shown that the Defaulting Respondents' Accused Products meet claims 2, 3, or 13.[36]

Accordingly, I find that the Defaulting Respondents' Accused Products infringe claims 15 and 16 of the '599 patent.

#### 5. Conclusion

As set forth above, I find that the [redacted] products, BLF Accused Products, and the Defaulting Respondents' Accused Products infringe

[36] Commission Rule 210.16(c) provides "[t]he facts alleged in the complaint will be presumed to be true with respect to the defaulting respondent," but this is true only when a complainant seeks relief against a respondent, as opposed to a GEO. *See* 19 C.F.R. § 210.16(c); *see also* 19 U.S.C. § 1337(g)(1) (explaining that if "the complainant seeks relief limited solely to that person . . . the Commission shall presume the facts alleged in the complaint to be true.")

claims 15 and 16 of the ’599 patent. I further find that the [redacted] products infringe claim 15. Finally, I find that NIAs [redacted] do not infringe any asserted claim.

### C. Technical Prong

Complainant asserts that the [redacted] practice claims 2-3 and 15-16 and that the [redacted] practices claims 3 and 15. CIB at 112. The parties agreed that these four products are each representative of other products, as shown below:

[37] The parties refer to this product in different ways. *See, e.g.*, CIB at 112 [redacted] CX-1629C-NCT (Fontecchio) at Q/A 404 [redacted] Representative Product Stipulation [redacted]; RIB at xxiii [redacted] SIB at 12 [redacted] I will refer to the product as the [redacted]

[redacted]

Representative Products Stipulation at 5.

Staff agrees that Complainant has shown that the DI Products practice claims 15 and 16 but disagrees that the DI Products practice claims 2 or 3. SIB at 64.

BOE makes two arguments with respect to technical prong. One of BOE's arguments is that Complainant failed to show that all four representative products practice the claims. RIB at

56. BOE explains that Dr. Fontecchio analyzed only [redacted]

I do not agree with BOE's criticisms of Dr. Fontecchio's analysis. Dr. Fontecchio analyzed the evidence for each DI Product and explained why the differences between the products was immaterial. First, Dr. Fontecchio presented a claim-by-claim analysis as to how the [redacted] practices the asserted claims. CX-1629C-NCT (Fontecchio) at Q/A 334-386.[38] Next, Dr. Fontecchio explained how the pixel circuits of the other two product groups are nearly identical to the [redacted] pixel circuit. *Id.* at Q/A 395 (testifying that the pixel circuits of the [redacted] "are identical [to the [redacted] with the exception that the [redacted] pixel circuit has an additional initialization voltage source, as opposed to the single initialization source in the [redacted] pixel circuit"); *see also id.* at Q/A 404 ("[T]he [redacted] He also explained that both the [redacted] practice the asserted claims for the same reasons as with respect to the [redacted] product. *Id.* at Q/As 394, 404. As Complainant notes, BOE has not argued that this analysis is incorrect. Nor has it identified other differences between the products. *See* CIB at 112 (asserting that there is "no contrary evidence" that the [redacted] in a material way); CRB at 32 (noting that "BOE identifies no relevant differences" between the DI products and that "Dr. Fontecchio's analysis is unrebutted"). As such, I find that Complainant has shown that both the [redacted] practice the '599 patent.

[38] He also performed a claim-by-claim analysis with respect to the [redacted]. CX-1629C-NCT (Fontecchio) at Q/A 406-432.

BOE also asserts that Complainant "assumes its DI Products practice threshold-voltage compensation based entirely on the circuit structure" and "fail[s] to consider how [the circuit] operates." RIB at 55. BOE argues: "Because there is no evidence the capacitor charges for an adequate period, SDC does not - and cannot – prove the DI Products 'eliminat[e] or nearly eliminate[e]' threshold-voltage deviations." *Id.*

Even if BOE is correct that Complainant does not show that the products practice this limitation, Complainant has demonstrated that it meets the technical prong. BOE does not dispute that [redacted] practice claim 15 and that the [redacted] practices claim 16 and, as noted above, I reject BOE's argument with respect to the [redacted] *See* RIB at 55-56; RRB at 30. Further, the evidence shows that the [redacted] practice claim 15 and that the [redacted] practice claim 16. CX-1629C-NCT (Fontecchio) at Q/A 318-340, 374-393, 394-402, 403-405, 406, 424-440. As stated above, a complainant need only show that its products practice one claim for the technical requirement to be met. Thus, it is unnecessary for Complainant to establish that its products practice additional claims.

For these reasons, I find that the technical prong has been satisfied for the '599 patent.

**D. Invalidity**

BOE asserts that the '599 patent is invalid because: (1) U.S. Patent Pub. No. 2003/0132931 A1 ("Kimura") renders the asserted claims obvious (RIB at 59-68); (2) Kimura and U.S. Patent Pub. No. 2003/0067424 ("Akimoto") render the asserted claims obvious (*id.* at 68); (3) U.S. Patent Pub. No. 2004/0056257 A1 ("Sakamoto") renders the asserted claims obvious (*id.* at 68-72); (4) Sakamoto and Akimoto render the claims obvious (*id.* at 72); and (5) claims 15-16 are invalid for lack of written description and enablement. *Id.* at 72-73.

The opinions of BOE's primary invalidity expert, Dr. Daniel Foty, were stricken in a previous order. Order No. 60 (July 2, 2024).[39] While BOE introduced the testimony of another expert, Mr. Thomas Credelle, Mr. Credelle did not opine as to how the prior art references disclose each limitation of the asserted claims. *See generally* RX-0006C (Credelle). Due to the fact that Dr. Foty's testimony was struck, both Complainant and Staff assert that BOE cannot meet its burden to show invalidity. CIB at 119; SIB at 66.

**1. Kimura**

BOE argues that "Kimura renders all Asserted/DI Claims obvious." RIB at 59. According to BOE, Kimura expressly teaches "[r]eplacing nMOS switching transistors with pMOS." *Id.* at 60. BOE includes images for many of the limitations to show how each is disclosed by Kimura. *Id.* at 60, 61-67 BOE also argues that one of skill would be motivated "to make Kimura's pixel circuit all-pMOS" and that "[t]here was more than a reasonable likelihood of success in using an all-pMOS implementation." *Id.* at 60-61.

Complainant argues that Kimura does not disclose or suggest various claim limitations. CIB at 119, 120. According to Complainant, BOE's argument is primarily "based on Kimura's Figure 33 embodiment, which Kimura acknowledges is flawed." *Id.* at 119. Complainant further asserts that "POSITAs would not be motivated to make the significant modifications necessary to replace each PMOS transistor with an NMOS transistor, eliminating the circuit's CMOS character, ignoring relevant differences in those transistors, and contravening Kimura's teachings." *Id.* at 119-120. Complainant notes that BOE's argument "offers attorney assertions, without explanation

[39] This order was based on a motion *in limine* that Dr. Foty does not qualify as a person of ordinary skill in the art under the definition I adopted in Order No. 28. *See* Order No. 60 (July 2, 2024).

and improperly rel[ies] on Dr. Foty's demonstratives." CRB at 36. Complainant further states that BOE "fails to link Kimura's disclosures to the limitations." *Id.*

Staff argues that "Dr. Fontecchio's specific criticisms of [BOE's] invalidity arguments are unrebutted by a POSITA." SIB at 66. Staff explains that the only witness testimony that BOE cites is that of Mr. Credelle, who provided conclusory testimony that does "little more than stating that he agrees with the now-excluded opinions" of Dr. Foty. SRB at 23. Staff notes: "Without evidence of the perspective of a POSITA, Respondents have not met their burden of showing by clear and convincing evidence that the asserted claims would have been obvious." SIB at 66.

I find that BOE has failed to meet its burden to show that Kimura renders the asserted claims obvious. For many limitations, BOE provides only conclusory statements as to how Kimura discloses the limitation. For example, with respect to limitation 15[a], BOE states: "Kimura renders this obvious." RIB at 61. It then cites to the following images: [40]

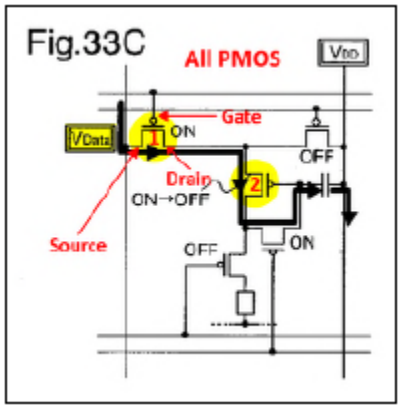


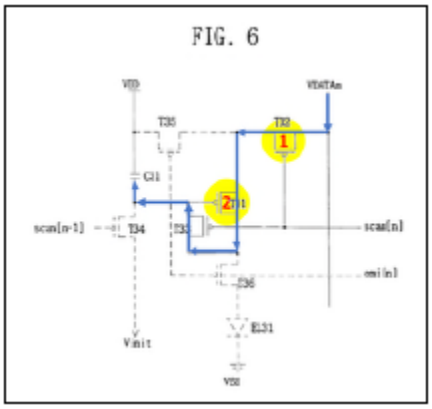


[40] As Complainant notes in its reply brief, these images include annotations in red and yellow. CRB at 34. These annotations are from demonstratives in Dr. Foty's testimony, which was struck. *Id.* Thus, even setting aside the other issues addressed in this section, it was improper for BOE to rely on the annotated version of these figures.

*Id.* at 62. BOE does not explain *how* the figures disclose the claim limitation. *Id.*; *see also id.* at 62-63 (providing similar conclusory testimony for limitations 15[b], 15[c], and 15[d]); *id.* at 68 (conclusory testimony for claims 2 and 3). Accordingly, BOE cannot meets its burden to show invalidity by clear and convincing evidence. *See e.g. Ecolochem, Inc. v. S. Cal. Edison Co.*, 227 F.3d 1361, 1372 (Fed. Cir. 2000) ("Broad conclusory statements regarding the teaching of [] references, standing alone, are not 'evidence.'"); *see also Certain Semiconductor Chips with Minimized Chip Package Size & Prods. Containing Same (III)*, Inv. 337-TA-630, Initial Determination, 2009 WL 3092628, at *82 (U.S.I.T.C. Aug. 28, 2009) ("The ALJ finds that, by simply making cursory assertions and conclusory arguments comprised of two paragraphs, Respondents have blatantly failed to meet the clear and convincing standard necessary to invalidate [the patent].").

Nor can BOE establish that one of skill would be motivated to modify Kimura. With respect to motivation, BOE provides a bulleted list of apparent reasons one of skill would modify the pixel circuit of Kimura:

> **Motivation to Modify**. There was additional motivation for a POSITA to make Kimura's pixel circuit all-pMOS:
>
> - "[A]ny polarity may be used" for switching transistors. RX-0083 ¶¶[0396], [0434], [0438], [0445], [0649].
> - Making the fifth transistor pMOS enables "higher speed." *Id.* ¶[0670].
> - pMOS devices in "close proximity" to the driving transistor "increase[s] the aperture ratio" and "reduce[s]… dispersion." *Id.* ¶[0432].
> - A POSITA's knowledge that single species is simpler and cheaper to manufacture. RX-0084, 12:30-49.
>
> There was more than a reasonable likelihood of success in using an all-pMOS implementation. RX-0006C (Credelle) Q24.

RIB at 60-61. Such conclusory statements are insufficient. *Acoustic Tech, Inc. v. Itron Networked Sols., Inc.*, 949 F.3d 1366, 1375 (Fed. Cir. 2020) (explaining that conclusory expert testimony and attorney argument cannot constitute substantial evidence of a motivation to combine"). Additionally, as seen above, BOE does not support its arguments regarding motivation with citations to expert testimony. In cases such as this one – where the technology is complex – such testimony is necessary for a party to meet its burden. *See, e.g.*, *Kinetic Concepts, Inc. v. Smith & Nephew, Inc.*, 688 F.3d 1342, at 1369-70 (Fed. Cir. 2012) ("Although expert testimony regarding motivation to combine is not always required, the technology at issue here is not the type of technology where common sense would provide the motivation to combine these references.").

As such, I find that BOE has not established that Kimura renders obvious the asserted claims of the '599 patent.

**2. Kimura/Akimoto**

BOE asserts that "Akimoto confirms and bolsters a POSITA's knowledge that nMOS/pMOS switching transistors are interchangeable." RIB at 68. BOE further asserts that "Akimoto's disclosure would have further motivated a POSITA to make Kimura's pixel circuits all-pMOS with a reasonable expectation of success." *Id.*

Complainant argues Kimura does not disclose or suggest various claim limitations and that "BOE did not cite Akimoto as disclosing any limitation." CIB at 120. Complainant further asserts that "POSITAs would not look to modify Kimura's pixel circuits based on Akimoto, whose circuits are materially different and incompatible with Kimura's, nor have a reasonable expectation of success." *Id.*

Staff asserts that BOE has failed to meet its burden for the same reasons as set forth above with respect to Kimura. SIB at 66.

I first find that BOE's argument is waived per Ground Rule 14.2. BOE includes only two sentences regarding this obviousness combination. A two-sentence argument cannot set forth BOE's complete obviousness argument "in detail."

Even if BOE had not waived its arguments, however, I would find that BOE cannot meet its burden to show that the '599 patent is invalid due to the combination of Kimura and Akimoto. BOE's two sentences on the issue do not address how the combination discloses all the limitations or why one of skill would be motivated to combine the references. RIB at 68. Nor does the cited testimony fill these gaps. In his witness statement, Mr. Credelle states that he "agree[s] with Dr. Foty's discussion of this combination, his conclusion that a POSITA would have been motivated to combine Kimura and Akimoto, and the other related issues he has discussed." RX-0006C (Credelle) at Q/A 25. Because Dr. Foty's testimony was struck, Mr. Credelle's reference of this testimony is not useful evidence.

Accordingly, I find that BOE has not established that Kimura and Akimoto render obvious the asserted claims of the '599 patent.

**3. Sakamoto**

BOE argues that "Sakamoto renders the Asserted/DI Claims obvious." RIB at 68. BOE asserts that Sakamoto expressly teaches "[r]eplacing nMOS switching transistors with pMOS." *Id.* BOE includes images for many of the limitations to show how each is disclosed by Sakamoto. *Id.* at 68-71.

Complainant argues that Sakamoto does not disclose or suggest various claim limitations. CIB at 120-121 (arguing that Sakamoto lacks a third transistor that meets the claim limitations and "does not teach or suggest the initialization transistor of claims 2 or 16"). Complainant further asserts that "POSITAs would not be motivated to eliminate the CMOS design of Sakamoto's

Figure 5B circuit nor make the significant modifications necessary to replace each PMOS transistor with an NMOS transistor, which disregards relevant differences in those transistors, benefits of CMOS, and Sakamoto's teachings." *Id.*

Staff asserts that BOE has failed to meet its burden for the same reasons as set forth above with respect to Kimura. SIB at 66.

BOE's analysis for this reference suffers from the same problems as Kimura. For limitations 15[a], 15[b], and 15[d], BOE simply states that Sakamoto renders the limitation obvious and includes an image. RIB at 69. For claims 2 and 3, BOE does even less. *Id.* at 72 (stating only that "Sakamoto discloses Claim 2's transistor" and "[t]he [15-a] and [15-b] analysis applies to Claim 3 because they are substantially identical."). As explained in Section VI.D.1, such an analysis is insufficient for BOE to meet its burden. It also constitutes waiver under my Ground Rules.

Additionally, certain of BOE's arguments rely on the testimony of Dr. Foty. *See* RIB at 70 ("As Dr. Foty would have testified, a POSITA would have found it obvious that the second terminal would be grounded to e.g., 0V."); *id.* at 71 ("As Dr. Foty would have testified, Sakamoto renders obvious a sixth transistor including a gate to which scan[n-1], i.e., Qj, is applied."). Because Dr. Foty's testimony was struck, BOE cannot rely on this testimony to meet its burden

I find that BOE has not established that Sakamoto renders obvious the asserted claims of the '599 patent.

#### 4. Sakamoto/Akimoto

BOE's entire argument with respect to this combination consists of one sentence: "Sakamoto in view of Akimoto renders obvious an all-pMOS configuration of Sakamoto's circuit.

§IV.C.2.b; RX-0006C (Credelle) Q27." RIB at 72; *see also* RRB at 30 (offering no further argument with respect to this combination).

Complainant argues that Sakamoto does not disclose or suggest various claim limitations and that "BOE did not argue Akimoto teaches or suggests any limitation." CIB at 120-121. Complainant further asserts that "POSITAs would not look to modify Sakamoto's circuits based on Akimoto, whose circuits are materially different and incompatible with Sakamoto's, nor have a reasonable expectation of success." *Id.*

Staff asserts that BOE has failed to meet its burden for the same reasons as set forth above with respect to Kimura. SIB at 66.

I first find that BOE's argument is waived per Ground Rule 14.2. A one sentence argument cannot set forth BOE's complete obviousness argument "in detail."

Even if BOE had not waived its arguments, however, I would find that BOE cannot meet its burden to show that the '599 is invalid due to the combination of Sakamoto and Akimoto. BOE's single sentence does not address how the combination discloses all the limitations or why one of skill would be motivated to combine the references. RIB at 72. Nor does the cited testimony fill these gaps. In his witness statement, Mr. Credelle states that he "agree[s] with Dr. Foty's discussion of this combination, his conclusion that a POSITA would have been motivated to combine Sakamoto and Akimoto, and the other related issues he has discussed." RX-0006C (Credelle) at Q/A 27. Because Dr. Foty's testimony was struck, BOE cannot rely on this testimony to meet its burden

As such, BOE has not shown that Sakamoto with Akimoto renders the asserted claims obvious.

### 5. Secondary Considerations

Secondary considerations of nonobviousness may rebut a prima facie case of obviousness. Here, where BOE has not made out a prima facie case of obviousness, there is no showing to rebut. Accordingly, I need not consider any secondary considerations of nonobviousness.

### 6. § 112

BOE's full § 112 argument as is follows:

> The ALJ construed "grounded' as "coupled to a reference voltage" but SDC interprets it to include coupling to a nonuniform and changing "reference voltage" through a 30-megaohm resistor. §IV.A.2 In view of SDC's interpretation of "grounded," Claims 15-16 are invalid because the specification (i) lacks adequate written-description support for its full scope and (ii) fails to enable its full scope. RX-0006C (Credelle) Q36.

RIB at 72-73; *see also* RRB at 30 (offering no further argument with respect to § 112).

Complainant argues that Dr. Fontecchio established that the '599 patent "provides adequate written description for, and enables, claims 15-16" and that "BOE presented no contrary evidence." CIB at 123; *see also* CRB at 38.

Staff notes that "[w]hether a patent complies with the written description and enablement requirements is viewed from the perspective of a POSITA." SIB at 67. Staff explains that the only evidence from the perspective of one of skill comes from Dr. Fontecchio "who testified that [the] specification supported the claims." *Id.* Staff further asserts that BOE's arguments "do not comply with the ground rules' requirement that contentions be set forth 'in detail' and should be deemed abandoned or withdrawn." SRB at 25.

I find that BOE's argument is too conclusory under my Ground Rules. Again, BOE offers only two sentences which fail to set forth any detail at all with respect to its arguments. Accordingly, BOE has waived the argument that the '599 patent is invalid under 35 U.S.C. § 112.

Additionally, BOE does not support its arguments with the testimony of one of skill in the art. BOE cites to Q/A 36 of Mr. Credelle's witness statement, but, in this testimony, Mr. Credelle simply notes that he agrees with Dr. Foty's opinion. RX-0006C (Credelle) at Q/A 36 ("I agree with Dr. Foty's discussions on the topic . . . both because the specification lacks adequate written description support for the full scope of the claims and because the specification fails to enable the full scope of the claims…"). As noted above, Dr. Foty's testimony was struck. The record therefore does not include the testimony with which Mr. Credelle apparently agrees and Mr. Credelle's testimony is of little value. Because the question of whether a patent complies with the written description and enablement requirements is viewed from the perspective of one of skill, the failure to cite to such evidence means that BOE cannot meet its burden. *See Ariad*, 598 F.3d at 1351.

Accordingly, BOE has not shown that claims 15 and 16 of the '599 patent are invalid under 35 U.S.C. § 112.

## VII. U.S. PATENT NO. 9,330,593

### A. Overview

The '593 patent, entitled "Stage Circuit and Organic Light Emitting Display Using the Same" issued on May 3, 2016 to Hwan-Soo Jang. JX-0002. The '593 patent is assigned to Complainant. *Id.* The '593 patent generally relates to "stage circuit structures that . . . have a reduced number of transistors and can output scan signals based on first and second clock signals and the output signal of a previous stage circuit." Am Comp. at ¶ 83.

#### 1. Asserted Claims

Complainant asserts claim 6 of the '593 patent. CIB at 124, 138. Because claim 6 depends on claims 1 and 2, these non-asserted claims are also included below:

1. 1[pre] A stage circuit having a first input terminal, a second input terminal, a third input terminal, and an output terminal, the stage circuit comprising:

   1[a] an outputting unit having a first node and a second node, the outputting unit to supply a voltage of a first power supply to the output terminal according to a voltage applied to the first node and a signal of the third input terminal to the output terminal according to a voltage applied to the second node;

   1[b] a first driver to control the voltage of the second node in accordance with signals of the first input terminal, the second input terminal, and the third input terminal; and

   1[c] a second driver to control the voltage of the first node in accordance with the signal of the second input terminal and the voltage of the second node, wherein

   1[d] the signal of the third input terminal directly controls an on/off operation of a transistor, the transistor included in the first driver.

2. 2[a] The stage circuit as claimed in claim 1, wherein the first input terminal receives an output signal of a previous stage circuit or a start signal,

   2[b] wherein the second input terminal receives a first clock signal, and

   2[c] wherein the third input terminal receives a second clock signal.

6. 6[a] The stage circuit as claimed in claim 2, wherein the first driver includes: a first transistor between the first input terminal and the second node, the first transistor having a gate electrode coupled to the second input terminal; and

   6[b] a second transistor and a third transistor serially positioned between the second node and the first power supply,

   6[c] wherein a gate electrode of the second transistor is coupled to the third input terminal, and

   6[d] wherein a gate electrode of the third transistor is coupled to the first node.

### 2. Claim Construction

I construed the following term from the asserted claims as follows:

| TERM | CLAIM(S) | CLAIM CONSTRUCTION |
|---|---|---|
| "directly controls" | 1 | Plain and ordinary meaning, i.e., "controls with no intervening circuit elements" |

| TERM | CLAIM(S) | CLAIM CONSTRUCTION |
|---|---|---|
| "node" | 1 | Plain and ordinary meaning, which is "a point or area of interconnection between two or more components." |
| "an outputting unit having a first node and a second node, the outputting unit to supply a voltage of a first power supply to the output terminal according to a voltage applied to the first node and a signal of the third input terminal to the output terminal according to a voltage applied to the second node" | 1 | Plain and ordinary meaning |
| "a first driver to control the voltage of the second node in accordance with signals of the first input terminal, the second input terminal, and the third input terminal" | 1 | Plain and ordinary meaning, wherein "driver" is 'an electronic circuit used to power or control something." |
| "a second driver to control the voltage of the first node in accordance with the signal of the second input terminal and the voltage of the second node" | 1 | Plain and ordinary meaning, wherein "driver" is 'an electronic circuit used to power or control something." |

Order No. 28 at 14-15, 18, 24-25, 33, 37.

### 3. Level of Ordinary Skill in the Art

I previously found that a person of ordinary skill in the art with respect to the '593 patent would have had a relevant degree in Electrical Engineering, Computer Engineering, Materials Science, Physics, or the like, and experience in active matrix display design and electroluminescence. Order No. 28 at 12.

### B. Infringement

Complainant asserts that the [redacted] the BLF Accused Products, and the Defaulting Respondents Accused Products each infringe claim 6 of the '593 patent. CIB at 124, 138. Complainant further asserts that the [redacted].[41] *Id.*

#### 1. BOE Accused Products

##### a) Limitations 1[b] and 1[c]

Limitations 1[b] and 1[c] recite: "a first driver to control the voltage of the second node in accordance with signals of the first input terminal, the second input terminal, and the third input terminal; and a second driver to control the voltage of the first node in accordance with the signal of the second input terminal and the voltage of the second node, wherein." JX-0002 at cl. 1.

Complainant does not have any testimony from Dr. Fontecchio showing that these limitations are met.[42] *See* CX-1629C-NCT (Fontecchio) at 145-149 (indicating that the entirety of Dr. Fontecchio's opinions with respect to these limitations were struck).[43] While expert testimony is not required in every case to show literal infringement, it is "generally required in cases involving complex technology." *AquaTex Indus., Inc. v. Techniche Sols.*, 479 F.3d 1320, 1329 n.

---

[41] BOE argues that [redacted]. RIB at 73. As set forth below, I find that Complainant has not shown that the [redacted] infringes. As such, it is unnecessary to determine if Complainant has shown that [redacted].

[42] Complainant claims that BOE and Staff dispute limitations 1[b] and 1[c] "only for an alternative theory based on [redacted] CRB at 38; *see also id.* at 40. Complainant does not have expert testimony on *any* theory of infringement, whether that theory be its alternative or its main theory. Even if BOE does not set forth a noninfringement argument, it is still Complainant's burden to show that the limitations are met.

[43] These opinions were struck in Order No. 55. This order was based on a motion *in limine* from BOE that moved to struck "entirely new '593 patent infringement theories" that were not disclosed in Dr. Fontecchio's expert report. *See* Order No. 55 (July 2, 2024).

7 (Fed. Cir. 2007).[44] The '593 patent involves circuits and is thus not the type of technology for which a lay person can readily assess infringement.

To overcome the lack of expert testimony, Complainant cites to the testimony of a BOE fact witness, Kai Zhang. CIB at 131-132. There is a disconnect, however, between the claim language and Mr. Zhang's testimony. Although the claim language requires a first driver, second driver, second node, and a first, second, and third input terminal, Mr. Zhang does not use these terms in his testimony. Mr. Zhang's testimony thus does not explain *how* BOE's products correspond to the claim limitations. At most, Mr. Zhang provides factual background on the operation of the BOE products but this testimony does not support a conclusion of infringement.

Further, Mr. Zhang's testimony does not provide sufficient support even for the conclusions that Complainant reaches. For example, for limitation 1[b], Complainant asserts that [redacted]" and further asserts [redacted].

[44] Complainant notes that there is no "per sue rule that expert testimony is required to prove infringement." CRB at 42 (citing *Centricut, LLC v. Esab Group, Inc.*, 390 F.3d 1361, 1370 (Fed. Cir. 2004)). I am not finding that Complainant failed to meet its burden due solely to the lack of expert testimony. Instead, as explained more fully below, Complainant failed to meet its burden because the evidence was insufficient to show that the claim limitations were met.

Other statements in Complainant's brief suffer from similar flaws. As another example, with respect to limitation 1[c], Complainant makes statements about how the circuits work, but the cited testimony does not sufficiently support Complainant's conclusion. For example, Complainant states that "[redacted] In support of these statements, Complainant cites to both the testimony above and another portion of Mr. Zhang's cross-examination. *Id.* (citing Tr. (Zhang) at 822:25-823:11, 830:15-25). In the newly cited testimony, Mr. Zhang confirmed that: [redacted] It is possible that one of ordinary skill in the art when reading this testimony would understand it to provide sufficient support for Complainant's conclusions, but without expert testimony, that is only an assumption. A lay person reading Mr. Zhang's testimony would not reach the conclusion that [redacted] The technology here is complex. This is not, for example, a situation in which I can easily draw conclusions based on the facts to support a finding of infringement. Here, I would need to make too many assumptions and have a specific understanding regarding the functioning of circuits (similar to that of one of skill in the art) to make the connection between Mr. Zhang's testimony and Complainant's conclusions. For these reasons, I find that Complainant has not established that the [redacted] products meets limitations 1[b] or 1[c].

Because Complainant cannot show how the [redacted] products meets all of the limitations of claim 1, it cannot show that the [redacted] product meets dependent claim 6. As such, I find that [redacted] does not infringe claim 6. Additionally, because Complainant relies on [redacted] as a representative product, I find that Complainant has not shown that any of the BOE Accused Products infringe claim 6.

**2. Redesigned Products**

BOE explains that it [redacted]." RIB at 76. BOE asserts that NIA [redacted] does not meet limitation 1[c]. *Id.* [redacted]

Complainant does not introduce any evidence of infringement. As such, it has failed to meet its burden to show that NIAs [redacted] infringe the '593 patent. *See Spansion*, 629 F.3d at 1349 (holding that complainant bears the burden of proving infringement of the asserted patent claims by a preponderance of the evidence).

**3. BLF Accused Products**

The BLF Respondents stipulated that Wholesale Gadget Parts' WGP-AP03118 is representative of all of the other BLF Accused Products. BLF Representative Products Stipulation at 4. The BLF Respondents also stated that they do not contest infringement of any of the asserted claims. BLF Undisputed Limitations at ¶ 3 ("The BLF Respondents dispute no claim limitation of the Asserted Claims with respect to infringement.").

Staff explains that "[t]he circuit diagrams prepared by Dr. Fontecchio for the Accused Products are substantially similar." SIB at 70. Thus, "Staff believes that the infringement disputes raised with respect to the Accused BOE Products apply equally to the Non-BOE Accused Products." *Id.* at 72.

I disagree with Staff that I should find noninfringement of the BLF Accused Products based on noninfringement arguments made with respect to the BOE Accused Products. Staff identifies two noninfringement positions with respect to claim 6. Neither of these noninfringement arguments apply here, despite the similarity in circuits. [redacted] There is no evidence to rebut these opinions. Thus, I am not persuaded that these noninfringement argument should prevail here.

Second, Staff's brief explains that Complainant did not meet its burden to show that limitations 1[b] and 1[c] were met by the BOE Accused Products because the only evidence supporting these limitations was excluded. SIB at 74 [redacted] *id.* at 75 [redacted] Dr. Fontecchio's evidence with respect to the BLF Accused Products was not struck and no party has argued that the evidence is insufficient to show infringement. CX-1629C-NCT (Fontecchio) at

Q/As 558-603. Thus, I am likewise not persuaded that this noninfringement argument merits a finding of noninfringement with respect to the BLF Accused Products. Accordingly, I find that the BLF Accused Products infringe claim 6 of the ’593 patent.

#### 4. Defaulting Respondents’ Accused Products

Complainant has shown that the Defaulting Respondents’ Accused Products meet the limitations of claim 6 of the ’593 patent. CX-1629C-NCT (Fontecchio) at Q/As 642-645. Accordingly, I find that the Defaulting Respondents’ Accused Products infringe claim 6 of the ’593 patent.

#### 5. Conclusion

As set forth above, I find that the BLF Accused Products and the Defaulting Respondents’ Accused Products infringe claim 6 of the ’593 patent. I further find that the BOE Accused Products and NIAs [redacted] do not infringe claim 6.

### C. Technical Prong

Complainant asserts that the [redacted] practices claim 6 of the ‘593 patent. CIB at 140. The parties agreed that the [redacted] is representative of other products, as shown below:

[redacted]

Representative Products Stipulation at 6.

BOE explains that "Dr. Fontecchio's flawed analysis was struck," and therefore Complainant is "unable to meet its burden to prove that S22 meets [1-a]/[1-b]/[1-c]." RIB at 77. BOE further asserts that, even if the evidence was not struck, Complainant's arguments "fail for the same reason that SDC was unable to prove infringement." *Id*.

Staff agrees that Complainant "has not shown that the DI products satisfy limitations 1[b] –[c]." SIB at 76. Staff explains that "[t]he only evidence cited by SDC in support of its contention that the DI products have a 'first driver' that 'control[s] the voltage of [node N2a] in accordance with signals of the first input terminal, the second input terminal, and the third input terminal' as required by limitation 1[b] was struck." *Id.* at 77-78. Similarly, "[t]he only evidence cited by SDC in support of its contention the DI Products have a 'second driver' that 'control[s] the voltage of the first node in accordance with the signal of the second input terminal and the voltage of [node N2A]' as required by limitation 1[c] was also excluded." *Id.* at 78.

Complainant does not have any testimony from Dr. Fontecchio showing that the S22 Ultra practices limitations 1[b] and 1[c] of the '593 patent. CX-1629C-NCT (Fontecchio) at 206-210 (redacted testimony regarding these limitations). As it did with infringement, Complainant attempts to supplant its evidence with citations to a fact witness, Hwan-Soo Jang. Mr. Jang's testimony does not support Complainant's conclusions, however. For example, Complainant asserts that "[w]hen [redacted] is ON, the signal of [redacted] provided through [redacted] to second node [redacted] CIB at 143. Complainant cites to Q/A 21 of Mr. Jang's testimony, but this testimony does not mention [redacted] at all. CX-1631C-NCT at Q/A 21. Additionally, Complainant states that "[w]hen [redacted] signal is low, [redacted] turns on, and [redacted] signal is provided to [redacted] CIB at 143. Complainant cites to an additional Q/A, but Mr. Jang does not reference [redacted] in this testimony either. CX-1631C-NCT at Q/A 24. As was the case with respect to infringement, there needs to be testimony connecting the facts to which Mr. Jang testifies to the conclusion that Complainant draws from these facts. Here, there is not.

Similar problems occur with the remainder of Complainant's citations to Mr. Jang. As such, I find that Complainant has not established that the S22 Ultra practices limitations 1[b] or

1[c]. As such, Complainant has not established that any of the Domestic Industry Products practice the ’593 patent.

### D. Invalidity

BOE asserts that the ’593 patent is invalid because: (1) U.S. Patent Pub. No. 2007/0063950 (“Shin”) and U.S. Patent Pub. No. 2005/0185752 A1 (“Sasaki”) renders claim 6 obvious (RIB at 79-81); (2) the terms “first node” and “second node” are invalid for lack of written description (*id.* at 84-85); and (3) “outputting unit,” “first driver,” and “second driver” are indefinite *Id.* at 85.

As with the ’599 patent, the opinions of BOE’s primary invalidity expert, Dr. Foty, were struck. Order No. 60 (July 2, 2024). Likewise, BOE’s other expert, Mr. Credelle, did not opine as to how the prior art references disclose each limitation of the asserted claims. *See generally* RX-0006C (Credelle). For these reasons, both Complainant and Staff assert that BOE cannot meet its burden to show that the patent is obvious. CIB at 150; SIB at 78.

#### 1. Shin/Sasaki

BOE argues that “Shin/Sasaki renders obvious claim 6.” RIB at 79. According to BOE, Complainant “does not dispute that the combined Shin/Sasaki stage circuit discloses claims 1-2 and 6.” *Id.* at 81. BOE further asserts that “[a] POSITA would have been motivated to combine Shin/Sasaki, by adding the ‘anti-reversal’ circuitry of Sasaki’s Figure 4 embodiment . . . to Shin’s Figure 11 embodiment, to ensure that the node voltage at the gate of Shin’s transistor M2 is not ‘reversed’ during the control sequence.” *Id.* at 79.

Complainant argues that “BOE presented no evidence or opinion showing how Shin and/or Sasaki purportedly disclose or render obvious any limitation of claim 6.” CIB at 150. Complainant notes that “BOE does not provide any limitation-by-limitation analysis and relies on what Dr.

Foty's struck opinions allegedly 'would have constituted.'" CRB at 43. Complainant also asserts that "POSITAs would not have combined Shin and Sasaki." CIB at 150.

Staff argues that BOE's arguments with respect to motivation are "not supported by the testimony providing the viewpoint of a POSITA." SIB at 78. Staff explains that Dr. Foty's testimony was excluded and Mr. Credelle's testimony is "conclusory" and "does little more than state that he agrees with the excluded opinions of Dr. Foty." *Id.* Staff further asserts that BOE's argument with respect to motivation should be found waived pursuant to Ground Rule 14.2. SRB at 32.

I find that BOE has failed to meet its burden to show that Shin and Sasaki render claim 6 obvious. While BOE argues that Complainant does not dispute these limitations, BOE still bears the burden of proof.[45] By failing to cite to evidence or provide any explanation for how the limitations were disclosed by the references, BOE cannot show that this combination renders claim 6 obvious.[46]

Nor can BOE establish that one of skill would be motivated to combine Shin and Sasaki. BOE cites to the testimony of Mr. Credelle that one of skill would have been so motivated. RIB at 81. In this testimony, however, Mr. Credelle offers two opinions with respect to motivation. First, he states that he "agree[s] with Dr. Foty's discussion of this combination, his conclusion that a

---

[45] Even if limitations are undisputed, the party bearing the burden must cite to evidence. In fact, during a case management conference, BOE's counsel expressed that it was his understanding that "even if the private parties were to agree that a limitation was undisputed for purposes of invalidity or infringement, the party with the burden of proof would still need to provide some evidence . . . in order for the Commission to have a record to support the ultimate finding. 5/2/24 Tr. at 43:22-44:2. I confirmed that "if there's an agreement that something is uncontested, there can be a very short statement about that limitation or a citation even to expert testimony," but noted that "the burden still exists." *Id.* at 44:7-16.

[46] BOE has also waived its arguments per my Ground Rules.

POSITA would have been motivated to combine Shin and Sasaki, and the other related issues he has discussed." RX-0006C (Credelle) at Q/A 28. Because Dr. Foty's testimony was struck, any reference to the testimony is not probative.

Second, Mr. Credelle identifies his own motivation for combining the references. He states that "another motivation to combine Shin and Sasaki is to prevent floating nodes by adding an anti-reversal circuit comprising serially coupled transistors which can achieve stable output waveforms without distortion." RX-0006C (Credelle) at Q/A 28. According to Mr. Credelle, "distorted waveforms may cause errors in shifting gate signals to the next rows." *Id.* The evidence shows, however, that Shin already included a capacitor which addressed any potential floating state of the node. CX-1242C-NCT (Fontecchio) at Q/A 221. Dr. Fontecchio also testified that "a POSA would also recognize downsides, as adding elements to a circuit may increase complexity, decrease stability, and lower process yield." *Id.* Mr. Credelle does not adequately address this testimony. Accordingly, BOE does not establish, by clear and convincing evidence, that one would be motivated to combine the references.

As such, I find that BOE has not established that Shin and Sasaki render obvious claim 6 of the '593 patent.

**2. Secondary Considerations**

Secondary considerations of nonobviousness may rebut a prima facie case of obviousness. Here, where BOE has not made out a prima facie case of obviousness, there is no showing to rebut. Accordingly, I need not consider any secondary considerations of nonobviousness.

**3. Written Description**

BOE states that "[t]he ALJ adopted SDC's construction of 'node' – 'a point or area of interconnection between two or more components.'" RIB at 84. According to BOE, "[i]f SDC

applies 'node' so broadly as to cover 'nodes' encompassing intervening circuit elements . . . , its claims are invalid because there is no written description showing inventor Jang was in possession of that 'invention' and a POSITA would not know what the claimed 'nodes' are." *Id.* at 84-85.

Complainant argues that "BOE presented no evidence of failure to meet § 112." CIB at 152. Complainant states that "Mr. Credelle only conclusory asserts he 'agree[s] with Dr. Foty's discussion on the topic," but notes that Dr. Foty's discussion "is not in evidence." *Id.*

Staff "believes that SDC's interpretation of the claims is incorrect." SIB at 79.

I first find that BOE's argument is too conclusory under my Ground Rules. BOE's entire argument consists of two sentences, an image, and a footnote.[47] Accordingly, BOE has waived the argument that the '593 patent is invalid under 35 U.S.C. § 112 for lack of written description.

Additionally, BOE does not support its arguments with the testimony of one of skill in the art. Because the question of whether a patent complies with the written description and enablement requirements is viewed from the perspective of one of skill, the failure to cite to such evidence means that BOE cannot meet its burden. *See Ariad*, 598 F.3d at 1351.

Accordingly, BOE has not shown that the '593 patent is invalid under 35 U.S.C. § 112 for lack of written description.

#### 4. Indefiniteness

According to BOE, Complainant "argues [1a-c]'s 'outputting unit,' 'first driver,' and 'second driver' encompass anything that affects or is affected by the voltage of some part of the circuit." RIB at 85. BOE asserts that "[u]nder SDC's interpretation, a POSITA would not know

[47] BOE's argument also appears conditional. BOE does not assert that the claim terms, as construed, lack written description. Instead, it asserts that an argument could be made, depending on Complainant's interpretation of the claims. RIB at 84 (stating that the term lacks written description "***[i]f*** SDC applies 'node" so broadly…" but not stating that SDC did so).

what the outputting unit or first or second driver are because there is no way to judge the extend of control required by each unit or driver (as opposed to other circuit components) and the component's inputs and outputs are thus arbitrary, which renders the claims indefinite." *Id.*

Complainant argues that "BOE presented no evidence of failure to meet § 112." CIB at 152. Complainant states that "Mr. Credelle only conclusory asserts he 'agree[s] with Dr. Foty's discussion on the topic," but notes that Dr. Foty's discussion "is not in evidence." *Id.*

Staff "believes that SDC's interpretation of the claims is incorrect." SIB at 79.

I find that BOE's argument is too conclusory under my Ground Rules. BOE's entire argument consists of two sentences and fails to explain how the claim was indefinite. Accordingly, BOE has waived the argument that the terms "outputting unit," "first driver," or "second driver" are invalid as indefinite.

## VIII. ECONOMIC PRONG

Complainant asserts that there are three types of investments that satisfy the economic prong: (1) investments by its affiliate Samsung Electronics America ("SEA"); (2) investments in its U.S. based R&D lab, Samsung Display America Lab ("SDAL"), and (3) investments by its supplier Universal Display Corporation ("UDC"). CIB at 152-153.[48]

[48]Complainant states that "[t]he DI Products are discussed jointly because each DI Product practices at least one claim of each Asserted Patent." CIB 153 n.7. Respondents assert that Complainant's analysis is problematic if "the ALJ finds some, but not all, DI Products satisfy the technical prong for a particular Asserted Patent." RIB at 86. As noted above, I found that each of the representative DI Products practiced at least one claim of the '803, '578, and '599 patents. As such, it is appropriate not to conduct a separate analysis for each patent. *See Zircon Corp. v. Int'l Trade Comm'n*, 101 F.4th 817, 824 (Fed. Cir. May 8, 2024) ("In cases in which all the domestic industry products practice all the asserted patents, it follows from the language of section 337 and our case law that the complainant could satisfy the economic prong as to all asserted patents based on the entire product group."). I further note that, although I found that the technical prong was not met for the '593 product, none of the domestic industry products practice only that patent. *See* Representative Products Stipulation.

Complainant relies on investments in two categories of DI Products: (1) the AMOLED DI Products, which are displays modules manufactured by Complainant; [49] and (2) the Galaxy DI Products, which are Galaxy mobile devices manufactured by SEC that incorporate the AMOLED DI Products. Respondents and Staff assert that only investments in the first category of products should be included in the economic analysis, while Complainant asserts that it can rely on either category of products. I must therefore begin the analysis by defining the relevant domestic industry.

### A. Relevant Domestic Industry

A domestic industry is generally defined in terms of the patented article. *See, e.g.*, *Certain Modular Structural Systems*, Inv. No. 337-TA-164, Comm'n Op., USITC Pub. 1668, at 12 (June 1984). The "articles requirement sometimes requires the Commission to determine what the appropriate domestic industry articles are." *Certain Integrated Circuit Chips and Products Containing The Same*, Inv. No. 337-TA-859, Comm'n Op. at 36 (Aug. 22, 2014) ("*Integrated Circuit Chips*") (*citing Certain Video Game Systems & Wireless Controllers and Components Thereof*, Inv. No. 337-TA-770, Comm'n Op. at 66-70 (Oct. 28, 2013) ("*Video Game*")); *Certain Kinesiotherapy Devices and Components Thereof*, Inv. No. 337-TA-823, Comm'n Op. at 33-35

[49] Both Respondents and Staff assert that the patented article is an AMOLED panel, and not the AMOLED DI Products. RIB at 89; SIB at 81. Thus, as Staff notes "the AMOLED DI Products are downstream or secondary products incorporating the patented article," while "the AMOLED DI Products are components of Galaxy DI Products, which are tertiary products, i.e., a second tier of downstream products, incorporating the secondary product (the display module)." SIB at 81-82. Neither Staff nor Respondents argue, however, that it is inappropriate to establish a domestic industry based on the AMOLED DI Products. RX-1085C (Herrington) at Q/A 48 (arguing that "the AMOLED DI Products . . . are the appropriate article of commerce by which to evaluate the domestic industry"); RRB at 34 ("AMOLED DI Products . . . are the proper DI article"); SIB at 83 (asserting that "the relevant domestic industry can be defined in terms of display modules, such as the AMOLED DI Products").

(July 12, 2013), *rev'd on other grounds sub nom*., *Lelo, Inc. v. ITC*, 786 F.3d 879 (Fed. Cir. 2015)). "The Commission has held that in certain circumstances, the realities of the marketplace require[] a modification" of that principal. *Certain Magnetic Tape Cartridges & Components Thereof*, Inv. No. 337-TA-1058, Comm'n Op. at 48 (Apr. 9, 2019) (internal quotations and citations omitted) ("*Magnetic Tape"*). Thus, in some exceptional circumstances, the Commission recognizes expenditures in a downstream product where a patented article "is not itself an actual article of commerce, but is physically incorporated as a component in a downstream article of commerce." *Video Game* at 66. In such circumstances, the Commission may, depending on the facts of each particular investigation, extend the relevant industry to the downstream article. *Id.*

The Commission has determined that the realities of the marketplace warrant crediting domestic investments in a handful of cases. The Commission summarized much of this history in *Magnetic Tape*. It noted that, in *Certain Personal Computers & Components Thereof*, the Commission credited domestic investments in a personal computer (the downstream product) when the software (the patented article) was an essential component of the computer and the computer could not be used without the software. Comm'n Op. at 48 (citing *Certain Personal Computers & Components Thereof*, Inv. No. 337-TA-140, USITC Pub. 1504, Comm'n Op. at 41 (Mar. 1984)). Next, the Commission discussed *Certain Double-Sided Floppy Disk Drives & Components Thereof*, a case in which the Commission credited domestic investments in a double-sided floppy disk drive (the downstream product) instead of limiting the domestic industry to the head assemblies incorporated in the disk drives (the patented article) "because it is the importation and sale of the disk drives that compete directly with the domestic activities of the patentee." *Id.* at 48 (citing *Certain Double-Sided Floppy Disk Drives & Components Thereof*, Inv. No. 337-TA-215, USITC Pub. 1860, Comm'n Op. at 17-18 (Oct. 15, 1985) ("*Floppy Disk Drives*")).

The Commission also discussed more recent cases in which investments in a downstream product were credited. The Commission stated:

> In a more recent example, the Commission in *Video Game Systems* found that the specification of the asserted patents made clear that the technology of the patented invention involved "a wand having certain transmitter and motion-sensitive circuitries that interact wirelessly with receivers or actuators distributed throughout the play facility." Comm'n Op. at 67-68. The Commission determined that the complainant was entitled to rely on expenses related to 'the claimed wand, [the] electronic receivers within the MagiQuest effect, and the relevant main server software that coordinates these effects," *id.* at 73, "which are central to enabling [the complainant] to exploit the technology of the claimed toy wands, but not on expenses relating to the entire MagiQuest attraction," *id.* at 70, such as the "physical space, design themes, physical props, other peripheral items, and sales and training staff," *id.* at 68.

*Id.* at 48-49. The Commission then discussed a 2014 decision in which an ALJ credited domestic investments in an S9 flow generator (the downstream product) because it found that the flow general "'is central to enabling [complainant] to exploit the patented technology of the H5i humidifier" given that the humidifier 'is designed to work only with the S9 flow generator,' and some of the 'H5i humidifiers are sold in a 'co-pack' with an S9 flow generator." *Id.* at 49 (citing *Certain Sleep-Disordered Breathing Treatment Systems & Components Thereof*, Inv. No. 337-TA-890, Initial Determination at 147 (Sept. 16, 2014)*, not reviewed in relevant part*, Comm'n Op. at 45 n.13 (Jan. 20, 2015) ("*Sleep-Disordered Breathing*")).

After discussing this precedent, the Commission concluded: "In sum, the Commission has credited domestic investments when they are made with respect to an 'essential,' 'necessary,' and/or 'integral' part of the article covered by the patent claims and/or is 'central to enabling' exploitation of the article covered by the patent claims." *Id.* at 50. The Commission also articulated the factors to consider in conducting this analysis. It stated: "Factors to consider regarding the realities of the marketplace analysis include whether the patented technology is sold as a separate

entity or article of commerce; whether it is an essential component of the downstream product; and whether the domestic industry activities have a direct relationship to exploitation of the patented technology." *Id.* at 48. Given this guidance from the Commission, I analyze each of the three factors below.

**1. Sold as a Separate Entity or Article of Commerce**

Complainant argues that "the AMOLED DI Products can only be used in their corresponding Galaxy DI Products." CIB at 155. According to Complainant, "[t]he AMOLED DI Products are sold only from SDC to SEC as components for incorporation into the corresponding Galaxy DI Products, or as replacement parts for those Galaxy DI Products; they have no other use." *Id.*

Respondents assert that "[d]isplays are separate and distinct articles of commerce from phones." RIB at 87. According to Respondents, "[s]ince a distinct market exists for replacement displays, downstream phones are not DI articles." *Id.* Respondents also explain that the "alleged collaboration [between SDC and SEC] has no bearing on whether 'the patented technology is sold as a separate entity or article of commerce." RRB at 36.

Staff asserts that "both AMOLED panels and AMOLED DI Products are themselves articles of commerce." SIB at 82. Staff notes that display modules are sold to both distributors (for use as replacement displays) and by display manufacturers to mobile device OEMs, such as [redacted] (for use in both new mobile devices and as replacement displays). *Id.* at 82-83. Staff therefore "believes that the relevant industry can be defined in terms of the display modules, such as the AMOLED DI Products." *Id.* at 83.

The evidence shows that the AMOLED DI Products are sold as separate articles of commerce. Complainant sells the AMOLED DI Products to SEC in arm's-lengths transactions.

Tr. (Kim) at 565:16-19 [redacted] *see also* Tr. (Cho) at 611:16-19, 613:5-8. [redacted]. CX-1627C (Vander Veen) at Q/A 34; CX-1603C (Sheppard Dep.) at 118:8-14; CX-1633C (Cho) at Q/A 4; RX-1085C (Herrington) at Q/A 54, 59. [redacted] CX-1603C (Sheppard Dep.) at 176:16-22, 197:9-13; Tr. (Vander Veen) at 425:22-426:10. Thus, as Respondents note, "a distinct market exists for replacement displays." RIB at 87. The AMOLED DI Products themselves are a product that can be exploited from an economic perspective, even apart from their use in a Galaxy phone. [redacted]. RX-1085C (Herrington) at Q/A 59; CX-1603C (Sheppard) at 118:8-14. When this occurs, [redacted] RX-1085C (Herrington) at Q/A 59; CX-1603C (Sheppard) at 176:16-22. Further, the articles that Complainant seeks to exclude are themselves the display modules – as opposed to a downstream product. *See Floppy Disk Drives* (finding the definition of the products sought to be excluded to be relevant in the analysis). As a whole, the evidence suggests that the AMOLED DI Products are, in fact, a separate article of commerce.

Despite this finding, it is unclear if this factor weighs against crediting domestic investments in the Galaxy DI Products. Even in situations in which the Commission has found that a product is sold as a separate entity, the Commission concluded that a complainant could rely on investments in a downstream product. For example, in *Sleep-Disordered Breathing*, the ALJ noted that the patented article – the H5i humidifier – is "sometimes sold separately." Initial

Determination at 149; *see also id.* 9 (noting that "the H5i humidifier and S9 flow generator are actually sold by [complainant] as separate articles"). Nevertheless, the ALJ found that the complainant could rely on the S9 flow generator because the H5i humidifier "cannot function on its own, and cannot practice the claims . . . without an S9 flow generator." *Id.* at 149; *see also Magnetic Tape*, Comm'n Op. at 52 (noting that, "[i]n *Floppy Disk Drives*, the Commission affirmed the ALJ's decision to define the domestic industry as the domestic operations devoted to the manufacture of double-sided floppy disk drives, rather than the head assemblies, even though the ALJ found the patent at issue was directed to the head assembly, and the head assembly was a separate article of commerce"). Thus, the fact that the downstream product was essential to the patented product was determinative, while the question of whether the patented article is a separate article of commerce carried less weight.

For these reasons, I do not consider this factor to weigh either for or against extending the domestic industry to the downstream product.

**2. Essential Component of Downstream Product**

Complainant asserts that "the AMOLED DI Products are indisputably central, essential components of the Galaxy DI Products, providing the means by which users interact with the smartphones' functionality." CIB at 155. Complainant also states that "the Galaxy DI Products are sold exclusively with, and cannot function properly without, their corresponding AMOLED DI Products." *Id.*

Respondents argue that [redacted] RIB at 88. According to Respondents, [redacted] AMOLED DI displays [redacted] RRB at 37. Respondents

further disagree that the fact that the AMOLED DI Products are customized for use in Galaxy phones favors a finding that the displays are essential components. RIB at 88.

I find that the AMOLED DI Products are essential components of the Galaxy DI Products. The evidence shows that the AMOLED DI Products are customized to work in the Galaxy DI Products and that the Galaxy DI Products are unable to function without the displays. *See, e.g.*, CX-1629-NCT (Fontecchio) at Q/A 38-39.

I am not persuaded by Respondents' argument that other displays can be used in place of AMOLED displays. In support of this statement, Respondents cite to the testimony of Coleman Bazelon and Mr. Herrington, as well as to Complainant's interrogatory responses. *See* RIB at 88 (citing Tr. (Bazelon) at 756:7-14; RX-1085C (Herington) at Q/A 60; Tr. (Herrington) at 969:18-24; RX-0714C.23). None of this evidence shows that [redacted]. Instead, it shows only that, in theory, the Galaxy DI Products could be modified to operate with different displays. The fact that it is theoretically possible to modify a product so that it could work with other components does negate a finding that the existing component is essential.

Accordingly, I find that this factor weighs in favor of extending the domestic industry to the Galaxy DI Products.

### 3. Direct Relationship of Exploitation of the Patented Technology

Complainant asserts that "the benefits of the Asserted Patents are exploited by the AMOLED DI Products only through their corresponding Galaxy DI Product." CIB at 153. It further notes that "it is undisputed (i) the claimed inventions (displays) can only be practiced if used in a device providing requisite input signals and power, and (ii) the Asserted Patents offer particular benefits for use in smartphones." *Id.* at 156. Complainant states: "The very purpose of

an AMOLED DI Product is to display useful information to a user," which is "impossible without it being assembled as an integral part into its corresponding Galaxy DI Product and into the hands of consumers." *Id*.

Respondents argue that "SEA's domestic activities regarding Galaxy DI Products have nothing to do with the patented technology in the display's pixel arrangement, stage circuits, or pixel circuits." RIB at 89. Respondents explain that "the Asserted Patents apply to a stand-alone display panel (which includes the pixel arrangement and the scan and circuit drivers) and do not cover the additional components in a display module, much less in a Galaxy smartphone." *Id.*

Staff contends that this factor is "[p]erhaps the most important." SIB at 86. Staff notes that SEA's activities pertaining to the Galaxy DI Products "do not have a 'direct relationship' to the patented pixel arrangements, pixel circuits, and stage circuit." *Id.* Staff notes that Complainant's expert, Dr. Vander Veen, "places SEA's investments into [redacted] functional groups," but that the "relationship between the patented technology and the activities performed by these groups is extremely attenuated." *Id.*

The Commission has stated that when a downstream product is essential to the use of the patented article a direct relationship to that component is shown:

> If a patented article practices the patent claim, but the patented article cannot function on its own without a non-patented product, or in other words the non-patented product is essential to the practice of the patented article, then the non-patented product necessarily has a direct relationship to the exploitation of the patented technology. In this case, while the claimed subject matters of the Media Patents can be practiced without a tape drive, there is no dispute that the tape media is useless without a tape drive. In other words, the tape drive is necessary to bring the patented technology to the consumer market.

*Magnetic Tape*, Comm'n Op. at 56. In *Magnetic Tape*, the Commission also rejected the respondent's argument that, in prior cases, while the patents "did not 'directly claim' components

of the separate article of commerce . . . those components were expressed in the claims in a manner that made them necessary to define the invention claimed." *Id.* Instead, the Commission noted that, in both *Sleep-Disordered Breathing* and *Video Game*, "the complainants were entitled to rely on expenses that were needed to ensure that the patented articles could be used by consumers." *Id.* at 57.

I do not, however, read this opinion as indicating that the Commission assumes that all investments in the non-patented product can be included in the domestic industry. For example, in *Magnetic Tape*, the respondent and Staff argued that "investments in maintenance [and] research and development" were too "far removed from the technology protected by the patent." Comm'n Op. at 54. The Commission disagreed but reached its conclusion based on the evidence in the record showing that the investments had a "direct relationship to exploitation of the patented technology." *Id; see also id.* at 55 (explaining that "Sony has established that IBM's domestic 3592 drive development work is devoted to improving the interoperability of the 3592 tape media with drives"). The Commission also noted that the specifications for the two patents at issue "make clear that Sony's claimed inventions are intended to improve the performance of tape media when they are used in conjunction with tape drives." *Id.* at 54. Thus, a complainant cannot simply state that the patented article cannot function on its own without a non-patented product and expect each and every investment in the non-patented article to be credited. Instead, there must be some showing that the domestic industry investments either have a direct relationship to the exploitation

of the patented technology or are necessary to ensure that the patented articles could be used by consumers.[50]

I find that Complainant has not made such a showing here. As Staff notes, the domestic activities fall into [redacted] categories:

[redacted]

[50] Respondents cite to *Certain Printing & Imaging Devices*, Inv. No. 337-TA-690, Comm'n Op., 2011 WL 1303160, at *15 (Feb. 7, 2011) ("*Printing & Imaging Devices*") for the proposition that "[w]hen domestic activities do not have a direct relationship to exploitation of the patented technology, this weighs against including those unrelated activities in DI." RIB at 88. *Printing & Imaging Devices* did not address whether to extend the "article protected by the patent" to a downstream product. Instead, in *Printing & Imaging Devices*, the Commission discussed the determination of whether an investment was "significant in relation to the articles protected by the intellectual property right concerned." 2011 WL 1303160, at *15. While both use the phrase "articles protected" by an intellectual property right, they are different inquiries. Additionally, I note that *Magnetic Tape* does not discuss *Printing & Imaging Devices*, thus further indicating that the Commission does not consider the analysis conducted with respect to whether investments are significant or substantial to be the same as the analysis that should be applied when determining whether the realities of the marketplace warrant extending the investments to a downstream product.

[redacted]

SIB at 86-87. Complainant does not, however, demonstrate how any of these activities relate to the exploitation of the patented technologies or show how the investments are necessary to ensure that the patented articles (*i.e.* the displays) could be used by consumers. *See, e.g.*, CIB at 160-161 (providing brief explanations for the different categories but failing to articulate the relationship between these investments and the exploitation of the patented technologies); *see also id.* at 162 (making only a conclusory allegation that "[e]ach of these U.S.-based activities of SEA and its employees . . . [redacted]"); *see also* CRB at 50. Complainant instead states that "the AMOLED display cannot be used without the Galaxy smartphone" (*see* CIB at 153) and therefore assumes that all investments are properly considered.

Such a showing would be particularly helpful here where some of the claimed investments appear to be far removed from the patented technology. One of the categories of investments is [redacted] CIB at 160. According to Complainant, [redacted] Complainant does not provide a further description of what these investments even are or describe how they

relate to bringing the Galaxy DI Products to the market.[51] Complainant also includes investments in its [redacted] *Id.* Once again, Complainant does not show why investments in training should be considered. *See also Video Game*, Comm'n Op. at 68 (declining to find that the articles protected by the patents extended to investments in training retail personnel). Without such evidence, I find that Complainant has not met its burden to show that this factor weighs in favor of extending the domestic industry to the Galaxy phones.

Further, the circumstances of this case present a complicated picture that underlines the importance of establishing such a relationship. This is not a case in which the "imported product is a component of a complete downstream product." *Video Game*, Comm'n Op. at 67. Both the [redacted] CX-1636C-NCT-PSC (Pyon) at Q/A 13. [redacted]

[51] Complainant does cite to the testimony of Dr. Vander Veen after its description of this category. CIB at 160. My Ground Rules do not, however, permit parties to forgo making arguments in their brief and instead cite to evidence. Ground Rule 14.2. Additionally, even if this testimony were considered, it does not provide the link between the investments and the exploitation of the patented technology. Dr. Vander Veen's testimony indicates that these [redacted] CX-1627C-NCT (Vander Veen) at Q/A 50. He then asserts [redacted] While consumers may desire these features, neither Complainant nor Dr. Vander Veen have demonstrated that the investments are necessary to ensure that the patented articles could be used by consumers. Instead, they seem more akin to the "physical space, design themes, physical props, other peripheral items, and sales and training staff" that the Commission found could not be included in *Video Game*. Comm'n Op. at 68.

[redacted]. *Id.* Complainant [redacted]. While Complainant and [redacted]. Tr. (Kim) at 565:16-19; Tr. (Cho) at 611:16-19, 613:5-8. Complainant also [redacted]. *See, e.g.*, CX-1635C (Kim) at Q/A 10-11. [redacted]. Tr. (Kim) at 574:23-575:5. [redacted].[52] RX-1085C (Herrington) at Q/A 54; Tr. (Vander Veen) at 424:9-11. At the time this occurs, the Galaxy DI Products are [redacted] Tr. (Vander Veen) at 461:1-16. As such, the facts of this investigation are distinguishable from other instances in which the Commission has extended the domestic industry to downstream products. *See Video Game*, Comm'n Op. at 67 (distinguishing cases that extended the domestic industry to the downstream product because those cases "involve[d] complainants that assemble a product in the United States that contains a patented component").

Accordingly, I find that this factor weighs against extending the domestic industry to the Galaxy DI Products.

**4. Conclusion**

For the reasons sets forth above, I find that factor two weighs in favor of including investments in the DI Galaxy Products in the domestic industry analysis, factor three weighs against such inclusion, and factor one is neutral.

---

[52] As noted above, [redacted] CX-1603C (Sheppard Dep.) at 118:8-14

The Commission does not explicitly indicate what weight each of these factors has. Its precedence, however, suggests that the third factor is the most important. In *Magnetic Tape*, the Commission indicated that it has "credited domestic investments when they are made with respect to an 'essential,' 'necessary,' and/or 'integral' part of the article covered by the patent[53] and/or is 'central to enabling' exploitation of the article covered by the patent claims." Comm'n Op. at 50. Additionally, in *Video Game*, the Commission explained that the "[m]ore important[]" inquiry is whether the alleged domestic industry activities "have a direct relationship to exploitation of the patented technology." Comm'n Op. at 67. A domestic industry may not extend to activities that are "far removed from the technology protected by the patent." *Id.* As such, I find that factor three carries great weight. Thus, I conclude that, overall, the facts here do not demonstrate that the realities of the marketplace warrant extending the domestic industry analysis to the downstream product.

Additionally, while not part of the three-factor test articulated by the Commission, I note that there does not appear to be precedent that allows a complainant to rely on a customer's investments in a downstream product. *See* SRB at 36. As noted above, [redacted] *See, e.g.*, CX-1635C (Kim) at Q/A 10 (explaining that SEC and SEC are "separate and distinct companies that operate independently"); Tr. (Vander Veen) at 420:10-14 (SEA is a subsidiary of

[53] I note that this is different from the second factor. While both use the word "essential," the second factor determines whether the patented technology is an essential component of a downstream product while, here, the Commission considers whether the domestic investments in the downstream product are "essential" (or necessary or integral) to the patented article as covered by the claims.

SEC). Complainant also [redacted]. CX-1635C (Kim) at Q/A 11 [redacted]"). Nor does Complainant assert that [redacted]. *See* Tr. (Vander Veen) at 421:11-14 ([redacted]). Thus, the facts here can be distinguished from other instances in which the definition was expanded. *See, e.g.*, *Magnetic Tape*, Comm'n Op. at 39 (complainant relied on investments by a company that had expressly licensed the asserted patents and that had "authorization to manufacture articles and/or have articles manufactured on IBM's behalf that are both protected by the Asserted Patents and that would otherwise be subject to a claim of infringement but for Sony's authorization"); *Video Game*, Comm'n Op. at 64-70 (complainant relied on its own investments and those of its licensees); *Sleep-Disordered Breathing* Initial Determination at 149 (complainant relied on its own investments in the H5i humidifier and the co-pack that also includes the S9 Flow Generator); *Certain Artificial Eyelash Extension Sys., Prods., & Components Thereof*, Inv. No. 337-TA-1226,, Initial Determination at 117-123 (Oct. 28, 2021) (complainant relied on its own investments in its argument that the domestic industry should be expanded); *Certain Personal Computers & Components Thereof*, Inv. No. 337-TA-140, USITC Pub. 1504, Comm'n Op. at 41 (Mar. 1984) (complainant relied on its own investments in personal computers). While I reached the conclusion that the domestic industry should not be expanded without consideration of this lack of precedence, it is unclear if an expansion of the domestic industry would even be permissible in situations such as this one. Thus, I give less weight to this set of facts, but I do consider it to weigh against extending the domestic industry to the downstream products.

Finally, Complainant's theory assumes that the default is to extend the domestic industry to the downstream products. That is not so. Such an extension is the exception to the rule. *See, e.g.*, *Certain Modular-Structural Systems*, Comm'n Op. at 12 (explaining that a domestic industry is generally defined in terms of the patented article). It is not automatic. *Video Game*, Comm'n Op. at 66 (Oct. 28, 2013) (explaining that, in certain circumstances, "the Commission **may**, depending on the facts of each particular investigation, extend the relevant 'industry' to a downstream article of commerce incorporating the patented component") (emphasis added). Given the complications of this investigation addressed above, I find that such an extension is not warranted here.

**B. SEA**

For its first economic prong theory, Complainant relies on investments in the Galaxy DI Products by SEA. *See* CIB at 159-164. Because I find that it was improper to rely on investments in the Galaxy DI Products, Complainant did not meet its burden to show that the economic prong has been met under this theory. *See* Tr. (Vander Veen) at 420:21-25 (acknowledging that he did not present an analysis of SEA's investments based on the AMOLED DI Products).

**C. SDAL**

Complainant's second economic prong theory relies on investments in the AMOLED DI Products by SDAL. SDAL is a research and development center located in California. CX-1632C (Park) at Q/A 6. It [redacted] *Id.* at Q/A [redacted] and therefore [redacted] *Id.* Complainant has identified approximately [redacted]

[redacted]. CX-1627C-NCT (Vander Veen) at Q/As 95-96. Complainant states that [redacted]

[redacted]

CDX-0002C.NCT.20; *see also* CX-1627C-NCT (Vander Veen) at Q/A 99. Complainant contends that these investments are both qualitatively and quantitatively significant. CIB at 166.

Respondents assert that there are numerous problems with Complainant's reliance on SDAL's investments to prove a domestic industry: (1) "SDC's witnesses do not believe displays are the appropriate article"; (2) "SDAL's investments are not 'with respect to the articles protected by the patent"; (3) "SDC's allocation methodology is flawed and overstated"; (4) "The purported SDAL DI expenses are overstated, unsupported, and/or not cognizable"; (5) SDAL's investments are unrelated to the asserted patents and therefore entitled to less weight"; (6) "SDAL's investments are not qualitatively significant"; and (7) "SDAL's investments are not quantitatively significant." RIB at 97-104. Finally, Respondents assert that Complainant waived its arguments regarding SDAL pursuant to Ground Rule 14.2. RRB at 44.

Staff states that "SDC's allocations of SDAL investments appear to be inflated." SIB at 89. Staff notes that "[i]t is unclear which – if any – of the research projects relied on by SDC were implemented in the AMOLED DI Products." *Id.* Staff further asserts that SDAL's investments are not quantitatively significant. *Id.* According to Staff, Complainant's first two comparisons "compare SDAL with itself, and the third compares SDAL with an SDC research facility in Japan." *Id.* Staff states that "[t]hese comparisons fail to show that SDC's U.S. investments in the AMOLED DI Products are significant." *Id.* Staff also argues that Complainant has not shown qualitative significance as [redacted] *Id.* at 92.

Even assuming that Complainant properly allocated qualifying investments, I find that Complainant did not meet its burden to show that SDAL's investments are either qualitatively or quantitatively significant.

**1. Qualitative Significance**

Complainant includes one sentence about qualitative significance in its briefs: "Because SDAL provides key contributions to SDC's R&D work related to the AMOLED DI Products and its location in the U.S. facilitates those contributions, SDAL's DI investments and activities are qualitatively significant." CIB at 166; *see also* CRB at 57 (not directly addressing qualitative significance and simply asserting that "SDAL's investments are significant"). This statement is conclusory and fails to explain *how* the investments are significant. It does not, for example, identify what "key contributions" SDAL purportedly provides or how these "key contributions" relate to the AMOLED DI Products. As such, Complainant has waived this argument pursuant to Ground Rule 14.2.

Even if Complainant had not waived this argument, the evidence does not show that SDAL's investments are qualitatively significant. The evidence shows that most of the SDAL projects have not been implemented in DI Products. RX-1085C (Herrington) at Q/A 126-127. Rather, as Staff explains, SDAL's research projects generally fall into three categories: [redacted] SIB at 89 (citing CX-1632C-NCT (J. Park) at Q/A 33). Mr. Park did not specifically explain how any of these projects related to the AMOLED DI Products. CX-1632C-NCT (J. Park) at Q/A 33, 58, 61, 64.[54] [redacted]. *Id.* at Q/A 65-66. [redacted] As such, Complainant has not met its burden to show that SDAL's investments are qualitatively significant.

**2. Quantitative Significance**

As with qualitative significance, Complainant only includes one sentence in its brief with respect to quantitative significance: "SDC's U.S. R&D investments in the AMOLED DI Products are quantitatively significant compared to (i) total investments in SDAL, (ii) SDAL's total investments in R&D, and (iii) the budget of SDAL's sister lab in Japan (SDJL), a reasonable

[54] During re-direct, Mr. Park provide some testimony as to how these categories relate to AMOLED displays. This testimony, however, was very general and conclusory. Tr. (Park) at 598:5-16 [redacted] *also id.* at 598:17-599:8 [redacted]

comparator." CIB at 166.[55] This statement is also conclusory. It simply states that the investments are significant but fails to address why or provide any detail. As such, Complainant has waived this argument pursuant to Ground Rule 14.2.

Because Complainant failed to show qualitative and quantitative significance of SDAL's investments, it did not meet its burden to show that the economic prong has been met under this theory.

**D. UDC**

Complainant's final economic prong theory relies on investments in the AMOLED DI Products by UDC. UDC is a United States corporation headquartered in New Jersey. CX-1604C ([redacted] Dep.) at 17:9-13. UDC develops and supplies in the United States phosphorescent organic light-emitting diodes materials ("PHOLED" or "dopants") for OLED displays. *Id.* at 17:14-22. UDC supplies red and green dopants to SDC. *Id.* at 91:7-14.

Complainant asserts that its "reliance on UDC is consistent with Commission precedent finding investments in U.S.-subcontracted components and services may satisfy the DI requirement." CIB at 167. According to Complainant, UDC provides [redacted] and "SDC's purchases of dopants undoubtedly lead to increased investment in personnel and other R&D and manufacturing expenditures by UDC." *Id.* Complainant asserts that UDC's allocated investments in the AMOLED DI Products are as follows:

[55] Complainant's reply brief adds very little. It states: [redacted] CRB at 57.

CDX-0002C-NCT.25; *see also* CX-1627C-NCT (Vander Veen) at Q/A 124. Complainant contends that these investments are qualitatively significant as the dopants are CIB at 170.

Respondents argue that I should reject Complainant's DI theory based on UDC's investments for five reasons: (1) "UDC's investments are not creditable to SDC under [*Lelo Inv. v. ITC*, 786 F.3d 879 (Fed. Cir. 2015)]"; (2) Complainant's "purported UDC DI expenses are overstated"; (3) "Dr. Vander Veen's allocation methodology is flawed and unreliable"; (4) Complainant "has not established UDC's investments are qualitatively significant"; and (5) Complainant "has not established UDC's investments are quantitatively significant." RIB at 105-111.

Staff agrees with Respondents that Complainant cannot demonstrate a domestic industry based on UDC's investments. Staff argues that "SDC's purchases of PHOLEDs from UDC are not cognizable under *Lelo*." SIB at 93. Staff further asserts that Complainant has not shown that UDC's investments are either quantitatively or qualitatively significant. *Id.* at 94-95.

**1. Qualifying Investments**

A complainant cannot rely on its purchase of "off-the-shelf" products to establish a domestic industry. *See, e.g.*, *Lelo*, 786 F.3d at 885 (stating that "[t]he purchase of so called 'crucial' components from third-party U.S. suppliers are insufficient to satisfy the 'significant investment' or 'significant employment of labor or capital' criterial of § 337 where there is an absence of evidence that connects the costs of the components to an increase of investment or employment in the United States"). A complainant can, however, rely on investments made by third parties if there is evidence to show that the third party's investments are attributable to the domestic industry products. *See Certain Solid State Storage Drives, Stacked Elecs. Components, & Prods. Containing Same*, Inv. No. 337-TA-1097, Comm'n Op. at 24 (June 29, 2018) ("In contrast to the 'retailer' suppliers in *Lelo*, who simply sold 'off-the-shelf' components, the evidence shows that the third-party entities here are, in fact, contractors, who provide specialized services, and do not simply sell 'off-the-shelf' products"); *id.* at 26 ("[C]onsistent with *Lelo*, the record contains data indicating the labor and capital attributable to the services provided to BNI for work related to the Altima I drive."); *see also Certain Collapsible Sockets for Mobile Elec. Devices & Components Thereof*, Inv. No. 337-TA-1056, Comm'n Op. at 18-19 (July 9, 2018) ("Since *Lelo*, the Commission has found evidence insufficient where the complainant relied on supplier payments without providing evidence regarding its suppliers' relevant investments in the complainant's products.").

Here, the record contains evidence with respect to the investments UDC makes to manufacture and develop dopants. CX-3093C; *see also* CX-1627C-NCT (Vander Veen) at Q/A 113. UDC did not, however, produce evidence that shows specific investments in the dopants used in the Domestic Industry Products. Instead, Dr. Vander Veen performed two allocations to determine the amount. First, Dr. Vander Veen sought to determine what percentage of UDC's work was attributable to Complainant using information on UDC's revenues. CX-1627C-NCT (Vander Veen) at Q/As 121-122. Second, Dr. Vander Veen sought "to identify the work correlated specifically to materials used in the Samsung Display AMOLED DI Products." *Id.* at Q/A 121. The second allocation was performed [redacted]" *Id.* at Q/A 123. The results of these calculations are shown in the chart included above.

I find, however, that there are flaws in Dr. Vander Veen's analysis. His analysis assumes that the dopants sold by UDC all count as qualifying investments, *i.e.*, they are not "off-the-shelf" components and are instead customized products, such that the investments can be attributed to the AMOLED DI Products. While the products may not be "off-the-shelf" in the colloquial sense, I do not find it to be a binary choice between "off-the shelf" and customized. In this case, the evidence shows that certain dopants are more akin to "off the shelf" than they are akin to being characterized as "customized," as those terms are defined by the Commission. In other words, the evidence does not support a finding that they are customized products. While Complainant asserts that [redacted] the evidence it cites is not sufficient to establish that this statement is true. CIB at 167. First, it cites to testimony from SDC employee Jin-Kyong Ham. *Id.* (citing Tr.

(Ham) at 377:10-17, 382:25-384:14; CX-1634C (Ham) at Q/A 9, 15-17, 25-29). Ms. Ham testified that [redacted] e. Tr. (Ham) at 377:10-17, 382:25-383:13, 383:17-384:13; CX-1634C (Ham) at Q/A 9, 15-17, 24-29. Complainant also cites to the testimony of Dr. Vander Veen. CIB at 167 (citing CX-1627C (Vander Veen) at Q/A 102-103). Dr. Vander Veen likewise confirmed his understanding that [redacted] CX-1627C-NCT (Vander Veen) at Q/As 102-103. Finally, Complainant cites to the deposition testimony of [redacted] UDC's CFO. CIB at 167 (citing CX-1604C ([redacted]) at 136:2-14). [redacted] testified that [redacted]. CX-1604C ([redacted] at 136:2-14.

The evidence shows that at least some of the dopants used in the domestic industry products were preexisting. As Respondents explain: [redacted] for non-DI phones. RIB at 106; *see* Tr. (Vander Veen) at 434:22-25 (confirming that [redacted]); *see also* Tr. (Ham) at 376:20-25 (agreeing that it appears that [redacted]). Further, [redacted]" RIB at 106.; *see* Tr. (Vander Veen) at 434:22-25 (confirming that [redacted]). Thus, while [redacted] the evidence does not show that [redacted]

[redacted].[56] Without this connection, one cannot rely on allocations such as the ones performed by Dr. Vander Veen. Instead, allocating investments in this way would necessarily include investments related to dopants that were not developed for the DI products, but instead were essentially "off the shelf" dopants that already existed. Because the allocated investment amount includes non-qualifying investments, I cannot find that Complainant met its burden to prove a domestic industry based on the investments by UDC.

**2. Quantitative Significance**

I also find that Complainant has not demonstrated that UDC's investments are quantitatively significant. Complainant bases its significance argument on the fact that [redacted]"[57] CIB at 170. This analysis does not demonstrate the significance of the investments with respect to the Domestic Industry Products. As Staff notes: "The only thing that this comparison shows [is] that UDC is based primarily in the U.S." SIB at 94.[58]

---

[56] Complainant does not dispute this evidence. Instead it asserts that the fact [redacted] CRB at 57. But if a product was customized to be used in a non-DI product, it is difficult to see how those investments can be attributed to the AMOLED DI Products. The statute specifies that the investments must be with respect to the articles protected by the patent. 19 U.S.C. § 1337(a)(3). It does indicate that a domestic industry can be found based on the investments of the complainant generally. Complainant does not offer an answer to this concern.

[57] Both Respondents and Staff address two other theories regarding quantitative significance that Complainant set forth in its pre-hearing brief. RIB at 111; SIB at 94-95. Complainant waived these theories by failing to assert them in its post-hearing brief. Ground Rule 14.2.

[58] This is different than the scenario where all the investments in a domestic industry product occurred in the United States. In that case, one could say the U.S. investments were significant on the grounds that there are not any foreign investments. Here, there are numerous other types of investments in the Domestic Industry Products that occur outside of the United States.

For these reasons, I find that Complainant did not meet its burden to show that the economic prong has been met under this theory.

### E. Conclusion

I find that Complainant has not shown that the economic prong of the domestic industry requirement is satisfied

## IX. CONCLUSIONS OF LAW

1. The importation or sale requirement of section 337 has been satisfied.

2. Commission Rule 210.12(a)(7) has been satisfied.

3. The [redacted] products, the BLF Accused Products, and the Defaulting Respondents' Accused Products infringe claims 5 and 21 of U.S. Patent No. 9,818,803.

4. The [redacted] products infringe claim 21 of U.S. Patent No. 9,818,803.

5. NIAs [redacted] do not infringe U.S. Patent No. 9,818,803.

6. The technical prong of the domestic industry requirement for U.S. Patent No. 9,818,803 has been satisfied.

7. Claims 1-4 and 21 of U.S. Patent No. 9,818,803 are not invalid under 35 U.S.C § 102 for anticipation.

8. Claims 5 and 21 of U.S. Patent No. 9,818,803 are not invalid under 35 U.S.C § 103 for obviousness.

9. The [redacted] products, the BLF Accused Products, and the Defaulting Respondents' Accused Products infringe claims 5, 10, 17, 40, and 41 of U.S. Patent No. 11,594,578.

10. The [redacted] product infringe claims 5, 10, 17, and 40 of U.S. Patent No. 11,594,578.

11. The [redacted] products infringe claims 5, 10, 40, and 41 of U.S. Patent No. 11,594,578.

12. NIAs [redacted] infringe claim 47 of U.S. Patent No. 11,594,578.

13. The technical prong of the domestic industry requirement for U.S. Patent No. 11,594,578 has been satisfied.

14. Claims 5, 10, 17, 40, 41, 45, and 47 of U.S. Patent No. 11,594,578 are not invalid under 35 U.S.C § 103 for obviousness.

15. U.S. Patent No. 11,594,578 is not invalid for lack of written description.

16. U.S. Patent No. 11,594,578 is not invalid for indefiniteness.

17. The [redacted] products, the BLF Accused Products, and the Defaulting Respondents' Accused Products infringe claims 15 and 16 of U.S. Patent No. 7,414,599.

18. The [redacted] products infringe claim 15 of U.S. Patent No. 7,414,599.

19. NIAs [redacted] do not infringe U.S. Patent No. 7,414,599.

20. The technical prong of the domestic industry requirement for U.S. Patent No. 7,414,599 has been satisfied.

21. Claims 2, 3, 13, 15, and 16 of U.S. Patent No. 7,414,599 are not invalid under 35 U.S.C § 103 for obviousness.

22. U.S. Patent No. 7,414,599 is not invalid under 35 U.S.C. § 112.

23. The [redacted] products and NIAs [redacted] do not infringe claim 6 of U.S. Patent No. 9,330,593.

24. The BLF Accused Products and the Defaulting Respondents' Accused Products infringe claim 6 of U.S. Patent No. 9,330,593.

25. The technical prong of the domestic industry requirement for U.S. Patent No. 9,330,593 has not been satisfied.

26. Claim 6 of U.S. Patent No. 9,330,593 is not invalid under 35 U.S.C § 103 for obviousness

27. U.S. Patent No. 9,330,593 is not invalid for lack of written description.

28. U.S. Patent No. 9,330,593 is not invalid for indefiniteness.

29. The economic prong of the domestic industry requirement has not been satisfied.

## X. RECOMMENDED DETERMINATION ON REMEDY AND BOND

The Commission's Rules provide that the administrative law judge shall issue a recommended determination concerning the appropriate remedy in the event the Commission finds a violation of section 337 and the amount of bond to be posted by respondents during Presidential review of any Commission remedies. *See* 19 C.F.R. § 210.42(a)(l)(ii).

### A. General Exclusion Order

Section 337(d)(2) provides that a general exclusion order ("GEO") may issue in cases where (a) a general exclusion from entry of articles is necessary to prevent circumvention of an exclusion order limited to products of named respondents; or (b) there is a widespread pattern of violation of Section 337 and it is difficult to identify the source of infringing products. 19 U.S.C. § 1337(d)(2). The statute essentially codifies Commission practice under *Certain Airless Paint Spray Pumps and Components Thereof*, Inv. No. 337-TA-90, Comm'n Op. at 18-19, USITC Pub. 119 (Nov. 1981) ("*Spray Pumps*"). *See Certain Neodymium-Iron-Boron Magnets, Magnet Alloys, and Articles Containing the Same,* Inv. No. 337-TA-372 ("*Magnets*"), Comm'n Op. on Remedy, the Public Interest and Bonding at 5 (USITC Pub. 2964 (1996)) (statutory standards "do not differ significantly" from the standards set forth in *Spray Pumps*). In *Magnets*, the Commission confirmed that there are two requirements for a general exclusion order: (1) a "widespread pattern of unauthorized use;" and (2) "certain business conditions from which one might reasonably infer that foreign manufacturers other than the respondents to the investigation may attempt to enter the U.S. market with infringing articles." *Id.* The focus now is primarily on the statutory language itself and not an analysis of the *Spray Pump* factors. *Ground Fault Circuit Interrupters and Prods. Containing Same*, Inv. No. 337-TA-615, Comm'n Op. at 25 (Mar. 9, 2009).

Complainant submits that a GEO is appropriate in this Investigation. CIB at 171. Respondents disagree. RIB at 112. Staff disagrees that a GEO is warranted for AMOLED displays manufactured for OEMs and used by the OEMs as replacement displays. SIB at 97. Staff asserts, however, that a GEO covering AMOLED displays that are not manufactured for OEMs and are instead sold on the aftermarket is warranted. *Id.* at 98.

**1. Circumvention of a Limited Exclusion Order**

Complainant argues that "[f]actors warranting a GEO to prevent LEO circumvention include 'expansive supply chains'; 'use of third parties to import and source the products'; 'sourcing imported accused products from domestic suppliers'; 'use of generic . . . packaging'; 'masking of identities and product sources'; 'Internet operations'; 'operat[ing] under multiple names'; and 'low barriers of entry and ease of replication of operations." CIB at 171 (quoting *Certain Luxury Vinyl Tile & Components Thereof*, Inv. No. 337-TA-1155, Comm'n Op. at 9-11 (Oct. 5, 2020).

Respondents assert that Complainant "has not alleged unsuccessful attempts to address infringement" and has not established that "any Respondent would evade an LEO." RIB at 113. Respondents note that "BOE voluntary intervened . . . and spent time and money developing redesigns." *Id.*

Staff supports a GEO issued for AMOLED displays that are not manufactured for OEMs and are instead sold on the aftermarket. SIB at 98. Staff does not, however point to any evidence that any respondent would circumvent the limited exclusion order.

The evidence does not demonstrate that a GEO is warranted due to circumvention of a limited exclusion order. BOE voluntarily intervened in this Investigation. Order No. 7 (Mar. 13, 2023), *not reviewed*, Comm'n Notice (Mar. 23, 2023). The BLF Respondents incurred expenses

to participate in this investigation. It is unlikely that these respondents would appear and expend resources to challenge Complainant's contentions if they intended to later circumvent any exclusion orders that may be entered. Nor is there evidence that the defaulting respondents would circumvent the limited exclusion order ("LEO"). While ten respondents defaulted, seven of these respondents filed Notices of Intent to Default. EDIS Doc. ID 795043 (Capitan Mobile Parts); EDIS Doc. ID 800042 (Electronics Universe d/b/a Fixez.com and Repairs Universe); EDIS Doc. ID 801052 (DFW Imports LLC d/b/a DFW Cellphone and Parts); EDIS Doc. ID 800907 (Parts4Cells Inc.); EDIS Doc. ID 801054 (Gadgetfix Corp.); EDIS Doc ID 800359 (LCTech International Inc. d/b/a SEGMobile.com); EDIS Doc. ID 801172 (eTech Parts Plus). Given that these seven entities made the effort to appear in the investigation and decided to default only due to cost, it is less likely that they would ignore LEOs. Additionally, the Commission has stated that evidence that a party defaulted is not alone sufficient to establish that a GEO is necessary to prevent circumvention of a limited exclusion order. *Certain Apparatus & Methods of Opening Containers*, Inv. No. 337-TA-1255, Comm'n Op. at 12 (May 6, 2022) ("While the Commission agrees that the Defaulting Respondents' ignoring of the proceedings below suggests future noncompliance with a LEO directed to them, the Commission notes that such evidence alone is insufficient to establish that a GEO is necessary to prevent circumvention of a LEO directed to respondents found in default.").

Complainant cites to *Certain Luxury Vinyl Tile & Components Thereof* for the proposition that the Commission considers various factors when determining the likelihood that a respondent will circumvent an LEO. In that investigation, however, the complainant sought a GEO against ten respondents who had defaulted. Comm'n Op. at 2. The situation is different when a majority of the respondents appeared in the investigation and many of those respondents participated. Additionally, in *Luxury Vinyl*, the Commission explained that "the Defaulting Respondents have

altered their corporate structures, changed their names or addresses, created new entities, or operated under multiple names." *Id.* at 9. Here, there is not evidence that respondents have attempted to evade identification by adopting such methods. Rather, Complainant's arguments rest on speculation and assumptions. *See, e.g.*, CIB at 171 (asserting that "Respondents could easily re-route Accused Products through these opaque supply chains").[59] I also note that Complainant does not make any specific allegations that the three respondents who defaulted and did not appear (Group Vertical, Sourcely Plus, and Mengtor) have shown any indication that they will attempt to circumvent the LEO.

For these reasons, I find that the evidence does not support a finding that a general exclusion order is necessary to prevent circumvention of an LEO directed to the Respondents.

**2. Widespread Pattern of Unauthorized Use**

Complainant asserts that "[t]he number of Respondents . . . and Accused Products . . . demonstrates a pattern of violation." CIB at 175. Complainant further asserts that "[s]upply chain complexity underscores the pattern" that "retailers sell Covered Products online from unidentified sources," "new infringers can easily enter the market," and that "attempts to evade Customs are common." *Id.*

[59] Complainant asserts that "certain Respondents have faced forfeiture actions involving Customs," but the document to which Complainant cites is from former respondent Mobile Defenders. CIB at 175 (citing CX-1105C.15). Additionally, the document indicates that Mobile Defenders believed that the forfeiture was based on a misunderstanding. CX-1105C.15 [redacted]

Respondents argue that "there cannot be widespread violation because SDC (the patentee), [redacted] and BOE (subject to LEO) manufacture around 90% of AMOLED displays." RIB at 112.

I find that there is not sufficient evidence to show a widespread pattern of unauthorized use with respect to AMOLED displays. Mr. Herrington testified that "[t]he manufacturers of AMOLED displays, or panels, for mobile devices are known, limited, and tracked extensively by industry analysts." RX-1085C (Herrington) at Q/A 193. He explained that, according to data produced by both Complainant and BOE, a [redacted] AMOLED display manufacturers "comprised over [redacted] of the market, based on units shipped." *Id.* at Q/A 194 (citing RX-0031C). [redacted] these display manufacturers are responsible for "[redacted] of the market for AMOLED displays for smartphones." *Id.* [redacted]. *Id.* Complainant did not cite to evidence to contradict this testimony. Thus, the evidence shows that [redacted] of AMOLED displays would be manufactured by entities that would not be subject to an LEO or would not have a legal right to practice the patents. Complainant has not shown how this amounts to a "*widespread* pattern of unauthorized use."

Nor does the evidence show that the manufactured AMOLED display products will be imported by companies other than the Respondents. Complainant asserts that the supply chains are opaque and that discovery "revealed [redacted] replacement-display suppliers." CIB at 171. The so-called "opaque" part of the supply chain relates to the entities that purchase manufactured AMOLED display products from manufacturers and sell them to distributors overseas. As BOE notes, the fact that this part of the supply chain may be opaque is irrelevant. What matters is whether the identity of the companies that import the AMOLED displays into the United States is

opaque. The evidence shows that it is not. Complainant's expert, Dr. Bazelon, favorably cited evidence that the Respondents in this Investigation are the "major – and possibly the only – distributors of Covered Products in the U.S." CX-1245C (Bazelon) at Q/A 10, 17. If this is true, then it is not possible for there to be a "widespread pattern" of other entities that would attempt to import infringing products into the United States. As Respondents note, "an LEO will cover both the source of replacement displays and their importation into the U.S." RRB at 48.

#### 3. Conclusion

For these reasons, I recommend against issuing a GEO.

### B. Limited Exclusion Order

If the Commission determines that a GEO is not warranted, Complainant requests that LEOs issue against each respondent. CIB at 171.

Respondents do not disagree that LEOs would be an appropriate remedy but indicate that "[a]ny LEO should be subject to . . . carve-outs, certifications, and tailoring." RIB at 112.

Staff asserts that "[i]f a violation is found, an LEO is warranted with respect to infringing AMOLED display modules and panels imported for use as replacement displays." SIB at 98. Staff also "submits that it would be appropriate to include" certification provisions which would allow an importer "to certify that the articles it seeks to import are not excluded from entry under the exclusion order" because there are redesigns adjudicated not to infringe and to "allow the importer to certify that a display is not being used as a replacement display." *Id.*

I recommend entry of an LEO. I further recommend that the LEO should include a certification provision. *See Certain Multiple Mode Outdoor Grills & Parts Thereof*, Inv. No. 337-TA-895, Comm'n Op. at 56 (Feb. 20, 2015) ("[I]t has been Commission practice for the past several years to include certification provisions in all exclusion orders to aid . . . CBP in enforcing

the Commission's remedial orders."). I do not, however, recommend that the LEO should specifically exempt redesigns, other non-infringing products, or licensed products or note that the exclusion order is limited to the patent(s)/claims(s) found to be infringed. Such exemptions are unnecessary, as these products can be certified to CBP as non-infringing. *See Certain Robotic Floor Cleaning Devices & Components Thereof*, Inv. No. 337-TA-1252, Comm'n Op. at 73 (Apr. 13, 2023) ("Nor does the Commission need to carve out an exemption for products that were adjudicated as non-infringing because those products would not be subject to the exclusion order and can be certified to CBP as non-infringing.").

#### 1. Limiting LEOs to Replacement Displays

Respondents further request that any exclusion order "be limited to replacement displays per the NOI and SDC's Amended Complaint and Public Interest Statements." RIB at 118. Specifically, "[d]isplays installed in downstream products or to be used for testing or other non-replacement purposes should be excluded." *Id.*

Complainant previously indicated that the plain language description of the accused products is "active matrix organic light-emitting diode ('AMOLED') display panels and modules used as replacement displays for mobile devices comprising organic pixel elements for presenting information to a viewer which infringe one or more claims of the Asserted Patents, and components thereof." 88 Fed. Reg. 7,463 (Feb. 3, 2023). As such, the scope of the investigation is limited to replacement displays. *See* CIB at 178 ("Any remedial order should cover the NOI's definition of 'covered articles,' encompassing replacement AMOLED displays (panels and modules) for mobile devices"). I therefore recommend that the exclusion order include a certification provision which would allow the importer to certify that a display is not being imported for use as a replacement display. *See Certain Automated Mech. Transmission Sys.*, Inv. No. 337-TA-503, Comm'n Op.,

2005 WL 8152027, at * 3 (May 9, 2005) ("[T]he scope of the remedy is dependent upon the scope of the investigation, which is determined by the notice of investigations.").

Respondents also assert that the Commission "should expressly carve-out testing by mobile device providers in the U.S." RIB at 119. I recommend that the Commission adopt such a carve-out. As Mr. Herrington explained:

> [I]n order to become a supplier of screens for OEM devices, I understand Respondent Mianyang BOE may need to manufacture sample display screens for OEM customers to test prior to purchasing. These screens would not be imported into the US for replacement purposes, but instead for testing and validation to determine whether they are suitable to be included as original displays in a particular type of OEM device.

RX-0005C (Herrington) at Q/A 68. Thus, such phones are not replacement displays and are not within the scope of the investigation. As noted above, I therefore recommend that the exclusion order include a certification provision which would allow the importer to certify that such displays are not being imported for use as a replacement display.

**2. License**

BOE asserts that [redacted] has a license to the Asserted Patents and therefore "[a]ny remedy should carve-out sales to or importations by [redacted]/other licenses." RIB at 114.

Complainant disagrees that BOE's display sales are licensed. CIB at 179. According to Complainant, "[t]he Agreement does not license third parties to supply components, let alone replacement components." *Id.*

I do not agree that the record supports a finding that [redacted] has a license to the Asserted Patents. [redacted]

BOE argues that and thus the Accused Products fall within the scope,[60] but BOE's argument is conclusory. RIB at 115. BOE does not cite to any law or evidence, other than the Agreement itself, regarding the scope of the agreement. *See Id.* at 114-115.

BOE does not introduce evidence that refutes this understanding of the agreement. Accordingly, BOE has not established that the provides a license to the BOE displays sold to

### C. Cease and Desist Orders

Section 337(f)(1) provides that the Commission may issue cease and desist orders ("CDO") to respondents found to be in violation. *See* 19 U.S.C. § 1337(f)(1).

#### 1. BLF Respondents

Complainant argues that CDOs are warranted against the BLF Respondents because each maintains commercially significant domestic inventory. CIB at 177. Staff agrees that "a CDO is appropriate against any BLF Respondent found in violation." SIB at 99.

---

60

The BLF Respondents stipulated that they maintain inventories of the Accused Products in the United States. *See* CX-1324C; CX-1325C; CX-1326C. Further, testimony from the corporate representatives for the BLF Respondents supports a finding that the inventory is significant. For example, Injured Gadget's corporate representative, [redacted], testified that Injured Gadget's "goal is to maintain a [redacted] amount of inventory." CX-1619C ([redacted] at 175:7-176:4. The representatives for Phone LCD Parts and Wholesale Gadgets provide similar testimony. *See* CX-1626C ([redacted] at 106:6-109:19 (testifying that Phone LCD Parts generally maintains [redacted]); CX-1605C ([redacted] at 141:9-17 (testifying that Wholesale Gadgets goal is to maintain [redacted]). As such, I recommend that CDOs issue against the BLF Respondents.

**2. Defaulting Respondents**

Complainant also seeks CDOs against the Defaulting Respondents. CIB at 177. When a party has been found in default, the Commission infers commercially significant domestic inventories or significant domestic operations with respect to the infringing articles. *Certain Plant-Derived Recombinant Serum Albumins ('rHsa") & Prods. Containing Same*, Inv. No. 337-TA-1238, Comm'n Op. at 66 (Oct. 11, 2022) ("In the case of named respondents in the United States who have been found in default or who have not participated in the investigation, the Commission has inferred commercially significant domestic inventories or significant domestic operations with respect to the infringing articles"). Accordingly, I recommend that CDOs issue against each of the Defaulting Respondents.

**3. BOE**

Finally, Complainant seeks a CDO against BOE. CIB at 177. Complainant notes that BOE maintains inventory through its related entity, BOE Technology America ("BOEA"). *Id.*

Complainant asserts that "BOEA supports Accused Product sales to [redacted] including through importing samples and discussions regarding meeting [redacted] technical specifications." *Id.*

BOE disputes that a CDO is necessary. RIB at 114. BOE notes that it [redacted] itself and that Complainant "is not entitled to a CDO simply because BOE has an affiliated company in the U.S." *Id.* BOE also argues that Complainant "fails to identify any evidence BOE would use its U.S. operations to undermine an exclusion order." *Id.*

Staff "does not view the extent and nature of BOEA's U.S. activities as being sufficient justification for a CDO." SIB at 99. Staff notes that Complainant "does not allege that BOEA sells, imports, or maintains inventories of replacement AMOLED displays for mobile devices." *Id.*

I find that Complainant has not established that CDOs should issue against BOE. Complainant does not cite to any evidence indicating the inventory levels in the United States. *See* CIB at 177. At most, the evidence shows that BOE has an affiliated company with a U.S. presence, but the evidence cited by Complainant does not demonstrate that this presence is "significant." *See* RX-1082C (Mu) at Q/A 5-9; CX-1069C (Mu) at 22:21-24:5, 140:2-142:16, 144:10-145:10, 162:14-22. Instead, the evidence supports the opposite conclusion: that BOE's presence in the U.S. is limited. *See* RX-1082C (Mu) at Q/A 5-9 (testimony that BOE does not have significant domestic operations in the U.S., that [redacted] to support accused devices, and that BOE Technology America [redacted]); CX-1069C (Mu) at 22:21-24:5, 140:2-142:16, 144:10-145:10, 162:14-22 (testimony indicating that BOE Technology America [redacted] and that [redacted]

[redacted]). As such, Complainant has not met its burden to demonstrate that a CDO is warranted against BOE.

It is therefore my recommendation that a CDO should issue in this Investigation against the BLF Respondents and the Defaulting Respondents but should not issue against BOE.

**D. Bond**

Complainant does not seek a bond.

**E. Public Interest**

In connection with this Recommended Determination, and pursuant to Commission Rule 210.50(b)(1), 19 C.F.R. § 210.50(b)(1), the Commission ordered that the presiding administrative law judge

> shall take evidence or other information and hear arguments from the parties or other interested persons with respect to the public interest in this investigation, as appropriate, and provide the Commission with findings of fact and a recommended determination on this issue, which shall be limited to the statutory public interest factors set forth in 19 U.S.C. 1337(d)(1), (f)(1), g(1).

Before issuing a remedy for a violation of section 337, the Commission must consider the effect of the remedy on the following public interest factors: (1) the public health and welfare; (2) competitive conditions in the U.S. economy; (3) the U.S. production of articles that are like or directly competitive with those that are the subject of the investigation; and (4) United States consumers. 19 U.S.C. §§ 1337(d)(1), f(1). The Commission begins this analysis with the understanding that the public interest favors the protection of intellectual property rights by excluding infringing products. *See, e.g.*, *Certain Magnetic Data Storage Tapes & Cartridges Containing the Same (II)*, Inv. No. 337-TA-1076, Comm'n Op. at 64 (June 20, 2019). It is rare for the Commission to determine that the public interest considerations outweigh the patent holder's rights. *See Spansion Inc. v. Int'l Trade Comm'n*, 629 F.3d 1331, 1360 (Fed. Cir. 2010). The

Commission can, however, tailor the remedy to minimize the impact on the public interest. *See, e.g.*, *Certain Personal Data & Mobile Commc'ns Devices & Related Software*, Inv. No. 337-TA-710, Comm'n Op. at 83 (delaying the effective date of an exclusion order based on competitive conditions in the U.S. economy).

Respondents do not argue that the public interest weighs against issuing any remedy. Instead, Respondents assert that "[t]he Commission should exercise its discretion to include a certification provision and carve-outs to protect the public interest." RIB at 115. Staff agrees. SIB at 103 ("If a violation is found, in the Staff's view public interest considerations favor certain carve-outs but do not favor denying relief entirely or delaying the effective date of an exclusion order"); *see also* SRB at 42.

**1. Public Health and Welfare**

In their pre-hearing brief, Respondents asserted that any remedial order would impede the health and welfare by reducing access to telemedicine and education. RPHB at 385. Respondents do not maintain this argument in their post-hearing brief.

Complainant contends that the public health and welfare would not be negatively impacted by a remedy. CIB at 180. Staff notes that any concern for consumers "is adequately addressed by the carve-outs . . . and the availability of the redesigned products." SIB at 103.

Respondents do not cite to any evidence that remedial orders would negatively impact the public health and welfare. Additionally, I am persuaded by Staff's argument that any such concerns could be adequately addressed by the repair carve out addressed below. It is therefore my recommendation that this factor does not weigh against the issuance of remedial orders.

### 2. Competitive Conditions in the United States Economy

Respondents do not address this factor. Complainant asserts that "[e]nforcing IP rights promotes competitive conditions in the economy." CIB at 180. Staff asserts that "reasonable substitutes for the excluded products will be available, as BOE has already designed around the patents." SIB at 104.

Respondents do not cite to any evidence that remedial orders would negatively impact the competitive conditions in the United States economy. It is therefore my recommendation that this factor does not weigh against the issuance of remedial orders.

### 3. Production of Like or Competitive Articles in the U.S.

Respondents do not address this factor. Complainant asserts that "consumers would continue to have many lawful sources of replacement displays" and notes that "there are no domestic display manufacturers." *Id.* Staff "is unaware of any evidence showing the production of like and competitive articles in the U.S. or that any such production will occur in the foreseeable future." SIB at 104. Staff therefore asserts that this factor "does not favor or disfavor denying or delaying relief the effective date of an exclusion order." *Id.*

Respondents do not cite to any evidence regarding this factor. It is therefore my recommendation that this factor does not weigh for or against the issuance of remedial orders.

### 4. Effect on U.S. Consumers

Complainant asserts that "the remedies will not adversely affect U.S. consumers." CIB at 180. Complainant states that "Respondents' contrary arguments lack evidentiary support and are predicated solely on incorrect speculation that the remedies will cause a supply shortfall, constrict consumer choice, and increase prices." *Id.*

Respondents argue that Complainant cannot meet demand. RIB at 115. Respondents further state: "Even assuming SDC had capacity to replace excluded displays, there is no evidence it would do so, let alone within a timeframe that would not harm U.S. consumers." *Id.* at 116. Respondents also note that "[i]f SDC eventually began to supply these replacement displays, the lack of alternative supply would drive up the price." *Id.* at 117. Finally, Respondents assert that the requested remedies "are contrary to the Right to Repair and would cause widespread non-performance of contracts and warranties." *Id.*

Staff asserts that Complainant's argument that it can satisfy demand "suffers from two flaws." SIB at 104. "First, SDC relies on an unreliable estimate that significantly undercounts the number of displays potentially excluded." *Id.* "Second, SDC has not shown that it has the capacity or willingness to undertake the design and customization efforts necessary for SDC to provide displays for mobile devices for which it does not already manufacture replacement displays." *Id.*

As an initial matter, I find that the following facts are undisputed: (1) "Internet access is very important" to United States consumers. Tr. (Bazelon) at 753:23-25: (2) "[T]here are some U.S. consumers whose only device to access the Internet is a smartphone." *Id.* at 754:6-9; (3) A damaged display "could prevent a U.S. consumer from using" their smartphone. *Id.* at 754:13-755:1; and (4) It is "beneficial to U.S. consumers to be able to repair their Smartphones by replacing damaged displays." *Id.*at 755:2-7. Taking these facts together, I find that it is in the public interest for U.S. consumers to have the ability to repair damaged displays. As such, it is necessary to consider whether U.S. consumers would have that ability if remedial orders were put into effect, whether the "right to repair" has an impact on the remedy, and whether the evidence shows that prices would increase if a remedy was implemented.

### a) Capacity to Replace Displays

The parties dispute whether U.S. consumers would have access to a sufficient supply of replacement displays if remedial orders were put into effect. There are several underlying factual issues involved in this analysis: (1) the number of displays that would be covered by an exclusion order; (2) whether Complainant would have sufficient manufacturing capacity to replace the displays covered by the exclusion order; and (3) whether any shortfall in the capacity of Complainant to replace the covered displays could be overcome in other ways.

#### i) Number of Covered Displays

Complainant estimates that approximately [redacted] products would be covered by a remedial order. Complainant bases this estimate on testimony from Dr. Bazelon, who stated that "U.S. demand for the Covered Products impacted by the requested remedial orders should be less than [redacted] displays annually." CX-1245C (Bazelon) at Q/A 16. Dr. Bazelon's estimate, however, excludes [redacted]. *Id.* at Q/A 11. The evidence shows, however, that BOE sells replacement displays to both [redacted]. CX-1635C (Kim) at Q/A 11; CX-3992C at 7-10. While the record does not include data regarding the number of such displays, it is apparent that Dr. Bazelon's estimate undercounts the displays that would be excluded if BOE was no longer permitted to provide replacement displays to entities [redacted] I therefore find that Dr. Bazelon's estimate of products that would be covered by a remedial order is unreliable.

Staff argues that "over 10.23 million replacement displays could be subject to the requested remedial orders." SIB at 107. Staff explains that "[i]n 2017, 50 million smartphone owners accidentally 'broke' their displays." *Id.* at 106 (citing CX-870.1). Staff notes that "[s]ixty-two percent – or 31 million – of smartphones with damaged displays were repaired." SIB at 106 (citing

CX-870.2). Staff further states that [redacted] *Id.* at 107. Thus, Staff asserts that [redacted] *Id.*

I am not persuaded that Staff's estimate is reliable either. The source upon which Staff relies indicates that 38% "of smartphone owners with a cracked screen don't get them fixed." CX-0870.2. This does not mean that 62% of consumers have their displays replaced, however. Instead, some of those consumers purchase an entirely new phone. Dr. Bazelon estimates that as much as 44%-64% of the 62% of consumers choose this option. CX-1245C (Bazelon) at Q/A 19-21; *see also* Tr. (Bazelon) at 776:4-6 (testifying that between 36-56% of consumers repair their display).

Respondents assert that a more accurate estimate would be that between 3.7 million and 7.7 million users replace their displays annually. *See* RIB at 116. Complainant does not set forth an argument for why this amount would be incorrect. CIB at 180-181 (asserting only that, under either estimate, it would have the capacity to fulfill replacement displays); CRB at 61-62. I therefore find that it is more accurate to say that approximately 3.7-7.7 million displays would be covered by any remedial order.

**ii) Complainant's Capacity to Supply Displays**

Complainant asserts that, regardless of the number of covered displays, it "has more than sufficient capacity to satisfy demand." CIB at 181. According to Complainant, it "had capacity to manufacture [redacted] *Id.*

Respondents doubt that Complainant's capacity information is accurate. Respondents assert that "SEC's Annual Business Reports show SDC is operating at 100% capacity for OLED panel manufacturing." RIB at 116. Respondents further note that the evidence upon which Dr. Bazelon relies is litigation-created and "includes estimates and assumption that make it impossible to determine SDC's planned capacity." *Id.* Respondents also assert that "there is no evidence" that Complainant would be able to replace excluded displays "within a timeframe that would not harm U.S. consumers." *Id.*[61]

Staff argues that "SDC has not shown that it has the capacity or willingness to undertake the design and customization efforts necessary for SDC to provide displays for mobile devices for which it does not already manufacture replacement displays." *Id.*

Even taking Complainant's capacity numbers at face value, the evidence shows that Complainant could not simply replace covered replacement displays with displays it has in inventory or is prepared to manufacture. *See* CX-1627C (Vander Veen) at Q/A 21 ("displays are manufactured to be used in particular mobile devices, and cannot be used interchangeably"). The evidence shows: [redacted]

[61] Respondents argue that there is evidence that Complainant [redacted] RIB at 116. Respondents' argument here is conclusory and is thus waived. Additionally, the only evidence cited by Respondents is the cross-examination of Dr. Bazelon. Such testimony was permitted over an objection, but only for impeachment purposes and was not to be used as substantive evidence. Tr. (Bazelon) at 765:13-768:19.

Accordingly, the evidence shows that there would be some delay in supplying replacement screens to U.S. consumers if a remedial order was entered, even if the evidence is not clear on the length of the delay.[62]

Further, there is no evidence that Complainant would agree to manufacture such displays. Complainant did not introduce any testimony from witnesses providing such assurances. *See* SIB at 108 ("There is no evidence that SDC (or even BOE with its redesigns) would be able to or willing to manufacture replacement displays for products for which it does not already manufacture displays").

I also find that the evidence does not conclusively show that Complainant has the capacity to replace displays.

---

Complainant asserts tha CRB at 63. Complainant does not provide its own estimate of the time it would take to begin supplying displays for these phones.

[redacted] Thus, the evidence is not sufficient for me to find that Complainant has the capacity to satisfy demand for replacement displays. *See, e.g.* Tr. (Bazelon) at 761:14-762:6 (acknowledging that most companies track their maximum existing capacity but that he did not ask Complainant for this information).[63]

**iii) Other Ways to Replace Covered Products**

Complainant suggests that, even if it were unable to replace the number of covered displays, any shortfall could be met in other ways. Specifically, Complainant asserts that: [redacted]

[63] [redacted]

[redacted]

There is not sufficient evidence to show that other companies could help to satisfy the demand for covered displays. [redacted]

Finally, the evidence does not demonstrate that consumers could obtain replacement displays from pulls, refurbished displays, and service packs. Complainant cites to evidence that,

[64] Complainant explains that pulls are "undamaged displays taken from one device and put in another," refurbished displays are "removed from damaged devices and refurbished," and "service packs" are "new replacement-display assemblies manufactured by or for OEMs and resold by third parties." CIB at 180 n. 12.

[redacted]. CRB at 64 (citing CX-1245C (Bazelon) at Q/A 13-14). The capacity of the Distributor Respondents is, however, irrelevant because, if an exclusion order is entered, the Distributor Respondents may not be able to sell these displays. *See* SIB at 108 ("[T]he pulls, service packs, and refurbished displays would only potentially fall outside of the exclusion order if the displays had been manufactured by SDC [redacted]"); *see* Tr. (Bazelon) at 783:5-784:5, 785:19-23 (testifying that pulls, refurbished screens, and service packs that include a display that was not manufactured by Samsung Display [redacted] would still be potentially covered by an exclusion order). Complainant does not cite to any evidence indicating how many of these displays fall into that category. Additionally, the record does not contain evidence that there are pulls, service packs, and refurbished displays for all of the models of displays that would be excluded.

Accordingly, I find that the evidence does not show that either Complainant or other entities would be able to fulfil the demand for replacement displays if remedial orders were entered.

**b) Right to Repair**

Respondents argue that "[t]o promote U.S. competition, President Biden prioritized the 'right to repair,' including limited repair restrictions on smartphones." RIB at 117. Respondents assert that "[t]he Requested Remedies in this Investigation are in opposition to public policy objectives promoted by [this] right to repair legislation." *Id.* Respondents also assert that remedial

[65] Complainant defines "Distributor Respondents" as: Captain Mobile Parts, DFW Imports, eTech Parts, Electronics Universe, Gadgetfix, Group Vertical, Injured Gadgets, LCTech, Mengtor, MobileSentrix, Mobile Defenders, Parts4Cells, Phone LCD Parts, Sourcely Plus, and Wholesale Gadget Parts. CIB at v.

orders "would result in limited access to and higher cost for replacement displays," such that "repair companies may be unable to meet warranty and insurance claims." *Id.* at 118. Thus, "warranty and insurance contracts Americans purchased to ensure their smartphones work" would be devalued. *Id.*

Complainant argues that "[t]he remedies are fully consistent with right-to-repair laws or policies." CIB at 183. Complainant states that "[t]he FTC has said 'assertion of IP rights does not appear to be a significant impediment to independent repair" and notes that the FTC "has never brought an enforcement action related to repair restrictions that would negate IP rights." *Id.* Finally, Complainant asserts that "the 'right to repair' must be considered alongside other policy goals, including U.S. interest in reducing supply-chain risks and dependence on China due to national security concerns and unfair trade practices by Chinese state-owned companies like BOE." *Id.*

Staff asserts that "any potential negative effects on the ability of U.S. consumers [to] purchase displays for self-repairs will be adequately mitigated by the proposed carve-outs and the potential availability of redesigns." SIB at 104 n. 14.

As noted above, it appears to be mostly undisputed that functioning smartphones are essential to U.S. consumers. The "right to repair" initiatives underline this fact. Respondents do not argue that the right to repair initiatives would prevent the ITC from entering remedies against display modules that are found to be infringing. I am therefore not persuaded that the right to repair separately weighs in favor of finding that remedies would adversely impact U.S. consumers.

#### c) Price Increase

Respondents assert that "SDC's prices are already higher than BOE." RIB at 116-117. According to Respondents, "[i]f SDC eventually began to supply these replacement displays, the lack of alternative supply would drive up the price." *Id.* at 117.

Complainant asserts that "[e]xcluding lower-priced infringing products is not a cognizable PI harm." CIB at 183. Complainant also states that "Respondents failed to substantiate the remedies would affect price." *Id.* at 183-184.

The evidence does not show that the price would necessarily increase if Complainant was able to manufacture a sufficient number of displays to replace the displays excluded by remedial orders. Respondents cite to Mr. Herrington, who testified that "increased prices will impact the entire supply chain, including OEM mobile device manufacturers, downstream distributors, independent repair shops, and the U.S. consumer." RX-0005 (Herrington) at Q/A 27. He further explained that "[i]t is a basic economic principle that, a decrease in the supply of a product, in the presence of unchanged consumer demand, results in higher prices." *Id.* at Q/A 37. Mr. Herrington did not, however, provide any specifics on the possible increase in price. As noted below, I recommend a carve-out to fulfill warranty and insurance contracts. Thus, the premise underlying Mr. Herrington's testimony may not come to fruition. As such, I do not find that a potential price increase weighs in favor of further modifying any remedial order.

#### d) Conclusion

For the reasons set forth above, it is my recommendation that this factor weighs against the issuance of remedial orders.

### 5. Scope and Duration of Remedial Orders

Because I recommend a finding that remedial orders would have a negative effect on U.S. consumers, I must also consider whether the scope of the duration of remedial orders could be modified to address this effect. Respondents suggest that I recommend certain carve-outs and delay the entry of any exclusion order.

#### a) Warranty Carve-Out

Respondents argue that "[i]f an exclusion order issues, the Commission . . . should grant an exemption to allow BOE and its customers to fulfill service and warranty obligations." RIB at 118. Staff agrees that such a carve-out is appropriate. SIB at 100.

Given the public interest factors discussed above, I recommend an exemption with respect to displays imported for replacement under existing warranties and insurance contracts, existing supply contracts to repair shops, and existing supply contracts to entities supplying replacement displays to U.S. consumers for "do-it-yourself" repairs. The evidence shows that such an exemption would alleviate burdens on consumers so that they have functioning devices. RX-0005C (Herrington) at Q/A 23, 27, 38, 54-55, 60, 67 (explaining that "[a] tailored exclusion order ensuring that OEMs, [redacted], may continue to receive AMOLED displays for mobile devices in order to meet the needs of their warranty customers will ease the burden on U.S. consumers who have purchased extended warranties").

#### b) Delay of Remedial Order

Respondents also request that the Commission "delay entry of any exclusion order." RIB at 119. According to Respondents, "[a] delay is warranted given BOE's reliance on the NIAs, particularly since SDC does not argue the redesigns infringe three of the four patents." *Id.* at 120.

Complainant argues that "[d]elayed enforcement is . . . unwarranted." CIB at 179. Complainant states: "BOE has not specified the length of delay it seeks, alleged a material number of consumers would benefit, or identified products or customers for its redesign concepts." *Id.*

Staff does not believe that a delay is necessary "given that BOE has already redesigned around the Asserted Patents and in view of the carve-outs" recommended by Staff. SIB at 101.

As Staff notes, Respondents do not state how long of a delay would be necessary. Additionally, I believe that any harm to the public interest will be mitigated by the carve-outs I already recommended. Accordingly, I do not recommend a delay in the effective date of any exclusion order.

## XI. INITIAL DETERMINATION ON VIOLATION

For the reasons set forth above, it is my Initial Determination that no violation of section 337 of the Tariff Act, as amended, has occurred in the importation into the United States, the sale for importation, or the sale within the United States after importation of certain active matrix organic light-emitting diode display panels and modules for mobile devices, and components thereof.

I hereby certify to the Commission this Initial Determination and the Recommended Determination.

The Secretary shall serve the confidential version of this Initial Determination upon counsel who are signatories to the Protective Order (Order No. 1) issued in this investigation. A public version will be served at a later date upon all parties of record.

Pursuant to 19 C.F.R. § 210.42(h), this Initial Determination shall become the determination of the Commission unless a party files a petition for review pursuant to 19 C.F.R. §

210.43(a) or the Commission, pursuant to 19 C.F.R. § 210.44, orders on its own motion a review of the Initial Determination or certain issues therein.

## XII. ORDER

Within seven days of the date of this document, the parties shall jointly submit a single proposed public version of this document with any proposed redactions indicated in red. If the parties submit excessive redactions, they may be required to provide declarations from individuals with personal knowledge, justifying each proposed redaction and specifically explaining why the information sought to be redacted meets the definition for confidential business information set forth in 19 C.F.R. § 201.6(a). To the extent possible, the proposed redactions should be made electronically, in a single PDF file using the "Redact Tool" within Adobe Acrobat. The proposed redactions should be submitted as "marked" but not yet "applied." The proposed redactions should be submitted via email to Moore337@usitc.gov and not filed on EDIS.

Bryan F. Moore
Administrative Law Judge