AO 120 (Rev. 08/10)

TO:	Mail Stop 8 Director of the U.S. Patent and Trademark Office P.O. Box 1450 Alexandria, VA 22313-1450	REPORT ON THE FILING OR DETERMINATION OF AN ACTION REGARDING A PATENT OR TRADEMARK

In Compliance with 35 U.S.C. § 290 and/or 15 U.S.C. § 1116 you are hereby advised that a court action has been filed in the U.S. District Court Eastern District of Texas on the following

☐ Trademarks or ☑ Patents. (☐ the patent action involves 35 U.S.C. § 292.):

DOCKET NO.	DATE FILED 12/15/2022	U.S. DISTRICT COURT Eastern District of Texas
PLAINTIFF COBBLESTONE WIRELESS, LLC		DEFENDANT AT&T INC., AT&T SERVICES INC., AT&T MOBILITY LLC, AND AT&T CORP.

PATENT OR TRADEMARK NO.	DATE OF PATENT OR TRADEMARK	HOLDER OF PATENT OR TRADEMARK
1 8,891,347	11/18/2014	COBBLESTONE WIRELESS, LLC
2 9,094,888	7/28/2015	COBBLESTONE WIRELESS, LLC
3 10,368,361	7/30/2019	COBBLESTONE WIRELESS, LLC
4 8,554,196	10/8/2013	COBBLESTONE WIRELESS, LLC
5		

In the above—entitled case, the following patent(s)/ trademark(s) have been included:

DATE INCLUDED	INCLUDED BY ☐ Amendment ☐ Answer ☐ Cross Bill ☐ Other Pleading	
PATENT OR TRADEMARK NO.	DATE OF PATENT OR TRADEMARK	HOLDER OF PATENT OR TRADEMARK
1		
2		
3		
4		
5		

In the above—entitled case, the following decision has been rendered or judgement issued:

DECISION/JUDGEMENT

CLERK	(BY) DEPUTY CLERK	DATE

Copy 1—Upon initiation of action, mail this copy to Director **Copy 3—Upon termination of action, mail this copy to Director**
Copy 2—Upon filing document adding patent(s), mail this copy to Director **Copy 4—Case file copy**

Print Save As... Reset

Trials@uspto.gov
571-272-7822

Paper 16
Date: June 24, 2024

UNITED STATES PATENT AND TRADEMARK OFFICE

BEFORE THE PATENT TRIAL AND APPEAL BOARD

SAMSUNG ELECTRONICS AMERICA, INC., AND SAMSUNG ELECTRONICS CO., LTD.,
Petitioner,

v.

COBBLESTONE WIRELESS, LLC,
Patent Owner.

IPR2024-00319
Patent 8,891,347 B2

Before NATHAN A. ENGELS, NORMAN H. BEAMER, and RUSSELL E. CASS, *Administrative Patent Judges.*

CASS, *Administrative Patent Judge*.

DECISION
Denying Institution of *Inter Partes* Review
35 U.S.C. § 314

I. INTRODUCTION

A. Background

Samsung Electronics America, Inc., and Samsung Electronics Co., Ltd. (collectively, "Petitioner") filed a Petition requesting an *inter partes* review of claims 1–4, 6–12, 14–17, and 19–23 of U.S. Patent No. 8,891,347 B2 (Ex. 1001, "the '347 patent"). Paper 3 ("Pet."), 3. Cobblestone Wireless, LLC ("Patent Owner") filed a Preliminary Response. Paper 13 ("Prelim. Resp."). With our permission, Petitioner filed a Preliminary Reply (Paper 14), and Patent Owner filed a Preliminary Sur-reply (Paper 15).

An *inter partes* review may not be instituted unless it is determined that "the information presented in the petition filed under section 311 and any response filed under section 313 shows that there is a reasonable likelihood that the petitioner would prevail with respect to at least 1 of the claims challenged in the petition." 35 U.S.C. § 314 (2018); *see also* 37 C.F.R § 42.4(a) (2021) ("The Board institutes the trial on behalf of the Director."). The reasonable likelihood standard is "a higher standard than mere notice pleading," but "lower than the 'preponderance' standard to prevail in a final written decision." *Hulu, LLC v. Sound View Innovations, LLC*, IPR2018-01039, Paper 29 at 13 (PTAB Dec. 20, 2019) (precedential).

For the reasons provided below and based on the record before us, we determine that Petitioner has not established a reasonable likelihood that any of the challenged claims are unpatentable. Accordingly, we do not institute an *inter partes* review based on the Petition.

B. Real Parties in Interest

Petitioner identifies Samsung Electronics America, Inc. and Samsung Electronics Co., Ltd. as real parties in interest. Pet. 73. Petitioner also states that, "[o]ut of an abundance of caution and to avoid additional issues associated with real parties-in-interest, Petitioner[] likewise identif[ies] T-Mobile USA, Inc., AT&T Services Inc., AT&T Corp., AT&T Mobility LLC, and Cellco Partnership d/b/a Verizon Wireless because Petitioner['s] products are accused of infringement in their respective patent infringement actions." *Id.* at 73–74. Patent Owner names itself as the real party in interest. Paper 7, 2.

C. Related Proceedings

Both parties identify, as matters involving or related to the '347 patent, the following district court proceedings: *Cobblestone Wireless, LLC v. T-Mobile USA, Inc.*, No. 2:22-cv-00477 (E.D. Tex.); *Cobblestone Wireless, LLC v. Cellco Partnership d/b/a Verizon Wireless*, No. 2:22-cv-00478 (E.D. Tex.); *Cobblestone Wireless, LLC v. AT&T Inc.*, No. 2:22-cv-00474 (E.D. Tex.); and *Cobblestone Wireless, LLC v. Samsung Electronics Co.*, No. 2:23-cv-00285 (E.D. Tex.). Pet. 74; Paper 7, 2. Also, T-Mobile USA, Inc., AT&T Services Inc., AT&T Corp., AT&T Mobility LLC, Cellco Partnership d/b/a Verizon Wireless, Nokia of America Corporation, and Ericsson Inc. filed a petition on December 4, 2023, challenging the '347 patent in IPR2024-00136.

D. The '347 Patent (Ex. 1001)

The '347 patent relates to a method for wireless communication in a system including a transmitter, a receiver, and multiple propagation paths formed between the transmitter and the receiver that are capable of carrying

a signal transmitted by the transmitter to the receiver. Ex. 1001, code (57). The method performs a channel estimation of a first signal from the transmitter on one propagation path to obtain parameter information on the propagation path, predistorts a second signal at the transmitter according to the channel estimation, and transmits the predistorted signal from the transmitter to the receiver via the propagation path. *Id.*

A schematic representation of a wireless communication system capable of performing the claimed method is shown in Figure 1, reproduced below.

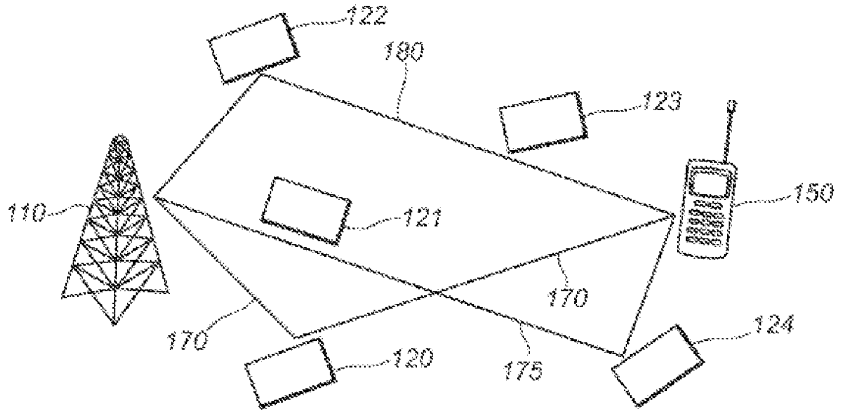

FIG. 1

Figure 1 is a schematic representation of a wireless communication system capable of performing the claimed method. Ex. 1001, Fig. 1, 2:45–47.

As the ’347 patent explains, Figure 1 “illustrates a single-link communication scenario between a base station which is configured so as to act as a transmitter 110 and a mobile station which is configured so as to act as a receiver 150.” Ex. 1001, 3:23–26. Between transmitter 110 and receiver 150 “are a number of buildings 120–124, which act as scatterers and bouncing points of communication signals traveling between the transmitter 110 and the receiver 150 via propagation paths 170, 175, and 180.” *Id.* at

3:26–30. These propagation paths "are different in delay, direction of arrival, direction of departure and Doppler frequency," and the signals traveling along these paths "experience different distortions" so that the same signal traveling along these paths "may arrive at the receiver with different phases." *Id.* at 3:47–50, 7:44–46. As a result, "[t]he resulting multiple replica of the originally transmitted signals are added at the receiver 150, either destructively or constructively." *Id.* at 7:47–49.

The '347 patent explains that "[t]ypically, equalization techniques known in the art are used in the receivers 150 to recover the original transmitted signal by removing the distortions." Ex. 1001, 7:50–52. "[U]nlike the equalization technique which corrects the distortion at the receiver 150 after receiving the technique," the system of the '347 patent "adds a pseudo 'distortion' before the signals are transmitted at the transmitter 110." *Id.* at 7:63–67. "These 'pre-distorted' signals," the '347 patent explains, "are then transmitted in such a way that the signal distortion can be successfully removed while propagating." *Id.* at 7:67–8:3.

The '347 Patent's pre-distortion process is shown in more detail in Figure 4, reproduced below.

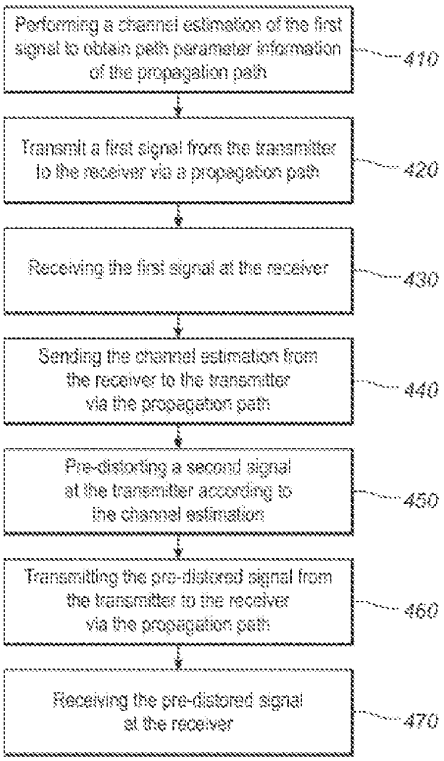

FIG. 4

As shown in Figure 4, the system first performs a channel estimation of the first signal to obtain path parameter information of the propagation path (step 410). Ex. 1001, Fig. 4, 8:4–7. Next, the transmitter transmits a first signal to the receiver via a propagation path (step 420). *Id.* at Fig. 4, 8:7–9. The receiver receives the first signal and performs a channel estimation algorithm to obtain estimates of the delay, Doppler frequency, direction of arrival, direction of departure, and complex amplitude for each of the propagation paths (step 430). *Id.* at Fig. 4, 8:11–16. The receiver then sends the channel estimation to the transmitter via the propagation path. *Id.* at Fig. 4, 9:1–3. Then, for the next frame or block to transmit, the transmitter "pre-distorts" a second signal and generates multiple signal replica with

appropriate settings of the transmitting time, transmitting pace and directions, receiving directions, and complex weight of the signal (step 450). *Id.* at Fig. 4, 9:6–10. The transmitter sums up and transmits these "pre-distorted" signal replica (step 460), which are received by the receiver (step 470). *Id.* at Fig. 4, 9:12–14.

E. Claim 1

Of challenged claims 1–4, 6–12, 14–17, and 19–23, claims 1, 8, 15, and 19 are independent. Challenged claim 1 is illustrative, and is reproduced below.

> [1.0] A method for wireless communication in a system including a transmitter, a receiver, and a plurality of propagation paths formed between the transmitter and the receiver which are capable of carrying a signal transmitted by the transmitter to the receiver, the method comprising:
>
> [1.1] transmitting a first signal from the transmitter to the receiver via a first propagation path of the plurality of propagation paths;
>
> [1.2] receiving the first signal at the receiver;
>
> [1.3] performing channel estimation based on the first signal to obtain path parameter information of the first propagation path;
>
> [1.4] sending the channel estimation that includes the path parameter information from the receiver to the transmitter via the first propagation path;
>
> [1.5] predistorting a second signal at the transmitter in a time domain, a frequency domain, and a spatial domain, according to the channel estimation based on the first signal;
>
> [1.6] transmitting the predistorted second signal from the transmitter to the receiver via the first propagation path; and
>
> [1.7] receiving the predistorted second signal at the receiver.

Ex. 1001, 16:40–61 (indents and bracketed paragraph identifiers added).

F. Applied References

Petitioner relies upon the following references:

> Stefania Sesia, "LTE: The UMTS Long Term Evolution from Theory to Practice," Second Edition, published by Wiley (Ex. 1003, "Sesia");
>
> Forenza, US 8,654,815 B1, issued Feb. 18, 2014 (Ex. 1014, "Forenza").

Pet. iii–iv, 3. Petitioner submits declarations from Kevin C. Almeroth, Ph.D (Ex. 1005) and Sylvia Hall-Ellis (Ex. 1004).

G. Asserted Ground of Unpatentability

Petitioner challenges the patentability of claims 1–4, 6–12, 14–17, and 19–23 of the '347 patent on the following grounds:

Claim(s) Challenged	35 U.S.C. §	Reference(s)/Basis
1–4, 6–12, 14–17, 19–23	103(a)[1]	Sesia
1–4, 6–12, 14–17, 19–23	103(a)	Forenza

Pet. 3.

[1] The Leahy-Smith America Invents Act, Pub. L. No. 112-29, 125 Stat. 284 (2011) ("AIA"), included revisions to 35 U.S.C. § 103 that became effective after the filing of the application for the '136 patent. For purposes of this Decision, we apply the pre-AIA version of 35 U.S.C. § 103.

II. DISCUSSION

A. Principles of Law

With respect to claim construction, a claim "shall be construed using the same claim construction standard that would be used to construe the claim in a civil action under 35 U.S.C. § 282(b)." 37 C.F.R. § 42.100(b).

A claim is unpatentable under 35 U.S.C. § 103 if "the differences between the subject matter sought to be patented and the prior art are such that the subject matter as a whole would have been obvious at the time the invention was made to a person having ordinary skill in the art to which said subject matter pertains." *KSR Int'l Co. v. Teleflex Inc.*, 550 U.S. 398, 406 (2007). The question of obviousness is resolved on the basis of underlying factual determinations, including (1) the scope and content of the prior art; (2) any differences between the claimed subject matter and the prior art; (3) the level of skill in the art; and (4) where in evidence, objective evidence of non-obviousness.[2] *Graham v. John Deere Co. of Kansas City*, 383 U.S. 1, 17–18 (1966). When evaluating a combination of teachings, we must also "determine whether there was an apparent reason to combine the known elements in the fashion claimed by the patent at issue." *KSR*, 550 U.S. at 418 (citing *In re Kahn*, 441 F.3d 977, 988 (Fed. Cir. 2006)). Whether a combination of prior art elements would have produced a predictable result weighs in the ultimate determination of obviousness. *Id.* at 416–417.

In an *inter partes* review, the petitioner must show with particularity why each challenged claim is unpatentable. *Harmonic, Inc. v. Avid Technology, Inc.*, 815 F.3d 1356, 1363 (Fed. Cir. 2016); 37 C.F.R.

---

[2] At this stage of the proceeding, Patent Owner has not presented objective evidence of non-obviousness.

§ 42.104(b). The burden of persuasion never shifts to Patent Owner. *Dynamic Drinkware, LLC v. Nat'l Graphics, Inc.*, 800 F.3d 1375, 1378 (Fed. Cir. 2015).

We analyze the challenges presented in the Petition in accordance with the above-stated principles.

B. Level of Ordinary Skill in the Art

Relying on Dr. Almeroth, Petitioner argues that one of ordinary skill "would have had at least a bachelor's degree in electrical engineering, computer engineering, computer science, physics, or the equivalent, and at least two years of experience working in the field." Pet. 6 (citing Ex. 1005 ¶ 41). Petitioner further states that "[r]elevant work experience would include experience with cellular telecommunications and networking, radio-access network architectures, protocols, and signal propagation in wireless networks," and that "[m]ore education can supplement practical experience and vice versa." *Id.*

At this stage of the proceeding, Patent Owner does not set forth a proposed level of ordinary skill in the art. *See* Prelim. Resp.

For purposes of this Decision, we adopt the assessment of the level of ordinary skill in the art proposed by Petitioner and not disputed by Patent Owner as reasonable and consistent with the prior art. *See Okajima v Bourdeau*, 261 F.3d 1350, 1355 (Fed. Cir 2001) (the prior art may reflect an appropriate level of skill in the art).

C. *Ground 1:*[3] *Asserted Obviousness of Claims 1–4, 6–12, 14–17, and 19–23 Based on Sesia*

Petitioner contends that claims 1–4, 6–12, 14–17, and 19–23 would have been obvious over Sesia. Pet. 3, 28–57. Patent Owner disagrees. Prelim. Resp. 2–21.

1. *Overview of Sesia (Ex. 1003)*

Sesia is a book entitled "LTE – The UMTS Long Term Evolution From Theory to Practice," authored by Stefani Sesia, Issam Toufik, and Matthew Baker, and published by Wiley with a copyright date of 2011. Ex. 1003, 1, 6.[4] Sesia explains that it "provides a thorough, authoritative and complete tutorial of the LTE system, now fully updated and extended to include LTE-Advanced," and "gives a detailed explanation of the advances made in our theoretical understanding and the practical techniques that will ensure the success of this ground-breaking new radio access technology." *Id.* at 29. One aim of Sesia is "to chart an explanatory course through the LTE specifications, to support those who design LTE equipment." *Id.* at 32.

Sesia discloses the use of a base station (also referred to as an eNodeB) in communication with one or more mobile devices or user equipment (UE). Ex. 1003, 480. Sesia illustrates in Figure 20.1, reproduced below, a base station with an omnidirectional antenna that transmits a signal along three different propagation paths, shown as Path 1, Path 2, and Path 3.

---

[3] Here, and elsewhere in the Decision, the identification of the grounds using designations such as "Ground 1" and "Ground 2" refers to the designation of the grounds as presented in the Petition.

[4] The cited pages of Sesia refer to the page numbers added by Petitioner, not the original pages in the book.

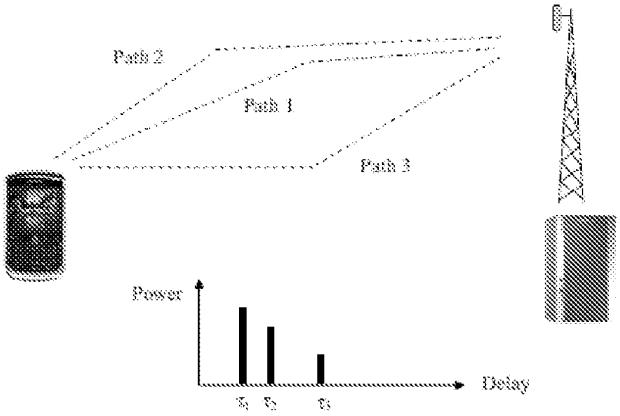

Figure 20.1: Multipath propagation and PDP.

Sesia's Figure 20.1 shows a base station (right) with an antenna that transmits a signal along three propagation paths, Path 1, Path 2, and Path 3. Ex. 1003, 480–481.

Sesia explains that, as shown in Figure 20.1, "[t]he transmitted signal traverses three paths with different delays." *Id.* at 480.

Sesia also explains that LTE "is a coherent communication system," meaning that its detection method "exploits channel knowledge." Ex. 1003, 207–208. "Coherent detection," Sesia states, "can make use of both amplitude and phase information carried by the complex signals, and not of only amplitude information as with non-coherent detection." *Id.* at 207. "Optimal reception by coherent detection," according to Sesia, "typically requires accurate estimation of the propagation channel." *Id.* "A common and simple way to estimate the channel is to exploit known signals which do not carry any data" and, "[i]n order to estimate the channel as accurately as possible, all correlations between channel coefficients in time, frequency and space should be taken into account." *Id.* at 208. LTE can use reference signals embedded into a transmitted signal to perform these estimations. *Id.* at 208–209.

Sesia also includes sections describing "frequency-domain channel estimation," "time-domain channel estimation," and "spatial-domain channel estimation." Ex. 1003, 220–227. Sesia discloses that a UE can report these channel estimations to an eNodeB using implicit feedback, which "provides an implicit representation of the channel consisting of an indication of the data rate that could be achieved if the eNodeB used a certain precoder." *Id.* at 316, 704. This can be compared to "explicit feedback," which is "not supported in LTE or LTE-Advanced," in which "a UE would instead explicitly report a quantized representation of the physical CSI [(Channel State Information)] without making assumptions about the nature of the eNodeB precorder." *Id.* at 705. Sesia further discloses that LTE supports beamforming techniques. *Id.* at 295–298.

2. Analysis of Independent Claim 1

For the reasons discussed below, we determine, based on the present record, that Petitioner has not made a sufficient showing for limitations [1.3] and [1.5] for purposes of institution.

a) [1.3] performing a channel estimation based on the first signal to obtain path parameter information of the first propagation path;

Petitioner bases its argument as to this limitation on a construction of the term "path parameter information" that it represents is "Patent Owner's apparent interpretation of" this term "in the co-pending district court litigations" based on Patent Owner's infringement contentions, although it acknowledges that "Patent Owner has not formally provided [a] proposed construction[]" of this term. Pet. 10.

More specifically, Petitioner argues that "[i]n the co-pending district court litigation, Patent Owner interprets 'path parameter information'

broadly to capture any channel state information feedback, regardless of whether that channel state information is an explicit or implicit channel estimation." Pet. 11. However, although Petitioner relies on this construction, Petitioner also criticizes the construction, asserting that "the ['347] patent ***expressly excludes*** implicit estimation from path parameter information." *Id.* (emphasis added). Petitioner also does not assert that Patent Owner's purported construction represents the plain and ordinary meaning of the claim language, and Petitioner indeed suggests otherwise by characterizing this construction as a "broad interpretation" and distinguishing it from other terms "not expressly construed" which "should be given their ordinary and customary meaning." *Id.* at 10–12. In its claim construction discussion, Petitioner does not offer alternative constructions but instead exclusively relies on the construction it ascribes to Patent Owner and criticizes. *Id.*

Petitioner further introduces the testimony of Dr. Almeroth that the construction it relies on in this proceeding (based on its interpretation of Patent Owner's infringement contentions) "is construing 'path parameter information' ***broader than, and contrary to its plain and ordinary meaning***." Ex. 1005 ¶ 63 (emphasis added). Dr. Almeroth states that the proposed construction "include[s] any channel state information feedback, regardless of whether that channel state information is an explicit or implicit channel estimation," but "[a]n implicit estimation is not path parameter information as a [person of ordinary skill in the art] would understand the term in the '347 [p]atent." *Id.* (citing Ex. 1001, 11:60–12:6, 14:18–21; Ex. 1006, 7–8, Ex. 1009, 7–8; Ex. 1010, 7–8; Ex. 1015, 6–7). According to Dr. Almeroth, this is because the '347 patent distinguishes between "path

parameter information" and "codebooks," which he states "is an implicit measurement because conditions of the channel may be implied by the value of the codebook." *Id.* ¶ 64. "Thus," Dr. Almeroth testifies, one of ordinary skill "would understand that implicit measurements can be used to 'imply' the condition of the path but are not measurements of the path itself." *Id.*

When applying Sesia to limitation [1.3], Petitioner makes clear that it is relying on Patent Owner's purported construction of "path parameter information." Pet. 34–36. Specifically, Petitioner asserts that:

> Based on Sesia's disclosure, a [person of ordinary skill in the art] would understand, ***under Patent Owner's apparent interpretation of the claims***, that the information that is obtained from performing channel estimation on a reference signal and subsequently provided to the eNodeB by the UE as either implicit or explicit feedback corresponds with the claimed "path parameter information." Furthermore, ***under Patent Owner's apparent interpretation of the claims***, based on Sesia's disclosure, a [person of ordinary skill in the art] would understand that this information is 'path parameter information of the first propagation path" given that channel estimation attempts to define the channel model of a propagation path.

Id. at 35 (emphasis added) (citing Ex. 1005 ¶ 135); *see* Ex. 1005 ¶ 135 (explaining that Sesia discloses "path parameter information" "under the Patent Owner's apparent interpretation of the claims"). At the end of the discussion of this claim element, Petitioner states that Sesia discloses or teaches the claim language "under either Patent Owner's apparent interpretation ***or the plain and ordinary meaning of the term***," but Petitioner never explains what the plain and ordinary meaning of the term is, or how that plain and ordinary meaning is disclosed by Sesia. Pet. 36 (emphasis added); *see id.* at 11–12 (discussing only Patent Owner's purported construction in the claim construction section); Ex. 1005 ¶ 137

(repeating Petitioner's statement that Sesia discloses "path parameter information" "under either Patent Owner's apparent interpretation or the plain and ordinary meaning of the term," but not explaining what the plain and ordinary meaning is).

To support its reliance on Patent Owner's purported construction of "path parameter information," Petitioner cites several cases for the proposition that a petition may rely on a claim construction from Patent Owner that the petitioner subjectively believes is incorrect. Pet. 10. For example, Petitioner cites *10X Genomics, Inc. v. Bio-Rad Labs., Inc.*, IPR2020-00086, Paper 8 at 17–22 (PTAB Apr. 27, 2020) for the proposition that 37 C.F.R. § 42.104(b) "does not prohibit Petitioner from submitting a claim construction it believes is incorrect and relying on that construction to show how the claim is unpatentable." *Id.* Petitioner also relies on *Donnelly Distribution LLC v. Russo Trading Co., Inc.*, IPR2019-00761, Paper 8 at 17–18 (PTAB Sept. 6, 2019). *Id.*

In its Preliminary Reply, Petitioner again argues that it is permissible for a petitioner to rely on a claim construction that it subjectively disagrees with, and Petitioner disputes that "by disagreeing with these constructions, Patent Owner is entitled to the extreme remedy of discretionary denial for failure to satisfy Rule 42.104(b)(3)." Prelim. Reply 1–3. Specifically, Petitioner cites *Philip Morris Products, S.A. v. Rai Strategic Holdings, Inc.*, IPR2020-00921, Paper 13 at 42–44 (PTAB Aug. 5, 2021) for the proposition that Rule 42.104(b)(3) "does not require a petitioner to express a subjective belief in the correctness of its proffered claim constructions" and that a petitioner can "rely[] on claim constructions that it believes are incorrect." *Id.* at 1–2. Petitioner also cites additional cases for this proposition,

including *Google LLC V. AGIS Software Development, LLC*, IPR2018-01085, Paper 10 at 10 (PTAB Nov. 19, 2018); *General Electric Co. v. Vestas Wind Sys. A/S*, IPR2018-00928, Paper 9 at 12–17 (PTAB Nov. 5, 2018); *Apple, Inc. v. AGIS Software Development, LLC*, IPR2018-00821, Paper 9 at 10 (PTAB Oct. 23, 2018). *Id.* at 2.

Patent Owner responds that the Petition "rests on an infirm foundation" because Petitioner raises an invalidity ground "that they state solely and exclusively relies upon Patent Owner's alleged claim construction positions" and "make[s] clear ***in the Petition, that they believe the sole construction[] they rely on [is] dead wrong***." Prelim. Resp. 2 (emphasis in original). Patent Owner argues that "the Board's caselaw, and the Office's policy make clear" that "a petitioner cannot demonstrate a reasonable likelihood of prevailing based on constructions it expressly disagrees with in its petition." *Id.* at 2–3. Patent Owner further argues that, "at least as to limitation 1.3, Petitioner[] rel[ies] on a claim interpretation that ***no one*** agrees with" and that "Patent Owner's actual claim construction positions are different from the strawman construction that Petitioner[] ha[s] relied upon." *Id.* at 3. Patent Owner distinguishes the Petition from situations where a petitioner "explain[s] why a claim is invalid under alternative claim constructions, *e.g.*, its proposed construction and a construction proffered by the patent owner." *Id.* at 2.

Patent Owner also cites Board decisions for the proposition that "a petitioner cannot satisfy its burden of proof under constructions it insists are wrong." Prelim. Resp. 6. For example, Patent Owner cites *Hologic, Inc. v. Enzo Life Sciences, Inc.*, IPR2018-00019, Paper 21 (PTAB Nov. 28, 2018) for the proposition that a petitioner "does not satisfy Rule 42.104(b)(3)

when, in a proceeding applying the *Philips* claim-construction standard, it 'expressly disagree[s] with its proffered constructions.'" *Id.* at 7 (citing *Hologic* at 2, 5–7) (alteration in original). Patent Owner also cites additional cases in support of this proposition. *Id.* at 9–10 (citing *Orthopediatrics Corp. v. K2M, Inc.*, IPR2018-01548, Paper 9 at 9–10 (PTAB Mar. 1, 2019) (denying institution where "Petitioner's contentions are limited to how the claims at issue should not be construed" (emphasis omitted)), *Samsung Elecs. of Am., Inc. v. Uniloc 2017 LLC*, IPR2020-00046, Paper 6 at 10 (PTAB Apr. 1, 2020) ("We exercise our discretion and decline Petitioner's invitation to adopt allegedly incorrect claim constructions and institute an *inter partes* review on the basis of those constructions."), and *Netflix, Inc. v. GoTV Streaming, LLC*, IPR2023-00757, Paper 18 at 9 ("In *Hologic*, the Board decided that a party in an Office proceeding may not 'expressly disagree' with a claim-construction position in the proceeding and still advance the disagreed-with position in the proceeding.")).

Based on the present record, Petitioner has not demonstrated a reasonable likelihood that the challenged claims are unpatentable. Petitioner bases its showing as to limitation [1.3] upon a claim construction of "path parameter information" that it ascribes to Patent Owner, and then expressly criticizes as being inconsistent with the '347 patent Specification. Pet. 14–15. Additionally, Petitioner does not assert that the applied construction is the plain and ordinary meaning of the claim term, or provide reasoning or evidence showing why the applied construction is correct. *Id.* Moreover, Patent Owner does not agree with the applied construction in its submissions in this proceeding.

Additionally, Dr. Almeroth testifies that the applied construction differs from and is broader than the ordinary meaning of "path parameter information," and is not consistent with the '347 patent Specification, but that he used this construction in his analysis nonetheless. Ex. 1005 ¶¶ 61–63. Specifically, Dr. Almeroth testifies as follows:

> 61. . . . ***[F]or all but two claim terms considered in this Declaration, I have applied the plain and ordinary meaning of those terms*** as . . . would have been interpreted by a [person of ordinary skill in the art] at the time the invention was made . . . .
>
> 62. ***The two exceptions are for the terms: "path parameter information"*** and "predistorting a second signal at the transmitter in a time domain, frequency domain, and a spatial domain." While I understand that the Patent Owner has not formally provided proposed constructions, ***Patent Owner's infringement contentions indicate to me that the Patent Owner has taken a broad interpretation of the claims that is not consistent with the plain and ordinary meaning*** that should be considered when assessing the validity of the Challenged Claims. As such, ***while I do not necessarily agree with these interpretations, I will consider them in rendering my below opinions***.
>
> 63. In Patent Owner's infringement contentions, ***Patent Owner is construing "path parameter information" broader than, and contrary to its plain and ordinary meaning.*** Specifically, it is seeking to construe the term to include any channel state information feedback, regardless of whether that channel state information is explicitly or implicit channel estimation. An implicit estimation is not path parameter information as a [person of ordinary skill in the art] would understand the term in the '347 [p]atent.

Ex. 1005 ¶¶ 61–63 (emphasis added, citations omitted); *see id.* ¶¶ 64–66 (providing further explanation as to why the applied construction is not consistent with the plain and ordinary meaning of the term or the '348 patent Specification). Both Petitioner and Dr. Almeroth also confirm that they used

the construction ascribed to Patent Owner (and both believe to be incorrect) in their analysis. Pet. 35 (explaining that the "path parameter information" limitation is met "under Patent Owner's apparent interpretation of the claims"); Ex. 1005 ¶ 135 (same).

Under these facts, Petitioner has failed to set forth a sufficient basis to support the claim construction it relies on and, consequently has failed to establish a reasonable likelihood that its unpatentability arguments, which are based on that construction, have merit.

Our conclusion in this regard is consistent with the Board's prior decisions in *Hologic*, *Orthopediatrics*, and *Samsung*, upon which Patent Owner relies. *See* Prelim. Resp. 10–14. However, we note that our determination does not rely on discretionary denial or exclusively on Rule 42.104(b)(3), but rather it is based on Petitioner's failure to demonstrate a reasonable likelihood that limitation [1.3] is obvious based on Sesia. Where a petitioner specifically relies on a particular construction of a claim term in order to demonstrate unpatentability, particularly a construction different from the ordinary meaning, that claim construction is part of the unpatentability analysis, and the petitioner must provide a sufficient basis to support that construction. *See, e.g.*, *Corephotonics, Ltd. v. Apple Inc.*, 84 F.4th 990, 1003 (Fed. Cir. 2023) ("In determining whether a claim is invalid as obvious, we compare the prior art to the claim language, and if necessary, after the claim language has been properly construed when the meaning or scope is in dispute."). Here, Petitioner has not done so because:
(1) Petitioner does not rely on the plain and ordinary meaning of the term, and its own expert testifies that its construction is contrary to the plain and ordinary meaning; (2) Petitioner offers no intrinsic or extrinsic evidence that

the construction it relies on is correct; and (3) Petitioner and its expert assert that the proffered construction is inconsistent with the '347 patent Specification.

In reaching our decision here, we distinguish this case from situations where a petitioner relies on the ordinary meaning of a claim term, offers alternative constructions of a claim term, or relies on a construction agreed upon by the parties in the proceeding at issue. None of those situations is present in this case.

Additionally, we find insufficient Petitioner's conclusory statement that Sesia discloses limitation [1.3] "under either Patent Owner's apparent interpretation ***or the plain and ordinary meaning of the term***." Pet. 36 (emphasis added). Neither Petitioner nor Dr. Almeroth explain what they believe the plain and ordinary meaning of "path parameter information" is, what the support would be for any such meaning, or how Sesia teaches or suggests limitation [1.3] under that plain and ordinary meaning. *See id.* at 11–12, 32–36; Ex. 1005 ¶¶ 63–66; *Xerox Corp. v. Bytemark, Inc.*, IPR2022-00624, Paper 12 at 5 (PTAB Feb. 10, 2023) (Director Review) (determining that "the Board was correct in giving little weight to Petitioner's expert because the expert declaration merely offered conclusory assertion without underlying factual support and repeated, *verbatim*, Petitioner's conclusory arguments").

We also find that several of the cases upon which Petitioner relies are inapposite here because they involved situations where alternative constructions were advanced by the petitioner. For example, in *10X Genomics*, the Board explained that:

> [E]ven if our rules and guidance were correctly interpreted as prohibiting a petitioner from relying solely on a claim

> construction it believes is incorrect, that is not what Petitioner has done here. ***Petitioner proposes alternative claim constructions*** and presents at least one ground of unpatentability for each construction.

10X Genomics, Paper 8 at 22 (emphasis added). Similarly, in *Donnelly*, also cited by Petitioner, the petition offered alternative constructions—the construction proposed by the patent owner in district court and the "proper construction" that the petitioner believed was the correct one. *Donnelly*, Paper 2 (Petition) at 29–33 (identifying alternative constructions of "grip portion"). *See also General Electric*, IPR2018-00928, Paper 9 at 12–17 ("Petitioner provides its own interpretation of what the [claim] phrases mean, but also indicates what it believes to be 'Patent Owner's expected interpretation[s]' of those phrases." (second alteration in original)).

Additionally, we are not persuaded by Petitioner's argument based on *Philip Morris* that the rules do "not require a petitioner to express a subjective belief in the correctness of its proffered claim constructions" and that a petitioner can "rely[] on claim constructions that it believes are incorrect." *See* Prelim. Reply 1–2 (emphasis added). The issue here is not Petitioner's "subjective belief" in the correctness of its proffered claim construction, but rather whether Petitioner has demonstrated a reasonable likelihood that the claims at issue are unpatentable, which here would include a sufficient basis to support the claim construction being relied upon. If a petitioner sets forth a sufficient basis to support the construction it relies upon, its subjective belief as to the correctness of that construction is not controlling.

Finally, we note that several of the cases relied on by Petitioner in its Preliminary Reply were decided under the "broadest reasonable interpretation" (BRI) standard previously applied by the Board. *See Apple*,

IPR2018-00821, Paper 9 at 8–11 (explaining that it was permissible for Petitioner to offer different constructions before the Board and in district court due to the different claim construction standards applicable in each forum); *Google*, IPR2018-01085, Paper 10 at 10–11 (same). When the Board and district courts applied different claim construction standards, a petitioner could argue for a construction under BRI that was different from, and broader than, the one it asserted in district court, without undermining its case in either forum. That situation, however, vanished when the claim construction standards applied by the Board and by district courts were harmonized.[5]

For the foregoing reasons, and based on the present record, we determine that Petitioner has not made a sufficient showing that its proffered construction of "path parameter information" is correct. Because Petitioner's obviousness showing is based on this construction, Petitioner has not demonstrated a reasonable likelihood that limitation [1.3] is disclosed by or would have been obvious over Sesia.

b) [1.5] predistorting a second signal at the transmitter in a time domain, a frequency domain, and a spatial domain, according to the channel estimation based on the first signal;

Petitioner's argument concerning limitation [1.5] raises similar issues as its argument concerning the "path parameter information" in limitation

[5] Indeed, in adopting the *Philips* standard for IPR proceedings, the Office noted its agreement with "[s]everal comments" that "acknowledged that harmonizing the claim construction standards would prevent parties from taking inconsistent positions" before the PTAB and in district court. *Changes to the Claim Construction Standard for Interpreting Claims in Trial Proceedings Before the Patent Trial and Appeal Board*, 83 Fed. Reg. 51-340, 51350 (Oct. 11, 2018).

[1.3] above. Specifically, Petitioner argues that "predistorting" should be interpreted to include "beamforming" because "[i]n the co-pending district court litigation, Patent Owner alleges that beamforming 'predistorts' a signal in a time domain, frequency domain, and a spatial domain." Pet. 12 (citing Ex. 1006, 9; Ex. 1009, 9; Ex. 1010, 9; Ex. 1015, 8). Petitioner, however, criticizes this construction by asserting that "[b]eamforming and the selection of time and frequency resources jointly or individually ***are not predistortion***." *Id.* (emphasis added) (citing Ex. 1005 ¶ 68). Petitioner also submits testimony from Dr. Almeroth stating that "I do not necessarily agree that the selection of time and frequency resources and that beamforming are jointly or individually predistortion." Ex. 1005 ¶ 68. And, Dr. Almeroth testifies that he did not apply the plain and ordinary meaning of the "predistorting . . ." claim limitation in his analysis. *Id.* ¶¶ 61–62 (explaining that he applied the plain and ordinary meaning for all claim terms with "two exceptions," one of which is the phrase "predistorting a second signal at the transmitter in a time domain, frequency, domain, and a spatial domain"). As with "path parameter information" above, Petitioner does not offer alternative constructions of the "predistorting . . ." limitation, but instead exclusively relies on the construction ascribed to Patent Owner. Pet. 12–13; Ex. 1005 ¶¶ 67–68.

Petitioner and Dr. Almeroth also confirm that they are applying the construction ascribed to Patent Owner (and with which they both disagree) when applying Sesia to limitation [1.5]. For example, the Petition states that Sesia discloses the "predistorting . . ." language "in light of Patent Owner's apparent interpretation of this limitation based on its infringement contentions in the related District Court proceedings" and "under Patent

Owner's apparent interpretation of the claims which is broad enough to capture beamforming a wireless signal." Pet. 39, 43. Petitioner also argues that Sesia meets the "predistorting . . ." limitation by disclosing "multiple methods of beamforming" including "(i) closed-loop rank-1 precoding and (ii) beamforming with UE-specific reference signals." *Id.* at 39 (citing Ex. 1003, 270; Ex. 1005 ¶ 147). Dr. Almeroth makes similar assertions. Ex. 1005 ¶¶ 146 (applying Sesia to the "predistorting . . ." language "in light of Patent Owner's apparent interpretation of this limitation based on its infringement contentions in the related district court proceedings"), 159 (stating that Sesia meets the "predistorting . . ." limitation "under Patent Owner's apparent interpretation of the claims which is broad enough to capture beamforming a wireless signal").

For similar reasons discussed above with respect to "path parameter information," Petitioner has not offered sufficient support for its claim construction of the "predistorting . . ." limitation applied in the Petition based on the present record. Petitioner expressly criticizes the construction it offers, and indicates that this construction differs from the plain and ordinary meaning of the claim language. Pet. 10, 12. Additionally, Petitioner does not explain why the applied construction is correct or offer evidence in support of the construction, and Patent Owner also does not expressly agree with the construction or provide reasons why it is correct. *Id.* at 15–16; Prelim. Resp. 5–17.

Consequently, we determine that Petitioner has not sufficiently shown that "predistorting a second signal at the transmitter in a time domain, frequency domain, and a spatial domain," as required by the challenged claims, is disclosed by or would have been obvious over Sesia. Because

Petitioner's obviousness showing is based on a construction that lacks sufficient support, Petitioner has not demonstrated a reasonable likelihood that limitation [1.5] is disclosed by or would have been obvious over Sesia.

3. Independent Claims 8, 15, and 19

Independent claims 8, 15, and 19 also include "path parameter information" and "predistorting . . ." limitations similar to those in limitations [1.3] and [1.5] discussed above. *See* Ex. 1001, 17:40–43, 17:46–48, 18:39–41, 18:42–43, 19:12–14, 19:18–19. For the reasons discussed with respect to claim 1, we determine, based on the present record, that Petitioner has not established a reasonable likelihood of unpatentability for claims 8, 15, and 19.

4. Dependent Claims 2–4, 6, 7, 9–12, 14, 16, 17, and 20–23

Claims 2–4, 6, 7, 9–12, 14, 16, 17, and 20–23 depend from one of independent claims 1, 8, 15, and 19. For the reasons discussed above with respect to claims 1, 8, 15, and 19, we determine, based on the present record, that Petitioner has not established a reasonable likelihood of unpatentability for dependent claims 2–4, 6, 7, 9–12, 14, 16, 17, and 20–23.

D. Ground 2: Asserted Obviousness of Claims 1–4, 6–12, 14–17, and 19–23 Based on Forenza

Petitioner contends that claims 1–4, 6–12, 14–17, and 19–23 would have been obvious over Forenza. Pet. 3, 57–70. Patent Owner disagrees. Prelim. Resp. 21–36.

1. Overview of Forenza (Ex. 1014)

Forenza is directed to a system and method for distributed antenna wireless communications including a plurality of wireless client devices and a plurality of distributed antennas. Ex. 1014, code (57). The system

computes channel state information (CSI) for wireless communication channels between a plurality of base distributed antennas and the wireless client devices, and computes precoding weights from the CSI. *Id.* The system precodes data using the precoding weights prior to wireless transmission from the distributed antennas, and wirelessly transmits the precoded data from the antennas to the wireless client devices. *Id.* The '319 patent explains that precoding causes radio frequency interference between the plurality of base stations but simultaneously generates a plurality of non-interfering radio frequency user channels between the distributed antennas and wireless client devices. *Id.*

2. Analysis of Independent Claim 1

In Ground 2, Petitioner relies on the same constructions of "path parameter information" in limitation [1.3] and "predistorting a second signal at the transmitter in a time domain, frequency domain, and a spatial domain" in limitation [1.5] as it did for those limitations in Ground 1, and Petitioner similarly bases its unpatentability showing on those constructions. Pet. 10–13, 60–63, 64–66.

With respect to limitation [1.3], which includes the "path parameter information" claim term, Petitioner makes clear that it is relying on the claim construction ascribed to Patent Owner and discussed previously. Specifically, Petitioner relies on a channel characterization generated by Forenza's client device which "'may include many factors including, for example, phase and amplitude relative to a reference internal to the receiver, an absolute reference, a relative reference, characteristic noise, or other factors,' all of which are examples of obtaining path parameter information (***as construed by Patent Owner***)." Pet. 60 (emphasis added) (citing

Ex. 1014, 26:50–54). Petitioner goes on to explain that Forenza describes such characterizations as channel state information (CSI), which it states "is path parameter information ***as construed by Patent Owner***." *Id.* at 61 (emphasis added) (citing Ex. 1014, 15:4–18; Ex. 1005 ¶ 288). Petitioner also relies on channel estimates by the user device which it asserts "contain path parameter information (***as construed by Patent Owner***) used to cancel 'interference due to I/Q gain and phase imbalance.'" *Id.* (emphasis added) (citing Ex. 1014, 44:3–4, 41:64–42:25; Ex. 1005 ¶ 289). Dr. Almeroth makes similar statements indicating that he is relying on the same construction of "path parameter information" ascribed to Patent Owner in applying Forenza to limitation [1.3]. Ex. 1005 ¶¶ 287–289.

With respect to limitation [1.5], which includes the "predistorting . . ." claim language, Petitioner asserts that Forenza discloses precoding, which is a form of beamforming, and that "the term 'predistorting' includes precoding of signals ***based on Patent Owner's apparent construction of the term***." Pet. 20 (explaining that "methods for performing beamforming" include "closed-loop rank-1 precoding"), 39–40 (same), 64 (asserting that "predistorting" includes "precoding" based on "Patent Owner's apparent construction of the term") (emphasis added). Dr. Almeroth also testifies that Forenza discloses precoding, and that "the term 'predistorting' includes precoding of signals ***based on Patent Owner's apparent construction of the term***." Ex. 1005 ¶¶ 294–295 (emphasis added).

For these reasons, and those discussed above with respect to Ground 1, Petitioner has not provided a sufficient basis to support its constructions of "path parameter information" and "predistorting a second signal at the transmitter in a time domain, frequency domain, and a spatial domain" upon

which it relies. Because Petitioner's obviousness showing for limitations [1.3] and [1.5] is based on these constructions, Petitioner has not demonstrated a reasonable likelihood that these limitations are disclosed by or would have been obvious over Forenza.

3. Independent Claims 8, 15, and 19

Independent claims 8, 15, and 19 also include "path parameter information" and "predistorting . . ." limitations similar to those in limitations [1.3] and [1.5] discussed above. *See* Ex. 1001, 17:40–43, 17:46–48, 18:39–41, 18:42–43, 19:12–14, 19:18–19. For the reasons discussed with respect to claim 1, we determine, based on the present record, that Petitioner has not established a reasonable likelihood of unpatentability for claims 8, 15, and 19.

4. Dependent Claims 2–4, 6, 7, 9–12, 14, 16, 17, and 20–23

Claims 2–4, 6, 7, 9–12, 14, 16, 17, and 20–23 depend from one of independent claims 1, 8, 15, and 19. For the reasons discussed above with respect to claims 1, 8, 15, and 19, we determine, based on the present record, that Petitioner has not established a reasonable likelihood of unpatentability for dependent claims 2–4, 6, 7, 9–12, 14, 16, 17, and 20–23.

E. Discretionary Denial

Patent Owner argues we should exercise our discretion under 35 U.S.C. § 314(a) and *Apple Inc. v. Fintiv, Inc.*, IPR2020-00019, Paper 11 (PTAB Mar. 20, 2020) (precedential) to deny institution of *inter partes* review in view of the parallel district court proceeding. Prelim. Resp. 36–53. Petitioner responds by submitting a stipulation pursuant to *Sotera Wireless, Inc. v. Masimo Corp.*, IPR2020-01019, Paper 12 (PTAB Dec. 1, 2020) (precedential as to § II.A) representing that it will not pursue in the

parallel litigation the same grounds in the Petition or any grounds that could have reasonably been raised by the Board. Paper 12.

Because we determine that Petitioner has not demonstrated a reasonable likelihood of prevailing as to any of the challenged claims, we need not reach Patent Owner's arguments for discretionary denial in this Decision.

III. CONCLUSION

After considering the evidence and arguments presented in the current record, we determine that Petitioner has failed to demonstrate a reasonable likelihood of success in proving that at least one of the challenged claims of the '347 patent is unpatentable. We therefore do not institute trial on any challenged claim raised in the Petition.

IV. ORDER

In consideration of the foregoing, it is hereby:

ORDERED that, pursuant to 35 U.S.C. § 314(a), no *inter partes* review of any of challenged claims 1–4, 6–12, 14–17, and 19–23 of the '347 patent is instituted with respect to any grounds set forth in the Petition.

For PETITIONER:

James Glass
Quincy Lu
QUINN EMANUEL URQUHART & SULLIVAN, LLP
jimglass@quinnemanuel.com
quincylu@quinnemanuel.com

For PATENT OWNER:

Reza Mirzaie
Amy Hayden
Neil Rubin
Qi Tong
RUSS, AUGUST & KABAT
rmirzaie@raklaw.com
ahayden@raklaw.com
nrubin@raklaw.com
ptong@raklaw.com

Kenneth WeatherWax
Parham Hendifar
LOWENSTEIN & WEATHERWAX LLP
weatherwax@lowensteinweatherwax.com,
hendifar@lowensteinweatherwax.com

Trials@uspto.gov
571-272-7822

Paper 18
Entered: June 5, 2024

UNITED STATES PATENT AND TRADEMARK OFFICE

BEFORE THE PATENT TRIAL AND APPEAL BOARD

T-MOBILE USA, INC., AT&T SERVICES INC.,
AT&T MOBILITY LLC, AT&T CORPORATION,
CELLCO PARTNERSHIP D/B/A VERIZON WIRELESS,
NOKIA OF AMERICA CORPORATION, AND ERICSSON INC.,
Petitioner,

v.

COBBLESTONE WIRELESS LLC,
Patent Owner.

IPR2024-00136
Patent 8,891,347 B2

Before NATHAN A. ENGELS, NORMAN H. BEAMER, and
RUSSELL E. CASS, *Administrative Patent Judges.*

CASS, *Administrative Patent Judge.*

DECISION
Denying Institution of *Inter Partes* Review
35 U.S.C. § 314

I. INTRODUCTION

A. Background

T-Mobile USA, Inc., AT&T Services, Inc., AT&T Mobility LLC, AT&T Corporation, Cellco Partnership d/b/a Verizon Wireless, Nokia of America Corporation, and Ericsson Inc. (collectively, "Petitioner") filed a Petition requesting an *inter partes* review of claims 1–4, 6–12, 14–17, and 19–23 of U.S. Patent No. 8,891,347 B2 (Ex. 1001, "the '347 patent"). Paper 1, 1 ("Pet."). Cobblestone Wireless LLC ("Patent Owner") filed a Preliminary Response. Paper 12 ("Prelim. Resp.").

An *inter partes* review may not be instituted unless it is determined that "the information presented in the petition filed under section 311 and any response filed under section 313 shows that there is a reasonable likelihood that the petitioner would prevail with respect to at least 1 of the claims challenged in the petition." 35 U.S.C. § 314 (2018); *see also* 37 C.F.R § 42.4(a) (2021) ("The Board institutes the trial on behalf of the Director."). The reasonable likelihood standard is "a higher standard than mere notice pleading," but "lower than the 'preponderance' standard to prevail in a final written decision." *Hulu, LLC v. Sound View Innovations, LLC*, IPR2018-01039, Paper 29 at 13 (PTAB Dec. 20, 2019) (precedential).

For the reasons provided below and based on the record before us, we determine that it is appropriate for us to exercise our discretion under 35 U.S.C. § 314(a) to deny institution in this proceeding. Accordingly, we do not institute an *inter partes* review based on the Petition.

B. Real Parties in Interest

Petitioner identifies T-Mobile USA, Inc., AT&T Services, Inc., AT&T Corporation, AT&T Mobility LLC, Cellco Partnership d/b/a Verizon Wireless, Nokia of America Corporation, and Ericsson Inc. Pet. 2. Petitioner also identifies Samsung Electronics Co., Ltd., because it is named as a defendant and its products are accused of infringement in a related district court litigation. *Id.* at 2–3. Patent Owner names itself as the real party in interest. Paper 7, 2.

C. Related Proceedings

Both parties identify, as matters involving or related to the '347 patent, the following district court proceedings: *Cobblestone Wireless, LLC v. T-Mobile USA, Inc.*, No. 2:22-cv-00477 (E.D. Tex.) (identified as the "LEAD CASE" (Ex. 1012) and referred to herein as the "parallel district court case"); *Cobblestone Wireless, LLC v. Cellco Partnership d/b/a Verizon Wireless*, No. 2:22-cv-00478 (E.D. Tex.); *Cobblestone Wireless, LLC v. AT&T Inc.*, No. 2:22-cv-00474 (E.D. Tex.); and *Cobblestone Wireless, LLC v. Samsung Electronics Co.*, No. 2:23-cv-00285 (E.D. Tex.). Pet. 3; Paper 7, 2. Also, Samsung Electronics America, Inc. filed a petition on December 18, 2023, challenging the '347 patent in IPR2024-00319.

D. The '347 Patent (Ex. 1001)

The '347 patent relates to a method for wireless communication in a system including a transmitter, a receiver, and multiple propagation paths formed between the transmitter and the receiver that are capable of carrying a signal transmitted by the transmitter to the receiver. Ex. 1001, code (57). The method performs a channel estimation of a first signal from the transmitter on one propagation path to obtain parameter information on the

propagation path, predistorting a second signal at the transmitter according to the channel estimation, and transmitting the predistorted signal from the transmitter to the receiver via the propagation path. *Id.*

A schematic representation of a wireless communication system capable of performing the claimed method is shown in Figure 1, reproduced below.

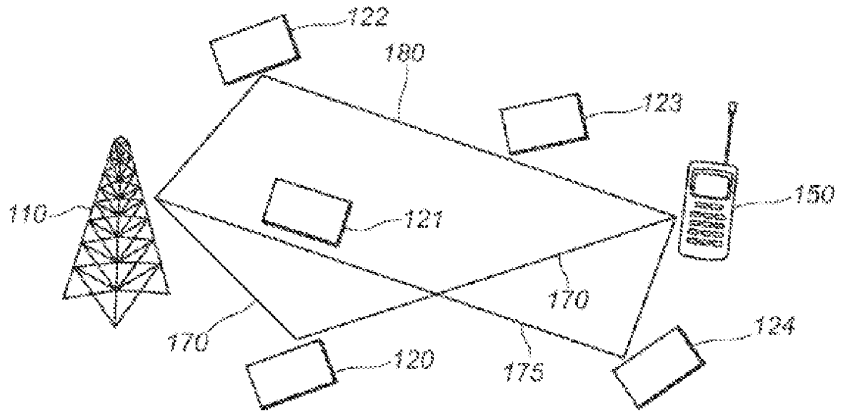

FIG. 1

Figure 1 is a schematic representation of a wireless communication system capable of performing the claimed method. Ex. 1001, Fig. 1, 2:45–47.

As the '347 patent explains, Figure 1 "illustrates a single-link communication scenario between a base station which is configured so as to act as a transmitter 110 and a mobile station which is configured so as to act as a receiver 150." Ex. 1001, 3:23–26. Between transmitter 110 and receiver 150 "are a number of buildings 120–124, which act as scatterers and bouncing points of communication signals traveling between the transmitter 110 and the receiver 150 via propagation paths 170, 175, and 180." *Id.* at 3:26–30. These propagation paths "are different in delay, direction of arrival, direction of departure and Doppler frequency," and the signals traveling along these paths "experience different distortions" so that the

same signal traveling along these paths "may arrive at the receiver with different phases." *Id.* at 3:47–50, 7:44–46. As a result, "[t]he resulting multiple replica of the originally transmitted signals are added at the receiver 150, either destructively or constructively." *Id.* at 7:47–49.

The '347 patent explains that "[t]ypically, equalization techniques known in the art are used in the receivers 150 to recover the original transmitted signal by removing the distortions." Ex. 1001, 7:50–52. "[U]nlike the equalization technique which corrects the distortion at the receiver 150 after receiving the technique," the system of the '347 patent "adds a pseudo 'distortion' before the signals are transmitted at the transmitter 110." *Id.* at 7:63–67. "These 'pre-distorted' signals," the '347 patent explains, "are then transmitted in such a way that the signal distortion can be successfully removed while propagating." *Id.* at 7:67–8:3.

The '347 Patent's pre-distortion process is shown in more detail in Figure 4, reproduced below.

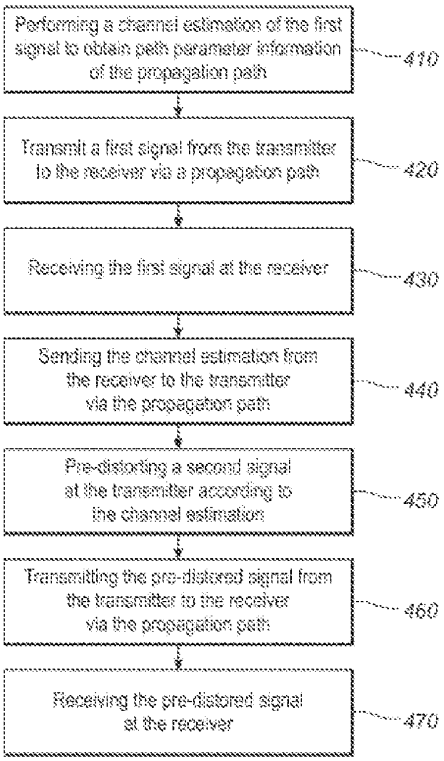

FIG. 4

As shown in Figure 4, the system first performs a channel estimation of the first signal to obtain path parameter information of the propagation path (step 410). Ex. 1001, Fig. 4, 8:3–7. Next, the transmitter transmits a first signal to the receiver via a propagation path (step 420). *Id.* at Fig. 4, 8:7–9. The receiver receives the first signal and performs a channel estimation algorithm to obtain estimates of the delay, Doppler frequency, direction of arrival, direction of departure, and complex amplitude for each of the propagation paths (step 430). *Id.* at Fig. 4, 8:11–16. The receiver then sends the channel estimation to the transmitter via the propagation path. *Id.* at Fig. 4, 9:1–3. Then, for the next frame or block to transmit, the transmitter "pre-distorts" a second signal and generates multiple signal replica with

appropriate settings of the transmitting time, transmitting pace and directions, receiving directions, and complex weight of the signal (step 450). *Id.* at Fig. 4, 9:6–10. The transmitter sums up and transmits these "pre-distorted" signal replica (step 460), which are received by the receiver (step 470). *Id.* at Fig. 4, 9:12–14.

E. Claim 1

Of challenged claims 1–4, 6–12, 14–17, and 19–23, claims 1, 8, 15, and 19 are independent. Challenged claim 1 is illustrative, and is reproduced below.

> [1.0] A method for wireless communication in a system including a transmitter, a receiver, and a plurality of propagation paths formed between the transmitter and the receiver which are capable of carrying a signal transmitted by the transmitter to the receiver, the method comprising:
>
> [1.1] transmitting a first signal from the transmitter to the receiver via a first propagation path of the plurality of propagation paths;
>
> [1.2] receiving the first signal at the receiver;
>
> [1.3] performing channel estimation based on the first signal to obtain path parameter information of the first propagation path;
>
> [1.4] sending the channel estimation that includes the path parameter information from the receiver to the transmitter via the first propagation path;
>
> [1.5] predistorting a second signal at the transmitter in a time domain, a frequency domain, and a spatial domain, according to the channel estimation based on the first signal;
>
> [1.6] transmitting the predistorted second signal from the transmitter to the receiver via the first propagation path; and
>
> [1.7] receiving the predistorted second signal at the receiver.

Ex. 1001, 16:40–61 (indents and bracketed paragraph identifiers added).

F. Applied Reference

Petitioner relies upon the following reference:

> Stefania Sesia, "LTE: The UMTS Long Term Evolution from Theory to Practice," Second Edition, published by Wiley (Ex. 1003, "Sesia").

Pet. v, 6. Petitioner submits declarations from James A. Proctor (Ex. 1005) and Sylvia Hall-Ellis (Ex. 1004).

1. Overview of Sesia (Ex. 1003)

Sesia is a book entitled "LTE – The UMTS Long Term Evolution From Theory to Practice," authored by Stefani Sesia, Issam Toufik, and Matthew Baker, and published by Wiley with a copyright date of 2011. Ex. 1003, 1, 5.[1] Sesia explains that it "provides a through, authoritative and complete tutorial of the LTE system, now fully updated and extended to include LTE-Advanced," and "gives a detailed explanation of the advances made in our theoretical understanding and the practical techniques that will ensure the success of this ground-breaking new radio access technology." *Id.* at 29. One aim of Sesia is "to chart an explanatory course through the LTE specifications, to support those who design LTE equipment." *Id.* at 32.

Sesia discloses the use of a base station (also referred to as an eNodeB) in communication with one or more mobile devices or user equipment (UE). Ex. 1003, 480. Sesia illustrates in Figure 20.1, reproduced below, a base station with an omnidirectional antenna that transmits a signal along three different propagation paths, shown as Path 1, Path 2, and Path 3.

[1] The cited pages of Sesia refer to the page numbers added by Petitioner, not the original pages in the book.

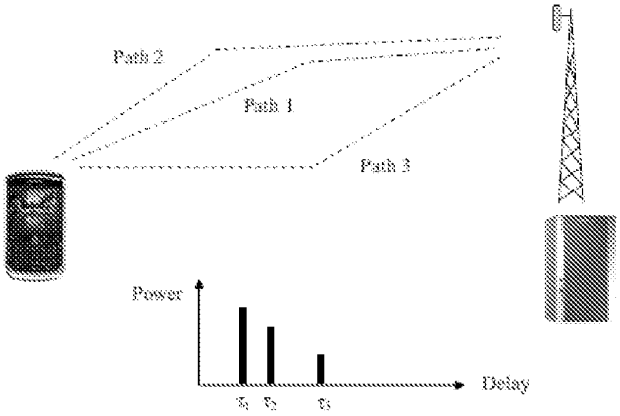

Figure 20.1: Multipath propagation and PDP.

Sesia's Figure 20.1 shows a base station (right) with an antenna that transmits a signal along three propagation paths, Path 1, Path 2, and Path 3. Ex. 1003, 480–481.

Sesia explains that, as shown in Figure 20.1, "[t]he transmitted signal traverses three paths with different delays." *Id.* at 480.

Sesia also explains that LTE "is a coherent communication system," meaning that its detection method "exploits channel knowledge." Ex. 1003, 207–208. "Coherent detection," Sesia states, "can make use of both amplitude and phase information carried by the complex signals, and not of only amplitude information as with non-coherent detection." *Id.* at 207. "Optimal reception by coherent detection," according to Sesia, "typically requires accurate estimation of the propagation channel." *Id.* "A common and simple way to estimate the channel is to exploit known signals which do not carry any data" and, "[i]n order to estimate the channel as accurately as possible, all correlations between channel coefficients in time, frequency and space should be taken into account." *Id.* at 208. LTE can use reference signals embedded into a transmitted signal to perform these estimations. *Id.* at 208–209.

Sesia also includes sections describing "frequency-domain channel estimation," "time-domain channel estimation," and "spatial-domain channel estimation." Ex. 1003, 220–227. Sesia discloses that a user equipment (UE) can report these channel estimations to an eNodeB using implicit feedback, which "provides an implicit representation of the channel consisting of an indication of the data rate that could be achieved if the eNodeB used a certain precoder." *Id.* at 316, 704. This can be compared to "explicit feedback," which is "not supported in LTE or LTE-Advanced," in which "a UE would instead explicitly report a quantized representation of the physical CSI [(Channel State Information)] without making assumptions about the nature of the eNodeB precorder." *Id.* at 705. Sesia further discloses that LTE supports beamforming techniques. *Id.* at 295–298.

G. Asserted Ground of Unpatentability

Petitioner challenges the patentability of claims 1–4, 6–12, 14–17, and 19–23 of the '347 patent on the following ground:

Claim(s) Challenged	35 U.S.C. §	Reference(s)/Basis
1–4, 6–12, 14–17, 19–23	103(a)[2]	Sesia

Pet. 6.

[2] The Leahy-Smith America Invents Act, Pub. L. No. 112-29, 125 Stat. 284 (2011) ("AIA"), included revisions to 35 U.S.C. § 103 that became effective after the filing of the application for the '136 patent. For purposes of this Decision, we apply the pre-AIA version of 35 U.S.C. § 103.

II. DISCUSSION

Patent Owner asserts that institution should be denied under 35 U.S.C. § 314(a), in deference to the parallel district court case. Prelim. Resp. 25. We address the parties' arguments regarding discretionary denial below.

Under 35 U.S.C. § 314(a), the Director has discretion to deny institution of review. *See SAS Inst. Inc. v. Iancu*, 138 S. Ct. 1348, 1356 (2018) ("[Section] 314(a) invests the Director with discretion on the question whether to institute review." (emphasis omitted)); *Cuozzo Speed Techs., LLC v. Lee*, 136 S. Ct. 2131, 2140 (2016) ("[T]he agency's decision to deny a petition is a matter committed to the Patent Office's discretion."); *Harmonic Inc. v. Avid Tech., Inc.*, 815 F.3d 1356, 1367 (Fed. Cir. 2016) ("[T]he PTO is permitted, but never compelled, to institute an IPR proceeding.").

One instance when the Board considers exercising this discretion is when there is an early trial date in related litigation, which the Board considers as part of assessing all relevant circumstances, including the merits, to balance considerations such as system efficiency, fairness, and patent quality. *See Apple Inc. v. Fintiv, Inc.*, IPR2020-00019, Paper 11 (PTAB Mar. 20, 2020) (precedential) ("*Fintiv* Order"); *NHK Spring Co. v. Intri-Plex Technologies, Inc.*, IPR2018-00752, Paper 8 at 19–20 (PTAB Sept. 12, 2018) (precedential). The Board evaluates the following six factors when making this assessment:

> 1. whether the court granted a stay or evidence exists that one may be granted if a proceeding is instituted;
>
> 2. proximity of the court's trial date to the Board's projected statutory deadline for a final written decision;
>
> 3. investment in the parallel proceeding by the court and the parties;

> 4. overlap between issues raised in the petition and in the parallel proceeding;
>
> 5. whether the petitioner and the defendant in the parallel proceeding are the same party; and
>
> 6. other circumstances that impact the Board's exercise of discretion, including the merits.

Fintiv Order at 5–6. In evaluating these factors, we take a holistic view of whether efficiency and integrity of the system are best served by denying or instituting review. *Fintiv* Order at 6.

On June 21, 2022, the Director issued an Interim Procedure for Discretionary Denials in AIA Post-Grant Proceedings With Parallel District Court Litigation (the "Interim *Fintiv* Guidance").[3] The Interim *Fintiv* Guidance provides "several clarifications" to "the PTAB's current application of *Fintiv* to discretionary denial where there is parallel litigation" based on comments received from stakeholders in response to a Request for Comments (RFC). Interim *Fintiv* Guidance at 2.

In the analysis that follows, we first consider whether *Fintiv* factors 1–5 weigh in favor of exercising our discretion to deny institution. For the reasons discussed below, we conclude that *Fintiv* factors 1–5 weigh in favor of denying institution.

Because *Fintiv* factors 1–5 favor denial of institution, we must also determine whether the Petition presents compelling merits. *See CommScope Techs. LLC v. Dali Wireless, Inc.*, IPR2022-01242, Paper 23 at 5 (PTAB Feb. 27, 2023) (precedential) ("In circumstances where . . . the Board's analysis of *Fintiv* factors 1–5 favors denial of institution, the Board shall

---

[3] The Interim *Fintiv* Guidance is available at https://www.uspto.gov/sites/default/files/documents/interim_proc_discretionary_denials_aia__parallel_district_court_litigation_memo_20220621_.pdf.

then assess compelling merits."). "Compelling, meritorious challenges are those in which the evidence, if unrebutted in trial, would plainly lead to a conclusion that one or more claims are unpatentable by a preponderance of the evidence." Interim *Fintiv* Guidance at 4. "A challenge can only 'plainly lead to a conclusion that one or more claims are unpatentable' (*id.*) if it is highly likely that the petitioner would prevail with respect to at least one challenged claim." *OpenSky Indus., LLC v. VLSI Tech. LLC*, IPR2021-01064, Paper 102 at 49–50 (PTAB Oct. 4, 2022) (precedential) ("*OpenSky*"). "[A] determination of 'compelling' merits should not be taken as a signal to the ultimate conclusion after trial." *Id.* As discussed below, we find that Petitioner has not made a sufficient showing of compelling merits based on the record presented. Thus, we find that it is appropriate to exercise our discretion to deny institution based on the status of the parallel district court case.

1. Factor 1: whether a stay exists or is likely to be granted if a proceeding is instituted

Under the first *Fintiv* factor, we consider "whether the court granted a stay or evidence exists that one may be granted if a proceeding is instituted." *Fintiv* Order at 6. Patent Owner contends that this factor weighs in favor of denial because "no stay of the parallel district court litigation has been granted, and a stay is unlikely given the advanced stage of the case." Prelim. Resp. 26. Petitioner argues that neither party has requested a stay in the district court proceeding, and this factor should be considered neutral. Pet. 67.

We will not attempt to predict how the district court in the parallel district court case would proceed if a stay is requested because the court may determine whether or not to stay any individual case, including the related

one, based on a variety of circumstances and facts beyond our control and to which the Board is not privy. *Sand Revolution II, LLC v. Cont'l Intermodal Grp. - Trucking LLC*, IPR2019-01393, Paper 24 at 7 (PTAB June 16, 2020) (informative) ("*Sand Revolution*"). Accordingly, we find that factor 1 is neutral.

2. *Factor 2: proximity of the court's trial date to the Board's projected statutory deadline*

Under the second *Fintiv* factor, we consider the "proximity of the court's trial date to the Board's projected statutory deadline for a final written decision." *Fintiv* Order at 6. Petitioner states that the parallel district court case "is not set to begin until at least September 23, 2024." Pet. 61 (citing Ex. 1011, 1). Petitioner argues that it moved to consolidate the parallel district court case (which it refers to as the "Carrier 1.0 cases") with a later district court case (which it refers to as the "Carrier 2.0 cases"), and that trial in the later district court case is set to occur in May 2025. Prelim. Reply 2–3, 4–5. According to Petitioner, Patent Owner's analysis fails to consider this potential consolidation. *Id.* at 1–2. Petitioner also contends that it was "granted a limited intervention in the Samsung Case to oppose Patent Owner's attempted modification of the Protective Order in that case" and, "[i]n that opposition, Petitioners pointed out the faults in Patent Owner's attempts to prevent consolidation." *Id.* at 5.

Patent Owner states that "the district court trial is set to occur ***over eight months*** before the deadline for a final written decision," which Patent Owner argues "***weighs heavily in favor of discretionary denial***." Prelim. Resp. 30 (emphasis in original). Patent Owner also argues that the "timeframe set by the district court is consistent with the Federal Court Management Statistics for the Eastern District of Texas." *Id.* at 29.

Specifically, Patent Owner asserts that these statistics "indicate that, over the past six years, a civil case in the district was brought to trial 19.6 months after filing," and that the trial statistics "indicate median times to trial for civil cases for the twelve-month period ending in December for 2018–2023 as 19.0, 17.8, 17.5, 23.0, 19.0, and 21.4." *Id.* at 29–30 (citing Ex. 2003 (Trial Statistics)). In the parallel district court case, according to Patent Owner, "trial is set approximately 21 months after the cases were filed." *Id.* at 30 (citing Ex. 1011 (Docket Control Order), 1; Exs. 2004–2006 (parallel cases filed December 15–16, 2022)).

Patent Owner further argues that Petitioner's consolidation motion "is unlikely to be granted" because "there are no overlapping patents, patent families, inventors, or claim construction issues," and consolidation would result in an eight-month trial delay. Prelim. Sur-reply 1–2, 4. According to Patent Owner, "the presiding judge in the district court cases, Judge Gilstrap *sua sponte* divided and consolidated the cases pending between Petitioners and Patent Owner into two groups: the first group involving the '347 and other families (Carrier 1.0), and the second group involving an entirely different family (Carrier 2.0)," which "further suggests Judge Gilstrap is unlikely to consolidate Carrier 1.0 and 2.0 cases now." *Id.* at 5.

We will not attempt to predict how the district court in the parallel district court case will decide the pending consolidation motion. *Cf. Sand Revolution*, IPR2019-01393, Paper 24 at 7. Here, as Patent Owner points out, the deadline for our final written decision is approximately eight months after the current trial date in the parallel district court case. Additionally, the average time to trial for the Eastern District of Texas for the 12-month period ending December 31, 2023, is listed as 21.4 months, which is very

similar to the 21-month period from filing to the trial date set by the district court. *See* Ex. 2003. Thus, the estimated trial date based on the average time to trial statistics is very close to the trial date set by the judge in the parallel district court case. In light of these facts, we find that factor 2 weighs in favor of exercising discretion to deny institution.

3. Factor 3: investment in the parallel proceeding by the court and parties

Under the third *Fintiv* factor, we consider the "investment in the parallel proceeding by the court and the parties." *Fintiv* Order at 6. Petitioner argues that factor 3 "weighs heavily against discretionary denial" because the parallel district court case "is still in the very early stages of litigation." Pet. 67. More specifically, Petitioner asserts that "discovery is still in the preliminary stages," invalidity contentions were filed in May 2023, "Claim Construction is not scheduled until April 30, 2024," and "a claim construction order will not issue prior to the PTAB's projected institution date." *Id.* Petitioner further contends that it "diligently prepared this Petition and filed well in advance of the statutory deadline, which weighs against denying institution." *Id.*

Patent Owner argues "the parties and the district court will have invested significant time and resources in the district court litigation by the time the Board reaches an institution decision in this matter." Prelim. Resp. 35. Patent Owner argues "an order resulting from the May 2, 2024 *Markman* hearing (Ex. 2001) will likely issue prior to the June 11, 2024 deadline for the institution decision" and fact discovery and the exchange of opening and rebuttal expert reports also will be completed prior to June 11, 2024. *Id.* at 33–34. Regarding diligence, Patent Owner argues Petitioner

"unduly delayed in filing their Petition, filing just over two weeks before the statutory deadline." *Id.* at 36.

Because the *Markman* hearing will be completed prior to the time of the institution decision and discovery will have proceeded to an advanced stage (including the close of fact discovery and exchange of opening and rebuttal expert reports) by the time of this Decision, we find that factor 3 weighs in favor of exercising discretion to deny institution.

4. Factor 4: overlap between issues raised in the petition and in the parallel proceeding

Under the fourth *Fintiv* factor, we consider the "overlap between issues raised in the petition and in the parallel proceeding." *Fintiv* Order at 6. The Petition states that "if instituted, Petitioner stipulates that it will not pursue invalidity against the asserted claims in the district court using the specific combination of prior art references set forth in the grounds presented in this Petition for purposes of establishing obviousness (e.g., Sesia et al. under § 103)." Pet. 68. Patent Owner argues that the fourth *Fintiv* factor favors institution despite Petitioner's stipulation. Prelim. Resp. 37–40. In particular, Patent Owner asserts that Petitioner's "limited" stipulation "does not alleviate inefficiency concerns." Prelim. Resp. 38–39.

Petitioner's stipulation that it will not rely on the grounds asserted in the Petition in the parallel district court proceeding mitigates to at least some degree concerns of duplicative efforts and potentially conflicting decisions. *See Sand Revolution*, Paper 24 at 12. Thus, we find that factor 4 weighs marginally against exercising discretion to deny institution.

5. Factor 5: whether the petitioner and the defendant in the parallel proceeding are the same party

Under the fifth *Fintiv* factor, we consider "whether the petitioner and the defendant in the parallel proceeding are the same party." *Fintiv* Order at 6. Petitioner acknowledges "overlapping parties" and argues factor 5 is neutral. Pet. 68. Patent Owner argues "Petitioners are the defendants and intervenors in the parallel litigation" and, therefore, factor 5 weighs in favor of exercising discretion to deny institution. Prelim. Resp. 41.

In light of the fact that the trial date in the parallel district court case significantly precedes the Board's anticipated deadline for a Final Written Decision, we find that factor 5 weighs in favor of exercising discretion to deny institution. *See Huawei Techs. Co., Ltd. v. WSOU Invs., LLC*, IPR2021-00225, Paper 11 at 13–14 (PTAB June 14, 2021) (factor 5 "favors denial if trial precedes the Board's Final Written Decision and favors institution if the opposite is true").

6. Factor 6: other circumstances that impact the Board's exercise of discretion, including the merits

The merits of the petition's challenges are part of the "balanced assessment of all the relevant circumstances" the Board undertakes in the *Fintiv* discretionary denial analysis. *Fintiv* Order, at 14–16. The Interim *Fintiv* Guidance also provides that "compelling, meritorious challenges will be allowed to proceed at the PTAB even where district court litigation is proceeding in parallel." Interim *Fintiv* Guidance at 4. The Guidance defines "[c]ompelling, meritorious challenges" as "those in which the evidence, if unrebutted at trial, would plainly lead to a conclusion that one or more claims are unpatentable by a preponderance of the evidence." *Id.*; *see CommScope*, IPR2022-01242, Paper 23 at 3. In *CommScope*, the USPTO

Director further explained that "[a] challenge can only 'plainly lead to a conclusion that one or more claims are unpatentable' if it is highly likely that the petitioner would prevail with respect to at least one challenged claim." *CommScope* at 3–4 (quoting *OpenSky*, IPR2021-01064, Paper 102 at 49).

According to *CommScope*, we should only reach the compelling merits analysis if we first determine that the first five *Fintiv* factors favor discretionary denial. *CommScope* at 4.

> Thus, in circumstances where the Board determines that the other *Fintiv* factors 1–5 do not favor discretionary denial, the Board shall decline to discretionarily deny under *Fintiv* without reaching the compelling merits analysis. In circumstances where, however, the Board's analysis of *Fintiv* factors 1–5 favors denial of institution, the Board shall then assess compelling merits.

Id. at 4–5. In this case, *Fintiv* factors 1–5 favor denial. Specifically, weighing factors 1–5 in this case, we find that the approximately 8-month delay between the estimated trial date and the deadline for a final written decision in this IPR (factor 2), the progress of and investment made by the parties and the Court in the parallel district court case (factor 3), and the fact that Petitioner is also a party in the District Court Litigation (factor 5) outweigh Petitioner's stipulation mitigating the concerns about overlap between the two proceedings (factor 4). Additionally, we find that factor 1 is neutral. Thus, we address whether the merits of Petitioner's case are compelling.

Based on the present record, we do not find that Petitioner has presented a "compelling, meritorious challenge" as to any of the challenged claims. Among other things, Petitioner bases its arguments on the construction of two claim terms: (1) "path parameter information" and (2) "predistorting a second signal at the transmitter in a time domain,

frequency domain, and a spatial domain," which appear in claim 1 and in the same or similar form in independent claims 8, 15, and 19. Pet. 14–16. Petitioner submits constructions that it represents are "Patent Owner's apparent interpretation of" these terms, although it acknowledges that "Patent Owner has not formally provided proposed claim constructions." *Id.* at 13–14. These terms are discussed further below.

a) "path parameter information"

Petitioner argues that "[i]n the co-pending district court litigation, Patent Owner interprets 'path parameter information' broadly to capture any channel state information feedback, regardless of whether that channel state information is an explicit or implicit channel estimation." Pet. 14. However, although Petitioner relies on this construction, Petitioner also criticizes the construction, asserting that "the ['347] patent ***expressly excludes*** implicit estimation from path parameter information" and that Patent Owner's purported construction "is ***not consistent*** with the plain and ordinary meaning" of the claim language. *Id.* (emphasis added). In discussing claim construction, Petitioner does not offer alternative constructions, but instead exclusively relies on the construction it ascribes to Patent Owner and criticizes. *Id.* at 14–15.

In the section of the Petition applying the prior art to the claims, Petitioner makes clear that it is relying on Patent Owner's purported construction of "path parameter information." Pet. 34–36. Specifically, when comparing limitation [1.3] to Sesia, Petitioner asserts that:

> Based on Sesia's disclosure, a [person of ordinary skill in the art would understand, ***under Patent Owner's apparent interpretation of the claims***, that the information that is obtained from performing channel estimation on a reference signal and subsequently provided to the eNodeB by the UE as

> either implicit or explicit feedback corresponds with the claimed "path parameter information." Furthermore, ***under Patent Owner's apparent interpretation of the claims***, based on Sesia's disclosure, a [person of ordinary skill in the art] would understand that this information is 'path parameter information of the first propagation path" given that channel estimation attempts to define the channel model of a propagation path.

Pet. 35 (emphasis added) (citing Ex. 1005 ¶ 135). At the end of the discussion of this claim element, Petitioner states that Sesia discloses or teaches the claim language "under either Patent Owner's apparent interpretation ***or the plain and ordinary meaning of the term***," but Petitioner never explains what the plain and ordinary meaning of the term is, or how that plain and ordinary meaning is disclosed by Sesia. *Id.* at 36 (emphasis added); *see id.* at 14–15 (discussing only Patent Owner's purported construction in the claim construction section).

To support its reliance on Patent Owner's purported construction of "path parameter information," Petitioner cites several cases for the proposition that a petition may rely on a claim construction from Patent Owner that the petitioner believes is incorrect. Pet. 13. For example, Petitioner cites *10x Genomics, Inc. v. Bio-Rad Labs., Inc.*, IPR2020-00086, Paper 8 at 17–22 (PTAB Apr. 27, 2020) for the proposition that 37 C.F.R. § 42.104(b) "does not prohibit Petitioner from submitting a claim construction it believes is incorrect and relying on that construction to show how the claim is unpatentable" or relying on "a claim construction relied on by Patent Owner to assert infringement in the related district court action." Pet. 13. Petitioner also relies on *Donnelly Distribution LLC v. Russo Trading Co., Inc.*, IPR2019-00761, Paper 8 at 17–18 (PTAB Sept. 6, 2019). *Id.*

Patent Owner responds that the Petition "rests on an infirm foundation" because Petitioner "raise[s] a single invalidity ground (over Sesia) that solely and exclusively relies upon Patent Owner's alleged claim construction positions" and "make[s] clear ***in the Petition, that they believe the sole constructions they rely on are dead wrong***." Prelim. Resp. 5 (emphasis in original). Patent Owner argues that "the Board's caselaw, and the Office's policy make clear" that "a petitioner cannot demonstrate a reasonable likelihood of prevailing based on constructions it expressly disagrees with in its petition." *Id.* Patent Owner further argues that, "at least as to limitation 1.3, Petitioner[] rel[ies] on a claim interpretation that ***no one*** agrees with" and that "Patent Owner's actual claim constructions are different from the strawman construction that Petitioner[] ha[s] relied upon." *Id.* Patent Owner distinguishes the Petition from situations where a petitioner "explain[s] why a claim is invalid under alternative claim constructions, *e.g.*, its proposed construction and a construction proffered by the patent owner." *Id.*

Patent Owner also cites Board decisions for the proposition that "a petitioner cannot satisfy its burden of proof under constructions it insists are wrong." Prelim. Resp. 10. For example, Patent Owner cites *Hologic, Inc. v. Enzo Life Sciences, Inc.*, IPR2018-00019, Paper 21 (PTAB Nov. 28, 2018) for the proposition that a petitioner "does not satisfy Rule 42.104(b)(3) when, in a proceeding applying the *Philips* claim-construction standard, it 'expressly disagree[s] with its proffered constructions.'" *Id.* at 10–11 (citing *Hologic* at 2, 5–7). Patent Owner also cites additional cases in support of this proposition. *Id.* at 13 (citing *Orthopediatrics Corp. v. K2M, Inc.*, IPR2018-01548, Paper 9 at 9 (PTAB Mar. 1, 2019) (denying institution

where "Petitioner's contentions are limited to how the claims at issue should not be construed")), 13–14 (citing *Samsung Elecs. of Am., Inc. v. Uniloc 2017 LLC*, IPR2020-00046, Paper 6 at 10 (PTAB Apr. 1, 2020) ("We exercise our discretion and decline Petitioner's invitation to adopt allegedly incorrect claim constructions and institute an *inter partes* review on the basis of those constructions.")).

Based on the present record, Petitioner has not presented a compelling, meritorious case that the challenged claims are unpatentable. Petitioner bases its case upon a claim construction that it ascribes to Patent Owner, and then expressly criticizes as being inconsistent with the plain and ordinary meaning of the claim language and the '347 patent Specification. Pet. 14–15. Additionally, Petitioner does not provide reasoning or evidence showing why the applied construction is correct, and Patent Owner does not agree with the construction in the Preliminary Response. *Id.* Under these facts, Petitioner has failed to set forth a sufficient basis for us to find a compelling case of unpatentability.

Our conclusion in this regard is consistent with the Board's prior decisions in *Hologic*, *Orthopediatrics*, and *Samsung*, upon which Patent Owner relies. *See* Prelim. Resp. 10–14. Moreover, we find that the contrary cases upon which Petitioner relies are inapposite here because they involved alternative constructions advanced by the petitioner. For example, in *10X Genomics*, the Board explained that:

> [E]ven if our rules and guidance were correctly interpreted as prohibiting a petitioner from relying solely on a claim construction it believes is incorrect, that is not what Petitioner has done here. ***Petitioner proposes alternative claim constructions*** and presents at least one ground of unpatentability for each construction.

10X Genomics, Paper 8 at 22 (emphasis added). Similarly, in *Donnelly*, also cited by Petitioner, the petition offered alternative constructions—the construction proposed by the patent owner in district court and the "proper construction" that the petitioner believed was the correct one. *Donnelly*, Paper 2 (Petition) at 29–33 (identifying alternative constructions of "grip portion").

For the foregoing reasons, we determine that Petitioner has not made a compelling, meritorious showing that "path parameter information," as required by the challenged claims, is disclosed by or would have been obvious over Sesia. As a result, factor 6 does not weigh in favor of institution.

b) "predistorting a second signal at the transmitter in a time domain, frequency domain, and a spatial domain"

Petitioner's argument concerning this limitation raises similar issues as its argument concerning "path parameter information" above. Specifically, Petitioner argues that "predistorting" should be interpreted to include "beamforming" because "[i]n the co-pending district court litigation, Patent Owner alleges that beamforming 'predistorts' a signal in a time domain, frequency domain, and a spatial domain." Pet. 15 (citing Ex. 1006, 9; Ex. 1009, 9; Ex. 1010, 9). Petitioner, however, criticizes this construction by asserting that "[b]eamforming and the selection of time and frequency resources jointly or individually are not predistortion," and that Patent Owner's purported construction "is not consistent with the plain and ordinary meaning" of the claim language. *Id.* at 14, 16. In discussing claim construction, Petitioner does not offer alternative constructions, but instead exclusively relies on the construction ascribed to Patent Owner. *Id.* at 15–16.

For similar reasons discussed above with respect to "path parameter information," Petitioner has not presented a compelling, meritorious case that the claim construction of the "predistorting. . ." limitation applied in the Petition is correct based on the present record. Petitioner expressly criticizes the construction it offers as being inconsistent with the plain and ordinary meaning of the claim language, and with the '347 patent Specification. Pet. 14, 16. Additionally, Petitioner does not explain why the applied construction is correct, and Patent Owner does not expressly agree with the construction or provide reasons why it is correct. Pet. 15–16; Prelim. Resp. 5–17.

Petitioner also makes clear that it is relying on Patent Owner's purported construction of the "predistorting . . ." claim language when applying the claims to the prior art. Pet. 38–43. Specifically, when comparing limitation [1.5] to Sesia, Petitioner asserts that:

> Sesia discloses and/or renders obvious "predistorting a second signal at the transmitter in a time domain, a frequency domain, and a spatial domain, according to the channel estimation based on the first signal" ***in light of Patent Owner's apparent interpretation of this limitation based on its infringement contentions in the related District Court proceedings***. As discussed above, ***Patent Owner interprets*** "predistorting a second signal at the transmitter in a time domain, a frequency domain, and a spatial domain" as broad enough to include beamforming a wireless signal and/or scheduling of transmission resources in the time and frequency domains.
>
> As described above in Section VIII and incorporated by reference herein, ***Sesia discloses multiple methods of beamforming*** a wireless signal based on path parameter information obtained from reference signals.

Pet. 38–39 (citing Ex. 1005 ¶¶ 146–159); *see id.* at 42 (one of ordinary skill would "readily appreciated that an eNodeB can be configured to 'predistort'

(or 'beamform' as Patent Owner interprets the limitation)"), 43 ("Thus, Sesia discloses and/or renders obvious" the "predistorting" limitation "as recited in Claim 1 under Patent Owner's apparent interpretation of the claims which is broad enough to capture beamforming a wireless signal.").

Consequently, we determine that Petitioner has not made a compelling, meritorious showing that "predistorting a second signal at the transmitter in a time domain, frequency domain, and a spatial domain," as required by the challenged claims, is disclosed by or would have been obvious over Sesia. Thus, we find that factor 6 does not favor institution.

7. Conclusion

We take "a holistic view of whether efficiency and integrity of the system are best served by denying or instituting review." *Fintiv* Order, at 6. As discussed above, we find that factors 1–5 favor exercising our discretion to deny institution. As further discussed above, we find that the merits are not compelling and thus factor 6 does not weigh in favor of institution. For these reasons, we find that it is appropriate for us to exercise our discretion under 35 U.S.C. § 314(a) to deny institution of *inter partes* review in this case.

III. ORDER

In consideration of the foregoing, it is hereby:

ORDERED that, pursuant to 35 U.S.C. § 314(a), an *inter partes* review is not instituted for challenged claim 1 of the '347 patent.

For PETITIONER:

John D. Haynes
David S. Frist
Michael C. Deane
ALSTON & BIRD LLP
John.Haynes@alston.com
David.Frist@alston.com
Michael.Deane@alston.com

For PATENT OWNER:

Reza Mirzaie
Amy E. Hayden
Neil Rubin
Peter Tong
RUSS, AUGUST & KABAT
rmirzaie@raklaw.com
ahayden@raklaw.com
nrubin@raklaw.com
ptong@raklaw.com

Kenneth J. Weatherwax
Parham Hendifar
LOWENSTEIN & WEATHERWAX LLP
weatherwax@lowensteinweatherwax.com
hendifar@lowensteinweatherwax.com

AO 120 (Rev. 08/10)

TO: Mail Stop 8 Director of the U.S. Patent and Trademark Office P.O. Box 1450 Alexandria, VA 22313-1450	**REPORT ON THE FILING OR DETERMINATION OF AN ACTION REGARDING A PATENT OR TRADEMARK**

In Compliance with 35 U.S.C. § 290 and/or 15 U.S.C. § 1116 you are hereby advised that a court action has been filed in the U.S. District Court Eastern District of Texas on the following

☐ Trademarks or ☑ Patents. (☐ the patent action involves 35 U.S.C. § 292.):

DOCKET NO.	DATE FILED	U.S. DISTRICT COURT
2:23-cv-00285	6/16/2023	Eastern District of Texas

PLAINTIFF	DEFENDANT
COBBLESTONE WIRELESS, LLC	SAMSUNG ELECTRONICS CO., LTD., SAMSUNG ELECTRONICS AMERICA, INC.,

PATENT OR TRADEMARK NO.	DATE OF PATENT OR TRADEMARK	HOLDER OF PATENT OR TRADEMARK
1 8,891,347	11/18/2014	COBBLESTONE WIRELESS, LLC
2 9,094,888	7/28/2015	COBBLESTONE WIRELESS, LLC
3 10,368,361	7/30/2019	COBBLESTONE WIRELESS, LLC
4 8,554,196	10/8/2013	COBBLESTONE WIRELESS, LLC
5 7.924,802	4/12/2011	COBBLESTONE WIRELESS, LLC

In the above—entitled case, the following patent(s)/ trademark(s) have been included:

DATE INCLUDED	INCLUDED BY ☐ Amendment ☐ Answer ☐ Cross Bill ☐ Other Pleading	
PATENT OR TRADEMARK NO.	DATE OF PATENT OR TRADEMARK	HOLDER OF PATENT OR TRADEMARK
1		
2		
3		
4		
5		

In the above—entitled case, the following decision has been rendered or judgement issued:

DECISION/JUDGEMENT

CLERK	(BY) DEPUTY CLERK	DATE

Copy 1—Upon initiation of action, mail this copy to Director **Copy 3—Upon termination of action, mail this copy to Director**
Copy 2—Upon filing document adding patent(s), mail this copy to Director **Copy 4—Case file copy**

Print Save As... Reset

UNITED STATES PATENT AND TRADEMARK OFFICE

UNITED STATES DEPARTMENT OF COMMERCE
United States Patent and Trademark Office
Address: COMMISSIONER FOR PATENTS
P.O. Box 1450
Alexandria, Virginia 22313-1450
www.uspto.gov

APPLICATION NUMBER	PATENT NUMBER	GROUP ART UNIT	REQUEST ID
13/522,422	8891347	2473	29711

PAIR Correspondence Address/Fee Address Change

The following fields have been changed to Customer Number 144521 on 12/05/2016 via Private PAIR in view of the certification copied below that authorized the change.

- Correspondence Address

The address for Customer Number 144521 is:
144521
Xinova, LLC
701 5th AVE
Suite 4100
Seattle, WA 98104

I certify, in accordance with 37 CFR 1.4(d)(4) that I am:

An attorney or Agent of Record registered to practice before the Patent and Trademark Office who has been given power of attorney in this application

Signature:	/R. Burns Israelsen/
Name:	R. Burns Israelsen
Registration Number:	42685

UNITED STATES PATENT AND TRADEMARK OFFICE

UNITED STATES DEPARTMENT OF COMMERCE
United States Patent and Trademark Office
Address: COMMISSIONER FOR PATENTS
P.O. Box 1450
Alexandria, Virginia 22313-1450
www.uspto.gov

APPLICATION NUMBER	PATENT NUMBER	GROUP ART UNIT	REQUEST ID
13/522,422	8891347	2473	29711

PAIR Correspondence Address/Fee Address Change

The following fields have been changed to Customer Number 144521 on 12/05/2016 via Private PAIR in view of the certification copied below that authorized the change.

- Maintenance Fee Address

The address for Customer Number 144521 is:
144521
Xinova, LLC
701 5th AVE
Suite 4100
Seattle, WA 98104

I certify, in accordance with 37 CFR 1.4(d)(4) that I am:

An attorney or Agent of Record registered to practice before the Patent and Trademark Office who has been given power of attorney in this application

Signature:	/R. Burns Israelsen/
Name:	R. Burns Israelsen
Registration Number:	42685

UNITED STATES PATENT AND TRADEMARK OFFICE

CERTIFICATE OF CORRECTION

PATENT NO. : 8,891,347 B2
APPLICATION NO. : 13/522422
DATED : November 18, 2014
INVENTOR(S) : Yin

It is certified that error appears in the above-identified patent and that said Letters Patent is hereby corrected as shown below:

In The Drawings

In Fig. 3, Sheet 2 of 4, delete "UP/UC/DSP" and insert -- μP/μC/DSP --, therefor. (See Attached Sheet)

In The Specification

In Column 1, below Title, insert -- RELATED APPLICATION DATA
The present application is a U.S. national stage filing under 35 U.S.C. §371 of International Application No. PCT/CN2011/077718, filed on July 28, 2011, the entire contents of which are incorporated herein by reference. --.

In Column 6, Line 39, delete "and or" and insert -- and/or --, therefor.

In Column 8, Line 29, delete "Signal" and insert -- SIgnal --, therefor.

In Column 9, Line 34, delete "i–1,2" and insert -- i–1,2, --, therefor.

In Column 9, Line 35, delete "Where" and insert -- where --, therefor.

In Column 9, Line 41, delete "$c_{Tx}(\Omega_1)$ and c_{Rx}*" and insert -- $c^*_{Tx}(\Omega_1)$ and $c^*_{Rx}(\Omega_1)$ --, therefor.

In The Claims

In Column 17, Line 27, in Claim 6, delete "comprisingequalizing" and insert -- comprising equalizing --, therefor.

Signed and Sealed this
Ninth Day of June, 2015

Michelle K. Lee

Michelle K. Lee
Director of the United States Patent and Trademark Office

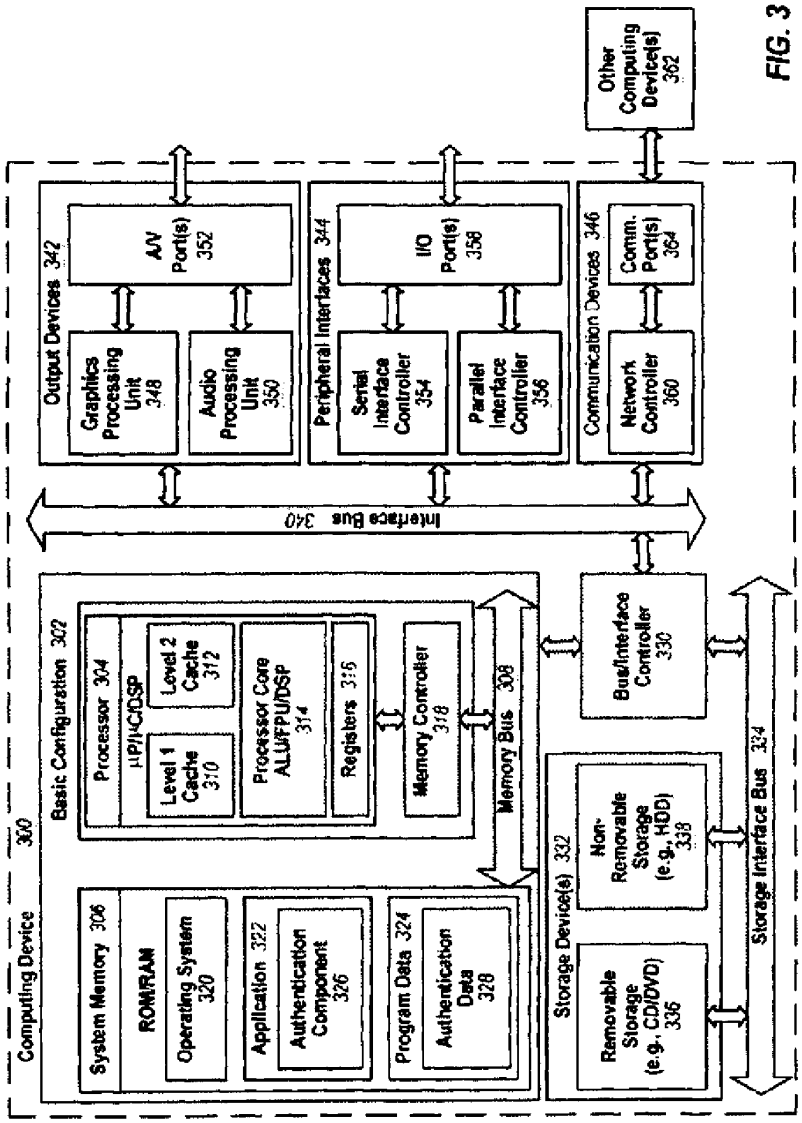
Computing Device 300
Basic Configuration 302
Processor 304
μP/μC/DSP
Level 1 Cache 310
Level 2 Cache 312
Processor Core ALU/FPU/DSP 314
Registers 316
Memory Controller 318
Memory Bus 308
System Memory 306
ROM/RAM
Operating System 320
Application 322
Authentication Component 326
Program Data 324
Authentication Data 328
Storage Device(s) 332
Removable Storage (e.g., CD/DVD) 336
Non-Removable Storage (e.g., HDD) 338
Bus/Interface Controller 330
Storage Interface Bus 334
Interface Bus 340
Output Devices 342
Graphics Processing Unit 348
Audio Processing Unit 350
A/V Port(s) 352
Peripheral Interfaces 344
Serial Interface Controller 354
Parallel Interface Controller 356
I/O Port(s) 358
Communication Devices 346
Network Controller 360
Comm. Port(s) 364
Other Computing Device(s) 362

FIG. 3

Response to the Request for Certificate of Correction	Patent No. 8891347	Applicant(s) Yin
	Issue Date Nov. 18, 2014	Docket No. 11013.1008US01

This is in response to the request for a Certificate of Correction filed March 11, 2015

☑ **Request Approval- In- Part** – Consideration has been given to your request for the issuance of a Certificate of Correction under the provisions of 37 CFR 1.322 and/or 37 CFR 1.323. The Request is improper and approved in part for the reason(s) below:

☐ **Supersede/Vacate** – The Certificate of Correction issued in error, in that error(s) was made in identifying the patent number and/or keying text/corrections. See 'Other Comments' below.

1. ☐ Assignees' names and addresses (assignment data) printed in a patent, are based solely on information supplied in the appropriate space for identifying the assignment data on the Issue Fee Transmittal Form (PTOL-85b). Any request for a patent to be corrected to state the name of the assignee, must state that the assignment was submitted for recordation as set forth in in 37 CFR 3.11 before issuance of the patent. Petition under 3.81 is to be filed for consideration of correction to assignee. The petition fee set forth in 37 CFR 1.17(i)(1) (currently $140, $70, $35 for large, small and micro entities, respectively.

2. ☐ The alleged error in . . is in fact an Amendment and/or Change made by the examiner and considered to be in accordance with the permissible amendments enumerated in the Manual of Patent Examining Procedure (MPEP) Section 1302.04. Applicant did not file objection or amendment under 37 CFR 1.312 prior to payment of the issue fee.

3. ☐ A petition under CFR 1.182 is required to correct the alleged errors in spelling or order of inventor's names, since inventor's names are printed solely in accordance with the type-written names, and in the order of the type-written names on the Application Data Sheet (ADS).

4. ☐ With respect to the alleged error in changing the inventor name on the patent due to clerical error in ADS/OATH of related patents. The inventor's name is printed in accordance with the OATH/ADS submitted at the time of filing the application. However, your attention is directed to C.F.R. 1.324, wherein a request is being made to change, add or delete inventor(s), after issuance of the patent.

5. ☐ With respect to the alleged error in comparison of the printed patent with the corresponding location in the application file reveals that there is no discrepancy.

6. ☐ With respect to 37 CFR 1.72, the title should be brief but technically accurate and descriptive and should contain fewer than 500 characters. Inasmuch as the words "new," "improved," "improvement of," and "improvement in" are not considered as part of the title of an invention, these words should not be included at the beginning of the title of the invention and will be deleted when the Office enters the title into the Office's computer records, and when any patent issues.

7. ☐ The fee for correction under 37 CFR 1.323 is set forth in 37 CFR 1.20(a). ☐ Partial fee ☐ No fee was received with your request. Full fee payment is required before further action is taken on this request.

8. ☐ With respect to the request for corrected Letters Patent (Grant), corrections to the original Letters Patent are made under the provisions of Rule 1.322(b), not Rule1.323, unless a petition is granted.

9. ☑ **Other Comments:** **Col. 1, line 3 "CROSS-REFERENCE TO RELATED APPLICATION" is changed to read – RELATED APPLICATION DATA –; Also, Col. 9, line 41 –** $c_{\mu\nu}^{*}(\Omega_i)$ and $c_{\mu\nu}^{*}(\Omega_i)$ is inserted to read as shown in the records of this office.

Further correspondence concerning this matter should be filed and directed to the Certificates of Correction Branch.

Legal Instrument Examiner: Ms. Angela Green Phone: 571-272-9005

Certificates of Correction Branch email: CustomerServiceCoC@uspto.gov CoC Central Phone Number: (703) 756-1814

If applicable, information regarding a petition under 37 CFR 1.183 should be directed to the attention of the Commissioner for Patents using the FAX number (571) 273-8300

U.S. Patent and Trademark Office Part of Paper No.
PTO-999_CofC (Rev. 10/2014)

IN THE UNITED STATES PATENT & TRADEMARK OFFICE

PATENT NO.: 8,891,347

USPTO CONFIRMATION CODE: 1084

APPLICATION NO.: 13/522,422

PCT FILED: July 28, 2011

U.S. FILED: July 16, 2012

EXAMINER: Kwang B. Yao

GROUP ART UNIT: 2473

FOR: USER-FOCUSING TECHNIQUE FOR WIRELESS COMMUNICATION SYSTEMS

37 CFR 1.322 & 37 CFR 1.323 REQUEST FOR CERTIFICATE OF CORRECTION FOR USPTO AND/OR APPLICANT MISTAKE

Commissioner for Patents
Office of Patent Publication
ATTN: Certificate of Correction Branch
P.O. Box 1450
Alexandria, VA 22313-1450

Dear Sir:

A certificate of correction under 35 USC 254 is respectfully requested in the above-identified patent.

It is believed that all errors identified herein were the fault of both the applicant and USPTO and, accordingly, please charge **$100.00** to the Credit Card utilized for this certificate of correction filing. In the event that a further fee is required, please charge the amount to the same Credit Card.

The exact locations where the errors appear in the patent and patent application are as follows:

In Fig. 3, Sheet 2 of 4, delete "UP/UC/DSP" and insert - - μP/μC/DSP - -, therefor.
(REPLACEMENT SHEET DATED OCTOBER 8, 2014, SHEET 2/4 (PAGE 25 OF FW), FIGURE 3)

In Column 1, below Title,
insert - - CROSS-REFERENCE TO RELATED APPLICATION
The present application is a U.S national stage filing under 35 U.S.C. §371 of International Application No. PCT/CN2011/077718, filed on July 28, 2011, the entire contents of which are incorporated herein by reference. - -.
(ORIGINALLY FILED SPECIFICATION DATED JULY 16, 2012, PAGE 1, BELOW TITLE)

In Column 6, Line 39, delete "and or" and insert - - and/or - -, therefor.
(ORIGINALLY FILED SPECIFICATION DATED JULY 16, 2012, PAGE 9, LINE 1)

In Column 8, Line 29, delete "Signal" and insert - - SIgnal - -, therefor.
(ORIGINALLY FILED SPECIFICATION DATED JULY 16, 2012, PAGE 11, LINE 21)

In Column 9, Line 34, delete "i=1,2" and insert - - i=1,2, - -, therefor.
(ORIGINALLY FILED SPECIFICATION DATED JULY 16, 2012, PAGE 13, LINE 7)

In Column 9, Line 35, delete "Where" and insert - - where - -, therefor.
(ORIGINALLY FILED SPECIFICATION DATED JULY 16, 2012, PAGE 13, LINE 8)

In Column 9, Line 41, delete "$c_{Tx}(\Omega_1)$ and c_{Rx}*" and
insert - - c_{Tx}*(Ω_1) and c_{Rx}*(Ω_1) - -, therefor.
(ORIGINALLY FILED SPECIFICATION DATED JULY 16, 2012, PAGE 13, LINE 12)

In Column 17, Line 27, in Claim 6, delete "comprisingequalizing" and
insert - - comprising equalizing - -, therefor.
(AMENDMENTS TO THE CLAIMS DATED OCTOBER 8, 2014, PAGE 6 OF 13, CLAIM 8, LINES 1-2)

The requested corrections are attached on Form PTO/SB/44.

Dated this 11th day of March, 2015.

Respectfully Submitted,

/R. Burns Israelsen/ Reg. # 42,685
R. BURNS ISRAELSEN
Acting in Representative Capacity
(37 CFR 1.34)
Registration No. 42,685
Telephone No. (435) 252-1360

PTO/SB/44 (09-07)
Approved for use through 08/31/2013. OMB 0651-0033
U.S. Patent and Trademark Office; U.S. DEPARTMENT OF COMMERCE
Under the Paperwork Reduction Act of 1995, no persons are required to respond to a collection of information unless it displays a valid OMB control number.
(Also Form PTO-1050)

UNITED STATES PATENT AND TRADEMARK OFFICE
CERTIFICATE OF CORRECTION

PATENT NO. : 8,891,347 B2

APPLICATION NO. : 13/522,422

ISSUE DATE : November 18, 2014

INVENTOR(S) : Yin

It is certified that an error appears or errors appear in the above-identified patent and that said Letters Patent is hereby corrected as shown below:

In Fig. 3, Sheet 2 of 4, delete "UP/UC/DSP" and insert - - μP/μC/DSP - -, therefor.

In Column 1, below Title, insert - - CROSS-REFERENCE TO RELATED APPLICATION The present application is a U.S national stage filing under 35 U.S.C. §371 of International Application No. PCT/CN2011/077718, filed on July 28, 2011, the entire contents of which are incorporated herein by reference. - -.

In Column 6, Line 39, delete "and or" and insert - - and/or - -, therefor.

In Column 8, Line 29, delete "Signal" and insert - - SIgnal - -, therefor.

In Column 9, Line 34, delete "i=1,2" and insert - - i=1,2, - -, therefor.

In Column 9, Line 35, delete "Where" and insert - - where - -, therefor.

In Column 9, Line 41, delete "$c_{Tx}(\Omega_1)$ and c_{Rx}*" and insert - - c_{Tx}*(Ω_1) and c_{Rx}*(Ω_1) - -, therefor.

MAILING ADDRESS OF SENDER (Please do not use customer number below):

Maschoff Brennan
1389 Center Drive, Suite 300
Park City, Utah 84098, United States

This collection of information is required by 37 CFR 1.322, 1.323, and 1.324. The information is required to obtain or retain a benefit by the public which is to file (and by the USPTO to process) an application. Confidentiality is governed by 35 U.S.C. 122 and 37 CFR 1.14. This collection is estimated to take 1.0 hour to complete, including gathering, preparing, and submitting the completed application form to the USPTO. Time will vary depending upon the individual case. Any comments on the amount of time you require to complete this form and/or suggestions for reducing this burden, should be sent to the Chief Information Officer, U.S. Patent and Trademark Office, U.S. Department of Commerce, P.O. Box 1450, Alexandria, VA 22313-1450. DO NOT SEND FEES OR COMPLETED FORMS TO THIS ADDRESS. **SEND TO: Attention Certificate of Corrections Branch, Commissioner for Patents, P.O. Box 1450, Alexandria, VA 22313-1450.**

If you need assistance in completing the form, call 1-800-PTO-9199 and select option 2.

PTO/SB/44 (09-07)
Approved for use through 08/31/2013. OMB 0651-0033
U.S. Patent and Trademark Office; U.S. DEPARTMENT OF COMMERCE
Under the Paperwork Reduction Act of 1995, no persons are required to respond to a collection of information unless it displays a valid OMB control number.
(Also Form PTO-1050)

UNITED STATES PATENT AND TRADEMARK OFFICE
CERTIFICATE OF CORRECTION

PATENT NO. : 8,891,347 B2

APPLICATION NO. : 13/522,422

ISSUE DATE : November 18, 2014

INVENTOR(S) : Yin

It is certified that an error appears or errors appear in the above-identified patent and that said Letters Patent is hereby corrected as shown below:

In Column 17, Line 27, in Claim 6, delete “comprisingequalizing” and insert - - comprising equalizing - -, therefor.

MAILING ADDRESS OF SENDER (Please do not use customer number below):

Maschoff Brennan
1389 Center Drive, Suite 300
Park City, Utah 84098, United States

This collection of information is required by 37 CFR 1.322, 1.323, and 1.324. The information is required to obtain or retain a benefit by the public which is to file (and by the USPTO to process) an application. Confidentiality is governed by 35 U.S.C. 122 and 37 CFR 1.14. This collection is estimated to take 1.0 hour to complete, including gathering, preparing, and submitting the completed application form to the USPTO. Time will vary depending upon the individual case. Any comments on the amount of time you require to complete this form and/or suggestions for reducing this burden, should be sent to the Chief Information Officer, U.S. Patent and Trademark Office, U.S. Department of Commerce, P.O. Box 1450, Alexandria, VA 22313-1450. DO NOT SEND FEES OR COMPLETED FORMS TO THIS ADDRESS. **SEND TO: Attention Certificate of Corrections Branch, Commissioner for Patents, P.O. Box 1450, Alexandria, VA 22313-1450.**

If you need assistance in completing the form, call 1-800-PTO-9199 and select option 2.

Privacy Act Statement

The **Privacy Act of 1974 (P.L. 93-579)** requires that you be given certain information in connection with your submission of the attached form related to a patent application or patent. Accordingly, pursuant to the requirements of the Act, please be advised that: (1) the general authority for the collection of this information is 35 U.S.C. 2(b)(2); (2) furnishing of the information solicited is voluntary; and (3) the principal purpose for which the information is used by the U.S. Patent and Trademark Office is to process and/or examine your submission related to a patent application or patent. If you do not furnish the requested information, the U.S. Patent and Trademark Office may not be able to process and/or examine your submission, which may result in termination of proceedings or abandonment of the application or expiration of the patent.

The information provided by you in this form will be subject to the following routine uses:

1. The information on this form will be treated confidentially to the extent allowed under the Freedom of Information Act (5 U.S.C. 552) and the Privacy Act (5 U.S.C 552a). Records from this system of records may be disclosed to the Department of Justice to determine whether disclosure of these records is required by the Freedom of Information Act.
2. A record from this system of records may be disclosed, as a routine use, in the course of presenting evidence to a court, magistrate, or administrative tribunal, including disclosures to opposing counsel in the course of settlement negotiations.
3. A record in this system of records may be disclosed, as a routine use, to a Member of Congress submitting a request involving an individual, to whom the record pertains, when the individual has requested assistance from the Member with respect to the subject matter of the record.
4. A record in this system of records may be disclosed, as a routine use, to a contractor of the Agency having need for the information in order to perform a contract. Recipients of information shall be required to comply with the requirements of the Privacy Act of 1974, as amended, pursuant to 5 U.S.C. 552a(m).
5. A record related to an International Application filed under the Patent Cooperation Treaty in this system of records may be disclosed, as a routine use, to the International Bureau of the World Intellectual Property Organization, pursuant to the Patent Cooperation Treaty.
6. A record in this system of records may be disclosed, as a routine use, to another federal agency for purposes of National Security review (35 U.S.C. 181) and for review pursuant to the Atomic Energy Act (42 U.S.C. 218(c)).
7. A record from this system of records may be disclosed, as a routine use, to the Administrator, General Services, or his/her designee, during an inspection of records conducted by GSA as part of that agency's responsibility to recommend improvements in records management practices and programs, under authority of 44 U.S.C. 2904 and 2906. Such disclosure shall be made in accordance with the GSA regulations governing inspection of records for this purpose, and any other relevant (*i.e.*, GSA or Commerce) directive. Such disclosure shall not be used to make determinations about individuals.
8. A record from this system of records may be disclosed, as a routine use, to the public after either publication of the application pursuant to 35 U.S.C. 122(b) or issuance of a patent pursuant to 35 U.S.C. 151. Further, a record may be disclosed, subject to the limitations of 37 CFR 1.14, as a routine use, to the public if the record was filed in an application which became abandoned or in which the proceedings were terminated and which application is referenced by either a published application, an application open to public inspection or an issued patent.
9. A record from this system of records may be disclosed, as a routine use, to a Federal, State, or local law enforcement agency, if the USPTO becomes aware of a violation or potential violation of law or regulation.

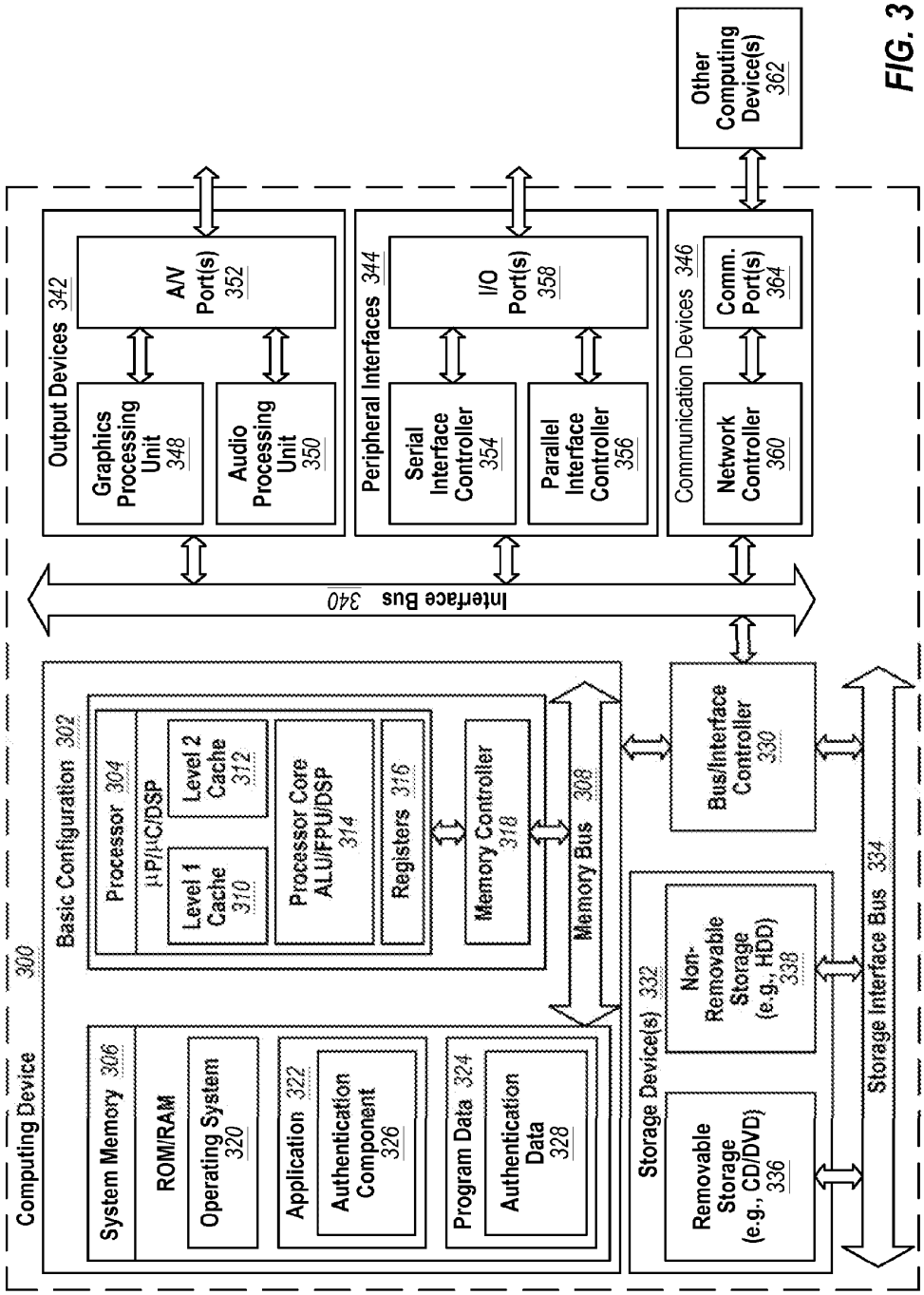
Computing Device 300
Basic Configuration 302
Processor 304
µP/µC/DSP
Level 1 Cache 310
Level 2 Cache 312
Processor Core ALU/FPU/DSP 314
Registers 316
Memory Controller 318
Memory Bus 308
System Memory 306
ROM/RAM
Operating System 320
Application 322
Authentication Component 326
Program Data 324
Authentication Data 328
Storage Device(s) 332
Non-Removable Storage (e.g., HDD) 338
Removable Storage (e.g., CD/DVD) 336
Bus/Interface Controller 330
Storage Interface Bus 334
Interface Bus 340
Output Devices 342
Graphics Processing Unit 348
A/V Port(s) 352
Audio Processing Unit 350
Peripheral Interfaces 344
Serial Interface Controller 354
I/O Port(s) 358
Parallel Interface Controller 356
Communication Devices 346
Network Controller 360
Comm. Port(s) 364
Other Computing Device(s) 362

FIG. 3

Electronic Patent Application Fee Transmittal

Application Number:	13522422
Filing Date:	16-Jul-2012
Title of Invention:	USER-FOCUSING TECHNIQUE FOR WIRELESS COMMUNICATION SYSTEMS
First Named Inventor/Applicant Name:	Xuefeng Yin
Filer:	Robert Burns Israelsen/Vanessa Mangum
Attorney Docket Number:	I1013.10038US01

Filed as Large Entity

Filing Fees for U.S. National Stage under 35 USC 371

Description	Fee Code	Quantity	Amount	Sub-Total in USD($)
Basic Filing:				
Pages:				
Claims:				
Miscellaneous-Filing:				
Petition:				
Patent-Appeals-and-Interference:				
Post-Allowance-and-Post-Issuance:				
Certificate of Correction	1811	1	100	100

Description	Fee Code	Quantity	Amount	Sub-Total in USD($)
Extension-of-Time:				
Miscellaneous:				
		Total in USD ($)		**100**

Electronic Acknowledgement Receipt	
EFS ID:	21737929
Application Number:	13522422
International Application Number:	
Confirmation Number:	1084
Title of Invention:	USER-FOCUSING TECHNIQUE FOR WIRELESS COMMUNICATION SYSTEMS
First Named Inventor/Applicant Name:	Xuefeng Yin
Customer Number:	97149
Filer:	Robert Burns Israelsen/Vanessa Mangum
Filer Authorized By:	Robert Burns Israelsen
Attorney Docket Number:	I1013.10038US01
Receipt Date:	11-MAR-2015
Filing Date:	16-JUL-2012
Time Stamp:	14:23:13
Application Type:	U.S. National Stage under 35 USC 371

Payment information:

Submitted with Payment	yes
Payment Type	Credit Card
Payment was successfully received in RAM	$100
RAM confirmation Number	595
Deposit Account	
Authorized User	
The Director of the USPTO is hereby authorized to charge indicated fees and credit any overpayment as follows:	

File Listing:

Document Number	Document Description	File Name	File Size(Bytes)/ Message Digest	Multi Part /.zip	Pages (if appl.)
1	Request for Certificate of Correction	CN-810895-02-US-NAT_2015-03-11_Request.pdf	166033 ef63b2ae61f53155540d60a573fa439d565505051	no	3
Warnings:					
Information:					
2	Request for Certificate of Correction	CN-810895-02-US-NAT_2015-03-11_CoC.pdf	285671 2887bc5e9b85b7e129842f0159a965e65a53a0f6	no	3
Warnings:					
Information:					
3	Drawings-only black and white line drawings	CN-810895-02-US-NAT_2015-03-11_Replacement.pdf	236292 c374a8abcdbfafc1cdc8dededb686f3e082f7c64	no	1
Warnings:					
Information:					
4	Fee Worksheet (SB06)	fee-info.pdf	30656 122624431333b7ee7c753b667257873a42385ef8	no	2
Warnings:					
Information:					
		Total Files Size (in bytes):	718652		

This Acknowledgement Receipt evidences receipt on the noted date by the USPTO of the indicated documents, characterized by the applicant, and including page counts, where applicable. It serves as evidence of receipt similar to a Post Card, as described in MPEP 503.

<u>New Applications Under 35 U.S.C. 111</u>
If a new application is being filed and the application includes the necessary components for a filing date (see 37 CFR 1.53(b)-(d) and MPEP 506), a Filing Receipt (37 CFR 1.54) will be issued in due course and the date shown on this Acknowledgement Receipt will establish the filing date of the application.

<u>National Stage of an International Application under 35 U.S.C. 371</u>
If a timely submission to enter the national stage of an international application is compliant with the conditions of 35 U.S.C. 371 and other applicable requirements a Form PCT/DO/EO/903 indicating acceptance of the application as a national stage submission under 35 U.S.C. 371 will be issued in addition to the Filing Receipt, in due course.

<u>New International Application Filed with the USPTO as a Receiving Office</u>
If a new international application is being filed and the international application includes the necessary components for an international filing date (see PCT Article 11 and MPEP 1810), a Notification of the International Application Number and of the International Filing Date (Form PCT/RO/105) will be issued in due course, subject to prescriptions concerning national security, and the date shown on this Acknowledgement Receipt will establish the international filing date of the application.

UNITED STATES PATENT AND TRADEMARK OFFICE

UNITED STATES DEPARTMENT OF COMMERCE
United States Patent and Trademark Office
Address: COMMISSIONER FOR PATENTS
P.O. Box 1450
Alexandria, Virginia 22313-1450
www.uspto.gov

APPLICATION NO.	ISSUE DATE	PATENT NO.	ATTORNEY DOCKET NO.	CONFIRMATION NO.
13/522,422	11/18/2014	8891347	I1013.10038US01	1084

97149 7590 10/29/2014
Maschoff Brennan
1389 Center Drive, Suite 300
Park City, UT 84098

ISSUE NOTIFICATION

The projected patent number and issue date are specified above.

Determination of Patent Term Adjustment under 35 U.S.C. 154 (b)
(application filed on or after May 29, 2000)

The Patent Term Adjustment is 178 day(s). Any patent to issue from the above-identified application will include an indication of the adjustment on the front page.

If a Continued Prosecution Application (CPA) was filed in the above-identified application, the filing date that determines Patent Term Adjustment is the filing date of the most recent CPA.

Applicant will be able to obtain more detailed information by accessing the Patent Application Information Retrieval (PAIR) WEB site (http://pair.uspto.gov).

Any questions regarding the Patent Term Extension or Adjustment determination should be directed to the Office of Patent Legal Administration at (571)-272-7702. Questions relating to issue and publication fee payments should be directed to the Application Assistance Unit (AAU) of the Office of Data Management (ODM) at (571)-272-4200.

APPLICANT(s) (Please see PAIR WEB site http://pair.uspto.gov for additional applicants):

Xuefeng Yin, Shanghai, CHINA;

The United States represents the largest, most dynamic marketplace in the world and is an unparalleled location for business investment, innovation, and commercialization of new technologies. The USA offers tremendous resources and advantages for those who invest and manufacture goods here. Through SelectUSA, our nation works to encourage and facilitate business investment. To learn more about why the USA is the best country in the world to develop technology, manufacture products, and grow your business, visit SelectUSA.gov.

IR103 (Rev. 10/09)

UNITED STATES PATENT AND TRADEMARK OFFICE

UNITED STATES DEPARTMENT OF COMMERCE
United States Patent and Trademark Office
Address: COMMISSIONER FOR PATENTS
P.O. Box 1450
Alexandria, Virginia 22313-1450
www.uspto.gov

APPLICATION NO.	FILING DATE	FIRST NAMED INVENTOR	ATTORNEY DOCKET NO.	CONFIRMATION NO.
13/522,422	07/16/2012	Xuefeng Yin	I1013.10038US01	1084

97149 7590 10/21/2014
Maschoff Brennan
1389 Center Drive, Suite 300
Park City, UT 84098

EXAMINER
DUDA, ADAM K

ART UNIT	PAPER NUMBER
2473	

NOTIFICATION DATE	DELIVERY MODE
10/21/2014	ELECTRONIC

Please find below and/or attached an Office communication concerning this application or proceeding.

The time period for reply, if any, is set in the attached communication.

Notice of the Office communication was sent electronically on above-indicated "Notification Date" to the following e-mail address(es):

docket@mabr.com
info@mabr.com

PTOL-90A (Rev. 04/07)

Response to Rule 312 Communication	Application No.	Applicant(s)
	13/522,422	YIN, XUEFENG
	Examiner	**Art Unit**
	ADAM DUDA	2473

-- The MAILING DATE of this communication appears on the cover sheet with the correspondence address --

1. ☒ The amendment filed on *10/08/2014* under 37 CFR 1.312 has been considered, and has been:

a) ☐ entered.

b) ☒ entered as directed to matters of form not affecting the scope of the invention.

c) ☐ disapproved because the amendment was filed after the payment of the issue fee.
Any amendment filed after the date the issue fee is paid must be accompanied by a petition under 37 CFR 1.313(c)(1) and the required fee to withdraw the application from issue.

d) ☐ disapproved. See explanation below.

e) ☐ entered in part. See explanation below.

Amendments to the specification (¶22, 25, 29, 62, 68, 69, & 73), amendments to the claims (Claims 12, 18, 21, 27, 33, & 34), and amendments to the figures (FIG. 3) are entered as directed to matters of form not affecting the scope of the invention.

/KWANG B YAO/ Supervisory Patent Examiner, Art Unit 2473	/ADAM DUDA/ Examiner, Art Unit 2473

IN THE UNITED STATES PATENT AND TRADEMARK OFFICE

In re application of	Xuefeng YIN	
Application No.:	13/522,422	Art Unit 2473
Filed:	July 16, 2012	
Conf. No.:	1084	
For:	USER-FOCUSING TECHNIQUE FOR WIRELESS COMMUNICATION SYSTEMS	
Examiner:	Adam K. DUDA	
Customer No.:	97149	
Attorney Docket No.:	I1013.10038US01	

AMENDMENT UNDER 37 C.F.R. §1.312

Mail Stop ISSUE FEE
Commissioner for Patents
P.O. Box 1450
Alexandria, VA 22313-1450

Dear Sir:

In response to the Notice of Allowance mailed July 8, 2014, please amend the above-identified application as follows:

Amendments to the Specification begin on page 2 of this paper. **Amendments to the Claims** are reflected in the listing of claims which begins on page 5 of this paper. **Amendments to the Drawings** begin on page 12 of this paper and include both an attached replacement sheet and an annotated sheet showing changes. **Remarks** begin on page 13 of this paper.

CONSIDERED: /A.D./
OK TO ENTER: /A.D./

PART B - FEE(S) TRANSMITTAL

Complete and send this form, together with applicable fee(s), to: Mail **Mail Stop ISSUE FEE**
Commissioner for Patents
P.O. Box 1450
Alexandria, Virginia 22313-1450
or Fax (571)-273-2885

INSTRUCTIONS: This form should be used for transmitting the ISSUE FEE and PUBLICATION FEE (if required). Blocks 1 through 5 should be completed where appropriate. All further correspondence including the Patent, advance orders and notification of maintenance fees will be mailed to the current correspondence address as indicated unless corrected below or directed otherwise in Block 1, by (a) specifying a new correspondence address; and/or (b) indicating a separate "FEE ADDRESS" for maintenance fee notifications.

CURRENT CORRESPONDENCE ADDRESS (Note: Use Block 1 for any change of address)

97149 7590 07/08/2014
Maschoff Brennan
1389 Center Drive, Suite 300
Park City, UT 84098

Note: A certificate of mailing can only be used for domestic mailings of the Fee(s) Transmittal. This certificate cannot be used for any other accompanying papers. Each additional paper, such as an assignment or formal drawing, must have its own certificate of mailing or transmission.

Certificate of Mailing or Transmission
I hereby certify that this Fee(s) Transmittal is being deposited with the United States Postal Service with sufficient postage for first class mail in an envelope addressed to the Mail Stop ISSUE FEE address above, or being facsimile transmitted to the USPTO (571) 273-2885, on the date indicated below.

(Depositor's name)
(Signature)
(Date)

APPLICATION NO.	FILING DATE	FIRST NAMED INVENTOR	ATTORNEY DOCKET NO.	CONFIRMATION NO.
13/522,422	07/16/2012	Xuefeng Yin	I1013.10038US01	1084

TITLE OF INVENTION: USER-FOCUSING TECHNIQUE FOR WIRELESS COMMUNICATION SYSTEMS

APPLN. TYPE	ENTITY STATUS	ISSUE FEE DUE	PUBLICATION FEE DUE	PREV. PAID ISSUE FEE	TOTAL FEE(S) DUE	DATE DUE
nonprovisional	UNDISCOUNTED	$960	$0	$0	$960	10/08/2014

EXAMINER	ART UNIT	CLASS-SUBCLASS
DUDA, ADAM K	2473	370-252000

1. Change of correspondence address or indication of "Fee Address" (37 CFR 1.363).
- ☐ Change of correspondence address (or Change of Correspondence Address form PTO/SB/122) attached.
- ☐ "Fee Address" indication (or "Fee Address" Indication form PTO/SB/47; Rev 03-02 or more recent) attached. **Use of a Customer Number is required.**

2. For printing on the patent front page, list
(1) The names of up to 3 registered patent attorneys or agents OR, alternatively,
(2) The name of a single firm (having as a member a registered attorney or agent) and the names of up to 2 registered patent attorneys or agents. If no name is listed, no name will be printed.

1 Maschoff Brennan
2
3

3. ASSIGNEE NAME AND RESIDENCE DATA TO BE PRINTED ON THE PATENT (print or type)

PLEASE NOTE: Unless an assignee is identified below, no assignee data will appear on the patent. If an assignee is identified below, the document has been filed for recordation as set forth in 37 CFR 3.11. Completion of this form is NOT a substitute for filing an assignment.

(A) NAME OF ASSIGNEE: EMPIRE TECHNOLOGY DEVELOPMENT LLC

(B) RESIDENCE: (CITY and STATE OR COUNTRY): WILMINGTON, DELAWARE

Please check the appropriate assignee category or categories (will not be printed on the patent) : ☐ Individual ☒ Corporation or other private group entity ☐ Government

4a. The following fee(s) are submitted:
- ☒ Issue Fee
- ☒ Publication Fee (No small entity discount permitted)
- ☐ Advance Order - # of Copies _____

4b. Payment of Fee(s): **(Please first reapply any previously paid issue fee shown above)**
- ☐ A check is enclosed.
- ☒ Payment by credit card. Form PTO-2038 is attached.
- ☒ The Director is hereby authorized to charge the required fee(s), any deficiency, or credits any overpayment, to Deposit Account Number 50-5394 (enclose an extra copy of this form).

5. **Change in Entity Status** (from status indicated above)
- ☐ Applicant certifying micro entity status. See 37 CFR 1.29 — NOTE: Absent a valid certification of Micro Entity Status (see forms PTO/SB/15A and 15B), issue fee payment in the micro entity amount will not be accepted at the risk of application abandonment.
- ☐ Applicant asserting small entity status. See 37 CFR 1.27 — NOTE: If the application was previously under micro entity status, checking this box will be taken to be a notification of loss of entitlement to micro entity status.
- ☐ Applicant changing to regular undiscounted fee status. — NOTE: Checking this box will be taken to be a notification of loss of entitlement to small or micro entity status, as applicable.

NOTE: This form must be signed in accordance with 37 CFR 1.31 and 1.33. See 37 CFR 1.4 for signature requirements and certifications.

Authorized Signature /R. Burns Israelsen/ Reg.#42,685 Date October 8, 2014

Typed or printed name R. Burns Israelsen Registration No. 42,685

PTOL-85 Part B (10-13) Approved for use through 10/31/2013. OMB 0651-0033 U.S. Patent and Trademark Office; U.S. DEPARTMENT OF COMMERCE

IN THE UNITED STATES PATENT AND TRADEMARK OFFICE

In re application of	Xuefeng YIN	
Application No.:	13/522,422	Art Unit 2473
Filed:	July 16, 2012	
Conf. No.:	1084	
For:	USER-FOCUSING TECHNIQUE FOR WIRELESS COMMUNICATION SYSTEMS	
Examiner:	Adam K. DUDA	
Customer No.:	97149	
Attorney Docket No.:	I1013.10038US01	

COMMENTS ON STATEMENT OF REASONS FOR ALLOWANCE

Mail Stop ISSUE FEE
Commissioner for Patents
P.O. Box 1450
Alexandria, VA 22313-1450

Dear Sir:

Applicant acknowledges Examiner's statements of Reasons for Allowance of the above-referenced patent application and agrees that the claimed subject matter is patentable. However, Applicant takes no position regarding the Reasons for Allowance presented by the Examiner other than the positions Applicant may have previously taken during prosecution. Therefore, the Examiner's Reasons for Allowance should not be attributed to Applicant as an indication of the basis for Applicant's belief that the claims are patentable. Furthermore, Applicant respectfully asserts that there may also be additional reasons for patentability of the claimed subject matter not explicitly stated in this record and Applicant does not waive its rights to such arguments by not further addressing such reasons herein.

Dated this 8th day of October, 2014.

Respectfully submitted,

/R. Burns Israelsen/ Reg.#42,685

Registration No. 42,685
Attorney for Applicant
Customer No. 97149
Telephone No. (435) 252-1360

IN THE UNITED STATES PATENT AND TRADEMARK OFFICE

In re application of	Xuefeng YIN	
Application No.:	13/522,422	Art Unit 2473
Filed:	July 16, 2012	
Conf. No.:	1084	
For:	USER-FOCUSING TECHNIQUE FOR WIRELESS COMMUNICATION SYSTEMS	
Examiner:	Adam K. DUDA	
Customer No.:	97149	
Attorney Docket No.:	I1013.10038US01	

AMENDMENT UNDER 37 C.F.R. §1.312

Mail Stop ISSUE FEE
Commissioner for Patents
P.O. Box 1450
Alexandria, VA 22313-1450

Dear Sir:

In response to the Notice of Allowance mailed July 8, 2014, please amend the above-identified application as follows:

Amendments to the Specification begin on page 2 of this paper. **Amendments to the Claims** are reflected in the listing of claims which begins on page 5 of this paper. **Amendments to the Drawings** begin on page 12 of this paper and include both an attached replacement sheet and an annotated sheet showing changes. **Remarks** begin on page 13 of this paper.

AMENDMENTS TO THE SPECIFICATION

Please replace paragraph [022] with the following amended paragraph:

Figure 2 illustrates two block diagram illustrating exemplary components of the transmitter 110 and the receiver 150 although the transmitter 110 and receiver 150 may include other components or omit any non-essential components without varying from the scope and meaning of the claims recited below. In this example, the receiver comprises a mobile station which includes a computing unit 200 which is capable of controlling the function of the other modules 200-250 of the mobile station, a display 210 capable of displaying [[on]] one or more images on the mobile station, a speaker 220 including an electroacoustic transducer that produces sound in response to an electrical audio signal input, an antenna array 230 including one or more antennas which are used to send and receive signals with the transmitter 110, a user interface 240 which enables a user of the mobile station to manipulate and interact with the processes of the computing unit 200 so as to control the various modules 200-250 of the mobile station, and a microphone 250 configured to capture an acoustic sound and convert it into an electronic signal using an acoustic-to-electric transducer or sensor.

Please replace paragraph [025] with the following amended paragraph:

Depending on the desired configuration, processor 304 may be of any type including but not limited to a microprocessor (μP), a microcontroller (μC), a digital signal processor (DSP), or any combination thereof. Processor 304 may include one or more levels of caching, such as a level one cache 310 and a level two cache 312, a processor core 314, and registers 316. An example processor core 314 may include an arithmetic logic unit (ALU), a floating point unit (FPU), a digital signal processing core (DSP Core), or any combination thereof. An example memory controller 318 may also be used with processor 304, or in some implementations memory controller 318 may be an internal part of processor 304.

Please replace paragraph [029] with the following amended paragraph:

Computing device 300 may also include an interface bus 340 for facilitating communication from various interface devices (e.g., output devices 342, peripheral interfaces 344, and communication devices 346) to basic configuration 302 via bus/interface controller 330. Example output devices 342 include a graphics processing unit 348 and an audio processing unit

[[360]]350, which may be configured to communicate to various external devices such as a display or speakers via one or more A/V ports [[362]]352. Example peripheral interfaces 344 include a serial interface controller [[364]]354 or a parallel interface controller [[366]]356, which may be configured to communicate with external devices such as input devices (e.g., keyboard, mouse, pen, voice input device, touch input device, etc.) or other peripheral devices (e.g., printer, scanner, etc.) via one or more I/O ports [[368]]358. An example communication device 346 includes a network controller 360, which may be arranged to facilitate communications with one or more other computing devices 362 over a network communication link via one or more communication ports 364.

Please replace paragraph [062] with the following amended paragraph:

Figure 5A depicts the modification that can be implemented in the conventional communication system when the user-focusing technique is applied. In the conventional configuration, the transmitter 500 includes modulation blocks 510, a RF front end 520 and antennas 505a and 505b. The receiver 550 includes a RF front end 530 a channel estimation module 535, antennas 545a and 545b and a channel equalization module 540.

Please replace paragraph [068] with the following amended paragraph:

As such, it is possible to use both equalization technique and ~~pre-distorted~~ pre-distortion technique at in the same system. As explained before, the equalization technique is used in the receiver 150, while the pre-distortion is applied in the transmitter 110. When the pre-distorted technique is used, the complexity of the equalization may be significantly reduced in the receiver 150.

Please replace paragraph [069] with the following amended paragraph:

For example, in an instance where the receiver 150 is moving at the speed of 350km/h, the channel equalization block 540 of the receiver, such as the GSM terminals, is normally only able to support the communication when the moving speed is up to 200km/h. So when the user terminal moves beyond 200km/h, the communications become highly unstable. In order to maintain communication without significantly modifying the receiver 150, the user-focusing technique described herein may be implemented in the transmitter 110 by pre-distorting the signals in such a way that the signal received in the receiver 150 is similar with those observed

when the user equipment moves at the speed below 200km/h. So in this example, the equalization and pre-distortion techniques may be jointly used. Thus, the ability to distribute the complexity of coping channels in harsh conditions is increased.

Please replace paragraph [073] with the following amended paragraph:

The smart antenna of the SDMA (spatial division multiplexing ~~address~~ access) technique can make use of SDMA technique to direct the beam to the certain directions. However, in SDMA, there is no concept of pre-distortion of the signals in time, frequency and space domains, as described above. Furthermore, embodiments described herein require that the propagation paths be differentiable in the directions, and also in the delay, Doppler frequency. By conducting the pre-distortion in time, frequency and space jointly, the method described above is able to create a focus of the signal following a moving point in an environment with multi-path richness.

AMENDMENTS TO THE CLAIMS

This listing of claims replaces all prior versions and listings of claims in the application:

1. **(Previously Presented)** A method for wireless communication in a system including a transmitter, a receiver, and a plurality of propagation paths formed between the transmitter and the receiver which are capable of carrying a signal transmitted by the transmitter to the receiver, the method comprising:

transmitting a first signal from the transmitter to the receiver via a first propagation path of the plurality of propagation paths;

receiving the first signal at the receiver;

performing a channel estimation based on the first signal to obtain path parameter information of the first propagation path;

sending the channel estimation that includes the path parameter information from the receiver to the transmitter via the first propagation path;

predistorting a second signal at the transmitter in a time domain, a frequency domain, and a spatial domain, according to the channel estimation based on the first signal;

transmitting the predistorted second signal from the transmitter to the receiver via the first propagation path; and

receiving the predistorted second signal at the receiver.

2. **(Previously Presented)** The method of claim 1, wherein the path parameter information of the first propagation path includes at least one of an estimation of a delay, an estimation of a Doppler frequency, an estimation of a direction of arrival, an estimation of a direction of departure, and an estimation of a complex amplitude of the first propagation path.

3. **(Previously Presented)** The method of claim 2, wherein the path parameter information of the first propagation path further includes an estimation of a polarization status of the first propagation path.

4. **(Previously Presented)** The method of claim 1, wherein the path parameter information is obtained by at least one estimation technique of the group consisting of a maximum-likelihood estimation algorithm, periodogram, correlatorgram, spectral-based

methods, Bartlett beamformers, Capon beamformers, subspace–based techniques, MUSIC (MUltiple SIgnal Classification), ESPRIT (Estimation of Signal Parameters via Rotational Invariance Techniques), approximation of the maximum-likelihood method based on iterative schemes, SAGE (Space-Alternating Generalized Expectation-maximization), RiMAX (Richter's Maximum Likelihood method), maximum-a-posteriori based methods, Evidence Framework, Bayesian techniques, tracking algorithms, Kalman filtering techniques, enhanced Kalman filtering techniques, particle filtering techniques, and least-square-error methods.

5. **(Cancelled)**

6. **(Cancelled)**

7. **(Previously Presented)** The method of claim 1, the method further comprising:

performing a system response estimation of the first signal to obtain parameter information of the system;

sending the system response estimation from the receiver to the transmitter via the first propagation path; and

further predistorting the predistorted second signal at the transmitter according to the system response estimation.

8. **(Previously Presented)** The method of claim 1, further comprising equalizing the predistorted second signal at the receiver.

9. **(Previously Presented)** The method of claim 8, wherein equalizing the predistorted second signal is performed using a joint processing technique in a coordinated multiple-point (CoMP) system.

10. **(Cancelled)**

11. **(Cancelled)**

12. **(Currently Amended)** A system for wireless communication comprising:

a receiver;

a transmitter; and

a plurality of propagation paths formed between the transmitter and the receiver which are capable of carrying a signal transmitted by the transmitter to the receiver,

wherein the receiver is configured to receive a first signal that is transmitted along a first propagation path of the plurality of propagation paths from the transmitter, perform a channel estimation based on the first signal to obtain path parameter information of the first propagation path, and send the channel estimation that includes the path parameter information to the transmitter via the first propagation path, and

wherein the transmitter is configured to predistort a second signal in a time domain, a frequency domain, and a spatial domain according to the channel estimation that is based on the first signal and received from the receiver and <u>to</u> transmit the predistorted second signal to the receiver via the first propagation path.

13. **(Previously Presented)** The system of claim 12, wherein the path parameter information of the first propagation path includes at least one of an estimation of a delay, an estimation of a Doppler frequency, an estimation of a direction of arrival, an estimation of a direction of departure, and an estimation of a complex amplitude of the first propagation path.

14. **(Previously Presented)** The system of claim 12, wherein the path parameter information of the first propagation path further includes an estimation of a polarization status of the first propagation path.

15. **(Previously Presented)** The system of claim 12, wherein the path parameter information is obtained by at least one estimation technique of the group consisting of a maximum likelihood estimation algorithm, periodogram, correlatorgram, spectral-based methods, Bartlett beamformers, Capon beamformers, subspace–based techniques, MUSIC (MUltiple SIgnal Classification), ESPRIT (Estimation of Signal Parameters via Rotational Invariance Techniques), approximation of the maximum-likelihood method based on iterative schemes, SAGE (Space-Alternating Generalized Expectation-maximization), RiMAX (Richter's

Maximum Likelihood method), maximum-a-posteriori based methods, Evidence Framework, Bayesian techniques, tracking algorithms, Kalman filtering techniques, enhanced Kalman filtering techniques, particle filtering techniques, and least-square-error methods.

16. **(Previously Presented)** The system of claim 12, wherein the transmitter and the receiver each comprise multiple antennas in a multiple-input and multiple-output (MIMO) wireless communication system or a single antenna in a single-input and single-output (SISO) wireless communication system.

17. **(Cancelled)**

18. **(Currently Amended)** The system of claim 12, wherein the receiver is further configured to perform a system response estimation of the first signal to obtain parameter information of the system and <u>to</u> send the system response estimation from the receiver to the transmitter via the first propagation path, ~~and~~

wherein the transmitter is further configured to further predistort the predistorted second signal according to the system response estimation.

19. **(Previously Presented)** The system of claim 12, wherein the receiver is further configured to equalize the predistorted second signal.

20. **(Cancelled)**

21. **(Currently Amended)** A base station for performing wireless communication with a receiver in a wireless device via a plurality of propagation paths, the base station comprising:

a transmitter;

a computing device; and

a computer-readable storage medium having computer-executable instructions stored thereon that are executable by the computing device to perform operations comprising:

transmitting a first signal from the transmitter to the receiver via a first propagation path of the plurality of propagation paths;

receiving a channel estimation based on the first signal, the channel estimation including path parameter information of the first propagation path;

predistorting a second signal in a time domain, a frequency domain, and a spatial domain according to the channel estimation based on the first signal; and

transmitting the predistorted second signal from the transmitter to the receiver via the first propagation path.

22. **(Previously Presented)** The base station of claim 21, wherein the path parameter information of the first propagation path includes at least one of an estimation of a delay, an estimation of a Doppler frequency, an estimation of a direction of arrival, an estimation of a direction of departure, an estimation of a complex amplitude of the first propagation path, and an estimation of a polarization status of the first propagation path.

23. **(Cancelled)**

24. **(Cancelled)**

25. **(Previously Presented)** The base station of claim 21, wherein the transmitter comprises multiple antennas in a multiple-input and multiple-output (MIMO) wireless communication system or a single antenna in a single-input and single-output (SISO) wireless communication system.

26. **(Cancelled)**

27. **(Currently Amended)** The base station of claim 21, wherein ~~the computer-executable instructions stored that are executable by~~ the computing device performs further operations comprising:

receiving a system response estimation of the first signal that contains parameter information of the base station, the wireless device, and of the first propagation path; and

further predistorting the predistorted second signal according to the system response estimation.

28. **(Previously Presented)** A wireless device for performing wireless communication with a base station with a transmitter via a plurality of propagation paths, the wireless device comprising:

a receiver;

a computing device; and

a computer-readable storage medium having computer-executable instructions stored thereon that are executable by the computing device to perform operations comprising:

receiving a first signal at the receiver via a first propagation path of the plurality of propagation paths;

performing a channel estimation based on the first signal to obtain path parameter information of the first propagation path;

sending the channel estimation that includes the path parameter information to the transmitter; and

receiving a second signal via the first propagation path, the second signal predistorted in a time domain, a frequency domain, and a spatial domain according to the channel estimation based on the first signal.

29. **(Previously Presented)** The wireless device of claim 28, wherein the path parameter information of the first propagation path includes at least one of an estimation of a delay, an estimation of a Doppler frequency, an estimation of a direction of arrival, an estimation of a direction of departure, and an estimation of a complex amplitude of the first propagation path.

30. **(Previously Presented)** The wireless device of claim 29, wherein the path parameter information of the first propagation path further includes an estimation of a polarization status of the first propagation path.

31. **(Previously Presented)** The wireless device of claim 28, wherein the path parameter information is obtained by at least one estimation technique of the group consisting of a maximum likelihood estimation algorithm, periodogram, correlatorgram, spectral-based methods, Bartlett beamformers, Capon beamformers, subspace–based techniques, MUSIC (MUltiple SIgnal Classification), ESPRIT (Estimation of Signal Parameters via Rotational Invariance Techniques), approximation of the maximum-likelihood method based on iterative schemes, SAGE (Space-Alternating Generalized Expectation-maximization), RiMAX (Richter's Maximum Likelihood method), maximum-a-posteriori based methods, Evidence Framework, Bayesian techniques, tracking algorithms, Kalman filtering techniques, enhanced Kalman filtering techniques, particle filtering techniques, and least-square-error methods.

32. **(Previously Presented)** The wireless device of claim 28, wherein the receiver comprises multiple antennas in a multiple-input and multiple-output (MIMO) wireless communication system or a single antenna in a single-input and single-output (SISO) wireless communication system.

33. **(Currently Amended)** The wireless device of claim 28, wherein ~~the computer-executable instructions stored that are executable by~~ the computing device performs further operations comprising ~~comprise~~:

receiving a third signal along another of the plurality of propagation paths, the third signal being phase aligned with the second signal when received by the receiver such that no equalization of the second and third signals is performed by the wireless device.

34. **(Currently Amended)** The wireless device of claim 28, wherein ~~the computer-executable instructions stored that are executable by~~ the computing device performs further operations comprising ~~comprise~~:

generating a system response estimation of the first signal that contains parameter information of the base station, the wireless device, and of the first propagation path; and

receiving the second signal predistorted based on the system response estimation.

AMENDMENTS TO THE DRAWINGS

The accompanying replacement sheet of drawings includes changes to Figure 3 and replaces the original sheet. The changes to Figure 3 include minor changes to reference numbers and labels. The marked-up version of the drawing reproduced below identifies (within the circles) the portions that have been changed.

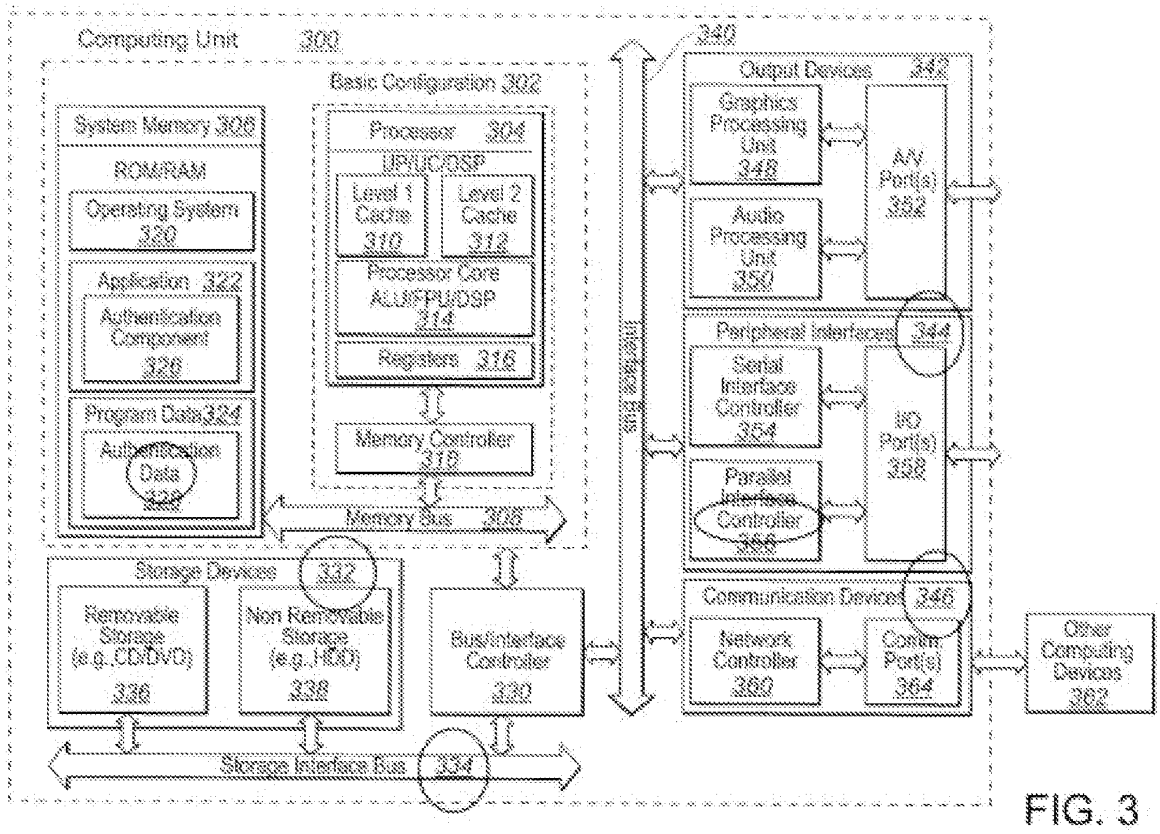

FIG. 3

REMARKS

The amendments to the specification, claims and drawings of this allowed application embody the correction of formal matters without changing the scope of the claims. Thus, the Applicant respectfully requests entry of the changes to the specification, claims and drawings before the issuance and publication of the patent. In the event that Examiner finds remaining impediment to the entry of this amendment, the Examiner is requested to contact the undersigned attorney.

Dated this 8th day of October, 2014.

Respectfully submitted,

/R. Burns Israelsen/ Reg.#42,685

R. BURNS ISRAELSEN
Registration No. 42,685
Attorney for Applicant
Telephone No. (435) 252-1360

Electronic Patent Application Fee Transmittal

Application Number:	13522422
Filing Date:	16-Jul-2012
Title of Invention:	USER-FOCUSING TECHNIQUE FOR WIRELESS COMMUNICATION SYSTEMS
First Named Inventor/Applicant Name:	Xuefeng Yin
Filer:	Robert Burns Israelsen/Tauna Kellogg
Attorney Docket Number:	I1013.10038US01

Filed as Large Entity

U.S. National Stage under 35 USC 371 Filing Fees

Description	Fee Code	Quantity	Amount	Sub-Total in USD($)
Basic Filing:				
Pages:				
Claims:				
Miscellaneous-Filing:				
Petition:				
Patent-Appeals-and-Interference:				
Post-Allowance-and-Post-Issuance:				
Utility Appl Issue Fee	1501	1	960	960
Extension-of-Time:				

Description	Fee Code	Quantity	Amount	Sub-Total in USD($)
Miscellaneous:				
			Total in USD ($)	**960**

Electronic Acknowledgement Receipt

EFS ID:	20341714
Application Number:	13522422
International Application Number:	
Confirmation Number:	1084
Title of Invention:	USER-FOCUSING TECHNIQUE FOR WIRELESS COMMUNICATION SYSTEMS
First Named Inventor/Applicant Name:	Xuefeng Yin
Customer Number:	97149
Filer:	Robert Burns Israelsen/Tauna Kellogg
Filer Authorized By:	Robert Burns Israelsen
Attorney Docket Number:	I1013.10038US01
Receipt Date:	08-OCT-2014
Filing Date:	16-JUL-2012
Time Stamp:	14:02:52
Application Type:	U.S. National Stage under 35 USC 371

Payment information:

Submitted with Payment	yes
Payment Type	Credit Card
Payment was successfully received in RAM	$960
RAM confirmation Number	288
Deposit Account	
Authorized User	

File Listing:

Document Number	Document Description	File Name	File Size(Bytes)/ Message Digest	Multi Part /.zip	Pages (if appl.)

1	Drawings-only black and white line drawings	I1013-10038US01-Replacement_Drawings.pdf	119377 6baccc808851311a634051a342ef6e9df32e3939	no	1
Warnings:					
Information:					
2	Issue Fee Payment (PTO-85B)	I1013-10038US01-Issue_Fee_Transmittal.pdf	259788 1779f146862301fcf0f965958ed6a6bfb2897c6e	no	1
Warnings:					
Information:					
3	Miscellaneous Incoming Letter	I1013-10038US01-Statement_of_Allowance.pdf	157550 87b358f2dc322c1e1a179019781a7248a3341b58	no	1
Warnings:					
Information:					
4		I1013-10038US0312Amend.pdf	330048 a08a3d8c7838ae0c4edba22a976819bcaae79585	yes	13

Multipart Description/PDF files in .zip description

Document Description	Start	End
Amendment after Notice of Allowance (Rule 312)	1	1
Specification	2	4
Claims	5	11
Drawings-only black and white line drawings	12	12
Applicant Arguments/Remarks Made in an Amendment	13	13

Warnings:					
Information:					
5	Fee Worksheet (SB06)	fee-info.pdf	30686 d4b11a011986e1afa6c3f27a700d9cfb61d5188b	no	2
Warnings:					
Information:					
		Total Files Size (in bytes):	897449		

This Acknowledgement Receipt evidences receipt on the noted date by the USPTO of the indicated documents, characterized by the applicant, and including page counts, where applicable. It serves as evidence of receipt similar to a Post Card, as described in MPEP 503.

New Applications Under 35 U.S.C. 111
If a new application is being filed and the application includes the necessary components for a filing date (see 37 CFR 1.53(b)-(d) and MPEP 506), a Filing Receipt (37 CFR 1.54) will be issued in due course and the date shown on this Acknowledgement Receipt will establish the filing date of the application.

National Stage of an International Application under 35 U.S.C. 371
If a timely submission to enter the national stage of an international application is compliant with the conditions of 35 U.S.C. 371 and other applicable requirements a Form PCT/DO/EO/903 indicating acceptance of the application as a national stage submission under 35 U.S.C. 371 will be issued in addition to the Filing Receipt, in due course.

New International Application Filed with the USPTO as a Receiving Office
If a new international application is being filed and the international application includes the necessary components for an international filing date (see PCT Article 11 and MPEP 1810), a Notification of the International Application Number and of the International Filing Date (Form PCT/RO/105) will be issued in due course, subject to prescriptions concerning national security, and the date shown on this Acknowledgement Receipt will establish the international filing date of the application.

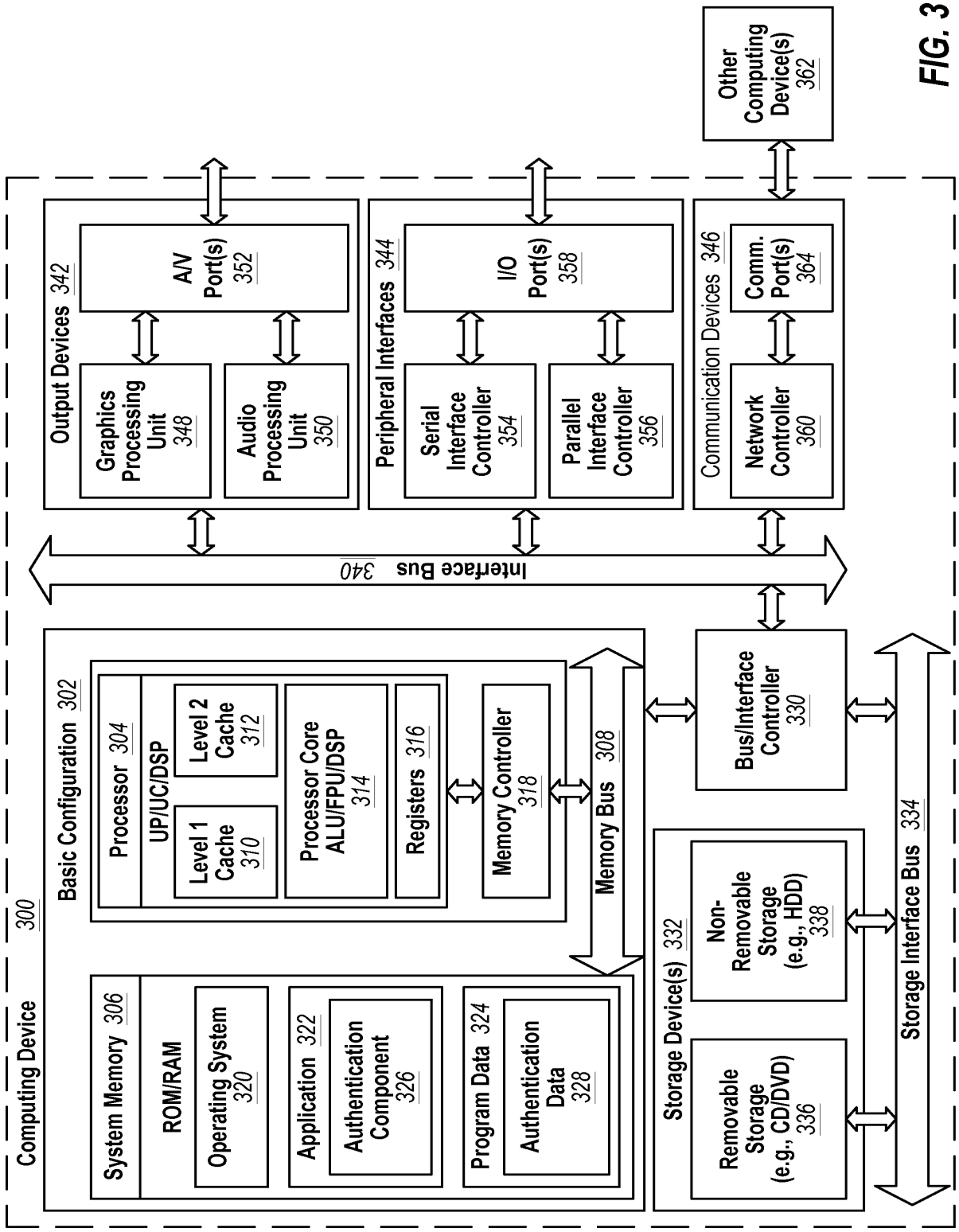
Computing Device 300
Basic Configuration 302
Processor 304
UP/UC/DSP
Level 1 Cache 310
Level 2 Cache 312
Processor Core ALU/FPU/DSP 314
Registers 316
Memory Controller 318
Memory Bus 308
System Memory 306
ROM/RAM
Operating System 320
Application 322
Authentication Component 326
Program Data 324
Authentication Data 328
Output Devices 342
Graphics Processing Unit 348
A/V Port(s) 352
Audio Processing Unit 350
Peripheral Interfaces 344
Serial Interface Controller 354
I/O Port(s) 358
Parallel Interface Controller 356
Communication Devices 346
Network Controller 360
Comm. Port(s) 364
Other Computing Device(s) 362
Interface Bus 340
Bus/Interface Controller 330
Storage Device(s) 332
Removable Storage (e.g., CD/DVD) 336
Non-Removable Storage (e.g., HDD) 338
Storage Interface Bus 334

FIG. 3

UNITED STATES PATENT AND TRADEMARK OFFICE

UNITED STATES DEPARTMENT OF COMMERCE
United States Patent and Trademark Office
Address: COMMISSIONER FOR PATENTS
P.O. Box 1450
Alexandria, Virginia 22313-1450
www.uspto.gov

NOTICE OF ALLOWANCE AND FEE(S) DUE

97149 7590 07/08/2014
Maschoff Brennan
1389 Center Drive, Suite 300
Park City, UT 84098

EXAMINER
DUDA, ADAM K

ART UNIT	PAPER NUMBER
2473	

DATE MAILED: 07/08/2014

APPLICATION NO.	FILING DATE	FIRST NAMED INVENTOR	ATTORNEY DOCKET NO.	CONFIRMATION NO.
13/522,422	07/16/2012	Xuefeng Yin	I1013.10038US01	1084

TITLE OF INVENTION: USER-FOCUSING TECHNIQUE FOR WIRELESS COMMUNICATION SYSTEMS

APPLN. TYPE	ENTITY STATUS	ISSUE FEE DUE	PUBLICATION FEE DUE	PREV. PAID ISSUE FEE	TOTAL FEE(S) DUE	DATE DUE
nonprovisional	UNDISCOUNTED	$960	$0	$0	$960	10/08/2014

THE APPLICATION IDENTIFIED ABOVE HAS BEEN EXAMINED AND IS ALLOWED FOR ISSUANCE AS A PATENT. PROSECUTION ON THE MERITS IS CLOSED. THIS NOTICE OF ALLOWANCE IS NOT A GRANT OF PATENT RIGHTS. THIS APPLICATION IS SUBJECT TO WITHDRAWAL FROM ISSUE AT THE INITIATIVE OF THE OFFICE OR UPON PETITION BY THE APPLICANT. SEE 37 CFR 1.313 AND MPEP 1308.

THE ISSUE FEE AND PUBLICATION FEE (IF REQUIRED) MUST BE PAID WITHIN THREE MONTHS FROM THE MAILING DATE OF THIS NOTICE OR THIS APPLICATION SHALL BE REGARDED AS ABANDONED. THIS STATUTORY PERIOD CANNOT BE EXTENDED. SEE 35 U.S.C. 151. THE ISSUE FEE DUE INDICATED ABOVE DOES NOT REFLECT A CREDIT FOR ANY PREVIOUSLY PAID ISSUE FEE IN THIS APPLICATION. IF AN ISSUE FEE HAS PREVIOUSLY BEEN PAID IN THIS APPLICATION (AS SHOWN ABOVE), THE RETURN OF PART B OF THIS FORM WILL BE CONSIDERED A REQUEST TO REAPPLY THE PREVIOUSLY PAID ISSUE FEE TOWARD THE ISSUE FEE NOW DUE.

HOW TO REPLY TO THIS NOTICE:

I. Review the ENTITY STATUS shown above. If the ENTITY STATUS is shown as SMALL or MICRO, verify whether entitlement to that entity status still applies.

If the ENTITY STATUS is the same as shown above, pay the TOTAL FEE(S) DUE shown above.

If the ENTITY STATUS is changed from that shown above, on PART B - FEE(S) TRANSMITTAL, complete section number 5 titled "Change in Entity Status (from status indicated above)".

For purposes of this notice, small entity fees are 1/2 the amount of undiscounted fees, and micro entity fees are 1/2 the amount of small entity fees.

II. PART B - FEE(S) TRANSMITTAL, or its equivalent, must be completed and returned to the United States Patent and Trademark Office (USPTO) with your ISSUE FEE and PUBLICATION FEE (if required). If you are charging the fee(s) to your deposit account, section "4b" of Part B - Fee(s) Transmittal should be completed and an extra copy of the form should be submitted. If an equivalent of Part B is filed, a request to reapply a previously paid issue fee must be clearly made, and delays in processing may occur due to the difficulty in recognizing the paper as an equivalent of Part B.

III. All communications regarding this application must give the application number. Please direct all communications prior to issuance to Mail Stop ISSUE FEE unless advised to the contrary.

IMPORTANT REMINDER: Utility patents issuing on applications filed on or after Dec. 12, 1980 may require payment of maintenance fees. It is patentee's responsibility to ensure timely payment of maintenance fees when due.

PART B - FEE(S) TRANSMITTAL

Complete and send this form, together with applicable fee(s), to: Mail **Mail Stop ISSUE FEE**
Commissioner for Patents
P.O. Box 1450
Alexandria, Virginia 22313-1450
or Fax (571)-273-2885

INSTRUCTIONS: This form should be used for transmitting the ISSUE FEE and PUBLICATION FEE (if required). Blocks 1 through 5 should be completed where appropriate. All further correspondence including the Patent, advance orders and notification of maintenance fees will be mailed to the current correspondence address as indicated unless corrected below or directed otherwise in Block 1, by (a) specifying a new correspondence address; and/or (b) indicating a separate "FEE ADDRESS" for maintenance fee notifications.

CURRENT CORRESPONDENCE ADDRESS (Note: Use Block 1 for any change of address)

97149 7590 07/08/2014
Maschoff Brennan
1389 Center Drive, Suite 300
Park City, UT 84098

Note: A certificate of mailing can only be used for domestic mailings of the Fee(s) Transmittal. This certificate cannot be used for any other accompanying papers. Each additional paper, such as an assignment or formal drawing, must have its own certificate of mailing or transmission.

Certificate of Mailing or Transmission
I hereby certify that this Fee(s) Transmittal is being deposited with the United States Postal Service with sufficient postage for first class mail in an envelope addressed to the Mail Stop ISSUE FEE address above, or being facsimile transmitted to the USPTO (571) 273-2885, on the date indicated below.

(Depositor's name)
(Signature)
(Date)

APPLICATION NO.	FILING DATE	FIRST NAMED INVENTOR	ATTORNEY DOCKET NO.	CONFIRMATION NO.
13/522,422	07/16/2012	Xuefeng Yin	I1013.10038US01	1084

TITLE OF INVENTION: USER-FOCUSING TECHNIQUE FOR WIRELESS COMMUNICATION SYSTEMS

APPLN. TYPE	ENTITY STATUS	ISSUE FEE DUE	PUBLICATION FEE DUE	PREV. PAID ISSUE FEE	TOTAL FEE(S) DUE	DATE DUE
nonprovisional	UNDISCOUNTED	$960	$0	$0	$960	10/08/2014

EXAMINER	ART UNIT	CLASS-SUBCLASS
DUDA, ADAM K	2473	370-252000

1. Change of correspondence address or indication of "Fee Address" (37 CFR 1.363).
- ❑ Change of correspondence address (or Change of Correspondence Address form PTO/SB/122) attached.
- ❑ "Fee Address" indication (or "Fee Address" Indication form PTO/SB/47; Rev 03-02 or more recent) attached. **Use of a Customer Number is required.**

2. For printing on the patent front page, list
(1) The names of up to 3 registered patent attorneys or agents OR, alternatively,
(2) The name of a single firm (having as a member a registered attorney or agent) and the names of up to 2 registered patent attorneys or agents. If no name is listed, no name will be printed.

1_____
2_____
3_____

3. ASSIGNEE NAME AND RESIDENCE DATA TO BE PRINTED ON THE PATENT (print or type)

PLEASE NOTE: Unless an assignee is identified below, no assignee data will appear on the patent. If an assignee is identified below, the document has been filed for recordation as set forth in 37 CFR 3.11. Completion of this form is NOT a substitute for filing an assignment.

(A) NAME OF ASSIGNEE (B) RESIDENCE: (CITY and STATE OR COUNTRY)

Please check the appropriate assignee category or categories (will not be printed on the patent) : ❑ Individual ❑ Corporation or other private group entity ❑ Government

4a. The following fee(s) are submitted:
- ❑ Issue Fee
- ❑ Publication Fee (No small entity discount permitted)
- ❑ Advance Order - # of Copies _____

4b. Payment of Fee(s): **(Please first reapply any previously paid issue fee shown above)**
- ❑ A check is enclosed.
- ❑ Payment by credit card. Form PTO-2038 is attached.
- ❑ The Director is hereby authorized to charge the required fee(s), any deficiency, or credits any overpayment, to Deposit Account Number _____ (enclose an extra copy of this form).

5. **Change in Entity Status** (from status indicated above)
- ❑ Applicant certifying micro entity status. See 37 CFR 1.29 — NOTE: Absent a valid certification of Micro Entity Status (see forms PTO/SB/15A and 15B), issue fee payment in the micro entity amount will not be accepted at the risk of application abandonment.
- ❑ Applicant asserting small entity status. See 37 CFR 1.27 — NOTE: If the application was previously under micro entity status, checking this box will be taken to be a notification of loss of entitlement to micro entity status.
- ❑ Applicant changing to regular undiscounted fee status. — NOTE: Checking this box will be taken to be a notification of loss of entitlement to small or micro entity status, as applicable.

NOTE: This form must be signed in accordance with 37 CFR 1.31 and 1.33. See 37 CFR 1.4 for signature requirements and certifications.

Authorized Signature _____ Date _____

Typed or printed name _____ Registration No. _____

UNITED STATES PATENT AND TRADEMARK OFFICE

UNITED STATES DEPARTMENT OF COMMERCE
United States Patent and Trademark Office
Address: COMMISSIONER FOR PATENTS
P.O. Box 1450
Alexandria, Virginia 22313-1450
www.uspto.gov

APPLICATION NO.	FILING DATE	FIRST NAMED INVENTOR	ATTORNEY DOCKET NO.	CONFIRMATION NO.
13/522,422	07/16/2012	Xuefeng Yin	I1013.10038US01	1084

97149 7590 07/08/2014
Maschoff Brennan
1389 Center Drive, Suite 300
Park City, UT 84098

EXAMINER
DUDA, ADAM K

ART UNIT	PAPER NUMBER
2473	

DATE MAILED: 07/08/2014

Determination of Patent Term Adjustment under 35 U.S.C. 154 (b)
(Applications filed on or after May 29, 2000)

The Office has discontinued providing a Patent Term Adjustment (PTA) calculation with the Notice of Allowance.

Section 1(h)(2) of the AIA Technical Corrections Act amended 35 U.S.C. 154(b)(3)(B)(i) to eliminate the requirement that the Office provide a patent term adjustment determination with the notice of allowance. See Revisions to Patent Term Adjustment, 78 Fed. Reg. 19416, 19417 (Apr. 1, 2013). Therefore, the Office is no longer providing an initial patent term adjustment determination with the notice of allowance. The Office will continue to provide a patent term adjustment determination with the Issue Notification Letter that is mailed to applicant approximately three weeks prior to the issue date of the patent, and will include the patent term adjustment on the patent. Any request for reconsideration of the patent term adjustment determination (or reinstatement of patent term adjustment) should follow the process outlined in 37 CFR 1.705.

Any questions regarding the Patent Term Extension or Adjustment determination should be directed to the Office of Patent Legal Administration at (571)-272-7702. Questions relating to issue and publication fee payments should be directed to the Customer Service Center of the Office of Patent Publication at 1-(888)-786-0101 or (571)-272-4200.

OMB Clearance and PRA Burden Statement for PTOL-85 Part B

The Paperwork Reduction Act (PRA) of 1995 requires Federal agencies to obtain Office of Management and Budget approval before requesting most types of information from the public. When OMB approves an agency request to collect information from the public, OMB (i) provides a valid OMB Control Number and expiration date for the agency to display on the instrument that will be used to collect the information and (ii) requires the agency to inform the public about the OMB Control Number's legal significance in accordance with 5 CFR 1320.5(b).

The information collected by PTOL-85 Part B is required by 37 CFR 1.311. The information is required to obtain or retain a benefit by the public which is to file (and by the USPTO to process) an application. Confidentiality is governed by 35 U.S.C. 122 and 37 CFR 1.14. This collection is estimated to take 12 minutes to complete, including gathering, preparing, and submitting the completed application form to the USPTO. Time will vary depending upon the individual case. Any comments on the amount of time you require to complete this form and/or suggestions for reducing this burden, should be sent to the Chief Information Officer, U.S. Patent and Trademark Office, U.S. Department of Commerce, P.O. Box 1450, Alexandria, Virginia 22313-1450. DO NOT SEND FEES OR COMPLETED FORMS TO THIS ADDRESS. SEND TO: Commissioner for Patents, P.O. Box 1450, Alexandria, Virginia 22313-1450. Under the Paperwork Reduction Act of 1995, no persons are required to respond to a collection of information unless it displays a valid OMB control number.

Privacy Act Statement

The Privacy Act of 1974 (P.L. 93-579) requires that you be given certain information in connection with your submission of the attached form related to a patent application or patent. Accordingly, pursuant to the requirements of the Act, please be advised that: (1) the general authority for the collection of this information is 35 U.S.C. 2(b)(2); (2) furnishing of the information solicited is voluntary; and (3) the principal purpose for which the information is used by the U.S. Patent and Trademark Office is to process and/or examine your submission related to a patent application or patent. If you do not furnish the requested information, the U.S. Patent and Trademark Office may not be able to process and/or examine your submission, which may result in termination of proceedings or abandonment of the application or expiration of the patent.

The information provided by you in this form will be subject to the following routine uses:

1. The information on this form will be treated confidentially to the extent allowed under the Freedom of Information Act (5 U.S.C. 552) and the Privacy Act (5 U.S.C 552a). Records from this system of records may be disclosed to the Department of Justice to determine whether disclosure of these records is required by the Freedom of Information Act.
2. A record from this system of records may be disclosed, as a routine use, in the course of presenting evidence to a court, magistrate, or administrative tribunal, including disclosures to opposing counsel in the course of settlement negotiations.
3. A record in this system of records may be disclosed, as a routine use, to a Member of Congress submitting a request involving an individual, to whom the record pertains, when the individual has requested assistance from the Member with respect to the subject matter of the record.
4. A record in this system of records may be disclosed, as a routine use, to a contractor of the Agency having need for the information in order to perform a contract. Recipients of information shall be required to comply with the requirements of the Privacy Act of 1974, as amended, pursuant to 5 U.S.C. 552a(m).
5. A record related to an International Application filed under the Patent Cooperation Treaty in this system of records may be disclosed, as a routine use, to the International Bureau of the World Intellectual Property Organization, pursuant to the Patent Cooperation Treaty.
6. A record in this system of records may be disclosed, as a routine use, to another federal agency for purposes of National Security review (35 U.S.C. 181) and for review pursuant to the Atomic Energy Act (42 U.S.C. 218(c)).
7. A record from this system of records may be disclosed, as a routine use, to the Administrator, General Services, or his/her designee, during an inspection of records conducted by GSA as part of that agency's responsibility to recommend improvements in records management practices and programs, under authority of 44 U.S.C. 2904 and 2906. Such disclosure shall be made in accordance with the GSA regulations governing inspection of records for this purpose, and any other relevant (i.e., GSA or Commerce) directive. Such disclosure shall not be used to make determinations about individuals.
8. A record from this system of records may be disclosed, as a routine use, to the public after either publication of the application pursuant to 35 U.S.C. 122(b) or issuance of a patent pursuant to 35 U.S.C. 151. Further, a record may be disclosed, subject to the limitations of 37 CFR 1.14, as a routine use, to the public if the record was filed in an application which became abandoned or in which the proceedings were terminated and which application is referenced by either a published application, an application open to public inspection or an issued patent.
9. A record from this system of records may be disclosed, as a routine use, to a Federal, State, or local law enforcement agency, if the USPTO becomes aware of a violation or potential violation of law or regulation.

Notice of Allowability	Application No. 13/522,422	Applicant(s) YIN, XUEFENG	
	Examiner ADAM DUDA	Art Unit 2473	AIA (First Inventor to File) Status No

-- The MAILING DATE of this communication appears on the cover sheet with the correspondence address--

All claims being allowable, PROSECUTION ON THE MERITS IS (OR REMAINS) CLOSED in this application. If not included herewith (or previously mailed), a Notice of Allowance (PTOL-85) or other appropriate communication will be mailed in due course. **THIS NOTICE OF ALLOWABILITY IS NOT A GRANT OF PATENT RIGHTS.** This application is subject to withdrawal from issue at the initiative of the Office or upon petition by the applicant. See 37 CFR 1.313 and MPEP 1308.

1. ☒ This communication is responsive to *REMARKS mailed 6/11/2014*.
   ☐ A declaration(s)/affidavit(s) under **37 CFR 1.130(b)** was/were filed on_____.

2. ☐ An election was made by the applicant in response to a restriction requirement set forth during the interview on _____; the restriction requirement and election have been incorporated into this action.

3. ☒ The allowed claim(s) is/are *1-4, 7-9, 12, -16, 18-19, 21-22, 25, and 27-34*. As a result of the allowed claim(s), you may be eligible to benefit from the **Patent Prosecution Highway** program at a participating intellectual property office for the corresponding application. For more information, please see http://www.uspto.gov/patents/init_events/pph/index.jsp or send an inquiry to PPHfeedback@uspto.gov .

4. ☒ Acknowledgment is made of a claim for foreign priority under 35 U.S.C. § 119(a)-(d) or (f).

   Certified copies:

   a) ☐ All b) ☐ Some *c) ☒ None of the:

   1. ☐ Certified copies of the priority documents have been received.
   2. ☐ Certified copies of the priority documents have been received in Application No. _____ .
   3. ☒ Copies of the certified copies of the priority documents have been received in this national stage application from the International Bureau (PCT Rule 17.2(a)).

   * Certified copies not received: _____.

Applicant has THREE MONTHS FROM THE "MAILING DATE" of this communication to file a reply complying with the requirements noted below. Failure to timely comply will result in ABANDONMENT of this application.
THIS THREE-MONTH PERIOD IS NOT EXTENDABLE.

5. ☐ CORRECTED DRAWINGS (as "replacement sheets") must be submitted.

   ☐ including changes required by the attached Examiner's Amendment / Comment or in the Office action of Paper No./Mail Date _____.

   Identifying indicia such as the application number (see 37 CFR 1.84(c)) should be written on the drawings in the front (not the back) of each sheet. Replacement sheet(s) should be labeled as such in the header according to 37 CFR 1.121(d).

6. ☐ DEPOSIT OF and/or INFORMATION about the deposit of BIOLOGICAL MATERIAL must be submitted. Note the attached Examiner's comment regarding REQUIREMENT FOR THE DEPOSIT OF BIOLOGICAL MATERIAL.

Attachment(s)

1. ☐ Notice of References Cited (PTO-892)
2. ☐ Information Disclosure Statements (PTO/SB/08), Paper No./Mail Date _____
3. ☐ Examiner's Comment Regarding Requirement for Deposit of Biological Material
4. ☐ Interview Summary (PTO-413), Paper No./Mail Date _____ .
5. ☐ Examiner's Amendment/Comment
6. ☒ Examiner's Statement of Reasons for Allowance
7. ☒ Other *See Continuation Sheet*.

/ADAM DUDA/
Examiner, Art Unit 2473

Continuation of Attachment(s) 7. Other: see attached "Interference Search".

1. The present application is being examined under the pre-AIA first to invent provisions.

REASONS FOR ALLOWANCE

attached **"Response to Arguments"**

1. Applicant's arguments, see Amendment After Final filed **6/1/2014** and see Interview Summaries for **5/13/2014**, with respect to claims **Independent Claims 1, 12, 21, and 28** have been fully considered and are persuasive. The rejection of Independent Claims **1, 12, 21, and 28** has been withdrawn.
2. Claims **1-4, 7-9, 12-16, 18-19, 21-22, 25, and 27-34** are allowable. Claims **5, 6, 10, 11, 17, 20, 23, 24, 26** were canceled by applicant's representative. No claims are amended by examiner's amendment ***(see following pages)***.

attached **"Allowable Subject Matter/Reasons for Allowance"**

1. Independent Claims **1, 12, 21, and 28** are allowable.
2. The following is an examiner's statement of reasons for allowance:
   a. Regarding Independent Claim 1, the prior art made of record, **Joham ("U.S. 2007/0177551 A1")** discloses a **predistorting a signal in at least one of time domain, frequency domain, and spatial domain**. **Joham ("U.S. 2007/0177551 A1")** fails to teach **the combination of limitations as claimed below and specifically wherein the predistoring is performed in each of the time domain, frequency domain, and spatial domain (see Interview for 5/13/2014 and submission on 6/11/2014 by applicant's representative on page 10 of 13)**.

1. (----------) A method for wireless communication in a system including a transmitter, a receiver, and a plurality of propagation paths formed between the transmitter and the receiver which are capable of carrying a signal transmitted by the transmitter to the receiver, the method comprising:

transmitting a first signal from the transmitter to the receiver via a first propagation path of the plurality of propagation paths;

receiving the first signal at the receiver;

performing a channel estimation based on

the first signal to obtain path parameter information of the first propagation path;

sending the channel estimation that includes the path parameter information from the receiver to the transmitter via the first propagation path;

predistorting a second signal at the transmitter in a time domain, a frequency domain, and a spatial domain, according to the channel estimation based on the first signal;

transmitting the predistorted second signal from the transmitter to the receiver via the first propagation path; and

receiving the predistorted second signal at the receiver.

b. Regarding Independent Claim 12, the prior art made of record, **Joham ("U.S. 2007/0177551 A1")** discloses a **predistorting a signal in at least one of time domain, frequency domain, and spatial domain**. **Joham ("U.S. 2007/0177551 A1")** fails to teach **the combination of limitations as claimed below and specifically wherein the predistoring is performed in each of the time domain, frequency domain, and spatial domain (see Interview for 5/13/2014 and submission on 6/11/2014 by applicant's representative on page 10 of 13)**.

12. (----------) A system for wireless communication comprising:

a receiver;

a transmitter; and

a plurality of propagation paths formed between the transmitter and the receiver which are capable of carrying a signal transmitted by the transmitter to the receiver,

wherein the receiver is configured to receive a first signal that is transmitted along a first propagation path of the plurality of propagation paths from the transmitter, perform a channel estimation based on the first signal to obtain path parameter information of the first propagation path, and send the channel estimation that includes the path parameter information to the transmitter via the first

propagation path, and

wherein the transmitter is configured to predistort a second signal in a time domain, a frequency domain, and a spatial domain according to the channel estimation that is based on the first signal and received from the receiver and transmit the predistorted second signal to the receiver via the first propagation path.

c. Regarding Independent Claim 21, the prior art made of record, **Joham ("U.S. 2007/0177551 A1")** discloses a **predistorting a signal in at least one of time domain, frequency domain, and spatial domain**. **Joham ("U.S. 2007/0177551 A1")** fails to teach **the combination of limitations as claimed below and specifically wherein the predistoring is performed in each of the time domain, frequency domain, and spatial domain (see Interview for 5/13/2014 and submission on 6/11/2014 by applicant's representative on page 10 of 13)**.

21. (----------) A base station for performing wireless communication with a receiver in a wireless device via a plurality of propagation paths, the base station comprising:

a transmitter;

a computing device; and

a computer-readable storage medium having computer-executable instructions stored thereon that are executable by the computing device to perform operations comprising:

transmitting a first signal from the transmitter to the receiver via a first propagation path of the plurality of propagation paths;

receiving a channel estimation based on the first signal including path parameter information of the first

propagation path;

predistorting a second signal in a time domain, a frequency domain, and a spatial domain according to the channel estimation based on the first signal; and

transmitting the predistorted second signal from the transmitter to the receiver via the first propagation path.

d. Regarding Independent Claim 28, the prior art made of record, **Joham ("U.S. 2007/0177551 A1")** discloses a **predistorting a signal in at least one of time domain, frequency domain, and spatial domain**. **Joham ("U.S. 2007/0177551 A1")** fails to teach **the combination of limitations as claimed below and specifically wherein the predistoring is performed in each of the time domain, frequency domain, and spatial domain (see Interview for 5/13/2014 and submission on 6/11/2014 by applicant's representative on page 10 of 13)**.

28. (----------) A wireless device for performing wireless communication with a base station with a transmitter via a plurality of propagation paths, the wireless device comprising:

a receiver;

a computing device; and

a computer-readable storage medium having computer-executable instructions stored thereon that are executable by the computing device to perform operations comprising:

receiving a first signal at the receiver via a first propagation path of the plurality of propagation paths;

performing a channel estimation based on the first signal to obtain path parameter information of the first

propagation path;

sending the channel estimation that includes the path parameter information to the transmitter; and

receiving a second signal via the first propagation path, the second signal predistorted in a time domain, a frequency domain, and a spatial domain according to the channel estimation based on the first signal.

Conclusion

Any inquiry concerning this communication or earlier communications from the examiner should be directed to ADAM DUDA whose telephone number is (571)270-5136. The examiner can normally be reached on Mon. - Fri. 9:30 a.m. - 7:00 p.m..

If attempts to reach the examiner by telephone are unsuccessful, the examiner's supervisor, Kwang B. Yao can be reached on (571) 272 - 3182. The fax phone number for the organization where this application or proceeding is assigned is 571-273-8300.

Information regarding the status of an application may be obtained from the Patent Application Information Retrieval (PAIR) system. Status information for published applications may be obtained from either Private PAIR or Public PAIR. Status information for unpublished applications is available through Private PAIR only. For more information about the PAIR system, see http://pair-direct.uspto.gov. Should you have questions on access to the Private PAIR system, contact the Electronic Business Center (EBC) at 866-217-9197 (toll-free). If you would like assistance from a USPTO Customer Service Representative or access to the automated information system, call 800-786-9199 (IN USA OR CANADA) or 571-272-1000.

/ADAM DUDA/
Examiner, Art Unit 2473

/KWANG B YAO/
Supervisory Patent Examiner, Art Unit 2473

Search Notes	Application/Control No.	Applicant(s)/Patent Under Reexamination
	13522422	YIN, XUEFENG
	Examiner	**Art Unit**
	ADAM DUDA	2473

CPC- SEARCHED

Symbol	Date	Examiner
H04L5/0001	3/2014	Adam K. Duda
H04L5/0003	3/2014	Adam K. Duda
---	---	---
H04L5/0014	3/2014	Adam K. Duda
H04L5/0026	3/2014	Adam K. Duda
H04L5/0028	3/2014	Adam K. Duda
---	---	---
H04L5/0021	3/2014	Adam K. Duda
H04L5/0016	3/2014	Adam K. Duda
Updated Search	6/2014	Adam K. Duda

CPC COMBINATION SETS - SEARCHED

Symbol	Date	Examiner

US CLASSIFICATION SEARCHED

Class	Subclass	Date	Examiner
	Updated Search	6/2014	Adam K. Duda
455	114.3	6/2014	Adam K. Duda
455	114.2	6/2014	Adam K. Duda
455	63.1	6/2014	Adam K. Duda
370	203	6/2014	Adam K. Duda
370	338	6/2014	Adam K. Duda

SEARCH NOTES

Search Notes	Date	Examiner
Searched NPL	3/2014	Adam K. Duda
Searched EAST by keyword	3/2014	Adam K. Duda
Searched EAST by CPC classification	3/2014	Adam K. Duda
Updated Search	6/2014	Adam K. Duda

/ADAM DUDA/ Examiner.Art Unit 2473	

INTERFERENCE SEARCH			
US Class/ CPC Symbol	**US Subclass / CPC Group**	**Date**	**Examiner**
	see attached "Interference Search"	6/2014	Adam K. Duda

/ADAM DUDA/ Examiner.Art Unit 2473	

Issue Classification	Application/Control No.	Applicant(s)/Patent Under Reexamination
	13522422	YIN, XUEFENG
	Examiner	**Art Unit**
	ADAM DUDA	2473

CPC						
Symbol					**Type**	**Version**
H04L		5	/	0001	F	2013-01-01
H04W		24	/	02	I	2013-01-01
H04L		1	/	0026	I	2013-01-01
H04L		27	/	01	I	2013-01-01
H04L		5	/	0014	I	2013-01-01
H04L		1	/	12	I	2013-01-01
H04L		5	/	0003	I	2013-01-01
Y02B		60	/	50	A	2013-01-01
			/			
			/			
			/			
			/			
			/			
			/			
			/			

CPC Combination Sets								
Symbol					**Type**	**Set**	**Ranking**	**Version**
			/					
			/					

/ADAM DUDA/ Examiner.Art Unit 2473 (Assistant Examiner)	6/2014 (Date)	**Total Claims Allowed:** 25	
/KWANG B YAO/ Supervisory Patent Examiner.Art Unit 2473 (Primary Examiner)	06/30/2014 (Date)	O.G. Print Claim(s) 1	O.G. Print Figure FIG. 4

Issue Classification	Application/Control No.	Applicant(s)/Patent Under Reexamination
	13522422	YIN, XUEFENG
	Examiner	**Art Unit**
	ADAM DUDA	2473

US ORIGINAL CLASSIFICATION		INTERNATIONAL CLASSIFICATION										
CLASS	SUBCLASS	CLAIMED					NON-CLAIMED					
370	203	H	0	4	J	11 / 00 (2006.01.01)						
CROSS REFERENCE(S)		H	0	4	W	4 / 00 (2009.01.01)						
		H	0	4	B	1 / 04 (2006.01.01)						

CLASS	SUBCLASS (ONE SUBCLASS PER BLOCK)				
370	338				
455	114.3	114.2	63.1		

/ADAM DUDA/ Examiner.Art Unit 2473 (Assistant Examiner)	6/2014 (Date)	**Total Claims Allowed:** 25	
/KWANG B YAO/ Supervisory Patent Examiner.Art Unit 2473 (Primary Examiner)	06/30/2014 (Date)	O.G. Print Claim(s) 1	O.G. Print Figure FIG. 4

U.S. Patent and Trademark Office

Part of Paper No. 20140629

Issue Classification	Application/Control No.	Applicant(s)/Patent Under Reexamination
	13522422	YIN, XUEFENG
	Examiner	**Art Unit**
	ADAM DUDA	2473

☐ Claims renumbered in the same order as presented by applicant ☐ CPA ☐ T.D. ☐ R.1.47

Final	Original	Final	Original	Final	Original	Final	Original	Final	Original	Final	Original	Final	Original	Final	Original
1	1	-	17	24	33										
2	2	13	18	25	34										
3	3	14	19												
4	4	-	20												
-	5	15	21												
-	6	16	22												
5	7	-	23												
6	8	-	24												
7	9	17	25												
-	10	-	26												
-	11	18	27												
8	12	19	28												
9	13	20	29												
10	14	21	30												
11	15	22	31												
12	16	23	32												

/ADAM DUDA/ Examiner.Art Unit 2473 (Assistant Examiner)	6/2014 (Date)	**Total Claims Allowed:** 25	
/KWANG B YAO/ Supervisory Patent Examiner.Art Unit 2473 (Primary Examiner)	06/30/2014 (Date)	O.G. Print Claim(s) 1	O.G. Print Figure FIG. 4

U.S. Patent and Trademark Office

Part of Paper No. 20140629

UNITED STATES PATENT AND TRADEMARK OFFICE

UNITED STATES DEPARTMENT OF COMMERCE
United States Patent and Trademark Office
Address: COMMISSIONER FOR PATENTS
P.O. Box 1450
Alexandria, Virginia 22313-1450
www.uspto.gov

BIB DATA SHEET

CONFIRMATION NO. 1084

SERIAL NUMBER	FILING or 371(c) DATE	CLASS	GROUP ART UNIT	ATTORNEY DOCKET NO.
13/522,422	07/16/2012 RULE	370	2473	I1013.10038US01

APPLICANTS

INVENTORS

Xuefeng Yin, Shanghai, CHINA;

**** CONTINUING DATA ****************************

This application is a 371 of PCT/CN11/77718 07/28/2011

**** FOREIGN APPLICATIONS ****************************

**** IF REQUIRED, FOREIGN FILING LICENSE GRANTED ****

01/20/2013

Foreign Priority claimed	☑ Yes ☐ No	☐ Met after Allowance	STATE OR COUNTRY	SHEETS DRAWINGS	TOTAL CLAIMS	INDEPENDENT CLAIMS
35 USC 119(a-d) conditions met	☐ Yes ☑ No		CHINA	4	25	4
Verified and Acknowledged	/ADAM K DUDA/ Examiner's Signature	Initials				

ADDRESS

Maschoff Brennan
1389 Center Drive, Suite 300
Park City, UT 84098
UNITED STATES

TITLE

USER-FOCUSING TECHNIQUE FOR WIRELESS COMMUNICATION SYSTEMS

FILING FEE RECEIVED		
1670	FEES: Authority has been given in Paper No._____ to charge/credit DEPOSIT ACCOUNT No._____ for following:	☐ All Fees ☐ 1.16 Fees (Filing) ☐ 1.17 Fees (Processing Ext. of time) ☐ 1.18 Fees (Issue) ☐ Other _____ ☐ Credit

BIB (Rev. 05/07).

EAST Search History

EAST Search History (Interference)

Ref #	Hits	Search Query	DBs	Default Operator	Plurals	Time Stamp
L38	7865	(path$2 signal$1 propagat$6).clm.	USPAT; UPAD	AND	OFF	2014/06/30 02:55
L39	3794	(time frequency spatial).clm.	USPAT; UPAD	AND	OFF	2014/06/30 02:55
L40	1076	(predistort$4).clm.	USPAT; UPAD	AND	OFF	2014/06/30 02:55
L41	0	38 39 40	USPAT; UPAD	AND	OFF	2014/06/30 02:55
L42	81	38 39	USPAT; UPAD	AND	OFF	2014/06/30 02:55
L43	11	38 40	USPAT; UPAD	AND	OFF	2014/06/30 02:55
L44	2	39 40	USPAT; UPAD	AND	OFF	2014/06/30 02:55

6/30/2014 3:00:24 AM
E:\OrganizedStuff\e-USPTO-Green_EAST_Workspaces\13522422.wsp

EAST Search History

EAST Search History (Prior Art)

Ref #	Hits	Search Query	DBs	Default Operator	Plurals	Time Stamp
L1	0	"20110103457".did.	USPAT	OR	OFF	2014/06/30 02:31
L2	1	"20110103457".did.	US-PGPUB; USPAT	OR	OFF	2014/06/30 02:31
L3	236	(predistort$4) and (channel near estimat$4)	US-PGPUB; USPAT	OR	OFF	2014/06/30 02:31
L4	101	L3 and ("370" or "455" or "709").clas.	US-PGPUB; USPAT	OR	OFF	2014/06/30 02:31
L5	28	(US-20080261518-$ or US-20090298526-$ or US-20040171385-$ or US-20080268794-$ or US-20060148428-$ or US-20030137972-$ or US-20070177551-$ or US-20090207776-$ or US-20130107733-$ or US-20060067207-$ or US-20090129257-$ or US-20090046569-$ or US-20050259565-$).did. or (US-7751775-$ or US-7826801-$ or US-6983147-$ or US-5598436-$ or US-8582687-$ or US-8542767-$ or US-8331484-$ or US-7519129-$ or US-8189697-$ or US-7965761-$ or US-7349443-$ or US-5602832-$ or US-7586866-$ or US-7532567-$ or US-8179775-$).did.	US-PGPUB; USPAT	OR	OFF	2014/06/30 02:31
L6	15	L4 and L5	USPAT	OR	OFF	2014/06/30 02:31
L7	28	L4 and L5	US-PGPUB; USPAT	OR	OFF	2014/06/30 02:31
L8	5	L7 and (propagat$4 near path$1)	US-PGPUB; USPAT	OR	OFF	2014/06/30 02:31
L9	1531	(H04L5/0001 H04L5/0014 H04L5/0003 H04L5/0026 H04L5/0028 H04L5/0021 H04L5/0016).cpc.	US-PGPUB; USPAT	OR	OFF	2014/06/30 02:31
L10	54	L9 and (finite near impulse near response$3)	US-PGPUB; USPAT	OR	OFF	2014/06/30 02:31
L11	17	L9 and ((coordin$6 near multipoint) and (comp$3))	US-PGPUB; USPAT	OR	OFF	2014/06/30 02:31
L12	0	L11 and L5	US-PGPUB; USPAT	OR	OFF	2014/06/30 02:31
L13	0	L11 and L4	US-PGPUB; USPAT	OR	OFF	2014/06/30 02:31
L14	0	H04L5/0003.cpc. and L3	US-	OR	OFF	2014/06/30

			PGPUB; USPAT			02:31
L15	0	(H04L5/0003).cpc. and L3	US-PGPUB; USPAT	OR	OFF	2014/06/30 02:31
L16	53	(H04L5/0003).cpc.	US-PGPUB; USPAT	OR	OFF	2014/06/30 02:31
L17	3226	(H04L5/0023).cpc.	US-PGPUB; USPAT	OR	OFF	2014/06/30 02:31
L18	8	L17 and L3	US-PGPUB; USPAT	OR	OFF	2014/06/30 02:31
L19	0	L18 and (propagat$4 near path$1)	US-PGPUB; USPAT	OR	OFF	2014/06/30 02:31
L20	348	L17 and (propagat$4 near path$1)	US-PGPUB; USPAT	OR	OFF	2014/06/30 02:31
L21	0	L20 and L3	US-PGPUB; USPAT	OR	OFF	2014/06/30 02:31
L22	0	L11 and correlatorgram	US-PGPUB; USPAT	OR	OFF	2014/06/30 02:31
L23	0	"20070177551".did.	USPAT	OR	OFF	2014/06/30 02:31
L24	1	"20070177551".did.	US-PGPUB; USPAT	OR	OFF	2014/06/30 02:31
L25	21437	(455/114.3 455/114.2 455/63.1 370/203 370/338).ccls.	US-PGPUB; USPAT	OR	OFF	2014/06/30 02:35
L26	128	25 & 9	US-PGPUB; USPAT	OR	OFF	2014/06/30 02:35
L27	9	25 & 5	US-PGPUB; USPAT	OR	OFF	2014/06/30 02:35
L28	23	25 & 3	US-PGPUB; USPAT	OR	OFF	2014/06/30 02:36
L29	39	25 & ((time & frequency & spatial) near domain$1)	USPAT	OR	OFF	2014/06/30 02:44
L30	32	9 & ((time & frequency & spatial) near domain$1)	USPAT	OR	OFF	2014/06/30 02:44
L31	6	3 & ((time & frequency & spatial) near domain$1)	USPAT	OR	OFF	2014/06/30 02:44
L32	1	5 & ((time & frequency & spatial) near domain$1)	USPAT	OR	OFF	2014/06/30 02:44
L33	71	29 30 31	USPAT	OR	OFF	2014/06/30 02:48
L34	6	33 & predistort$4	USPAT	OR	OFF	2014/06/30 02:49

6/ 30/ 2014 2:52:32 AM
E:\ OrganizedStuff\ e-USPTO-Green\ _EAST_Workspaces\ 13522422.wsp

Index of Claims	Application/Control No.	Applicant(s)/Patent Under Reexamination
	13522422	YIN, XUEFENG
	Examiner	**Art Unit**
	ADAM DUDA	2473

✓	Rejected	-	Cancelled	N	Non-Elected	A	Appeal
=	Allowed	÷	Restricted	I	Interference	O	Objected

☒ Claims renumbered in the same order as presented by applicant ☐ CPA ☐ T.D. ☐ R.1.47

CLAIM		DATE								
Final	Original	03/24/2014	06/30/2014							
1	1	✓	=							
2	2	O	=							
3	3	O	=							
4	4	O	=							
-	5	-	-							
-	6	-	-							
5	7	O	=							
6	8	✓	=							
7	9	✓	=							
-	10	-	-							
-	11	-	-							
8	12	✓	=							
9	13	O	=							
10	14	O	=							
11	15	O	=							
12	16	✓	=							
-	17	-	-							
13	18	O	=							
14	19	✓	=							
-	20	-	-							
15	21	✓	=							
16	22	O	=							
-	23	-	-							
-	24	-	-							
17	25	✓	=							
-	26	-	-							
18	27	O	=							
19	28	✓	=							
20	29	O	=							
21	30	O	=							
22	31	O	=							
23	32	✓	=							
24	33	O	=							
25	34	O	=							

IN THE UNITED STATES PATENT AND TRADEMARK OFFICE

In re application of	XuefengYin	
Application No.:	13/522,422	Art Unit 2473
Filed:	July 16, 2012	
Conf. No.:	1084	
For:	USER-FOCUSING TECHNIQUE FOR WIRELESS COMMUNICATION SYSTEMS	
Examiner:	Adam K. Duda	
Customer No.:	97149	
Attorney Docket No.:	I1013.10038US01	

AMENDMENT AND RESPONSE TO 1ST OFFICE ACTION UNDER 37 C.F.R. § 1.111

Mail Stop Amendment
Commissioner for Patents
P.O. Box 1450
Alexandria, VA 22313-1450

Dear Sir:

In response to the Non-Final Office Action mailed March 27, 2014 (the "Office Action"), please consider the following:

Amendments to the Claims are reflected in the listing of claims which begins on page 2 of this paper.

Remarks begin on page 9 of this paper.

AMENDMENTS TO THE CLAIMS

This listing of claims replaces all prior versions and listings of claims in the application:

1. **(Currently Amended)** A method for wireless communication in a system including a transmitter, a receiver, and a plurality of propagation paths formed between the transmitter and the receiver which are capable of carrying a signal transmitted by the transmitter to the receiver, the method comprising:

transmitting a first signal from the transmitter to the receiver via a first propagation path of the plurality of propagation paths;

receiving the first signal at the receiver;

performing a channel estimation based on the first signal to obtain path parameter information of the first propagation path;

sending the channel estimation that includes the path parameter information from the receiver to the transmitter via the first propagation path;

predistorting a second signal at the transmitter in a time domain, a frequency domain, and a spatial domain, according to the channel estimation based on the first signal;

transmitting the predistorted second signal from the transmitter to the receiver via the first propagation path; and

receiving the predistorted second signal at the receiver.

2. **(Currently Amended)** The method of claim 1, wherein the path parameter information of the first propagation path includes at least one of an estimation of a delay, an estimation of a Doppler frequency, an estimation of a direction of arrival, an estimation of a direction of departure, and an estimation of a complex amplitude of the first propagation path.

3. **(Currently Amended)** The method of claim 2, wherein the path parameter information of the first propagation path further includes an estimation of a polarization status of the first propagation path.

4. **(Currently Amended)** The method of claim 1, wherein the path parameter information is obtained by at least one estimation technique of the group consisting of a maximum-likelihood estimation algorithm, periodogram, correlatorgram, spectral-based

methods, Bartlett beamformers, Capon beamformers, subspace–based techniques, MUSIC (MUltiple SIgnal Classification), ESPRIT (Estimation of Signal Parameters via Rotational Invariance Techniques), approximation of the maximum-likelihood method based on iterative schemes, SAGE (Space-Alternating Generalized Expectation-maximization), RiMAX (Richter's Maximum Likelihood method), maximum-a-posteriori based methods, Evidence Framework, Bayesian techniques, tracking algorithms, Kalman filtering techniques, enhanced Kalman filtering techniques, particle filtering techniques, and least-square-error methods.

5. **(Cancelled)**

6. **(Cancelled)**

7. **(Currently Amended)** The method of claim 1, the method further comprising:

performing a system response estimation of the first signal to obtain parameter information of the system;

sending the system response estimation from the receiver to the transmitter via the <u>first</u> propagation path; and

further predistorting the predistorted second signal at the transmitter according to the system response estimation.

8. **(Currently Amended)** The method of claim 1, further comprising[[:]] equalizing the predistorted second signal at the receiver.

9. **(Previously Presented)** The method of claim 8, wherein equalizing the predistorted second signal is performed using a joint processing technique in a coordinated multiple-point (CoMP) system.

10. **(Cancelled)**

11. **(Cancelled)**

12. **(Currently Amended)** A system for wireless communication comprising:

a receiver;

a transmitter; and

a plurality of propagation paths formed between the transmitter and the receiver which are capable of carrying a signal transmitted by the transmitter to the receiver,

wherein the receiver is configured to receive a first signal that is transmitted along a first propagation path of the plurality of propagation paths from the transmitter, perform a channel estimation based on the first signal to obtain path parameter information of the first propagation path, and send the channel estimation that includes the path parameter information to the transmitter via the first propagation path, and

wherein the transmitter is configured to predistort a second signal in a time domain, a frequency domain, and a spatial domain according to the channel estimation that is based on the first signal and received from the receiver and transmit the predistorted second signal to the receiver via the first propagation path.

13. **(Currently Amended)** The system of claim 12, wherein the path parameter information of the first propagation path includes at least one of an estimation of a delay, an estimation of a Doppler frequency, an estimation of a direction of arrival, an estimation of a direction of departure, and an estimation of a complex amplitude of the first propagation path.

14. **(Currently Amended)** The system of claim 12, wherein the path parameter information of the first propagation path further includes an estimation of a polarization status of the first propagation path.

15. **(Previously Presented)** The system of claim 12, wherein the path parameter information is obtained by at least one estimation technique of the group consisting of a maximum likelihood estimation algorithm, periodogram, correlatorgram, spectral-based methods, Bartlett beamformers, Capon beamformers, subspace–based techniques, MUSIC (MUltiple SIgnal Classification), ESPRIT (Estimation of Signal Parameters via Rotational Invariance Techniques), approximation of the maximum-likelihood method based on iterative schemes, SAGE (Space-Alternating Generalized Expectation-maximization), RiMAX (Richter's

Maximum Likelihood method), maximum-a-posteriori based methods, Evidence Framework, Bayesian techniques, tracking algorithms, Kalman filtering techniques, enhanced Kalman filtering techniques, particle filtering techniques, and least-square-error methods.

16. **(Previously Presented)** The system of claim 12, wherein the transmitter and the receiver each comprise multiple antennas in a multiple-input and multiple-output (MIMO) wireless communication system or a single antenna in a single-input and single-output (SISO) wireless communication system.

17. **(Cancelled)**

18. **(Currently Amended)** The system of claim 12, wherein the receiver is further configured to perform a system response estimation of the first signal to obtain parameter information of the system and send the system response estimation from the receiver to the transmitter via the first propagation path, and

wherein the transmitter is further configured to further predistort the predistorted second signal according to the system response estimation.

19. **(Previously Presented)** The system of claim 12, wherein the receiver is further configured to equalize the predistorted second signal.

20. **(Cancelled)**

21. **(Currently Amended)** A base station for performing wireless communication with a receiver in a wireless device via a plurality of propagation paths, the base station comprising:

~~at least one~~ a transmitter;

a computing device; and

a computer-readable storage medium having computer-executable instructions stored thereon that are executable by the computing device to perform operations comprising:

transmitting a first signal from the transmitter to the receiver via a first propagation path of the plurality of propagation paths;

receiving a channel estimation based on the first signal including path parameter information of the first propagation path;

predistorting a second signal in a time domain, a frequency domain, and a spatial domain according to the channel estimation based on the first signal; and

transmitting the predistorted second signal from the transmitter to the receiver via the first propagation path.

22. **(Currently Amended)** The base station of claim 21, wherein the path parameter information of the first propagation path includes at least one of an estimation of a delay, an estimation of a Doppler frequency, an estimation of a direction of arrival, an estimation of a direction of departure, an estimation of a complex amplitude of the first propagation path, and an estimation of a polarization status of the first propagation path.

23. **(Cancelled)**

24. **(Cancelled)**

25. **(Previously Presented)** The base station of claim 21, wherein the transmitter comprises multiple antennas in a multiple-input and multiple-output (MIMO) wireless communication system or a single antenna in a single-input and single-output (SISO) wireless communication system.

26. **(Cancelled)**

27. **(Currently Amended)** The base station of claim 21, the computer-executable instructions stored that are executable by the computing device further comprising:

receiving a system response estimation of the first signal that contains parameter information of the base station, the wireless device, and of the first propagation path; and

further predistorting the predistorted second signal according to the system response estimation.

28. **(Currently Amended)** A wireless device for performing wireless communication with a base station with a transmitter via a plurality of propagation paths, the wireless device comprising:

a ~~at least one~~ receiver;

a computing device; and

a computer-readable storage medium having computer-executable instructions stored thereon that are executable by the computing device to perform operations comprising:

receiving a first signal at the receiver via ~~one~~ a first propagation path of the plurality of propagation paths;

performing a channel estimation based on the first signal to obtain path parameter information of the first propagation path ~~plurality of propagation paths~~;

sending the channel estimation that includes the path parameter information to the transmitter; and

receiving a second signal via the first propagation path ~~one of the plurality of propagation paths~~, the second signal predistorted in a time domain, a frequency domain, and a spatial domain according to the channel estimation based on the first signal.

29. **(Currently Amended)** The wireless device of claim 28, wherein the path parameter information of the first propagation path includes at least one of an estimation of a delay, an estimation of a Doppler frequency, an estimation of a direction of arrival, an estimation of a direction of departure, and an estimation of a complex amplitude of the first propagation path.

30. **(Currently Amended)** The wireless device of claim 29, wherein the path parameter information of the first propagation path further includes an estimation of a polarization status of the first propagation path.

31. **(Previously Presented)** The wireless device of claim 28, wherein the path parameter information is obtained by at least one estimation technique of the group consisting of a maximum likelihood estimation algorithm, periodogram, correlatorgram, spectral-based methods, Bartlett beamformers, Capon beamformers, subspace–based techniques, MUSIC (MUltiple SIgnal Classification), ESPRIT (Estimation of Signal Parameters via Rotational Invariance Techniques), approximation of the maximum-likelihood method based on iterative schemes, SAGE (Space-Alternating Generalized Expectation-maximization), RiMAX (Richter's Maximum Likelihood method), maximum-a-posteriori based methods, Evidence Framework, Bayesian techniques, tracking algorithms, Kalman filtering techniques, enhanced Kalman filtering techniques, particle filtering techniques, and least-square-error methods.

32. **(Previously Presented)** The wireless device of claim 28, wherein the receiver comprises multiple antennas in a multiple-input and multiple-output (MIMO) wireless communication system or a single antenna in a single-input and single-output (SISO) wireless communication system.

33. **(Previously Presented)** The wireless device of claim 28, wherein the computer-executable instructions stored that are executable by the computing device further comprise:

receiving a third signal along another of the plurality of propagation paths, the third signal being phase aligned with the second signal when received by the receiver such that no equalization of the second and third signals is performed by the wireless device.

34. **(Currently Amended)** The wireless device of claim 28, wherein the computer-executable instructions stored that are executable by the computing device further comprise:

generating a system response estimation of the first signal that contains parameter information of the base station, the wireless device, and of the <u>first</u> propagation path; and

receiving the second signal predistorted based on the system response estimation.

REMARKS

This paper is in response to the Non-Final Office Action mailed March 27, 2014 (the "Office Action"). The foregoing amendment amends claims 1-4, 7, 8, 12-14, 18, 21, 22, 27-30, and 34. Claims 5, 6, 10, 11, 17, 20, 23, 24, and 26 were cancelled in a previous paper without prejudice. Claims 1-4, 7-9, 12-16, 18, 19, 21, 22, 25, and 27-34 remain pending. Applicants respectfully request reconsideration of the application in view of the above amendments to the claims and the following remarks. For the Examiner's convenience and reference, Applicants present remarks in the order that the Office Action raises the corresponding issues.

In connection with the prosecution of this case and any related cases, Applicants have, and/or may, discuss various aspects of the disclosure of the cited references as those references are then understood by Applicants. Because such discussion could reflect an incomplete or incorrect understanding of one or more of the references, the position of Applicants with respect to a reference is not necessarily fixed or irrevocable. Applicants thus hereby reserve the right, both during and after prosecution of this case, to modify the views expressed with regard to any reference.

Please note that Applicants do not intend the following remarks to be an exhaustive enumeration of the distinctions between any cited references and the claims. Rather, Applicants present the distinctions below solely by way of example to illustrate some of the differences between the claims and the cited references. Finally, Applicants request that the Examiner carefully review any references discussed below to ensure that Applicants' understanding and discussion of any reference is consistent with the Examiner's understanding.

Unless otherwise explicitly stated, the term "Applicants" is used herein generically and may refer to a single inventor, a set of inventors, an appropriate assignee, or any other entity or person with authority to prosecute this application.

Finality Precluded

If the next office action rejects any of claims 1-4, 7-9, 12-16, 18, 19, 21, 22, 25, and 27-34 using a new ground of rejection, the next office action must be nonfinal because the current Office Action fails to establish a *prima facie* case that claims 1-4, 7-9, 12-16, 18, 19, 21, 22, 25, and 27-34 are anticipated over the cited reference(s). MPEP § 706.07(a) states that "second or

any subsequent actions on the merits shall be final, except where the examiner introduces a new ground of rejection that is neither necessitated by applicant's amendment of the claims, nor based on information submitted in an information disclosure statement filed during the period set forth in 37 C.F.R. 1.97(c) with the fee set forth in 37 C.F.R. 1.17(p)." In the present case, if the next office action rejects any of claims 1-4, 7-9, 12-16, 18, 19, 21, 22, 25, and 27-34 using a new ground of rejection, such a rejection would not be necessitated by this response because none of the rejected claims was amended in order to distinguish over the cited reference(s), as explained in the following remarks. Moreover, this new rejection would not have been based on information submitted in an information disclosure statement filed during the period set forth in 37 C.F.R. § 1.97(c) with the fee set forth in 37 C.F.R. § 1.17(p) because no information disclosure was filed and/or none was filed with the fee. Accordingly, under MPEP § 706.07(a), the next office action must be non-final if it rejects any of claims 1-4, 7-9, 12-16, 18, 19, 21, 22, 25, and 27-34 using a new ground of rejection.

Examiner's Interview

Applicants thank the Examiner for the telephone interview of May 13, 2014. During the interview, the claims, the office action, and the cited references were discussed. In particular, the Examiner explained how he was interpreting the claim element "predistorting a second signal at the transmitter in a time domain, a frequency domain, and a spatial domain," as recited by claim 1. Applicants indicated that the claim element is interpreted to indicate that the second signal is predistorted in each of the time domain, the frequency domain, and the spatial domain. It was Applicants' understanding that the Examiner indicated that this interpretation overcomes the current rejection.

Rejections Under 35 U.S.C. § 112, ¶ 2

The Office Action rejects claims 12, 13, 14, 21, 25, 28, 29, 30, 32, 33, and 34 under 35 U.S.C. § 112, ¶ 2. Applicants have herein amended claims 12, 13, 14, 21, 28, 29, 30, and 34 to address the concerns raised in the Office Action. Accordingly, Applicants respectfully request that the Examiner withdraw the rejections of claims 12, 13, 14, 21, 25, 28, 29, 30, 32, 33, and 34 under 35 under 35 U.S.C. § 112, ¶ 2.

Rejections Under 35 U.S.C. § 102

The Office Action rejects claims 1, 12, 16, 19, 21, 25, 28, and 32 under 35 U.S.C. § 102(b) over Joham et al. (U.S. Publication No. 2007/0177551). Applicants respectfully traverse these rejections.

Claim 1 recites, in part,

> A method for wireless communication in a system including a transmitter, a receiver, and a plurality of propagation paths formed between the transmitter and the receiver which are capable of carrying a signal transmitted by the transmitter to the receiver, the method comprising: ...
>
> predistorting a second signal at the transmitter in a time domain, a frequency domain, and a spatial domain, according to the channel estimation based on the first signal.

Joham describes a method that takes

> into account the deviation between the transmission characteristics or propagation directions of the pilot signals on the one hand and of the signals of the link on the other hand [to] enable[] an at least partial compensation of the error in estimation of the channel for the signals of the links made using the pilot signal, said error resulting from the deviation of the propagation directions. ¶ 12.

Thus, it appears that Joham predistorts signals to compensate for only spatial components of the signals. In contrast, claim 1 recites, "predistorting a second signal at the transmitter in a time domain, a frequency domain, and a spatial domain." Because Joham only discloses compensating for the spatial components and not distorting a signal in three domains, i.e., the time domain, the frequency domain, and the spatial domain as recited by claim 1, Joham fails to disclose all of the elements recited by claim 1.

Independent claims 12, 21, and 28 recite elements analogous to those discussed above with respect to claim 1. Therefore, Joham fails to disclose all of the elements recited by claims 12, 21, and 28. Applicants therefore respectfully request that the Examiner withdraw the rejections under 35 U.S.C. § 102 of independent claims 1, 12, 21, and 28 and of claims 16, 19, 25, and 32 which depend therefrom.

Rejections under 35 U.S.C. § 103(a)

The Office Action rejects claim 9 under 35 U.S.C. § 103(a) as being unpatentable over Joham et al. (U.S. Publication No. 2007/0177551) in view of Gorokhov et al. (U.S. Publication No. 2010/0177746). Claim 9 depends from claim 1 and thus is allowable over Joham for at least the reasons discussed above. Gorokhov is cited as equalizing a signal using a joint processing technique and fails to remedy the deficiencies of Joham. Accordingly, the cited combination fails to teach or suggest all of the elements recited by claim 9. Applicants therefore respectfully request that the Examiner withdraw the rejection of claim 9.

Allowable Subject Matter

The Office Action objects to claims 2-4, 7, 13-15, 18, 22, 27, 29-31, 33, and 34 as being dependent on a rejected base claim, but indicates claims 2-4, 7, 13-15, 18, 22, 27, 29-31, 33, and 34 would be allowable if rewritten in independent form to include all of the elements of the base claim and any intervening claims. Applicants thank the Examiner for the careful review of claims 2-4, 7, 13-15, 18, 22, 27, 29-31, 33, and 34, but decline to present those claims in independent form at this time. Rather, Applicants present remarks and/or amendments herein directed at refining and placing the entire claim set(s) in condition for allowance.

Charge Authorization

The Commissioner is hereby authorized to charge payment of any of the following fees that may be applicable to this communication, or credit any overpayment, to Deposit Account No. 50-5394: (1) any filing fees required under 37 C.F.R. § 1.16; (2) any patent application and reexamination processing fees under 37 C.F.R. § 1.17; and/or (3) any post issuance fees under 37 C.F.R. § 1.20. In addition, if any additional extension of time is required, which has not otherwise been requested, please consider this a petition therefor and charge any additional fees that may be required to Deposit Account No. 50-5394.

CONCLUSION

In view of the foregoing, Applicants submit that the pending claims are allowable. In the event that the Examiner finds remaining impediment to a prompt allowance of this application that may be clarified through a telephone interview or overcome by an Examiner's Amendment, the Examiner is requested to contact the undersigned attorney.

Dated this 11th day of June, 2014.

Respectfully submitted,

/Brian Parke/

Brian Parke
Registration No. 59,226
Attorney for Applicants
Customer No. 97149
Telephone No. (435) 252-1360

Electronic Acknowledgement Receipt

EFS ID:	19269327
Application Number:	13522422
International Application Number:	
Confirmation Number:	1084
Title of Invention:	USER-FOCUSING TECHNIQUE FOR WIRELESS COMMUNICATION SYSTEMS
First Named Inventor/Applicant Name:	Xuefeng Yin
Customer Number:	97149
Filer:	Brian Gary Parke/Liz Smith
Filer Authorized By:	Brian Gary Parke
Attorney Docket Number:	I1013.10038US01
Receipt Date:	11-JUN-2014
Filing Date:	16-JUL-2012
Time Stamp:	11:05:20
Application Type:	U.S. National Stage under 35 USC 371

Payment information:

Submitted with Payment	no

File Listing:

Document Number	Document Description	File Name	File Size(Bytes)/ Message Digest	Multi Part /.zip	Pages (if appl.)
1		CN-810895-02-US-NAT_2014-06-11_First-OA-Response.pdf	74786 1624b54f6bdf9b2df076b7f50fb3026b3ba065cd	yes	13

	Multipart Description/PDF files in .zip description		
	Document Description	**Start**	**End**
	Amendment/Req. Reconsideration-After Non-Final Reject	1	1
	Claims	2	8
	Specification	9	13
Warnings:			
Information:			
	Total Files Size (in bytes):	74786	

This Acknowledgement Receipt evidences receipt on the noted date by the USPTO of the indicated documents, characterized by the applicant, and including page counts, where applicable. It serves as evidence of receipt similar to a Post Card, as described in MPEP 503.

New Applications Under 35 U.S.C. 111
If a new application is being filed and the application includes the necessary components for a filing date (see 37 CFR 1.53(b)-(d) and MPEP 506), a Filing Receipt (37 CFR 1.54) will be issued in due course and the date shown on this Acknowledgement Receipt will establish the filing date of the application.

National Stage of an International Application under 35 U.S.C. 371
If a timely submission to enter the national stage of an international application is compliant with the conditions of 35 U.S.C. 371 and other applicable requirements a Form PCT/DO/EO/903 indicating acceptance of the application as a national stage submission under 35 U.S.C. 371 will be issued in addition to the Filing Receipt, in due course.

New International Application Filed with the USPTO as a Receiving Office
If a new international application is being filed and the international application includes the necessary components for an international filing date (see PCT Article 11 and MPEP 1810), a Notification of the International Application Number and of the International Filing Date (Form PCT/RO/105) will be issued in due course, subject to prescriptions concerning national security, and the date shown on this Acknowledgement Receipt will establish the international filing date of the application.

PTO/SB/06 (09-11)
Approved for use through 1/31/2014. OMB 0651-0032
U.S. Patent and Trademark Office; U.S. DEPARTMENT OF COMMERCE
Under the Paperwork Reduction Act of 1995, no persons are required to respond to a collection of information unless it displays a valid OMB control number.

PATENT APPLICATION FEE DETERMINATION RECORD Substitute for Form PTO-875	Application or Docket Number 13/522,422	Filing Date 07/16/2012	☐ To be Mailed

ENTITY: ☒ LARGE ☐ SMALL ☐ MICRO

APPLICATION AS FILED – PART I

FOR	(Column 1) NUMBER FILED	(Column 2) NUMBER EXTRA	RATE ($)	FEE ($)
☐ BASIC FEE (37 CFR 1.16(a), (b), or (c))	N/A	N/A	N/A	
☐ SEARCH FEE (37 CFR 1.16(k), (i), or (m))	N/A	N/A	N/A	
☐ EXAMINATION FEE (37 CFR 1.16(o), (p), or (q))	N/A	N/A	N/A	
TOTAL CLAIMS (37 CFR 1.16(i))	minus 20 =	*	X $ =	
INDEPENDENT CLAIMS (37 CFR 1.16(h))	minus 3 =	*	X $ =	
☐ APPLICATION SIZE FEE (37 CFR 1.16(s))	If the specification and drawings exceed 100 sheets of paper, the application size fee due is $310 ($155 for small entity) for each additional 50 sheets or fraction thereof. See 35 U.S.C. 41(a)(1)(G) and 37 CFR 1.16(s).			
☐ MULTIPLE DEPENDENT CLAIM PRESENT (37 CFR 1.16(j))				
* If the difference in column 1 is less than zero, enter "0" in column 2.			TOTAL	

APPLICATION AS AMENDED – PART II

AMENDMENT

06/11/2014	(Column 1) CLAIMS REMAINING AFTER AMENDMENT		(Column 2) HIGHEST NUMBER PREVIOUSLY PAID FOR	(Column 3) PRESENT EXTRA	RATE ($)	ADDITIONAL FEE ($)
Total (37 CFR 1.16(i))	* 25	Minus	** 25	= 0	X $80 =	0
Independent (37 CFR 1.16(h))	* 4	Minus	***4	= 0	X $420 =	0
☐ Application Size Fee (37 CFR 1.16(s))						
☐ FIRST PRESENTATION OF MULTIPLE DEPENDENT CLAIM (37 CFR 1.16(j))						
					TOTAL ADD'L FEE	**0**

AMENDMENT

	(Column 1) CLAIMS REMAINING AFTER AMENDMENT		(Column 2) HIGHEST NUMBER PREVIOUSLY PAID FOR	(Column 3) PRESENT EXTRA	RATE ($)	ADDITIONAL FEE ($)
Total (37 CFR 1.16(i))	*	Minus	**	=	X $ =	
Independent (37 CFR 1.16(h))	*	Minus	***	=	X $ =	
☐ Application Size Fee (37 CFR 1.16(s))						
☐ FIRST PRESENTATION OF MULTIPLE DEPENDENT CLAIM (37 CFR 1.16(j))						
					TOTAL ADD'L FEE	

* If the entry in column 1 is less than the entry in column 2, write "0" in column 3.
** If the "Highest Number Previously Paid For" IN THIS SPACE is less than 20, enter "20".
*** If the "Highest Number Previously Paid For" IN THIS SPACE is less than 3, enter "3".
The "Highest Number Previously Paid For" (Total or Independent) is the highest number found in the appropriate box in column 1.

LIE
/FRANCES FIELDS/

This collection of information is required by 37 CFR 1.16. The information is required to obtain or retain a benefit by the public which is to file (and by the USPTO to process) an application. Confidentiality is governed by 35 U.S.C. 122 and 37 CFR 1.14. This collection is estimated to take 12 minutes to complete, including gathering, preparing, and submitting the completed application form to the USPTO. Time will vary depending upon the individual case. Any comments on the amount of time you require to complete this form and/or suggestions for reducing this burden, should be sent to the Chief Information Officer, U.S. Patent and Trademark Office, U.S. Department of Commerce, P.O. Box 1450, Alexandria, VA 22313-1450. DO NOT SEND FEES OR COMPLETED FORMS TO THIS ADDRESS. **SEND TO: Commissioner for Patents, P.O. Box 1450, Alexandria, VA 22313-1450.**
If you need assistance in completing the form, call 1-800-PTO-9199 and select option 2.

UNITED STATES PATENT AND TRADEMARK OFFICE

UNITED STATES DEPARTMENT OF COMMERCE
United States Patent and Trademark Office
Address: COMMISSIONER FOR PATENTS
P.O. Box 1450
Alexandria, Virginia 22313-1450
www.uspto.gov

APPLICATION NO.	FILING DATE	FIRST NAMED INVENTOR	ATTORNEY DOCKET NO.	CONFIRMATION NO.
13/522,422	07/16/2012	Xuefeng Yin	I1013.10038US01	1084

97149 7590 06/06/2014
Maschoff Brennan
1389 Center Drive, Suite 300
Park City, UT 84098

EXAMINER
DUDA, ADAM K

ART UNIT	PAPER NUMBER
2473	

NOTIFICATION DATE	DELIVERY MODE
06/06/2014	ELECTRONIC

Please find below and/or attached an Office communication concerning this application or proceeding.

The time period for reply, if any, is set in the attached communication.

Notice of the Office communication was sent electronically on above-indicated "Notification Date" to the following e-mail address(es):

docket@mabr.com
info@mabr.com

PTOL-90A (Rev. 04/07)

Applicant-Initiated Interview Summary	Application No.	Applicant(s)	
	13/522,422	YIN, XUEFENG	
	Examiner	Art Unit	
	ADAM DUDA	2473	

All participants (applicant, applicant's representative, PTO personnel):

(1) *ADAM DUDA*. (3)_____.

(2) *Brian Parke (Reg. No. 59,226)*. (4)_____.

Date of Interview: *13 May 2014*.

Type: ☒ Telephonic ☐ Video Conference
☐ Personal [copy given to: ☐ applicant ☐ applicant's representative]

Exhibit shown or demonstration conducted: ☐ Yes ☐ No.
If Yes, brief description: _____.

Issues Discussed ☐101 ☐112 ☐102 ☒103 ☒Others
(For each of the checked box(es) above, please describe below the issue and detailed description of the discussion)

Claim(s) discussed: *Indepndent Claims*.

Identification of prior art discussed: *Joham in view of Gorokhov*.

Substance of Interview
(For each issue discussed, provide a detailed description and indicate if agreement was reached. Some topics may include: identification or clarification of a reference or a portion thereof, claim interpretation, proposed amendments, arguments of any applied references etc...)

Discussed usage of the indefinite article with respect to lines 12-13 of claims submitted and amended on 7/16/2012. It was agreed that "at least one" of the 3 domains is disclosed by the combnation of references but not all 3. Examiner suggested applicant's representative clarify usage of the indefinite article "a" in lines 12-13 and whether "one or more of" or "all of" the domain intended to be present.

Applicant recordation instructions: The formal written reply to the last Office action must include the substance of the interview. (See MPEP section 713.04). If a reply to the last Office action has already been filed, applicant is given a non-extendable period of the longer of one month or thirty days from this interview date, or the mailing date of this interview summary form, whichever is later, to file a statement of the substance of the interview

Examiner recordation instructions: Examiners must summarize the substance of any interview of record. A complete and proper recordation of the substance of an interview should include the items listed in MPEP 713.04 for complete and proper recordation including the identification of the general thrust of each argument or issue discussed, a general indication of any other pertinent matters discussed regarding patentability and the general results or outcome of the interview, to include an indication as to whether or not agreement was reached on the issues raised.

☒ Attachment

/ADAM DUDA/ Examiner, Art Unit 2473	/KWANG B YAO/ Supervisory Patent Examiner, Art Unit 2473

Summary of Record of Interview Requirements

Manual of Patent Examining Procedure (MPEP), Section 713.04, Substance of Interview Must be Made of Record
A complete written statement as to the substance of any face-to-face, video conference, or telephone interview with regard to an application must be made of record in the application whether or not an agreement with the examiner was reached at the interview.

Title 37 Code of Federal Regulations (CFR) § 1.133 Interviews
Paragraph (b)

In every instance where reconsideration is requested in view of an interview with an examiner, a complete written statement of the reasons presented at the interview as warranting favorable action must be filed by the applicant. An interview does not remove the necessity for reply to Office action as specified in §§ 1.111, 1.135. (35 U.S.C. 132)

37 CFR §1.2 Business to be transacted in writing.
All business with the Patent or Trademark Office should be transacted in writing. The personal attendance of applicants or their attorneys or agents at the Patent and Trademark Office is unnecessary. The action of the Patent and Trademark Office will be based exclusively on the written record in the Office. No attention will be paid to any alleged oral promise, stipulation, or understanding in relation to which there is disagreement or doubt.

The action of the Patent and Trademark Office cannot be based exclusively on the written record in the Office if that record is itself incomplete through the failure to record the substance of interviews.

It is the responsibility of the applicant or the attorney or agent to make the substance of an interview of record in the application file, unless the examiner indicates he or she will do so. It is the examiner's responsibility to see that such a record is made and to correct material inaccuracies which bear directly on the question of patentability.

Examiners must complete an Interview Summary Form for each interview held where a matter of substance has been discussed during the interview by checking the appropriate boxes and filling in the blanks. Discussions regarding only procedural matters, directed solely to restriction requirements for which interview recordation is otherwise provided for in Section 812.01 of the Manual of Patent Examining Procedure, or pointing out typographical errors or unreadable script in Office actions or the like, are excluded from the interview recordation procedures below. Where the substance of an interview is completely recorded in an Examiners Amendment, no separate Interview Summary Record is required.

The Interview Summary Form shall be given an appropriate Paper No., placed in the right hand portion of the file, and listed on the "Contents" section of the file wrapper. In a personal interview, a duplicate of the Form is given to the applicant (or attorney or agent) at the conclusion of the interview. In the case of a telephone or video-conference interview, the copy is mailed to the applicant's correspondence address either with or prior to the next official communication. If additional correspondence from the examiner is not likely before an allowance or if other circumstances dictate, the Form should be mailed promptly after the interview rather than with the next official communication.

The Form provides for recordation of the following information:
- Application Number (Series Code and Serial Number)
- Name of applicant
- Name of examiner
- Date of interview
- Type of interview (telephonic, video-conference, or personal)
- Name of participant(s) (applicant, attorney or agent, examiner, other PTO personnel, etc.)
- An indication whether or not an exhibit was shown or a demonstration conducted
- An identification of the specific prior art discussed
- An indication whether an agreement was reached and if so, a description of the general nature of the agreement (may be by attachment of a copy of amendments or claims agreed as being allowable). Note: Agreement as to allowability is tentative and does not restrict further action by the examiner to the contrary.
- The signature of the examiner who conducted the interview (if Form is not an attachment to a signed Office action)

It is desirable that the examiner orally remind the applicant of his or her obligation to record the substance of the interview of each case. It should be noted, however, that the Interview Summary Form will not normally be considered a complete and proper recordation of the interview unless it includes, or is supplemented by the applicant or the examiner to include, all of the applicable items required below concerning the substance of the interview.

A complete and proper recordation of the substance of any interview should include at least the following applicable items:
1) A brief description of the nature of any exhibit shown or any demonstration conducted,
2) an identification of the claims discussed,
3) an identification of the specific prior art discussed,
4) an identification of the principal proposed amendments of a substantive nature discussed, unless these are already described on the Interview Summary Form completed by the Examiner,
5) a brief identification of the general thrust of the principal arguments presented to the examiner,
   (The identification of arguments need not be lengthy or elaborate. A verbatim or highly detailed description of the arguments is not required. The identification of the arguments is sufficient if the general nature or thrust of the principal arguments made to the examiner can be understood in the context of the application file. Of course, the applicant may desire to emphasize and fully describe those arguments which he or she feels were or might be persuasive to the examiner.)
6) a general indication of any other pertinent matters discussed, and
7) if appropriate, the general results or outcome of the interview unless already described in the Interview Summary Form completed by the examiner.

Examiners are expected to carefully review the applicant's record of the substance of an interview. If the record is not complete and accurate, the examiner will give the applicant an extendable one month time period to correct the record.

Examiner to Check for Accuracy

If the claims are allowable for other reasons of record, the examiner should send a letter setting forth the examiner's version of the statement attributed to him or her. If the record is complete and accurate, the examiner should place the indication, "Interview Record OK" on the paper recording the substance of the interview along with the date and the examiner's initials.

FAX

Date: 05/07/2014 10:31:02 AM -0600

Pages: 1

Subject: Agenda for Application 13/522,422

To: Adam Duda
Organization: USPTO
Fax Number: 15712706136
Phone Number:

From: Liz Smith for Brian Parke
Organization: Maschoff Brennan
Fax Number: 4352521361
Phone Number: 4352521360
Email: lsmith@mabr.com

Comments:

Sent by Multi-Tech Systems
FaxFinder

If you received this fax in error, or would like to opt-out, please call _____ , fax _____
or email _____

Maschoff Brennan
Intellectual Property and Contract Litigation

435.252.1360 main
435.252.1361 fax
www.maschoffbrennan.com

BRIAN G. PARKE
435.575.1381 direct
bparke@mabr.com

Via Fax
571.270.6136

TO Adam Duda

FROM: Brian Parke
DATE: May 7, 2014

AGENDA
May 13, 2014
11AM ET / 9AM MT
Application No. 13/522,422
Our Ref No. I1013.10038US01

I would like to discuss the how the examiner is interpreting the reference to include all of the elements of the claims. In particular, the element that a signal is predistorted in "a time domain, a frequency domain, and a spatial domain."

1389 Center Drive, Suite 300
Park City, Utah 84098

201 South Main Street, Suite 600
Salt Lake City, Utah 84111

20 Pacifica, Suite 1130
Irvine, California 92618

UNITED STATES PATENT AND TRADEMARK OFFICE

UNITED STATES DEPARTMENT OF COMMERCE
United States Patent and Trademark Office
Address: COMMISSIONER FOR PATENTS
P.O. Box 1450
Alexandria, Virginia 22313-1450
www.uspto.gov

APPLICATION NO.	FILING DATE	FIRST NAMED INVENTOR	ATTORNEY DOCKET NO.	CONFIRMATION NO.
13/522,422	07/16/2012	Xuefeng Yin	I1013.10038US01	1084

97149 7590 03/27/2014
Maschoff Brennan
1389 Center Drive, Suite 300
Park City, UT 84098

EXAMINER
DUDA, ADAM K

ART UNIT	PAPER NUMBER
2473	

NOTIFICATION DATE	DELIVERY MODE
03/27/2014	ELECTRONIC

Please find below and/or attached an Office communication concerning this application or proceeding.

The time period for reply, if any, is set in the attached communication.

Notice of the Office communication was sent electronically on above-indicated "Notification Date" to the following e-mail address(es):

docket@mabr.com
info@mabr.com

PTOL-90A (Rev. 04/07)

Office Action Summary	Application No. 13/522,422	Applicant(s) YIN, XUEFENG	
	Examiner ADAM DUDA	Art Unit 2473	AIA (First Inventor to File) Status No

-- The MAILING DATE of this communication appears on the cover sheet with the correspondence address --

Period for Reply

A SHORTENED STATUTORY PERIOD FOR REPLY IS SET TO EXPIRE 3 MONTHS FROM THE MAILING DATE OF THIS COMMUNICATION.

- Extensions of time may be available under the provisions of 37 CFR 1.136(a). In no event, however, may a reply be timely filed after SIX (6) MONTHS from the mailing date of this communication.
- If NO period for reply is specified above, the maximum statutory period will apply and will expire SIX (6) MONTHS from the mailing date of this communication.
- Failure to reply within the set or extended period for reply will, by statute, cause the application to become ABANDONED (35 U.S.C. § 133). Any reply received by the Office later than three months after the mailing date of this communication, even if timely filed, may reduce any earned patent term adjustment. See 37 CFR 1.704(b).

Status

1)☒ Responsive to communication(s) filed on 7/16/2012.

☐ A declaration(s)/affidavit(s) under **37 CFR 1.130(b)** was/were filed on _____.

2a)☐ This action is **FINAL**. 2b)☒ This action is non-final.

3)☐ An election was made by the applicant in response to a restriction requirement set forth during the interview on _____; the restriction requirement and election have been incorporated into this action.

4)☐ Since this application is in condition for allowance except for formal matters, prosecution as to the merits is closed in accordance with the practice under *Ex parte Quayle*, 1935 C.D. 11, 453 O.G. 213.

Disposition of Claims*

5)☐ Claim(s) 1-4,7-9,12-16,18,19,21,22,25 and 27-34 is/are pending in the application.

5a) Of the above claim(s) 5,6,10,11,17,20,23,24 and 26 is/are withdrawn from consideration.

6)☐ Claim(s) _____ is/are allowed.

7)☒ Claim(s) 1,8,9,12,16,19,21,25,28 and 32 is/are rejected.

8)☒ Claim(s) 2-4,7,13-15,18,22,27,29-31,33 and 34 is/are objected to.

9)☐ Claim(s) _____ are subject to restriction and/or election requirement.

* If any claims have been determined allowable, you may be eligible to benefit from the **Patent Prosecution Highway** program at a participating intellectual property office for the corresponding application. For more information, please see http://www.uspto.gov/patents/init_events/pph/index.jsp or send an inquiry to PPHfeedback@uspto.gov.

Application Papers

10)☐ The specification is objected to by the Examiner.

11)☒ The drawing(s) filed on 7/16/2012 is/are: a)☒ accepted or b)☐ objected to by the Examiner.

Applicant may not request that any objection to the drawing(s) be held in abeyance. See 37 CFR 1.85(a).

Replacement drawing sheet(s) including the correction is required if the drawing(s) is objected to. See 37 CFR 1.121(d).

Priority under 35 U.S.C. § 119

12)☒ Acknowledgment is made of a claim for foreign priority under 35 U.S.C. § 119(a)-(d) or (f).

Certified copies:

a)☐ All b)☐ Some** c)☒ None of the:

1.☐ Certified copies of the priority documents have been received.

2.☐ Certified copies of the priority documents have been received in Application No. _____.

3.☒ Copies of the certified copies of the priority documents have been received in this National Stage application from the International Bureau (PCT Rule 17.2(a)).

** See the attached detailed Office action for a list of the certified copies not received.

Attachment(s)

1) ☒ Notice of References Cited (PTO-892)

2) ☒ Information Disclosure Statement(s) (PTO/SB/08a and/or PTO/SB/08b) Paper No(s)/Mail Date _____.

3) ☐ Interview Summary (PTO-413) Paper No(s)/Mail Date. _____ .

4) ☐ Other: _____.

1. The present application is being examined under the pre-AIA first to invent provisions.

DETAILED ACTION

Status of Claims

Claims 1, 8, 9, 12, 16, 19, 21, 25, 28, and 32 stand rejected.

Claims 2-4, 7, 13-15, 18, 22, 27, 29-31, 33 and 34 stand objected.

Claims 5, 6, 10, 11, 17, 20, 23, 24, and 26 stand previously cancelled by applicant's representative on 7/16/2014.

Claim Rejections - 35 USC § 112

1. The following is a quotation of 35 U.S.C. 112(b):
(b) CONCLUSION.—The specification shall conclude with one or more claims particularly pointing out and distinctly claiming the subject matter which the inventor or a joint inventor regards as the invention.

The following is a quotation of 35 U.S.C. 112 (pre-AIA), second paragraph:
The specification shall conclude with one or more claims particularly pointing out and distinctly claiming the subject matter which the applicant regards as his invention.

2. Claim 12 recites the limitation "the propagation path" in lines 7-8, 8, and 12. Claim 13 recites the limitation “the propagation path” in lines 2 and 4. Claim 14 recites the limitation “the propagation path” in lines 2 and 3. There is insufficient antecedent basis for this limitation in the claim. Specifically, it is unknown to what “propagation

path" does "the propagation path" refer to with regards to claim 12's "a plurality of propagation paths". No specific "propagation path" of the "a plurality of propagation paths" is identified as "the propagation path" of claims"12, 13, and 14.

3. Claim 21 recites the limitation "the transmitter" in lines 8 and 14. Claim 25 recites the limitation "the transmitter" in line 1. There is insufficient antecedent basis for this limitation in the claim. Specifically, it is unknown to what "transmitter" does "the transmitter" refer to with regards to claim 21's "at least one transmitter". No specific "transmitter" of the "at least one transmitter" is identified as "the transmitter" of claims 21 and 25.

4. Claim 28 recites the limitation "the receiver" in line 7. Claim 32 recites the limitation "the receiver" in line 1. Claim 33 recites the limitation "the receiver" in line 4. There is insufficient antecedent basis for this limitation in the claim. Specifically, it is unknown to which "at least one receiver" of claim 28 line 3 the terminology of "the receiver" refers to.

5. Claim 28 recites the limitation "via the one of the plurality of propagation paths" in line 7. There is insufficient antecedent basis for this limitation in the claim. There is sufficient antecedent basis for the limitation of "via one of the plurality of propagation paths"

6. Claim 29 recites the limitation "the propagation path" in lines 2 and 4. Claim 30 recites the limitation “the propagation path” in lines 2 and 3. Claim 34 recites the limitation “the propagation path” in line 4. There is insufficient antecedent basis for this limitation in the claim. Specifically, it is unknown whether “the propagation path” of claims 29 and 30 is a reference to the “a plurality of propagation paths” (see claim 28 line 2) or a reference to “via the one of the plurality of propagation paths” (see claim 28 line 11; where the reference should be correctly written as “the one of the plurality of the propagation paths” instead of “the propagation path”).

Claim Rejections - 35 USC § 102

1. The following is a quotation of the appropriate paragraphs of pre-AIA 35 U.S.C. 102 that form the basis for the rejections under this section made in this Office action:

> A person shall be entitled to a patent unless –
>
> (b) the invention was patented or described in a printed publication in this or a foreign country or in public use or on sale in this country, more than one year prior to the date of application for patent in the United States.

1. Claims 1, 12, 16, 19, 21, 25, 28 and 32 rejected under pre-AIA 35 U.S.C. 102 b as being anticipated by **Joham ("U.S. 2007/0177551 A1")**.

Regarding claim 1, a method for wireless communication in a system (see Joham; abstract; method) including a transmitter (see Joham; abstract; a transmitting station), a receiver (see Joham; abstract; a receiving station), and a plurality of propagation paths (see Joham; paragraph 0004; propagation paths) formed between the transmitter and the receiver which are capable of carrying a signal transmitted by the transmitter to the receiver (see Joham; paragraph 0004; different propagation paths between transmitters and receivers), the method comprising: transmitting a first signal from the transmitter to the receiver via a propagation path of the plurality of propagation paths (see Joham; paragraph 0009; transmission of signal between transmitting and receiving station through propagation paths (see paragraph 0004)); receiving the first signal at the receiver (see Joham; paragraph 0009; from transmitter to receiver therefore being received); performing a channel estimation based on the first signal to

obtain path parameter information of the propagation path (see Joham; paragraph 0009; channel estimation performed based on the signal); sending the channel estimation from the receiver to the transmitter via the propagation path (see Joham; paragraph 0017-0018; the receiving station conveys the channel estimation results to the transmitting station); predistorting a second signal at the transmitter in a time domain, a frequency domain, and a spatial domain, according to the channel estimation based on the first signal (see Joham; paragraph 0016; signals are predistorted according to the estimated measure before they are transmitted by the transmitting station); transmitting the predistorted second signal from the transmitter to the receiver via the propagation path (see Joham; paragraph 0016-0017; transmitting the predistorted signal); and receiving the predistorted second signal at the receiver (see Joham; paragraphs 0016-0018; reception of the transmitted predistorted signal).

Regarding claim 8, the method of claim 1, further comprising: equalizing the predistorted second signal at the receiver (see Joham; the “predistorted” signal is read correctly at the receiver - therefore equalized).

Regarding claim 16, the system of claim 12, wherein the transmitter and the receiver are each comprise multiple antennas in a multiple-input and multiple-output (MIMO) wireless communication system or a single antenna in a single-input and single- output (SISO) wireless communication system (see Joham; wireless transmission therefore being at least one of MIMO or SISO).

Regarding claim 12, a system for wireless communication (see Joham; abstract; system) comprising: a receiver (see Joham; paragraph 0004; different propagation paths between transmitters and receivers); a transmitter (see Joham; abstract; a transmitting station); and a plurality of propagation paths (see Joham; paragraph 0004; propagation paths) formed between the transmitter (see Joham; abstract; a transmitting station) and the receiver which are capable of carrying a signal transmitted by the transmitter to the receiver, wherein the receiver is configured to receive a first signal from the transmitter (see Joham; paragraph 0009; from transmitter to receiver therefore being received), perform a channel estimation based on the first signal to obtain path parameter information of the propagation path (see Joham; paragraph 0009; channel estimation performed based on the signal), and send the channel estimation to the transmitter via the propagation path (see Joham; paragraph 0017-0018; the receiving station conveys the channel estimation results to the transmitting station), and wherein the transmitter is configured to predistort a second signal in a time domain, a frequency domain, and a spatial domain according to the channel estimation that is based on the first signal (see Joham; paragraph 0016; signals are predistorted according to the estimated measure before they are transmitted by the transmitting station) and received from the receiver (see Joham; paragraphs 0016-0018; reception of the transmitted predistorted signal) and transmit the predistorted second signal to the receiver via the propagation path (see Joham; paragraph 0016-0017; transmitting the predistorted signal).

Regarding claim 16, the system of claim 12, wherein the transmitter and the receiver are each comprise multiple antennas in a multiple-input and multiple-output (MIMO) wireless communication system or a single antenna in a single-input and single- output (SISO) wireless communication system (see Joham; wireless transmission therefore being at least one of MIMO or SISO).

Regarding claim 19, the system of claim 12, wherein the receiver is further configured to equalize the predistorted second signal (see Joham; the "predistorted" signal is read correctly at the receiver - therefore equalized).

Regarding claim 21, a base station (see Joham; abstract; figure 1) for performing wireless communication with a receiver (see Joham; paragraph 0004; different propagation paths between transmitters and receivers) in a wireless device via a plurality of propagation paths (see Joham; paragraph 0004; propagation paths), the base station comprising: at least one transmitter (see Joham; abstract; a transmitting station); a computing device; and a computer-readable storage medium having computer-executable instructions stored thereon that are executable by the computing device to perform operations comprising: transmitting a first signal from the transmitter to the receiver via a propagation path of the plurality of propagation paths (see Joham; paragraph 0009; transmission of signal between transmitting and receiving station through propagation paths (see paragraph 0004)); receiving a channel estimation based on the first signal including path parameter information of the propagation path (see

Joham; paragraph 0017-0018; the receiving station conveys the channel estimation results to the transmitting station); predistorting a second signal in a time domain, a frequency domain, and a spatial domain according to the channel estimation based on the first signal (see Joham; paragraph 0016; signals are predistorted according to the estimated measure before they are transmitted by the transmitting station); and transmitting the predistorted second signal from the transmitter to the receiver via the propagation path (see Joham; paragraph 0016-0017; transmitting the predistorted signal).

Regarding claim 25, the base station of claim 21, wherein the transmitter comprises multiple antennas in a multiple-input and multiple-output (MIMO) wireless communication system or a single antenna in a single-input and single-output (SISO) wireless communication system (see Joham; wireless transmission therefore being at least one of MIMO or SISO).

Regarding claim 28. (New) A wireless device (see Joham; abstract; figure 1) for performing wireless communication with a base station with a transmitter (see Joham; abstract; a transmitting station) via a plurality of propagation paths (see Joham; paragraph 0004; propagation paths), the wireless device comprising: at least one receiver (see Joham; paragraph 0004; different propagation paths between transmitters and receivers); a computing device; and a computer-readable storage medium having computer-executable instructions stored thereon that are executable by the computing

device to perform operations comprising: receiving a first signal at the receiver via one of the plurality of propagation paths (see Joham; paragraph 0009; transmission of signal between transmitting and receiving station through propagation paths (see paragraph 0004); paragraph 0009; from transmitter to receiver therefore being received); performing a channel estimation based on the first signal to obtain path parameter information of the plurality of propagation paths (see Joham; paragraph 0009; channel estimation performed based on the signal); sending the channel estimation to the transmitter (see Joham; paragraph 0017-0018; the receiving station conveys the channel estimation results to the transmitting station); receiving a second signal via the one of the plurality of propagation paths (see Joham; paragraphs 0016-0018; reception of the transmitted predistorted signal), the second signal predistorted in a time domain, a frequency domain, and a spatial domain according to the channel estimation based on the first signal (see Joham; paragraph 0016; signals are predistorted according to the estimated measure before they are transmitted by the transmitting station).

Regarding claim 32, the wireless device of claim 28, wherein the receiver comprises multiple antennas in a multiple-input and multiple-output (MIMO) wireless communication system or a single antenna in a single-input and single-output (SISO) wireless communication system (see Joham; wireless transmission therefore being at least one of MIMO or SISO).

Claim Rejections - 35 USC § 103

2. The following is a quotation of pre-AIA 35 U.S.C. 103(a) which forms the basis for all obviousness rejections set forth in this Office action:

> (a) A patent may not be obtained though the invention is not identically disclosed or described as set forth in section 102 of this title, if the differences between the subject matter sought to be patented and the prior art are such that the subject matter as a whole would have been obvious at the time the invention was made to a person having ordinary skill in the art to which said subject matter pertains. Patentability shall not be negatived by the manner in which the invention was made.

3. Claim 9 rejected under pre-AIA 35 U.S.C. 103(a) as being unpatentable over **Joham ("U.S. 2007/0177551 A1")** in view of **Gorokhov ("U.S. 2010/0177746 A10")**.

Joham discloses:

Regarding claim 9, the method of claim 8, further comprising equalizing the predistorted second signal (see Joham; the "predistorted" signal is read correctly at the receiver - therefore equalized).

Joham is silent about:

Regarding claim 9, wherein equalizing the predistorted second signal is performed using a joint processing technique in a coordinated multiple-point (CoMP) system.

However, in a related field of endeavor:

Gorokhov discloses:

Regarding claim 9, wherein equalizing the predistorted second signal is performed using a joint processing technique in a coordinated multiple-point

(CoMP) system (see Gorokhov; abstract; title; paragraphs 0007-0009; performing CoMP transmission therefore transmission in a coordinated multiple-point (CoMP) system).

Given that the invention of Joham and Gorokhov both relate to data transmission in a wireless environment, it would have been obvious to one of ordinary skill in the art at the time of the invention to modify the invention of Joham, as taught by Gorokhov, thereby allowing multiple cells to simultaneously send one or more data streams to one or more UEs on the same time-frequency resources (see Gorokhov; paragraph 0007); improving throughput and providing other advantages (see Gorokhov; paragraph 0007).

Allowable Subject Matter

1. Claims *2-4, 7, 13-15, 18, 22, 27, 29-31, 33 and 34* would be allowable if rewritten to overcome any, and all, objection(s) and / or rejection(s) under 35 U.S.C. 112(b) or 35 U.S.C. 112 (pre-AIA), 2nd paragraph, set forth in this Office action and to include all of the limitations of the base claim and any intervening claims.

Conclusion

Examiner's Note: Examiner has cited particular paragraphs, columns and line numbers in the references applied to the claims above for the convenience of the applicant. Although the specified citations are representative of the teachings of the art and are applied to specific limitations within the individual claim, other passages and figures may apply as well. It is respectfully requested from the applicant in preparing responses, to fully consider the references in entirety as potentially teaching all or part of the claimed invention, as well as the context of the passage as taught by the prior art or disclosed by the Examiner. In the case of amending the claimed invention, Applicant is respectfully requested to indicate the portion(s) of the specification which dictate(s) the structure relied on for proper interpretation and, also to verify and ascertain the metes and bounds of the Claimed invention.

Any inquiry concerning this communication or earlier communications from the examiner should be directed to ADAM DUDA whose telephone number is (571)270-5136. The examiner can normally be reached on Sa, Mo, Tu, We 05:30-11:00 and 15:30-22:00.

If attempts to reach the examiner by telephone are unsuccessful, the examiner's supervisor, Kwang B. Yao can be reached on (571) 272 - 3182. The fax phone number for the organization where this application or proceeding is assigned is 571-273-8300.

Information regarding the status of an application may be obtained from the Patent Application Information Retrieval (PAIR) system. Status information for published applications may be obtained from either Private PAIR or Public PAIR. Status information for unpublished applications is available through Private PAIR only. For more information about the PAIR system, see http://pair-direct.uspto.gov. Should you have questions on access to the Private PAIR system, contact the Electronic Business Center (EBC) at 866-217-9197 (toll-free). If you would like assistance from a USPTO Customer Service Representative or access to the automated information system, call 800-786-9199 (IN USA OR CANADA) or 571-272-1000.

ADAM DUDA
Examiner
Art Unit 2473

/KWANG B YAO/
Supervisory Patent Examiner, Art Unit 2473

Notice of References Cited	Application/Control No. 13/522,422	Applicant(s)/Patent Under Reexamination YIN, XUEFENG	
	Examiner ADAM DUDA	Art Unit 2473	Page 1 of 1

U.S. PATENT DOCUMENTS

*		Document Number Country Code-Number-Kind Code	Date MM-YYYY	Name	Classification
*	A	US-2007/0177551	08-2007	Joham et al.	370/332
*	B	US-2010/0177746	07-2010	Gorokhov et al.	370/336
	C	US-			
	D	US-			
	E	US-			
	F	US-			
	G	US-			
	H	US-			
	I	US-			
	J	US-			
	K	US-			
	L	US-			
	M	US-			

FOREIGN PATENT DOCUMENTS

*		Document Number Country Code-Number-Kind Code	Date MM-YYYY	Country	Name	Classification
	N					
	O					
	P					
	Q					
	R					
	S					
	T					

NON-PATENT DOCUMENTS

*		Include as applicable: Author, Title Date, Publisher, Edition or Volume, Pertinent Pages)
	U	
	V	
	W	
	X	

*A copy of this reference is not being furnished with this Office action. (See MPEP § 707.05(a).)
Dates in MM-YYYY format are publication dates. Classifications may be US or foreign.

EAST Search History

EAST Search History (Prior Art)

Ref #	Hits	Search Query	DBs	Default Operator	Plurals	Time Stamp
L3	0	"20110103457".did.	USPAT	OR	OFF	2014/03/23 20:31
L4	1	"20110103457".did.	US-PGPUB; USPAT	OR	OFF	2014/03/23 20:31
L5	227	(predistort$4) and (channel near estimat$4)	US-PGPUB; USPAT	OR	OFF	2014/03/23 20:31
L6	98	L5 and ("370" or "455" or "709").clas.	US-PGPUB; USPAT	OR	OFF	2014/03/23 20:31
L7	28	(US-20080261518-$ or US-20090298526-$ or US-20040171385-$ or US-20080268794-$ or US-20060148428-$ or US-20030137972-$ or US-20070177551-$ or US-20090207776-$ or US-20130107733-$ or US-20060067207-$ or US-20090129257-$ or US-20090046569-$ or US-20050259565-$).did. or (US-7751775-$ or US-7826801-$ or US-6983147-$ or US-5598436-$ or US-8582687-$ or US-8542767-$ or US-8331484-$ or US-7519129-$ or US-8189697-$ or US-7965761-$ or US-7349443-$ or US-5602832-$ or US-7586866-$ or US-7532567-$ or US-8179775-$).did.	US-PGPUB; USPAT	OR	OFF	2014/03/23 20:38
L8	15	l6 and l7	USPAT	OR	OFF	2014/03/23 20:39
L9	28	l6 and l7	US-PGPUB; USPAT	OR	OFF	2014/03/23 20:39
L10	5	l9 and (propagat$4 near path$1)	US-PGPUB; USPAT	OR	OFF	2014/03/23 21:14
L11	1401	(H04L5/0001 H04L5/0014 H04L5/0003 H04L5/0026 H04L5/0028 H04L5/0021 H04L5/0016).cpc.	US-PGPUB; USPAT	OR	OFF	2014/03/23 21:44
L12	54	l11 and (finite near impulse near response$3)	US-PGPUB; USPAT	OR	OFF	2014/03/23 21:44
L13	10	l11 and ((coordin$6 near multipoint) and (comp$3))	US-PGPUB; USPAT	OR	OFF	2014/03/23 21:45
L14	0	l13 and l7	US-PGPUB; USPAT	OR	OFF	2014/03/23 21:45
L15	0	l13 and l6	US-PGPUB; USPAT	OR	OFF	2014/03/23 21:46
L16	0	H04L5/0003.cpc. and l5	US-	OR	OFF	2014/03/23

			PGPUB; USPAT			21:50
L17	0	(H04L5/0003).cpc. and l5	US-PGPUB; USPAT	OR	OFF	2014/03/23 21:50
L18	53	(H04L5/0003).cpc.	US-PGPUB; USPAT	OR	OFF	2014/03/23 21:50
L19	2882	(H04L5/0023).cpc.	US-PGPUB; USPAT	OR	OFF	2014/03/23 21:50
L20	7	l19 and l5	US-PGPUB; USPAT	OR	OFF	2014/03/23 21:50
L21	0	l20 and (propagat$4 near path$1)	US-PGPUB; USPAT	OR	OFF	2014/03/23 21:53
L22	325	l19 and (propagat$4 near path$1)	US-PGPUB; USPAT	OR	OFF	2014/03/23 21:54
L23	0	l22 and l5	US-PGPUB; USPAT	OR	OFF	2014/03/23 21:54
L24	0	l13 and correlatorgram	US-PGPUB; USPAT	OR	OFF	2014/03/23 23:40

3/24/2014 12:34:07 AM
E:\OrganizedStuff\e-USPTO-Green_EAST_Workspaces\13522422.wsp

PTO/SB/08a (01-10)
Approved for use through 07/31/2012. OMB 0651-0031
U.S. Patent and Trademark Office; U.S. DEPARTMENT OF COMMERCE
Under the Paperwork Reduction Act of 1995, no persons are required to respond to a collection of information unless it contains a valid OMB control number.

INFORMATION DISCLOSURE STATEMENT BY APPLICANT (Not for submission under 37 CFR 1.99)		
	Application Number	
	Filing Date	2011-07-28
	First Named Inventor	Xuefeng YIN
	Art Unit	
	Examiner Name	
	Attorney Docket Number	I1013.10038US01

U.S.PATENTS Remove

Examiner Initial*	Cite No	Patent Number	Kind Code[1]	Issue Date	Name of Patentee or Applicant of cited Document	Pages,Columns,Lines where Relevant Passages or Relevant Figures Appear
	1					

If you wish to add additional U.S. Patent citation information please click the Add button. Add

U.S.PATENT APPLICATION PUBLICATIONS Remove

Examiner Initial*	Cite No	Publication Number	Kind Code[1]	Publication Date	Name of Patentee or Applicant of cited Document	Pages,Columns,Lines where Relevant Passages or Relevant Figures Appear
	1	20110103457	A1	2011-05-05	Phan Huy et al.	

If you wish to add additional U.S. Published Application citation information please click the Add button. Add

FOREIGN PATENT DOCUMENTS Remove

Examiner Initial*	Cite No	Foreign Document Number[3]	Country Code[2] ¡	Kind Code[4]	Publication Date	Name of Patentee or Applicant of cited Document	Pages,Columns,Lines where Relevant Passages or Relevant Figures Appear	T[5]
/A.D./	1	102138309	CN	A	2011-07-27	FRANCE TELECOM	Corresponds to US20110103457A1	☒
/A.D./	2	2011/012031	WO	A1	2011-02-03	ZTE CORPORATION	English Abstract	☒

If you wish to add additional Foreign Patent Document citation information please click the Add button Add

NON-PATENT LITERATURE DOCUMENTS Remove

EFS Web 2.1.17 ALL REFERENCES CONSIDERED EXCEPT WHERE LINED THROUGH. /A.D./

Receipt date: 07/16/2012	Application Number	13522422 - GAU: 2473
INFORMATION DISCLOSURE STATEMENT BY APPLICANT (**Not for submission under 37 CFR 1.99)**	Filing Date	2011-07-28
	First Named Inventor	Xuefeng YIN
	Art Unit	
	Examiner Name	
	Attorney Docket Number	I1013.10038US01

Examiner Initials*	Cite No	Include name of the author (in CAPITAL LETTERS), title of the article (when appropriate), title of the item (book, magazine, journal, serial, symposium, catalog, etc), date, pages(s), volume-issue number(s), publisher, city and/or country where published.	T[5]
/A.D./	1	International Search Report dated 05-03-2012 as received in application no. PCT/CN2011/077718	☐
/A.D./	2	Written Opinion of the International Searching Authority dated 05-03-2012 as received in application no. PCT/ CN2011/077718	☐
/A.D./	3	"3rd Generation Partnership Project; Technical Specification Group Radio Access Network; Further Advancements for E-UTRA Physical Layer Aspects (Release 9)", 3GPP TR36.814, V0.4.1(2009-02), pp 1-31	☐
/A.D./	4	Sampath et al., "Pre-Equalization for MIMO Wireless Channels with Delay Spread", 52nd Vehicular Technology Conference, IEEE VTS-Fall VTC 2000, Vol. 3, pp 1175-1178	☐
/A.D./	5	Holfeld et al., "Order-Recursive Precoding for Cooperative Multi-Point Transmission", Proceedings of the International ITG/IEEE Workshop on Smart Antennas (WSA 2010), 2010, pp 39-45	☐
/A.D./	6	Saleeb, "Design of a smart antenna for reducing co-channel interference in cellular mobile communications", Antennas and Propagation Society International Symposium, IEEE, 1999, Vol. 3, pp 1620 -1623	☐
/A.D./	7	Fleury et al., "Channel Parameter Estimation in Mobile Radio Environments Using the SAGE Algorithm", IEEE Journal on Selected Areas in Communications, 1999, Vol. 17, Issue 3, pp 434-450	☐
/A.D./	8	Odhah et al., "Frequency domain pre-equalization for MIMO broadband CDMA communication systems", National Radio Science Conference, 2009(NRSC 2009), 17-19 March 2009, pp 1 - 8	☐
/A.D./	9	Ning et al., "Joint Processing Precoding for Coordinated Multi-Point Transmission in LTE-A", ZTE Communications, Feb. 2010, Vol.16, No.1, pp 37-39, <http://wwwen.zte.com.cn/endata/magazine/ztecommunications/2010Year/no1/ articles/201003/t20100321_181531.html>	☐
If you wish to add additional non-patent literature document citation information please click the Add button			Add

EFS Web 2.1.17 ALL REFERENCES CONSIDERED EXCEPT WHERE LINED THROUGH. /A.D./

Receipt date: 07/16/2012	Application Number	13522422 - GAU: 2473
INFORMATION DISCLOSURE STATEMENT BY APPLICANT (**Not for submission under 37 CFR 1.99)**	Filing Date	2011-07-28
	First Named Inventor	Xuefeng YIN
	Art Unit	
	Examiner Name	
	Attorney Docket Number	I1013.10038US01

EXAMINER SIGNATURE			
Examiner Signature	/Adam Duda/	Date Considered	03/24/2014

*EXAMINER: Initial if reference considered, whether or not citation is in conformance with MPEP 609. Draw line through a citation if not in conformance and not considered. Include copy of this form with next communication to applicant.

[1] See Kind Codes of USPTO Patent Documents at www.USPTO.GOV or MPEP 901.04. [2] Enter office that issued the document, by the two-letter code (WIPO Standard ST.3). [3] For Japanese patent documents, the indication of the year of the reign of the Emperor must precede the serial number of the patent document. [4] Kind of document by the appropriate symbols as indicated on the document under WIPO Standard ST.16 if possible. [5] Applicant is to place a check mark here if English language translation is attached.

ALL REFERENCES CONSIDERED EXCEPT WHERE LINED THROUGH. /A.D./

Index of Claims	Application/Control No.	Applicant(s)/Patent Under Reexamination
	13522422	YIN, XUEFENG
	Examiner	**Art Unit**
	ADAM DUDA	2473

✓	Rejected	-	Cancelled	N	Non-Elected	A	Appeal
=	Allowed	÷	Restricted	I	Interference	O	Objected

☒ Claims renumbered in the same order as presented by applicant ☐ CPA ☐ T.D. ☐ R.1.47

CLAIM		DATE								
Final	Original	03/24/2014								
	1	✓								
	2	O								
	3	O								
	4	O								
	5	-								
	6	-								
	7	O								
	8	✓								
	9	✓								
	10	-								
	11	-								
	12	✓								
	13	O								
	14	O								
	15	O								
	16	✓								
	17	-								
	18	O								
	19	✓								
	20	-								
	21	✓								
	22	O								
	23	-								
	24	-								
	25	✓								
	26	-								
	27	O								
	28	✓								
	29	O								
	30	O								
	31	O								
	32	✓								
	33	O								
	34	O								

Search Notes	Application/Control No.	Applicant(s)/Patent Under Reexamination
	13522422	YIN, XUEFENG
	Examiner	**Art Unit**
	ADAM DUDA	2473

CPC- SEARCHED

Symbol	Date	Examiner
H04L5/0001	3/2014	Adam K. Duda
H04L5/0003	3/2014	Adam K. Duda
---	---	---
H04L5/0014	3/2014	Adam K. Duda
H04L5/0026	3/2014	Adam K. Duda
H04L5/0028	3/2014	Adam K. Duda
---	---	---
H04L5/0021	3/2014	Adam K. Duda
H04L5/0016	3/2014	Adam K. Duda

CPC COMBINATION SETS - SEARCHED

Symbol	Date	Examiner

US CLASSIFICATION SEARCHED

Class	Subclass	Date	Examiner

SEARCH NOTES

Search Notes	Date	Examiner
Searched NPL	3/2014	Adam K. Duda
Searched EAST by keyword	3/2014	Adam K. Duda
Searched EAST by CPC classification	3/2014	Adam K. Duda

INTERFERENCE SEARCH

US Class/ CPC Symbol	US Subclass / CPC Group	Date	Examiner

/ADAM DUDA/ Examiner.Art Unit 2473	

UNITED STATES PATENT AND TRADEMARK OFFICE

UNITED STATES DEPARTMENT OF COMMERCE
United States Patent and Trademark Office
Address: COMMISSIONER FOR PATENTS
P.O. Box 1450
Alexandria, Virginia 22313-1450
www.uspto.gov

BIB DATA SHEET

CONFIRMATION NO. 1084

SERIAL NUMBER	FILING or 371(c) DATE	CLASS	GROUP ART UNIT	ATTORNEY DOCKET NO.
13/522,422	07/16/2012 RULE	370	2473	I1013.10038US01

APPLICANTS

INVENTORS

Xuefeng Yin, Shanghai, CHINA;

**** CONTINUING DATA ****************************

This application is a 371 of PCT/CN11/77718 07/28/2011

**** FOREIGN APPLICATIONS ****************************

**** IF REQUIRED, FOREIGN FILING LICENSE GRANTED ****

01/20/2013

Foreign Priority claimed	☑ Yes ☐ No	☐ Met after Allowance	STATE OR COUNTRY	SHEETS DRAWINGS	TOTAL CLAIMS	INDEPENDENT CLAIMS
35 USC 119(a-d) conditions met	☐ Yes ☑ No		CHINA	4	25	4
Verified and Acknowledged	/ADAM K DUDA/ Examiner's Signature	Initials				

ADDRESS

Maschoff Brennan
1389 Center Drive, Suite 300
Park City, UT 84098
UNITED STATES

TITLE

USER-FOCUSING TECHNIQUE FOR WIRELESS COMMUNICATION SYSTEMS

FILING FEE RECEIVED		
1670	FEES: Authority has been given in Paper No._____ to charge/credit DEPOSIT ACCOUNT No._____ for following:	☐ All Fees ☐ 1.16 Fees (Filing) ☐ 1.17 Fees (Processing Ext. of time) ☐ 1.18 Fees (Issue) ☐ Other _____ ☐ Credit

BIB (Rev. 05/07).

UNITED STATES PATENT AND TRADEMARK OFFICE

UNITED STATES DEPARTMENT OF COMMERCE
United States Patent and Trademark Office
Address: COMMISSIONER FOR PATENTS
P.O. Box 1450
Alexandria, Virginia 22313-1450
www.uspto.gov

APPLICATION NUMBER	FILING OR 371(C) DATE	FIRST NAMED APPLICANT	ATTY. DOCKET NO./TITLE
13/522,422	07/16/2012	Xuefeng Yin	I1013.10038US01

CONFIRMATION NO. 1084

97149
Maschoff Brennan
1389 Center Drive, Suite 300
Park City, UT 84098

PUBLICATION NOTICE

OC000000060904270

Title:USER-FOCUSING TECHNIQUE FOR WIRELESS COMMUNICATION SYSTEMS

Publication No.US-2013-0107733-A1
Publication Date:05/02/2013

NOTICE OF PUBLICATION OF APPLICATION

The above-identified application will be electronically published as a patent application publication pursuant to 37 CFR 1.211, et seq. The patent application publication number and publication date are set forth above.

The publication may be accessed through the USPTO's publically available Searchable Databases via the Internet at www.uspto.gov. The direct link to access the publication is currently http://www.uspto.gov/patft/.

The publication process established by the Office does not provide for mailing a copy of the publication to applicant. A copy of the publication may be obtained from the Office upon payment of the appropriate fee set forth in 37 CFR 1.19(a)(1). Orders for copies of patent application publications are handled by the USPTO's Office of Public Records. The Office of Public Records can be reached by telephone at (703) 308-9726 or (800) 972-6382, by facsimile at (703) 305-8759, by mail addressed to the United States Patent and Trademark Office, Office of Public Records, Alexandria, VA 22313-1450 or via the Internet.

In addition, information on the status of the application, including the mailing date of Office actions and the dates of receipt of correspondence filed in the Office, may also be accessed via the Internet through the Patent Electronic Business Center at www.uspto.gov using the public side of the Patent Application Information and Retrieval (PAIR) system. The direct link to access this status information is currently http://pair.uspto.gov/. Prior to publication, such status information is confidential and may only be obtained by applicant using the private side of PAIR.

Further assistance in electronically accessing the publication, or about PAIR, is available by calling the Patent Electronic Business Center at 1-866-217-9197.

Office of Data Managment, Application Assistance Unit (571) 272-4000, or (571) 272-4200, or 1-888-786-0101

UNITED STATES PATENT AND TRADEMARK OFFICE

UNITED STATES DEPARTMENT OF COMMERCE
United States Patent and Trademark Office
Address: COMMISSIONER FOR PATENTS
P.O. Box 1450
Alexandria, Virginia 22313-1450
www.uspto.gov

U.S. APPLICATION NUMBER NO.	FIRST NAMED APPLICANT	ATTY. DOCKET NO.
13/522,422	Xuefeng Yin	I1013.10038US01

97149
Maschoff Gilmore & Israelsen
1389 Center Drive, Suite 300
Park City, UT 84098

INTERNATIONAL APPLICATION NO.	
PCT/CN11/77718	
I.A. FILING DATE	PRIORITY DATE
07/28/2011	

CONFIRMATION NO. 1084
371 ACCEPTANCE LETTER

OC000000058789979

Date Mailed: 01/24/2013

NOTICE OF ACCEPTANCE OF APPLICATION UNDER 35 U.S.C 371 AND 37 CFR 1.495

The applicant is hereby advised that the United States Patent and Trademark Office in its capacity as a Designated / Elected Office (37 CFR 1.495), has determined that the above identified international application has met the requirements of 35 U.S.C. 371, and is ACCEPTED for national patentability examination in the United States Patent and Trademark Office.

The United States Application Number assigned to the application is shown above and the relevant dates are:

07/16/2012	07/16/2012
DATE OF RECEIPT OF 35 U.S.C. 371(c)(1), (c)(2) and (c)(4) REQUIREMENTS	DATE OF COMPLETION OF ALL 35 U.S.C. 371 REQUIREMENTS

A Filing Receipt (PTO-103X) will be issued for the present application in due course. **THE DATE APPEARING ON THE FILING RECEIPT AS THE " FILING DATE" IS THE DATE ON WHICH THE LAST OF THE 35 U.S.C. 371 (c)(1), (c)(2) and (c)(4) REQUIREMENTS HAS BEEN RECEIVED IN THE OFFICE. THIS DATE IS SHOWN ABOVE.** *The filing date of the above identified application is the international filing date of the international application (Article 11(3) and 35 U.S.C. 363).* Once the Filing Receipt has been received, send all correspondence to the Group Art Unit designated thereon.

The following items have been received:

- Copy of the International Application filed on 07/16/2012
- English Translation of the IA filed on 07/16/2012
- Copy of the International Search Report filed on 07/16/2012
- Copy of IPE Report filed on 07/16/2012
- Preliminary Amendments filed on 07/16/2012
- Information Disclosure Statements filed on 07/16/2012
- Oath or Declaration filed on 07/16/2012
- Request for Immediate Examination filed on 07/16/2012
- U.S. Basic National Fees filed on 07/16/2012
- Assignment filed on 07/16/2012
- Assignee Statement for PGPUB filed on 07/16/2012
- Power of Attorney filed on 07/16/2012
- Authorization to Permit Access filed on 07/16/2012

FORM PCT/DO/EO/903 (371 Acceptance Notice)

Applicant is reminded that any communications to the United States Patent and Trademark Office must be mailed to the address given in the heading and include the U.S. application no. shown above (37 CFR 1.5)

PATRICIA A BOOKER

Telephone: (571) 272-3882

FORM PCT/DO/EO/903 (371 Acceptance Notice)

UNITED STATES PATENT AND TRADEMARK OFFICE

UNITED STATES DEPARTMENT OF COMMERCE
United States Patent and Trademark Office
Address: COMMISSIONER FOR PATENTS
P.O. Box 1450
Alexandria, Virginia 22313-1450
www.uspto.gov

APPLICATION NUMBER	FILING or 371(c) DATE	GRP ART UNIT	FIL FEE REC'D	ATTY.DOCKET.NO	TOT CLAIMS	IND CLAIMS
13/522,422	07/16/2012		1670	I1013.10038US01	25	4

CONFIRMATION NO. 1084

97149
Maschoff Gilmore & Israelsen
1389 Center Drive, Suite 300
Park City, UT 84098

FILING RECEIPT

"OC000000058789978"

Date Mailed: 01/24/2013

Receipt is acknowledged of this non-provisional patent application. The application will be taken up for examination in due course. Applicant will be notified as to the results of the examination. Any correspondence concerning the application must include the following identification information: the U.S. APPLICATION NUMBER, FILING DATE, NAME OF APPLICANT, and TITLE OF INVENTION. Fees transmitted by check or draft are subject to collection. Please verify the accuracy of the data presented on this receipt. **If an error is noted on this Filing Receipt, please submit a written request for a Filing Receipt Correction. Please provide a copy of this Filing Receipt with the changes noted thereon. If you received a "Notice to File Missing Parts" for this application, please submit any corrections to this Filing Receipt with your reply to the Notice. When the USPTO processes the reply to the Notice, the USPTO will generate another Filing Receipt incorporating the requested corrections**

Inventor(s)
Xuefeng Yin, Shanghai, CHINA;

Applicant(s)
Xuefeng Yin, Shanghai, CHINA;

Assignment For Published Patent Application
EMPIRE TECHNOLOGY DEVELOPMENT LLC, Wilmington, DE

Power of Attorney: The patent practitioners associated with Customer Number 97149

Domestic Priority data as claimed by applicant
This application is a 371 of PCT/CN11/77718 07/28/2011

Foreign Applications for which priority is claimed (You may be eligible to benefit from the **Patent Prosecution Highway** program at the USPTO. Please see http://www.uspto.gov for more information.) - None.
Foreign application information must be provided in an Application Data Sheet in order to constitute a claim to foreign priority. See 37 CFR 1.55 and 1.76.

Permission to Access - A proper **Authorization to Permit Access to Application by Participating Offices** (PTO/SB/39 or its equivalent) has been received by the USPTO.

If Required, Foreign Filing License Granted: 01/20/2013
The country code and number of your priority application, to be used for filing abroad under the Paris Convention, is **US 13/522,422**
Projected Publication Date: 05/02/2013
Non-Publication Request: No
Early Publication Request: No

Title

USER-FOCUSING TECHNIQUE FOR WIRELESS COMMUNICATION SYSTEMS

Preliminary Class

PROTECTING YOUR INVENTION OUTSIDE THE UNITED STATES

Since the rights granted by a U.S. patent extend only throughout the territory of the United States and have no effect in a foreign country, an inventor who wishes patent protection in another country must apply for a patent in a specific country or in regional patent offices. Applicants may wish to consider the filing of an international application under the Patent Cooperation Treaty (PCT). An international (PCT) application generally has the same effect as a regular national patent application in each PCT-member country. The PCT process **simplifies** the filing of patent applications on the same invention in member countries, but **does not result** in a grant of "an international patent" and does not eliminate the need of applicants to file additional documents and fees in countries where patent protection is desired.

Almost every country has its own patent law, and a person desiring a patent in a particular country must make an application for patent in that country in accordance with its particular laws. Since the laws of many countries differ in various respects from the patent law of the United States, applicants are advised to seek guidance from specific foreign countries to ensure that patent rights are not lost prematurely.

Applicants also are advised that in the case of inventions made in the United States, the Director of the USPTO must issue a license before applicants can apply for a patent in a foreign country. The filing of a U.S. patent application serves as a request for a foreign filing license. The application's filing receipt contains further information and guidance as to the status of applicant's license for foreign filing.

Applicants may wish to consult the USPTO booklet, "General Information Concerning Patents" (specifically, the section entitled "Treaties and Foreign Patents") for more information on timeframes and deadlines for filing foreign patent applications. The guide is available either by contacting the USPTO Contact Center at 800-786-9199, or it can be viewed on the USPTO website at http://www.uspto.gov/web/offices/pac/doc/general/index.html.

For information on preventing theft of your intellectual property (patents, trademarks and copyrights), you may wish to consult the U.S. Government website, http://www.stopfakes.gov. Part of a Department of Commerce initiative, this website includes self-help "toolkits" giving innovators guidance on how to protect intellectual property in specific countries such as China, Korea and Mexico. For questions regarding patent enforcement issues, applicants may call the U.S. Government hotline at 1-866-999-HALT (1-866-999-4158).

LICENSE FOR FOREIGN FILING UNDER

Title 35, United States Code, Section 184

Title 37, Code of Federal Regulations, 5.11 & 5.15

GRANTED

The applicant has been granted a license under 35 U.S.C. 184, if the phrase "IF REQUIRED, FOREIGN FILING LICENSE GRANTED" followed by a date appears on this form. Such licenses are issued in all applications where the conditions for issuance of a license have been met, regardless of whether or not a license may be required as set forth in 37 CFR 5.15. The scope and limitations of this license are set forth in 37 CFR 5.15(a) unless an earlier

license has been issued under 37 CFR 5.15(b). The license is subject to revocation upon written notification. The date indicated is the effective date of the license, unless an earlier license of similar scope has been granted under 37 CFR 5.13 or 5.14.

This license is to be retained by the licensee and may be used at any time on or after the effective date thereof unless it is revoked. This license is automatically transferred to any related applications(s) filed under 37 CFR 1.53(d). This license is not retroactive.

The grant of a license does not in any way lessen the responsibility of a licensee for the security of the subject matter as imposed by any Government contract or the provisions of existing laws relating to espionage and the national security or the export of technical data. Licensees should apprise themselves of current regulations especially with respect to certain countries, of other agencies, particularly the Office of Defense Trade Controls, Department of State (with respect to Arms, Munitions and Implements of War (22 CFR 121-128)); the Bureau of Industry and Security, Department of Commerce (15 CFR parts 730-774); the Office of Foreign AssetsControl, Department of Treasury (31 CFR Parts 500+) and the Department of Energy.

NOT GRANTED

No license under 35 U.S.C. 184 has been granted at this time, if the phrase "IF REQUIRED, FOREIGN FILING LICENSE GRANTED" DOES NOT appear on this form. Applicant may still petition for a license under 37 CFR 5.12, if a license is desired before the expiration of 6 months from the filing date of the application. If 6 months has lapsed from the filing date of this application and the licensee has not received any indication of a secrecy order under 35 U.S.C. 181, the licensee may foreign file the application pursuant to 37 CFR 5.15(b).

SelectUSA

The United States represents the largest, most dynamic marketplace in the world and is an unparalleled location for business investment, innovation, and commercialization of new technologies. The U.S. offers tremendous resources and advantages for those who invest and manufacture goods here. Through SelectUSA, our nation works to promote and facilitate business investment. SelectUSA provides information assistance to the international investor community; serves as an ombudsman for existing and potential investors; advocates on behalf of U.S. cities, states, and regions competing for global investment; and counsels U.S. economic development organizations on investment attraction best practices. To learn more about why the United States is the best country in the world to develop technology, manufacture products, deliver services, and grow your business, visit http://www.SelectUSA.gov or call +1-202-482-6800.

PATENT APPLICATION FEE DETERMINATION RECORD

Substitute for Form PTO-875

Application or Docket Number
13/522,422

APPLICATION AS FILED - PART I

FOR	(Column 1) NUMBER FILED	(Column 2) NUMBER EXTRA	SMALL ENTITY RATE($)	SMALL ENTITY FEE($)	OR	OTHER THAN SMALL ENTITY RATE($)	OTHER THAN SMALL ENTITY FEE($)
BASIC FEE (37 CFR 1.16(a), (b), or (c))	N/A	N/A	N/A			N/A	390
SEARCH FEE (37 CFR 1.16(k), (i), or (m))	N/A	N/A	N/A			N/A	500
EXAMINATION FEE (37 CFR 1.16(o), (p), or (q))	N/A	N/A	N/A			N/A	250
TOTAL CLAIMS (37 CFR 1.16(i))	25 minus 20 =	* 5			OR	x 62 =	310
INDEPENDENT CLAIMS (37 CFR 1.16(h))	4 minus 3 =	* 1				x 250 =	250
APPLICATION SIZE FEE (37 CFR 1.16(s))	If the specification and drawings exceed 100 sheets of paper, the application size fee due is $310 ($155 for small entity) for each additional 50 sheets or fraction thereof. See 35 U.S.C. 41(a)(1)(G) and 37 CFR 1.16(s).						0.00
MULTIPLE DEPENDENT CLAIM PRESENT (37 CFR 1.16(j))							0.00
* If the difference in column 1 is less than zero, enter "0" in column 2.			TOTAL			TOTAL	1700

APPLICATION AS AMENDED - PART II

		(Column 1) CLAIMS REMAINING AFTER AMENDMENT		(Column 2) HIGHEST NUMBER PREVIOUSLY PAID FOR	(Column 3) PRESENT EXTRA	SMALL ENTITY RATE($)	SMALL ENTITY ADDITIONAL FEE($)	OR	OTHER THAN SMALL ENTITY RATE($)	OTHER THAN SMALL ENTITY ADDITIONAL FEE($)
AMENDMENT A	Total (37 CFR 1.16(i))	*	Minus	**	=	x =		OR	x =	
AMENDMENT A	Independent (37 CFR 1.16(h))	*	Minus	***	=	x =		OR	x =	
AMENDMENT A	Application Size Fee (37 CFR 1.16(s))									
AMENDMENT A	FIRST PRESENTATION OF MULTIPLE DEPENDENT CLAIM (37 CFR 1.16(j))							OR		
						TOTAL ADD'L FEE		OR	TOTAL ADD'L FEE	

		(Column 1) CLAIMS REMAINING AFTER AMENDMENT		(Column 2) HIGHEST NUMBER PREVIOUSLY PAID FOR	(Column 3) PRESENT EXTRA	RATE($)	ADDITIONAL FEE($)	OR	RATE($)	ADDITIONAL FEE($)
AMENDMENT B	Total (37 CFR 1.16(i))	*	Minus	**	=	x =		OR	x =	
AMENDMENT B	Independent (37 CFR 1.16(h))	*	Minus	***	=	x =		OR	x =	
AMENDMENT B	Application Size Fee (37 CFR 1.16(s))									
AMENDMENT B	FIRST PRESENTATION OF MULTIPLE DEPENDENT CLAIM (37 CFR 1.16(j))							OR		
						TOTAL ADD'L FEE		OR	TOTAL ADD'L FEE	

* If the entry in column 1 is less than the entry in column 2, write "0" in column 3.
** If the "Highest Number Previously Paid For" IN THIS SPACE is less than 20, enter "20".
*** If the "Highest Number Previously Paid For" IN THIS SPACE is less than 3, enter "3".
The "Highest Number Previously Paid For" (Total or Independent) is the highest found in the appropriate box in column 1.

PTO/SB/96 (07-09)
Approved for use through 07/31/2012. OMB 0651-0031
U.S. Patent and Trademark Office; U.S. DEPARTMENT OF COMMERCE
Under the Paperwork Reduction Act of 1995, no persons are required to respond to a collection of information unless it displays a valid OMB control number.

STATEMENT UNDER 37 CFR 3.73(b)

Applicant/Patent Owner: Xuefeng YIN

Application No./Patent No.: 13/522,422 Filed/Issue Date: 28-JUL-2011

Titled: USER-FOCUSING TECHNIQUE FOR WIRELESS COMMUNICATION SYSTEMS

EMPIRE TECHNOLOGY DEVELOPMENT LLC, a corporation
(Name of Assignee) (Type of Assignee, e.g., corporation, partnership, university, government agency, etc.

states that it is:

1. ☒ the assignee of the entire right, title, and interest in;

2. ☐ an assignee of less than the entire right, title, and interest in
(The extent (by percentage) of its ownership interest is _____ %); or

3. ☐ the assignee of an undivided interest in the entirety of (a complete assignment from one of the joint inventors was made)

the patent application/patent identified above, by virtue of either:

A. ☐ An assignment from the inventor(s) of the patent application/patent identified above. The assignment was recorded in the United States Patent and Trademark Office at Reel _____, Frame _____, or for which a copy therefore is attached.

OR

B. ☒ A chain of title from the inventor(s), of the patent application/patent identified above, to the current assignee as follows:

1. From: Inventor To: Shanghai SAGE Information Technology Co. L
The document was recorded in the United States Patent and Trademark Office at
Reel 028558, Frame 0025, or for which a copy thereof is attached.

2. From: Shanghai SAGE Information Technology Co. L To: EMPIRE TECHNOLOGY DEVELOPMENT LL(
The document was recorded in the United States Patent and Trademark Office at
Reel 028558, Frame 0126, or for which a copy thereof is attached.

3. From: _____ To: _____
The document was recorded in the United States Patent and Trademark Office at
Reel _____, Frame _____, or for which a copy thereof is attached.

☐ Additional documents in the chain of title are listed on a supplemental sheet(s).

☒ As required by 37 CFR 3.73(b)(1)(i), the documentary evidence of the chain of title from the original owner to the assignee was, or concurrently is being, submitted for recordation pursuant to 37 CFR 3.11.

[NOTE: A separate copy (*i.e.*, a true copy of the original assignment document(s)) must be submitted to Assignment Division in accordance with 37 CFR Part 3, to record the assignment in the records of the USPTO. See MPEP 302.08]

The undersigned (whose title is supplied below) is authorized to act on behalf of the assignee.

/R. Burns Israelsen/ Reg. #42685 — Signature
2012-07-18 — Date

R. Burns Israelsen — Printed or Typed Name
Attorney — Title

This collection of information is required by 37 CFR 3.73(b). The information is required to obtain or retain a benefit by the public which is to file (and by the USPTO to process) an application. Confidentiality is governed by 35 U.S.C. 122 and 37 CFR 1.11 and 1.14. This collection is estimated to take 12 minutes to complete, including gathering, preparing, and submitting the completed application form to the USPTO. Time will vary depending upon the individual case. Any comments on the amount of time you require to complete this form and/or suggestions for reducing this burden, should be sent to the Chief Information Officer, U.S. Patent and Trademark Office, U.S. Department of Commerce, P.O. Box 1450, Alexandria, VA 22313-1450. DO NOT SEND FEES OR COMPLETED FORMS TO THIS ADDRESS. **SEND TO: Commissioner for Patents, P.O. Box 1450, Alexandria, VA 22313-1450.**

If you need assistance in completing the form, call 1-800-PTO-9199 and select option 2.

Privacy Act Statement

The **Privacy Act of 1974 (P.L. 93-579)** requires that you be given certain information in connection with your submission of the attached form related to a patent application or patent. Accordingly, pursuant to the requirements of the Act, please be advised that: (1) the general authority for the collection of this information is 35 U.S.C. 2(b)(2); (2) furnishing of the information solicited is voluntary; and (3) the principal purpose for which the information is used by the U.S. Patent and Trademark Office is to process and/or examine your submission related to a patent application or patent. If you do not furnish the requested information, the U.S. Patent and Trademark Office may not be able to process and/or examine your submission, which may result in termination of proceedings or abandonment of the application or expiration of the patent.

The information provided by you in this form will be subject to the following routine uses:

1. The information on this form will be treated confidentially to the extent allowed under the Freedom of Information Act (5 U.S.C. 552) and the Privacy Act (5 U.S.C 552a). Records from this system of records may be disclosed to the Department of Justice to determine whether disclosure of these records is required by the Freedom of Information Act.
2. A record from this system of records may be disclosed, as a routine use, in the course of presenting evidence to a court, magistrate, or administrative tribunal, including disclosures to opposing counsel in the course of settlement negotiations.
3. A record in this system of records may be disclosed, as a routine use, to a Member of Congress submitting a request involving an individual, to whom the record pertains, when the individual has requested assistance from the Member with respect to the subject matter of the record.
4. A record in this system of records may be disclosed, as a routine use, to a contractor of the Agency having need for the information in order to perform a contract. Recipients of information shall be required to comply with the requirements of the Privacy Act of 1974, as amended, pursuant to 5 U.S.C. 552a(m).
5. A record related to an International Application filed under the Patent Cooperation Treaty in this system of records may be disclosed, as a routine use, to the International Bureau of the World Intellectual Property Organization, pursuant to the Patent Cooperation Treaty.
6. A record in this system of records may be disclosed, as a routine use, to another federal agency for purposes of National Security review (35 U.S.C. 181) and for review pursuant to the Atomic Energy Act (42 U.S.C. 218(c)).
7. A record from this system of records may be disclosed, as a routine use, to the Administrator, General Services, or his/her designee, during an inspection of records conducted by GSA as part of that agency's responsibility to recommend improvements in records management practices and programs, under authority of 44 U.S.C. 2904 and 2906. Such disclosure shall be made in accordance with the GSA regulations governing inspection of records for this purpose, and any other relevant (*i.e.*, GSA or Commerce) directive. Such disclosure shall not be used to make determinations about individuals.
8. A record from this system of records may be disclosed, as a routine use, to the public after either publication of the application pursuant to 35 U.S.C. 122(b) or issuance of a patent pursuant to 35 U.S.C. 151. Further, a record may be disclosed, subject to the limitations of 37 CFR 1.14, as a routine use, to the public if the record was filed in an application which became abandoned or in which the proceedings were terminated and which application is referenced by either a published application, an application open to public inspection or an issued patent.
9. A record from this system of records may be disclosed, as a routine use, to a Federal, State, or local law enforcement agency, if the USPTO becomes aware of a violation or potential violation of law or regulation.

Electronic Acknowledgement Receipt

EFS ID:	13279671
Application Number:	13522422
International Application Number:	
Confirmation Number:	1084
Title of Invention:	USER-FOCUSING TECHNIQUE FOR WIRELESS COMMUNICATION SYSTEMS
First Named Inventor/Applicant Name:	Xuefeng YIN
Customer Number:	97149
Filer:	Robert Burns Israelsen/Tonya Kusitor
Filer Authorized By:	Robert Burns Israelsen
Attorney Docket Number:	I1013.10038US01
Receipt Date:	18-JUL-2012
Filing Date:	
Time Stamp:	12:41:45
Application Type:	U.S. National Stage under 35 USC 371

Payment information:

Submitted with Payment	no

File Listing:

Document Number	Document Description	File Name	File Size(Bytes)/ Message Digest	Multi Part /.zip	Pages (if appl.)
1	Assignee showing of ownership per 37 CFR 3.73(b).	CN-810895-02-US-NAT_373b.pdf	427922 4fe35c22a87b3458719ee867a25e4154a67f64c6	no	2

Warnings:

Information:

Total Files Size (in bytes):	427922

This Acknowledgement Receipt evidences receipt on the noted date by the USPTO of the indicated documents, characterized by the applicant, and including page counts, where applicable. It serves as evidence of receipt similar to a Post Card, as described in MPEP 503.

New Applications Under 35 U.S.C. 111
If a new application is being filed and the application includes the necessary components for a filing date (see 37 CFR 1.53(b)-(d) and MPEP 506), a Filing Receipt (37 CFR 1.54) will be issued in due course and the date shown on this Acknowledgement Receipt will establish the filing date of the application.

National Stage of an International Application under 35 U.S.C. 371
If a timely submission to enter the national stage of an international application is compliant with the conditions of 35 U.S.C. 371 and other applicable requirements a Form PCT/DO/EO/903 indicating acceptance of the application as a national stage submission under 35 U.S.C. 371 will be issued in addition to the Filing Receipt, in due course.

New International Application Filed with the USPTO as a Receiving Office
If a new international application is being filed and the international application includes the necessary components for an international filing date (see PCT Article 11 and MPEP 1810), a Notification of the International Application Number and of the International Filing Date (Form PCT/RO/105) will be issued in due course, subject to prescriptions concerning national security, and the date shown on this Acknowledgement Receipt will establish the international filing date of the application.

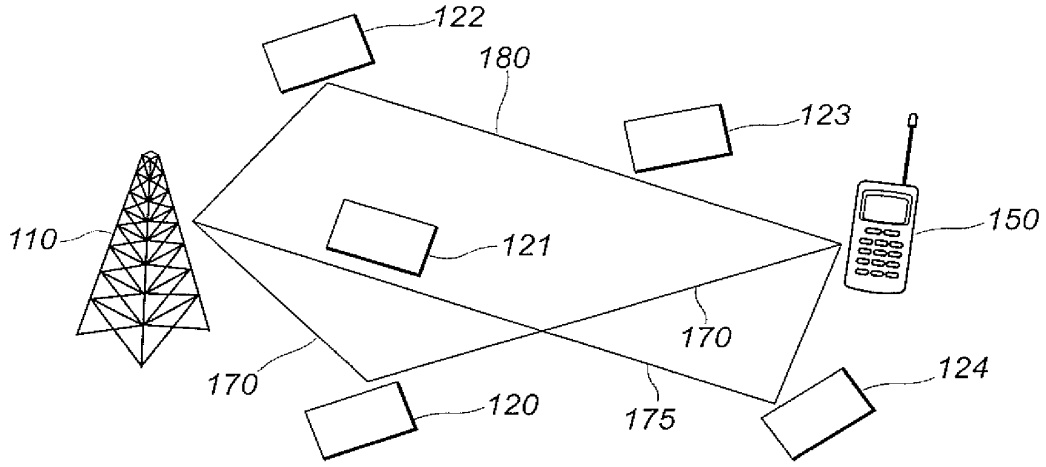
122
180
123
110
121
150
170
170
124
120
175

FIG. 1

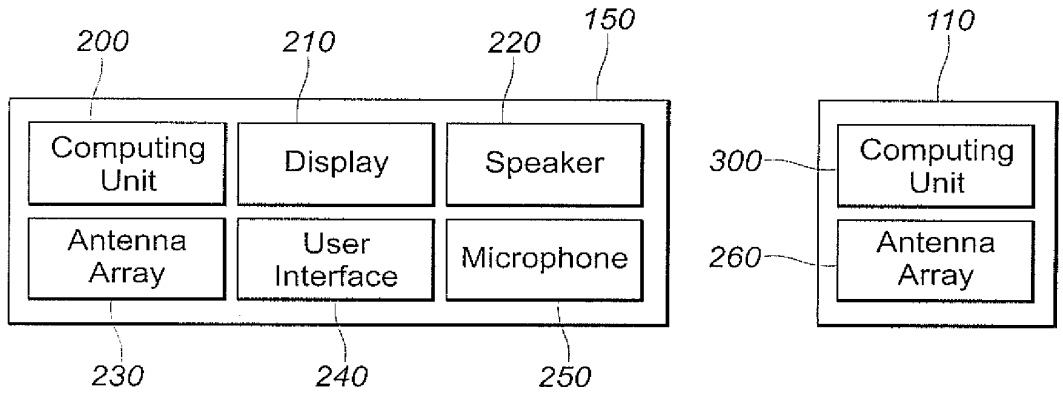
200
210
220
150
110
Computing Unit
Display
Speaker
300
Computing Unit
Antenna Array
User Interface
Microphone
260
Antenna Array
230
240
250

FIG. 2

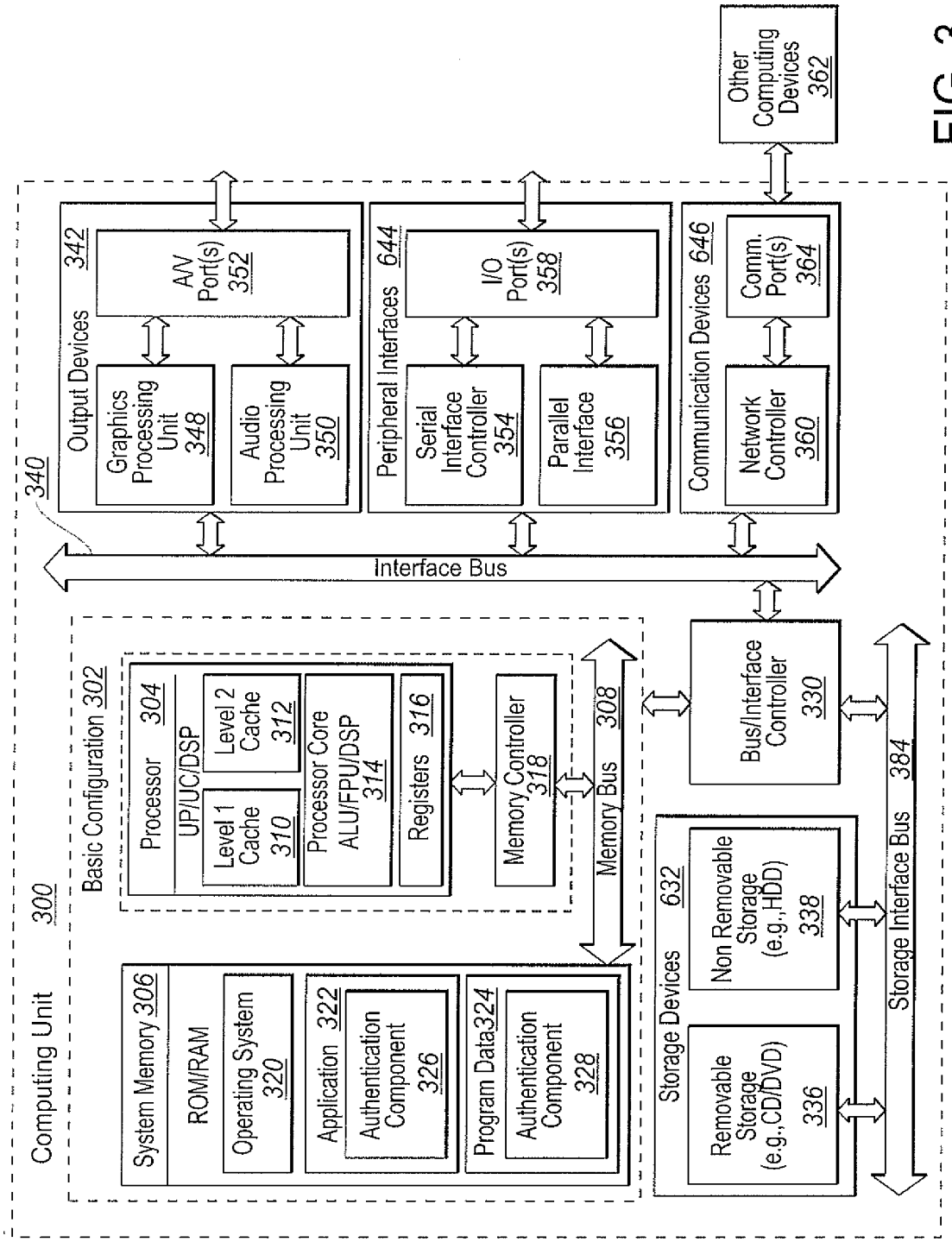
Computing Unit 300
Basic Configuration 302
Processor 304
UP/UC/DSP
Level 1 Cache 310
Level 2 Cache 312
Processor Core ALU/FPU/DSP 314
Registers 316
Memory Controller 318
Memory Bus 308
System Memory 306
ROM/RAM
Operating System 320
Application 322
Authentication Component 326
Program Data324
Authentication Component 328
Storage Devices 632
Removable Storage (e.g.,CD/DVD) 336
Non Removable Storage (e.g.,HDD) 338
Storage Interface Bus 384
Bus/Interface Controller 330
Interface Bus
340
Output Devices 342
Graphics Processing Unit 348
A/V Port(s) 352
Audio Processing Unit 350
Peripheral Interfaces 644
Serial Interface Controller 354
I/O Port(s) 358
Parallel Interface 356
Communication Devices 646
Network Controller 360
Comm. Port(s) 364
Other Computing Devices 362

FIG. 3

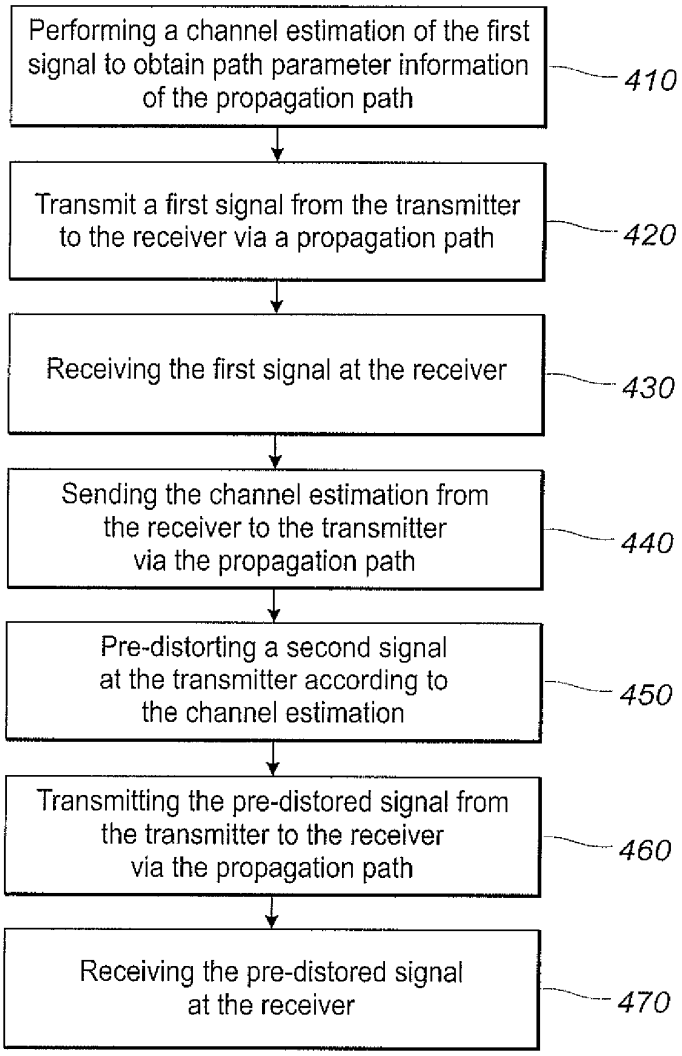
Performing a channel estimation of the first signal to obtain path parameter information of the propagation path
410
Transmit a first signal from the transmitter to the receiver via a propagation path
420
Receiving the first signal at the receiver
430
Sending the channel estimation from the receiver to the transmitter via the propagation path
440
Pre-distorting a second signal at the transmitter according to the channel estimation
450
Transmitting the pre-distored signal from the transmitter to the receiver via the propagation path
460
Receiving the pre-distored signal at the receiver
470

FIG. 4

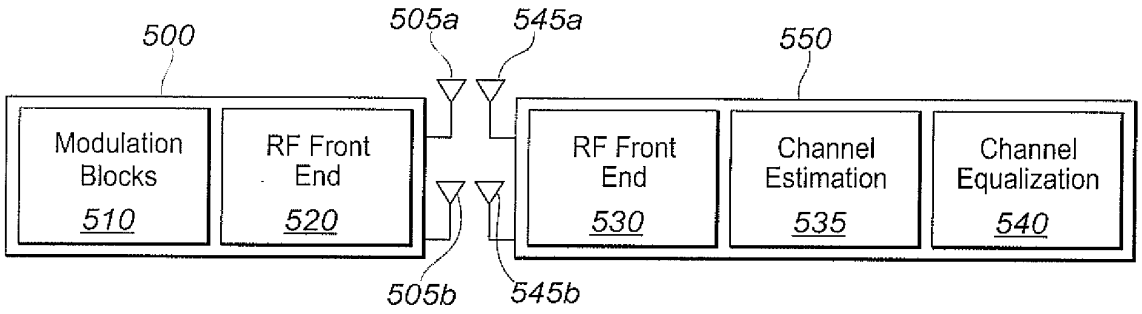

FIG. 5A
(PRIOR ART)

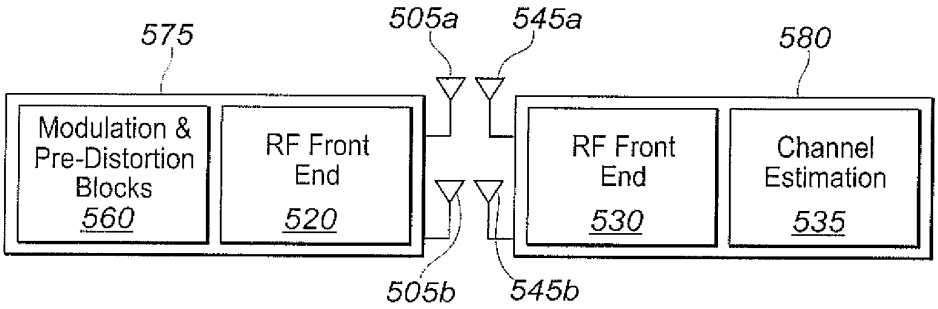

FIG. 5B

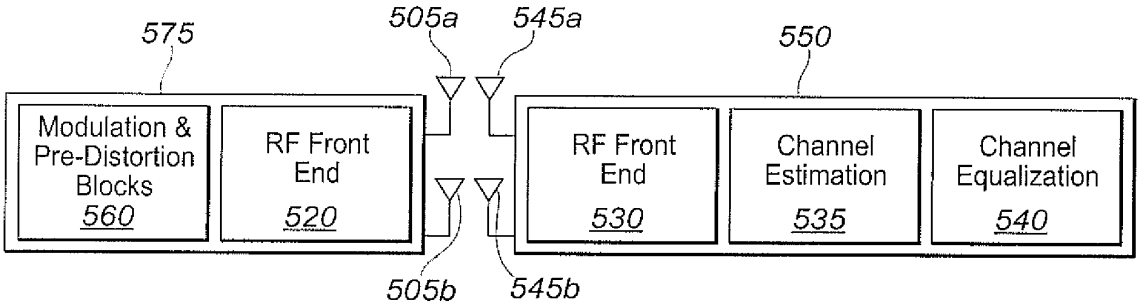

FIG. 5C

CLAIMS

1. A method for wireless communication in a system including a transmitter, a receiver, and a plurality of propagation paths formed between the transmitter and the receiver which are capable of carrying a signal transmitted by the transmitter to the receiver, the method comprising:

transmitting a first signal from the transmitter to the receiver via a propagation path of the plurality of propagation paths;

receiving the first signal at the receiver;

performing a channel estimation of the first signal to obtain path parameter information of the propagation path;

sending the channel estimation from the receiver to the transmitter via the propagation path;

predistorting a second signal at the transmitter according to the channel estimation;

transmitting the predistorted signal from the transmitter to the receiver via the propagation path; and

receiving the predistorted signal at the receiver.

2. The method of claim 1, wherein the path parameter information of the propagation path includes at least one of an estimation of a delay, an estimation of a Doppler frequency, an estimation of a direction of arrival, an estimation of a direction of departure, and a complex amplitude of the propagation path.

3. The method of claim 2, wherein the path parameter information of the propagation path further includes an estimation of a polarization status of the propagation path.

4. The method of claim 1, wherein the parameter path information is obtained by at least one estimation technique of the group consisting of a maximum likelihood estimation algorithm, periodogram, correlatorgram, spectral-based methods, Bartlett beamformers, Capon beamformers, subspace –based techniques, MUSIC (MUltiple SIgnal Classification), ESPRIT (Estimation of Signal Parameters via Rotational Invariance Techniques), approximation of the maximum-likelihood method based on iterative schemes, SAGE (Space-Alternating Generalized Expectation-maximization),

RiMAX (Richter's Maximum Likelihood method), maximum-a-posteriori based methods, Evidence Framework, Bayesian techniques, tracking algorithms, the Kalman filtering techniques, enhanced Kalman filtering techniques, particle filtering techniques, and least-square-error methods.

5. The method of claim 1, wherein the transmitter and the receiver are each comprised of multiple antennas in a multiple-input and multiple-output (MIMO) wireless communication system.

6. The method of claim 1, wherein the transmitter and the receiver are each comprised of a single antenna in a single-input and single-output (SISO) wireless communication system.

7. The method of claim 1, the method further comprising:

performing a system response estimation of the first signal to obtain parameter information of the communication system;

sending the system estimation from the receiver to the transmitter via the propagation path; and

predistorting a second signal at the transmitter according to the system estimation.

8. The method of claim 1, further comprising: equalizing the predistorted signal at the receiver.

9. The method of claim 8, wherein equalizing the predistorted signal is performed using at least one of the group consisting of a joint processing technique in a coordinated multiple-point (CoMP) system.

10. The method of claim 1, wherein the transmitter is a base station and the receiver is a mobile device.

11. The method of claim 1, wherein the system comprises a plurality of receivers and a plurality of transmitter, and wherein the plurality of propagation paths are formed between the plurality of transmitters and the plurality of receivers.

12. A system for wireless communication comprising:

a receiver;

a transmitter; and

a plurality of propagation paths formed between the transmitter and the receiver which are capable of carrying a signal transmitted by the transmitter to the receiver,

wherein the receiver is configured to receive a first signal from the transmitter, perform a channel estimation of the first signal to obtain path parameter information of the propagation path, and send the channel estimation to the transmitter via the propagation path, and

wherein the transmitter is configured to predistort a second signal according to the channel estimation received from the receiver and transmit the predistorted signal to the receiver via the propagation path.

13. The system of claim 12, wherein the path parameter information of the propagation path includes at least one of an estimation of a delay, an estimation of a Doppler frequency, an estimation of a direction of arrival, an estimation of a direction of departure, and a complex amplitude of the propagation path.

14. The system of claim 12, wherein the path parameter information of the propagation path further includes an estimation a polarization status of the propagation path.

15. The system of claim 12, wherein the parameter path information is obtained by at least one estimation technique of the group consisting of a maximum likelihood estimation algorithm, periodogram, correlatorgram, spectral-based methods, Bartlett beamformers, Capon beamformers, subspace –based techniques, MUSIC (MUltiple SIgnal Classification), ESPRIT (Estimation of Signal Parameters via Rotational Invariance Techniques), approximation of the maximum-likelihood method based on iterative schemes, SAGE (Space-Alternating Generalized Expectation-maximization), RiMAX (Richter's Maximum Likelihood method), maximum-a-posteriori based methods, Evidence Framework, Bayesian techniques, tracking algorithms, the Kalman filtering techniques, enhanced Kalman filtering techniques, particle filtering techniques, and least-square-error methods.

16. The system of claim 12, wherein the transmitter and the receiver are each comprised of multiple antennas in a multiple-input and multiple-output (MIMO) wireless communication system.

17. The system of claim 12, wherein the transmitter and the receiver are each comprised of a single antenna in a single-input and single-output (SISO) wireless communication system.

18. The system according to claim 12,wherein the receiver is further configured to perform a system response estimation of the first signal to obtain parameter information of the communication system and send the system estimation from the receiver to the transmitter via the propagation path, and

wherein the transmitter is further configured to predistort the second signal according to the system estimation.

19. The system according to claim 12, wherein the receiver is further configured to equalize the predistorted signal.

20. The system according to claim 12, wherein the transmitter is a base station and the receiver is a mobile device.

21. A base station for performing wireless communication with a receiver in a wireless device via a plurality of propagation paths, the base station comprising:

at least one transmitter;

a computing device; and

a computer-readable storage medium having computer-executable instructions stored thereon that are executable by the computing device to perform operations comprising:

transmitting a first signal from the transmitter to the receiver via a propagation path of the plurality of propagation paths;

receiving a channel estimation of the first signal including path parameter information of the propagation path;

predistorting a second signal according to the channel estimation; and

transmitting the predistorted signal from the transmitter to the receiver via the propagation path.

22. The base station of claim 21, wherein the path parameter information of the propagation path includes at least one of an estimation of a delay, an estimation of a Doppler frequency, an estimation of a direction of arrival, an estimation of a direction of departure, and a complex amplitude of the propagation path.

23. The base station of claim 21, wherein the path parameter information of the propagation path further includes an estimation of a polarization status of the propagation path.

24. The base station of claim 21, wherein the parameter path information is obtained by at least one estimation technique of the group consisting of a maximum likelihood estimation algorithm, periodogram, correlatorgram, spectral-based methods, Bartlett beamformers, Capon beamformers, subspace –based techniques, MUSIC (MUltiple SIgnal Classification), ESPRIT (Estimation of Signal Parameters via Rotational Invariance Techniques), approximation of the maximum-likelihood method based on iterative schemes, SAGE (Space-Alternating Generalized Expectation-maximization), RiMAX (Richter's Maximum Likelihood method), maximum-a-posteriori based methods, Evidence Framework, Bayesian techniques, tracking algorithms, the Kalman filtering techniques, enhanced Kalman filtering techniques, particle filtering techniques, and least-square-error methods.

25. The base station of claim 21, wherein the transmitter is comprised of multiple antennas in a multiple-input and multiple-output (MIMO) wireless communication system.

26. The base station of claim 21, wherein the transmitter comprises a single antenna in a single-input and single-output (SISO) wireless communication system.

27. The base station of claim 21, the computer-executable instructions stored that are executable by the computing device further comprising:

receiving a system response estimation of the first signal to obtain parameter information of the communication system; and

predistorting a second signal according to the system estimation.

USER-FOCUSING TECHNIQUE FOR WIRELESS COMMUNICATION SYSTEMS

BACKGROUND

[001] Wireless communication systems confront more and more challenges. One such challenge exists in hot-spots where highly concentrated groups of mobile users create large demands of system capacity. Other challenges exist where co-located heterogeneous networks in certain areas create interference and difficulties in inter-network handover. In order to address these and other problems, various techniques have been developed, such as relay techniques and coordinated multi-point (CoMP) transmission. Both the relay and the CoMP techniques are used to increase the number of parallel channels between the source of a signal and the destination. While these techniques increase system performance, they also require careful network planning and require high computation resources. In some instances, the techniques operate by exploiting additional resources from propagation channels.

[002] Other techniques, such as equalization techniques achieve the same purposes without changing current system configurations. Equalization techniques are used in the receivers of the system in order to recover the original transmitted signal by removing any distortions that arise in the transmittal. When the impact of a channel is perfectly equalized, the signals arriving at the receiver from the different paths are then "aligned" in phases and can be added constructively. Typical examples of equalization techniques include the following: (1) RAKE receiving technique, which equalizes the channel in the delay domain; (2) the frequency equalization technique which has been widely adopted in the receivers based on OFDM transmission; and (3) the time-frequency equalization technique used in the receivers of 4G systems, such as the TD-Long-Term-Evolution (LTE) wireless communication systems.

[003] One problem with these techniques, however is that they require that channel equalization be performed at the receiver, meaning that the receiver have additional resources in order to perform the equalization.

SUMMARY

[004] In one embodiment, a method is provided for conducting wireless communications in a communications system. Such a communications system can include a transmitter, a receiver, and a plurality of propagation paths formed between the transmitter and the receiver. The propagation paths can be configured to be capable of carrying a signal transmitted by the transmitter to the receiver. The method can include: transmitting a first signal from the transmitter to the receiver via a propagation path of the plurality of propagation paths; receiving the first signal at the receiver; performing a channel estimation of the first signal to obtain path parameter information of the propagation path; sending the path parameter information from the receiver to the transmitter via the propagation path; predistorting a second signal at the transmitter according to the path parameter information; transmitting the predistorted signal from the transmitter to the receiver via the propagation path; and receiving the predistorted signal at the receiver.

[005] In one embodiment, a communications system can be provided for conducting wireless communications. The system can include a receiver, a transmitter and a plurality of propagation paths formed between the transmitter and the receiver which are capable of carrying a signal transmitted by the transmitter to the receiver. The receiver can be configured to receive a first signal from the transmitter, perform a channel estimation of the first signal to obtain path parameter information of the propagation path, and send the path parameter information of the path to the transmitter via the propagation path. The transmitter can be configured to predistort a second signal according to the channel estimation received from the receiver, and transmit the predistorted signal to the receiver via the propagation path.

[006] In one embodiment, a base station can be provided for performing wireless communications with a receiver in a wireless device via a plurality of propagation paths. The base station can include at least one transmitter; a computing device; and a computer-readable storage medium having computer-executable instructions stored thereon that are executable by the computing device to perform operations. The computing device operations can include: transmitting a first signal from the transmitter to the receiver via a propagation path of the plurality of propagation paths; receiving a channel estimation of the first signal including path parameter information of the propagation path;

predistorting a second signal according to the channel estimation; and transmitting the predistorted signal from the transmitter to the receiver via the propagation path.

[007] The foregoing summary is illustrative only and is not intended to be in any way limiting. In addition to the illustrative aspects, embodiments, and features described above, further aspects, embodiments, and features will become apparent by reference to the drawings and the following detailed description.

BRIEF DESCRIPTION OF THE FIGURES

[008] The foregoing and following information as well as other features of this disclosure will become more fully apparent from the following description and appended claims, taken in conjunction with the accompanying drawings. Understanding that these drawings depict only several embodiments in accordance with the disclosure and are, therefore, not to be considered limiting of its scope, the disclosure will be described with additional specificity and detail through use of the accompanying drawings, in which:

[009] FIG. 1 includes a schematic representation of an embodiment of a wireless communication system which is capable of performing a user-focusing technique as described herein;

[010] FIG. 2 includes a block diagram illustrating an embodiment of a transmitter and a receiver which may be used in performing a user-focusing technique as described herein;

[011] FIG. 3 includes a diagram representing an embodiment of a computing unit of a transmitter used in performing a user-focusing technique as described herein;

[012] FIG. 4 includes a flow diagram illustrating an embodiment of a user-focusing technique in a wireless communication system;

[013] FIG. 5A includes a diagram representing a conventional wireless communication system;

[014] FIG. 5B includes a diagram representing a wireless communication system which is capable of performing a user-focusing technique as described herein; and

[015] FIG. 5C includes a diagram representing a wireless communication system according to another embodiment of a system which is capable of performing a user-focusing technique as described herein,

[016] all arranged in accordance with at least one of the embodiments described herein, and which arrangement may be modified in accordance with the disclosure provided herein by one of ordinary skill in the art.

DETAILED DESCRIPTION

[017] In the following detailed description, reference is made to the accompanying drawings, which form a part hereof. In the drawings, similar symbols typically identify similar components, unless context dictates otherwise. The illustrative embodiments described in the detailed description, drawings, and claims are not meant to be limiting. Other embodiments may be utilized, and other changes may be made, without departing from the spirit or scope of the subject matter presented herein. It will be readily understood that the aspects of the present disclosure, as generally described herein, and illustrated in the figures, can be arranged, substituted, combined, separated, and designed in a wide variety of different configurations, all of which are explicitly contemplated herein.

[018] Figure 1 includes a schematic representation of an embodiment of a wireless communication system which is capable of performing a user-focusing technique as described herein. Figure 1 illustrates a single-link communication scenario between a base station which is configured so as to act as a transmitter 110 and a mobile station which is configured so as to act as a receiver 150. Between the transmitter 110 and the receiver 150 are a number of buildings 120-124, which act as scatterers and bouncing points of communication signals traveling between the transmitter 110 and the receiver 150 via propagation paths 170, 175, and 180.

[019] Simply speaking, the methods and systems described herein use the propagation paths 170, 175, and 180 as multiple parallel carriers of the communication signals. In most communications currently used in the art, these various propagation paths 170, 175, and 180 are usually considered to be problematic rather than being considered as a resource-bank.

[020] Using the method and systems described herein, however, the wireless connection between the transmitter 110 and the receiver 150 becomes analogous with multiple wired connections linking the two points. Using this configuration, many existing problems, e.g. the interference cancellation, capacity limitations, may be removed. The system and methods described herein are referred to as "user-focusing" and make use of multiple propagation paths 170, 175, and 180 between the transmitter 110 and receiver 150 as the parallel carriers. These paths are different in delay, direction of arrival, direction of departure and Doppler frequency. Along these paths, an electromagnetic wave may arrive at the receiver with different phases. However, in the user-focusing method and system described herein, the transmitted signal modulates the parallel carriers in such a way that

the wave arriving at the receiver 150 from different paths 170, 175, and 180 have the same phase, and may be superimposed coherently.

[021] The effect when using this user-focusing technique is that the system can send the signals directly to the location of the receiver 150, i.e. create a "focus" of the signal at the receiver 150. As may be understood by one of ordinary skill in the art, this system has various benefits, including but not limited to: 1) the total transmit power may decrease because the transmitter 110 wastes no energy on sending the signals to the regions where no paths exist; 2) the interference among users can be significantly reduced and consequently, the quality of service can be improved; 3) the currently used multi-point cooperative technologies might be unnecessary, as the methods and systems described herein provides acceptable performance using just one transmitter 110.

[022] Figure 2 illustrates two block diagram illustrating exemplary components of the transmitter 110 and the receiver 150 although the transmitter 110 and receiver 150 may include other components or omit any non-essential components without varying from the scope and meaning of the claims recited below. In this example, the receiver comprises a mobile station which includes a computing unit 200 which is capable of controlling the function of the other modules 200-250 of the mobile station, a display 210 capable of displaying on or more images on the mobile station, a speaker 220 including an electroacoustic transducer that produces sound in response to an electrical audio signal input, an antenna array 230 including one or more antennas which are used to send and receive signals with the transmitter 110, a user interface which enables a user of the mobile station to manipulate and interact with the processes of the computing unit 200 so as to control the various modules 200-250 of the mobile station, and a microphone 250 configured to capture an acoustic sound and convert it into an electronic signal using an acoustic-to-electric transducer or sensor.

[023] The transmitter 110, which includes a base station in this example, includes a computing unit 300 described more fully below and an antenna array 260 comprising one or more antenna which are used to send and receive signals with the receiver 150.

[024] Figure 3 depicts a block diagram illustrating an example computing device 300 of the transmitter 110 or receiver 150 that is arranged to implement the user-focusing technique for wireless communication described more fully below. In a very basic configuration 302, the computing device 300 typically includes one or more processors 304 and a system memory 306. A memory bus 308 may be used for communicating between processor 304 and system memory 306.

[025] Depending on the desired configuration, processor 304 may be of any type including but not limited to a microprocessor (μP), a microcontroller (μC), a digital signal processor (DSP), or any combination thereof. Processor 304 may include one more levels of caching, such as a level one cache 310 and a level two cache 312, a processor core 314, and registers 316. An example processor core 314 may include an arithmetic logic unit (ALU), a floating point unit (FPU), a digital signal processing core (DSP Core), or any combination thereof. An example memory controller 318 may also be used with processor 304, or in some implementations memory controller 318 may be an internal part of processor 304.

[026] Depending on the desired configuration, system memory 306 may be of any type including but not limited to volatile memory (such as RAM), non-volatile memory (such as ROM, flash memory, etc.) or any combination thereof. System memory 306 may include an operating system 320, one or more applications 322, and program data 324. Application 322 may include an authentication component or application 326 that is arranged or configured to construct an authentication system or authenticate one or more devices or users. Program data 324 may include authentication data 328 for constructing an authentication system and/or authenticating one or more devices or users. In some embodiments, application 322 may be arranged to operate with program data 324 on operating system 320 such that an authentication system is generated. This described basic configuration 302 is illustrated in Figure 3 by those components within the inner dashed line.

[027] Computing unit 300 may have additional features or functionality, and additional interfaces to facilitate communications between basic configuration 302 and any required devices and interfaces. For example, a bus/interface controller 330 may be used to facilitate communications between basic configuration 302 and one or more data storage devices 332 via a storage interface bus 334. Data storage devices 332 may be removable storage devices 336, non-removable storage devices 338, or a combination thereof. Examples of removable storage and non-removable storage devices include magnetic disk devices such as flexible disk drives and hard-disk drives (HDD), optical disk drives such as compact disk (CD) drives or digital versatile disk (DVD) drives, solid state drives (SSD), and tape drives to name a few. Example computer storage media may include volatile and nonvolatile, removable and non-removable media implemented in any method or technology for storage of information, such as computer readable instructions, data structures, program modules, or other data.

[028] System memory 306, removable storage devices 336 and non-removable storage devices 338 are examples of computer storage media. Computer storage media includes, but is not limited to, RAM, ROM, EEPROM, flash memory or other memory technology, CD-ROM, digital versatile disks (DVD) or other optical storage, magnetic cassettes, magnetic tape, magnetic disk storage or other magnetic storage devices, or any other medium which may be used to store the desired information and which may be accessed by computing device 300. Any such computer storage media may be part of computing device 300.

[029] Computing device 300 may also include an interface bus 340 for facilitating communication from various interface devices (e.g., output devices 342, peripheral interfaces 344, and communication devices 346) to basic configuration 302 via bus/interface controller 330. Example output devices 342 include a graphics processing unit 348 and an audio processing unit 360, which may be configured to communicate to various external devices such as a display or speakers via one or more A/V ports 362. Example peripheral interfaces 344 include a serial interface controller 364 or a parallel interface controller 366, which may be configured to communicate with external devices such as input devices (e.g., keyboard, mouse, pen, voice input device, touch input device, etc.) or other peripheral devices (e.g., printer, scanner, etc.) via one or more I/O ports 368. An example communication device 346 includes a network controller 360, which may be arranged to facilitate communications with one or more other computing devices 362 over a network communication link via one or more communication ports 364.

[030] The network communication link may be one example of a communication media. Communication media may typically be embodied by computer readable instructions, data structures, program modules, or other data in a modulated data signal, such as a carrier wave or other transport mechanism, and may include any information delivery media. A "modulated data signal" may be a signal that has one or more of its characteristics set or changed in such a manner as to encode information in the signal. By way of example, and not limitation, communication media may include wired media such as a wired network or direct-wired connection, and wireless media such as acoustic, radio frequency (RF), microwave, infrared (IR) and other wireless media. The term computer readable media as used herein may include both storage media and communication media.

[031] In addition to being a component of the transmitter 110 base station, the computing unit 300 may be implemented as a portion of a small-form factor portable (or mobile) electronic device such as a cell phone, a personal data assistant (PDA), a personal

media player device, a wireless web-watch device, a personal headset device, an application specific device, or a hybrid device that include any of the above functions. As such, the computing unit 200 of the receiver 150 configured as a mobile station may include the same or similar components as the computing device 300. Additionally, the computing device 300 may also be implemented as a personal computer including both laptop computer and non-laptop computer configurations.

[032] One skilled in the art will appreciate that, for this and other processes and methods disclosed herein, the functions performed in the processes and methods may be implemented in differing order. Furthermore, the outlined steps and operations are only provided as examples, and some of the steps and operations may be optional, combined into fewer steps and operations, or expanded into additional steps and operations without detracting from the essence of the disclosed embodiments.

[033] The foregoing detailed description has set forth various embodiments of the devices and/or processes via the use of block diagrams, flowcharts, and/or examples. Insofar as such block diagrams, flowcharts, and/or examples contain one or more functions and/or operations, it will be understood by those within the art that each function and/or operation within such block diagrams, flowcharts, or examples can be implemented, individually and/or collectively, by a wide range of hardware, software, firmware, or virtually any combination thereof. In one embodiment, several portions of the subject matter described herein may be implemented via Application Specific Integrated Circuits (ASICs), Field Programmable Gate Arrays (FPGAs), digital signal processors (DSPs), or other integrated formats. However, those skilled in the art will recognize that some aspects of the embodiments disclosed herein, in whole or in part, can be equivalently implemented in integrated circuits, as one or more computer programs running on one or more computers (e.g., as one or more programs running on one or more computer systems), as one or more programs running on one or more processors (e.g., as one or more programs running on one or more microprocessors), as firmware, or as virtually any combination thereof, and that designing the circuitry and/or writing the code for the software and or firmware would be well within the skill of one of skill in the art in light of this disclosure. In addition, those skilled in the art will appreciate that the mechanisms of the subject matter described herein are capable of being distributed as a program product in a variety of forms, and that an illustrative embodiment of the subject matter described herein applies regardless of the particular type of signal bearing medium used to actually carry out the distribution. Examples of a signal bearing medium include,

but are not limited to, the following: a recordable type medium such as a floppy disk, a hard disk drive, a CD, a DVD, a digital tape, a computer memory, etc.; and a transmission type medium such as a digital and/or an analog communication medium (e.g., a fiber optic cable, a waveguide, a wired communications link, a wireless communication link, etc.).

[034] Those skilled in the art will recognize that it is common within the art to describe devices and/or processes in the fashion set forth herein, and thereafter use engineering practices to integrate such described devices and/or processes into data processing systems. That is, at least a portion of the devices and/or processes described herein can be integrated into a data processing system via a reasonable amount of experimentation. Those having skill in the art will recognize that a typical data processing system generally includes one or more of a system unit housing, a video display device, a memory such as volatile and non-volatile memory, processors such as microprocessors and digital signal processors, computational entities such as operating systems, drivers, graphical user interfaces, and applications programs, one or more interaction devices, such as a touch pad or screen, and/or control systems including feedback loops and control motors (e.g., feedback for sensing position and/or velocity; control motors for moving and/or adjusting components and/or quantities). A typical data processing system may be implemented utilizing any suitable commercially available components, such as those typically found in data computing/communication and/or network computing/communication systems.

[035] The herein described subject matter sometimes illustrates different components contained within, or connected with, different other components. It is to be understood that such depicted architectures are merely exemplary, and that in fact many other architectures can be implemented which achieve the same functionality. In a conceptual sense, any arrangement of components to achieve the same functionality is effectively "associated" such that the desired functionality is achieved. Hence, any two components herein combined to achieve a particular functionality can be seen as "associated with" each other such that the desired functionality is achieved, irrespective of architectures or intermedial components. Likewise, any two components so associated can also be viewed as being "operably connected", or "operably coupled", to each other to achieve the desired functionality, and any two components capable of being so associated can also be viewed as being "operably couplable", to each other to achieve the desired functionality. Specific examples of operably couplable include but are not limited to physically mateable and/or physically interacting components and/or wirelessly interactable and/or

wirelessly interacting components and/or logically interacting and/or logically interactable components.

[036] Returning to Figure 1, as understood by one of ordinary skill in the art, the impulse response of the propagation channel can be viewed as the superposition of multiple specular propagation paths 170, 175, and 180 between a transmitter 110 and a receiver 150 .

[037] As previously described with reference to Figure 1, there are multiple propagation paths 170, 175, and 180 between the transmitter 110 and the receiver 150 wherein the signal, comprising an electromagnetic wave may bounce off the various buildings or bouncing points 120-124. The interactions between the electromagnetic wave and the bouncing points 120-124 can be reflection, diffraction or scattering. The signals radiated from the transmitter 110 experience different distortions along these propagation paths 170, 175, and 180. The resulting multiple replica of the original transmitted signals are added at the receiver 150, either destructively or constructively.

[038] Typically, equalization techniques known in the art are used in the receivers 150 to recover the original transmitted signal by removing the distortions. After the impact of channel is perfectly equalized, the signals arriving at the receiver 150 from different propagation paths 170, 175, and 180 are "aligned" in phases and added constructively.

[039] Typical examples of equalization techniques include: 1) the RAKE receiving technique, which equalizes the channel in the delay domain; 2) the frequency equalization technique, widely adopted in the receivers based on OFDM transmission; and 3) the time-frequency equalization technique used in the receivers of 4G systems, such as the TD-LTE (Long-Term-Evolution) wireless communication systems.

[040] As described more fully below with reference to Figure 4, unlike the equalization technique which corrects the distortion at the receiver 150 after receiving the signals, the user-focusing technique adds pseudo "distortion" before the signals are transmitted at the transmitter 110. These "pre-distorted" signals are then transmitted in such a way that the signal distortion can be successfully removed while propagating.

[041] More specifically, as shown in Figure 4, the method begins at 410 where a channel estimation of a first signal is performed so as to obtain path parameter information of the propagation path 170, 175, or 180. During this process, a transmitter transmits 420 a first signal from the transmitter 110 to the receiver 150. In one embodiment the first signal comprises distorted preambles or training sequences transmitted from the transmitter 110. After the first signal is received 430 at the receiver

150, a channel estimation algorithm is performed to obtain the estimates of the delay τ, the Doppler frequency υ, direction of arrival Ω_1, direction of departure Ω_2, and complex amplitude α for each of the propagation paths 170, 175, and 180.

[042] Various channel estimations may be used, including the SAGE algorithm. Other algorithms for estimating the parameters include Maximum likelihood estimation algorithms including the specular-path-based maximum likelihood method. One drawback of the maximum likelihood algorithm, however is that it results in high complexity in many instances. However, when the generic model is correctly chosen, the obtained parameter estimates have higher accuracy than those obtained by using other methods.

[043] Other examples of channel estimations which may be used include Spectral-based methods, including the Bartlett beamformer, the Capon beamformer, and the MUSIC (MUltiple SIgnal Classification) method. These methods are used to compute the power spectrum of the channel in multiple dimensions, e.g. in the delay, Doppler frequency and directions. These methods can return estimates of the path parameters with low complexity. They are practical and much more appropriate for real implementation than the maximum-likelihood based estimation methods.

[044] Still another channel estimation algorithm which may be used in association with the non-spectral-based method are Subspace-based techniques, such as the root-MUSIC technique, and the ESPRIT (Estimation of Signal Parameters based on Rotational-Invariance Technique) algorithm, as well as the extension of these algorithms, e.g. Propagator method and Unitary-ESPRIT technique. These algorithms have high accuracy, but because the input of these algorithms are the observations of channel from multiple independent snapshots in order to avoid the singularity issue of the covariance matrix of received signals, data must be collected from multiple frames in a relatively long time window.

[045] Approximation of the maximum-likelihood method based on iterative schemes may also be used at step 410. These algorithms include the expectation-maximization (EM) method, the space-alternating generalized Expectation-maximization (SAGE) technique and the so-called RiMAX (Richter's maximum likelihood estimation) method.

[046] Alternatively, methods based on LSE (least-square-error) principles, such as the LMMSEE (Least minimum mean squared estimation error) estimator, and the covariance matrix fitting technique may also be used.

[047] Furthermore, new algorithms for estimating path parameters, which probably have not been disclosed, can also be used in our case. For example, the maximum-a-posterior based methods, the Bayesian techniques, might also be considered as important elements in the pre-distorting technique. Additionally, besides the estimation techniques, tracking algorithms may be used to get the estimates of path parameters, such as the Kalman filtering technique, the enhanced Kalman filtering technique, the particle filtering technique, the particle-filter based SAGE algorithm, etc.

[048] Next, at 440 the receiver 150 feedbacks these path parameter information to the transmitter 110 via the propagation path 170, 175, or 180. This feedback operation can be performed according to the existing protocols in wireless communication systems.

[049] Then, at 450 for the next frame or block to transmit, the transmitter "pre-distorts" a second signal and generates multiple signal replica with appropriate settings of the transmitting time, transmitting pace and directions, receiving directions and complex weight of the signal. These settings are determined by the parameters of paths fed-back from the receiver at 440. These distorted replica are summed up and transmitted 460 from the transmitter 110 to the receiver 150. The signal is then received 470 at the receiver 150.

[050] In order to illustrate method and by way of example, the two propagation paths 170 and 180 of Figure 1 may be compared. The two paths 170 and 180 each exhibit different delays (because of the different path lengths), different directions of departure and of arrival (due to the different locations of the scatterers 120 and 122) and distinctive Doppler frequency (due to the movement of the receiver 150 and the different constellation of the paths).

[051] In this example, $(\Omega_{i,1},\Omega_{i,2},\upsilon_i,\tau_i)$ correspond to the direction of departure, direction of arrival, delay, and Doppler frequency of path 170 and 180, respectively, where path 170 corresponds to i=1 and path 180 corresponds to i=2. In the instance where there are M antennas in the antenna array 260 of the transmitter 110 and N antennas in the antenna array 230 of the receiver 150, a $M \times N$ replica of the transmitted signal is created at step 450 using the path parameter information sent to the transmitter 110 at 450 such that:

[052] $\alpha_i^* \exp(-j2\pi(f-\nu_i)\tau_i)\mathbf{c}_{Tx}^*(\Omega_{1,i}) \otimes \mathbf{c}_{Rx}^*(\Omega_{1,i})u(f)$, for i=1,2,

[053] Where $\mathbf{c}_{Tx}^*(\Omega_1)$ denotes the complex conjugate of the transmitter antenna array 260 response at the direction Ω_1, $\mathbf{c}_{Rx}^*(\Omega_1)$ denotes the complex conjugate of the receiver antenna array 230 response at the direction Ω_2, $u(f)$ represents the transmitted signal

represented in the frequency domain, * represents the complex conjugate, and ⊗ denotes Kronecker product. Notice that $\mathbf{c}_{Tx}^{*}(\Omega_1)$ and $\mathbf{c}_{Rx}^{*}(\Omega_i)$ are M x 1 and N x 1 column vectors, respectively. Then the combined signal *x(f)* is calculated by summing up the $M \times N$ signal replica. After that, the inverse Fourier transformation is applied to obtain the representation of *x(t)* in time domain, i.e.

[054] $x(t) = F^{-1}[x(f)]$,

[055] where F^{-1} denotes the inverse Fourier transformation.

[056] As described more fully below, one benefit of the method and systems described herein is that a conventional equalization process in the conventional receiver is not needed anymore, because the pre-distortion can be removed automatically by the propagation channel, i.e. the channel itself works as an equalizer. The signals propagating along different paths are completely aligned with the same phase when they arrive at the receiver 150, and thus, can be added constructively. The received signal in baseband representation can be directly sent to the demodulation block for further processing.

[057] One aspect of the method is that the training sequence is not "pre-distorted." This is because the receiver 150 requires that the training sequence be distorted by propagation in order to estimate the parameters of the propagation paths.

[058] As may be understood by one of skill in the art, the use-focusing technique can be tailored to suffice different application purposes. Whether these parameters may be advantageous can depend on the objective of introducing the user-focusing technique. For example, the information of the delays of individual paths is required when the user-focusing is used to synchronize the transmission through different paths in frequency domains. Similarly the Doppler frequency is required when the synchronization is demanded in the time domain; the directions of departure are required when the signals are to be aligned in the input of multiple antennas in the transmitter side; the directions of arrival can be used when synchronization is performed at the output of the multiple antennas in the receiver side. Hence, depending on the requirements of the system, more or fewer parameters may be used in order to perform the pre-distorting described above, and the use of the parameters described herein may be modified without departing from the scope of the disclosure.

[059] Furthermore, it is possible to make use of new parameters for achieving more levels of user-focusing. For example, the polarization status of the propagation path can

be used to achieve polarization synchronization, which leads to a new application of the user-focusing technique, i.e. focusing on specific users in polarization domains.

[060] Alternatively, the parameters regarding the system responses, rather than the propagation channels may be used. When multiple systems are used to make a focus on the same user, it may be beneficial to include the characteristics of these systems, in order to remove the impact of the systems. These parameters regarding the system response can be the excess processing delay time, phase noises, etc.

[061] Figures 5A-5C illustrate comparisons of the embodiments described herein to a conventional communication chain.

[062] Figure 5A depicts the modification that can be implemented in the conventional communication system when the user-focusing technique is applied. In the conventional configuration, the transmitter 500 includes modulation blocks 510 a RF front end 520 and antennas 505a and 505b. The receiver 550 includes a RF front end 530 a channel estimation module 535, antennas 545a and 545b and a channel equalization module 540.

[063] By way of comparison, Figure 5B illustrates the transmitter 575 and receiver 580 according to the technology described herein. As described above, because the embodiments described herein utilize a pre-distortion technique performed in a modulation and pre-distortion block of the transmitter 575, there is no need for the channel equalization block 540, as required in receiver 550.

[064] In another embodiment shown Figure 5C, the receiver 550 may be used to perform channel equalization in addition to the transmitter performing pre-distortion using a modulation and pre-distortion block 560.

[065] In the following, we compare the user-focusing technique described herein with the other conventional techniques currently known to one of ordinary skill in the art. As may be understood, the methods and systems described herein offer benefits not currently available using the configurations currently known to one of ordinary skill in the art.

A. Comparison to the Coherent-Combination in the Joint-Processing Technique Proposed for the CoMP System Specified in 3GPP.

[066] For the future generation wireless communications, such as the LTE-Advanced systems, coordinated multiple-point (CoMP) transmission techniques will be used to improve the coverage of high-data rate in the cell edge. One of the technique used by CoMP is the "joint processing (JP)". In the 3GPP technical standard, the word "coherent adding" is used to indicate that the signals originated by different transmitters are combined constructively in the receiver. In our opinion, this "coherent adding" is an

extension of the standard channel equalization techniques used in single link wireless communication to the multi-link scenario, i.e. the impact of the channels between the multiple transmitters and the receiver should be removed by equalization.

[067] This channel equalization process is different from the principle of the user-focusing technique described herein, which pre-distorts the transmitted signals in such a way that the channel's effect is automatically equalized during the propagation. Furthermore, as described with Figure 5C above, it is possible to utilize the user-focusing technique in the CoMP scenario, where every transmitter 575 uses the user-focusing technique to transmit pre-distorted signals while a separate channel equalization process is performed at the receiver 550.

[068] As such, it is possible to use both equalization technique and pre-distorted technique at in the same system. As explained before, the equalization technique is used in the receiver 150, while the pre-distortion is applied in the transmitter 110. When the pre-distorted technique is used, the complexity of the equalization may be significantly reduced in the receiver 150.

[069] For example, in an instance where the receiver 150 is moving at the speed of 350km/h, the channel equalization block 540 of the receiver, such as the GSM terminals, is normally only able to support the communication when the moving speed is up to 200km/h. So when the user terminal moves beyond 200km/h, the communications become highly unstable. In order to maintain communication without significantly modifying the receiver 150, the user-focusing technique described herein may be implemented in the transmitter 110 by pre-distorting the signals in such a way that the signal received in the receiver 150 is similar with those observed when the user equipment moves at the speed below 200km/h. So in this example, the equalization and pre-distortion techniques may be jointly used. Thus, the ability to distribute the complexity of coping channels in harsh conditions.

[070] In another example, the receiver 150 may be configured as a part of a standard mobile phone where equalization is used, but where the mobile terminal is equipped with a single antenna, rather than multiple antennas, preventing its ability to do spatial equalization. However, the channel around the mobile terminal is still directive, meaning that the impinging waves exhibit different directions of arrival or directions of departure. The user-focusing technique may then be used to enforce the signals coming from different directions towards the receiver 150 to "focus" on the receiver 150. Assuming that the transmitter 110 has multiple antennas in its antenna array 260, and that the

transmitter 110 knows the directions of departure of certain propagation paths 170, 175, and 180 between the transmitter 110 and the receiver 150, the pre-distortion is added in the transmitter 110 to remove the selectivity in the space in proximity of the transmitter 110. This operation, although not completely removing the spatial selectivity, can mitigate the impact of the multipath on the receiver 150.

[071] In summary, depending on the capability of the transmitter 110 and the receiver 150 in the communication system, the pre-distortion and equalization can be implemented in different domains and be used at the same time.

B. Comparison to Precoding Techniques

[072] The systems and methods described herein can make use of the concept of "pre-distortion," which has significant difference from the conventional precoding techniques. The latter can make use of simplified representations of channel, e.g. in terms of code-book, while the system and methods described above make use of the parameters of the propagation channel, e.g. the delay, Doppler frequencies, directions of departure and directions of arrival. This full-dimensional parametric description of the channel can be much more accurate than using the codebooks. Furthermore, only by using the precise channel parameters, synchronization of the signals to form a "focus" on specific user can be possible. The conventional precoding techniques cannot be used to create a concentration of the signal at a certain point (which can move) in space.

C. Comparison to the SDMA Technique

[073] The smart antenna of the SDMA (spatial division multiplexing address) technique can make use of SDMA technique to direct the beam to the certain directions. However, in SDMA, there is no concept of pre-distortion of the signals in time, frequency and space domains, as described above. Furthermore, embodiments described herein require that the propagation paths be differentiable in the directions, and also in the delay, Doppler frequency. By conducting the pre-distortion in time, frequency and space jointly, the method described above is able to create a focus of the signal following a moving point in an environment with multi-path richness.

D. Comparison to the Multipath-Based Channel Simulation Technique

[074] The geometrical stochastic channel models (GSCM) are widely used for simulating the propagation channel when performing conformity test for e.g. the IMT-Advanced systems. In these models, multiple paths characterized by delay, Doppler, directions and polarizations are added to reproduce the time-variant channels. While the user-focusing system and methods described herein utilize multiple propagation paths, the

concept of per-path-modulation and the pre-distortion method are different from the method used the GSCM-based channel simulation.

E. Comparison to Pre-Equalization Techniques

[075] The user-focusing system and methods described herein pre-distort transmitted signals in 3 dimensions, i.e. time, frequency and spatial domains. Furthermore, it can be beneficial to point out that the parameters considered for pre-distorting are delays, Doppler frequencies and directions of arrival and of departure of multiple propagation paths, rather than the "taps", allowing for counteracting the phase drifting in time, frequency and space samples.

[076] Furthermore, the pre-equalization techniques usually rely on the structure of finite impulse response (FIR) filter, while the user-focusing systems and methods described herein use individual propagation path without requiring a finite impulse response. Additionally, while the pre-equalization technique aims at removing the inter-symbol-interferences (ISI) in the frequency and spatial domains, the user-focusing systems and methods remove the ISI in time, frequency and spatial domains. This enables the user-focusing technique to be performed in time-variant cases in environments with rapidly changing channels, while the pre-equalization technique is only applicable in the fixed wireless, wireless local loop systems.

[077] The user-focusing technique can be used in conventional wireless communication systems, future generation of wireless communication systems, such as the Long-Term-evolution (LTE)-Advanced, the ad-hoc wireless network, e.g. the vehicular wireless networks, as well as in the contexts of non-communication applications, such as power transferring, no-harm operation, and sensor networks. So it is valuable to the equipment manufacturers, designers, research and developing companies in these areas.

[078] In addition to the embodiments described above, the methods described herein can be applied to a variety of existing communications systems. By way of illustration, the following are examples of scenarios where the user-focusing technique described above may be used:

[079] Example 1: Communications systems including single transmitter and single receiver MIMO scenarios. The user-focusing technique can be used in the system with one transmitter and one receiver. Compared with the systems without the user-focusing technique, the new system can support higher throughput, and may work more stably in the environments with poor channels.

[080] Example 2: Communication systems including multiple transmitter and single receiver SISO (single-input single-output) scenarios. The user-focusing technique can be implemented in the transmitter side. When the transmitters are synchronized in time and frequencies, the transmitters can coordinate in such a way that the signals coming from difference transmitters will not exhibit transmitting selectivity. This can help build e.g. the Coordinated Multiple-Point (CoMP) systems.

[081] Example 3: Communication systems including multiple transmitter and multiple receiver SISO scenarios. When multiple receivers are present in the network, the user-focusing technique can also be implemented when the channels among the transmitter and the receivers are known.

[082] Example 4: Communication systems including multiple transmitter and multiple receiver MIMO scenarios. The user-focusing technique can utilize the directional channel properties when the MIMO configuration is considered.

[083] Example 5: Broadcasting scenarios with known channels between the broadcasting station and the receiver.

[084] Example 6: Broadcasting with multiple base stations in a single network.

[085] Example 7: Remote sensing. The user-focusing technique allows the electromagnetic waves to focus on certain point, which might be stationary or moving, in the 3-D or even 4-D, when time is considered as an additional dimension. This feature makes the technique applicable to monitor the changes at specific locations in real environments.

[086] Example 8: Remote charging. The user-focusing technique can concentrate the energy transmitted at specific receiving location. When there is certain equipment located at specific places, the transmitter can use multiple channels to transfer the energy to the equipment. The energy in the electromagnetic field focused on specific points can be transferred to other kinds of energy in desired forms, such as thermal and electric energy, thus making operations, e.g. remote charging, possible.

[087] The above mentioned applications are all based on combining the user-focusing technique with existing systems. The advantages of the systems augmented with user-focusing functions are the increased energy-usage-efficiency, better and robust performance. Furthermore, for communications systems, if the user-focusing technique is used, the cost of constructing a system might be reduced since deploying base stations can be done in a more flexible way. This is owing to the inherent property of the user-

focusing technique, i.e. the resources in the environment are fully exploited for achieving specific goals.

[088] Hence, the user-focusing methods and systems described herein have various advantages including removal of the fast fading effect of the signals by compensating the delays, Doppler frequencies, direction of arrival and direction of departure of the propagation paths. This can significantly reduce the burden of developing advanced receivers in communication systems.

[089] Additionally, the systems and methods described herein make use of the parameters of propagation instead of the simplified channel status information, and thus, the focus resulted can be highly concentrated. The interference cancellation is much more efficient by using the user-focusing than the conventional methods relying on e.g. the precoding techniques.

[090] Furthermore, the user-focusing technique can be generalized and used for many purposes other than wireless communications, such as wireless power transferring to specific points, wireless charging of battery at remote positions, and accurate point-point wireless connection in the area where the users are very dense.

[091] Also, the methods and systems described herein save power, as the transmission is conducted in a very efficient manner. No energy is wasted on non-existing propagation paths.

[092] Finally, the systems and methods described herein are easily implemented because the modification is mainly including the pre-distortion function in the transmitter side. With respect to the use of substantially any plural and/or singular terms herein, those having skill in the art can translate from the plural to the singular and/or from the singular to the plural as is appropriate to the context and/or application. The various singular/plural permutations may be expressly set forth herein for sake of clarity.

[093] In an illustrative embodiment, any of the operations, processes, etc. described herein can be implemented as computer-readable instructions stored on a computer-readable medium. The computer-readable instructions can be executed by a processor of a mobile unit, a network element, and/or any other computing device.

[094] There is little distinction left between hardware and software implementations of aspects of systems; the use of hardware or software is generally (but not always, in that in certain contexts the choice between hardware and software can become significant) a design choice representing cost vs. efficiency tradeoffs. There are various vehicles by which processes and/or systems and/or other technologies described herein can be

effected (e.g., hardware, software, and/or firmware), and that the preferred vehicle will vary with the context in which the processes and/or systems and/or other technologies are deployed. For example, if an implementer determines that speed and accuracy are paramount, the implementer may opt for a mainly hardware and/or firmware vehicle; if flexibility is paramount, the implementer may opt for a mainly software implementation; or, yet again alternatively, the implementer may opt for some combination of hardware, software, and/or firmware. The modules recited herein can include hardware and/or software.

[095] The present disclosure is not to be limited in terms of the particular embodiments described in this application, which are intended as illustrations of various aspects. Many modifications and variations can be made without departing from its spirit and scope, as will be apparent to those skilled in the art. Functionally equivalent methods and apparatuses within the scope of the disclosure, in addition to those enumerated herein, will be apparent to those skilled in the art from the foregoing descriptions. Such modifications and variations are intended to fall within the scope of the appended claims. The present disclosure is to be limited only by the terms of the appended claims, along with the full scope of equivalents to which such claims are entitled. It is also to be understood that the terminology used herein is for the purpose of describing particular embodiments only, and is not intended to be limiting.

[096] With respect to the use of substantially any plural and/or singular terms herein, those having skill in the art can translate from the plural to the singular and/or from the singular to the plural as is appropriate to the context and/or application. The various singular/plural permutations may be expressly set forth herein for sake of clarity.

[097] It will be understood by those within the art that, in general, terms used herein, and especially in the appended claims (e.g., bodies of the appended claims) are generally intended as “open” terms (e.g., the term “including” should be interpreted as “including but not limited to,” the term “having” should be interpreted as “having at least,” the term “includes” should be interpreted as “includes but is not limited to,” etc.). It will be further understood by those within the art that if a specific number of an introduced claim recitation is intended, such an intent will be explicitly recited in the claim, and in the absence of such recitation no such intent is present. For example, as an aid to understanding, the following appended claims may contain usage of the introductory phrases "at least one" and "one or more" to introduce claim recitations. However, the use of such phrases should not be construed to imply that the introduction of a claim

recitation by the indefinite articles "a" or "an" limits any particular claim containing such introduced claim recitation to embodiments containing only one such recitation, even when the same claim includes the introductory phrases "one or more" or "at least one" and indefinite articles such as "a" or "an" (e.g., "a" and/or "an" should be interpreted to mean "at least one" or "one or more"); the same holds true for the use of definite articles used to introduce claim recitations. In addition, even if a specific number of an introduced claim recitation is explicitly recited, those skilled in the art will recognize that such recitation should be interpreted to mean at least the recited number (e.g., the bare recitation of "two recitations," without other modifiers, means at least two recitations, or two or more recitations). Furthermore, in those instances where a convention analogous to "at least one of A, B, and C, etc." is used, in general such a construction is intended in the sense one having skill in the art would understand the convention (e.g., " a system having at least one of A, B, and C" would include but not be limited to systems that have A alone, B alone, C alone, A and B together, A and C together, B and C together, and/or A, B, and C together, etc.). In those instances where a convention analogous to "at least one of A, B, or C, etc." is used, in general such a construction is intended in the sense one having skill in the art would understand the convention (e.g., " a system having at least one of A, B, or C" would include but not be limited to systems that have A alone, B alone, C alone, A and B together, A and C together, B and C together, and/or A, B, and C together, etc.). It will be further understood by those within the art that virtually any disjunctive word and/or phrase presenting two or more alternative terms, whether in the description, claims, or drawings, should be understood to contemplate the possibilities of including one of the terms, either of the terms, or both terms. For example, the phrase "A or B" will be understood to include the possibilities of "A" or "B" or "A and B."

[098] In addition, where features or aspects of the disclosure are described in terms of Markush groups, those skilled in the art will recognize that the disclosure is also thereby described in terms of any individual member or subgroup of members of the Markush group.

[099] As will be understood by one skilled in the art, for any and all purposes, such as in terms of providing a written description, all ranges disclosed herein also encompass any and all possible subranges and combinations of subranges thereof. Any listed range can be easily recognized as sufficiently describing and enabling the same range being broken down into at least equal halves, thirds, quarters, fifths, tenths, etc. As a non-limiting example, each range discussed herein can be readily broken down into a lower third,

middle third and upper third, etc. As will also be understood by one skilled in the art all language such as "up to," "at least," and the like include the number recited and refer to ranges which can be subsequently broken down into subranges as discussed above. Finally, as will be understood by one skilled in the art, a range includes each individual member. Thus, for example, a group having 1-3 cells refers to groups having 1, 2, or 3 cells. Similarly, a group having 1-5 cells refers to groups having 1, 2, 3, 4, or 5 cells, and so forth.

[0100] From the foregoing, it will be appreciated that various embodiments of the present disclosure have been described herein for purposes of illustration, and that various modifications may be made without departing from the scope and spirit of the present disclosure. Accordingly, the various embodiments disclosed herein are not intended to be limiting, with the true scope and spirit being indicated by the following claims. All references recited herein are incorporated herein by specific reference in their entirety.

(12) INTERNATIONAL APPLICATION PUBLISHED UNDER THE PATENT COOPERATION TREATY (PCT)

(19) World Intellectual Property Organization
International Bureau

(43) International Publication Date
31 January 2013 (31.01.2013)

WIPO | PCT

(10) International Publication Number
WO 2013/013407 A1

(51) International Patent Classification: *H04L 1/12* (2006.01)

(21) International Application Number: PCT/CN2011/077718

(22) International Filing Date: 28 July 2011 (28.07.2011)

(25) Filing Language: English

(26) Publication Language: English

(71) Applicant *(for all designated States except US)*: **EMPIRE TECHNOLOGY DEVELOPMENT LLC** [US/US]; 2711 Centerville Road, Suite 400, Wilmington, Delaware 19808 (US).

(72) Inventor; and
(75) Inventor/Applicant *(for US only)*: **YIN, Xuefeng** [CN/CN]; No. 77 Tong Ji Xin Cun, Zhang Wu Lu, Yangpu District, Shanghai 200092 (CN).

(74) Agent: **KING & WOOD MALLESONS**; 20th Floor, East Tower, World Financial Centre, No.1 Dongsanhuan Zhonglu, Chaoyang District, Beijing 100020 (CN).

(81) Designated States *(unless otherwise indicated, for every kind of national protection available)*: AE, AG, AL, AM, AO, AT, AU, AZ, BA, BB, BG, BH, BR, BW, BY, BZ, CA, CH, CL, CN, CO, CR, CU, CZ, DE, DK, DM, DO, DZ, EC, EE, EG, ES, FI, GB, GD, GE, GH, GM, GT, HN, HR, HU, ID, IL, IN, IS, JP, KE, KG, KM, KN, KP, KR, KZ, LA, LC, LK, LR, LS, LT, LU, LY, MA, MD, ME, MG, MK, MN, MW, MX, MY, MZ, NA, NG, NI, NO, NZ, OM, PE, PG, PH, PL, PT, RO, RS, RU, SC, SD, SE, SG, SK, SL, SM, ST, SV, SY, TH, TJ, TM, TN, TR, TT, TZ, UA, UG, US, UZ, VC, VN, ZA, ZM, ZW.

(84) Designated States *(unless otherwise indicated, for every kind of regional protection available)*: ARIPO (BW, GH, GM, KE, LR, LS, MW, MZ, NA, SD, SL, SZ, TZ, UG, ZM, ZW), Eurasian (AM, AZ, BY, KG, KZ, MD, RU, TJ, TM), European (AL, AT, BE, BG, CH, CY, CZ, DE, DK, EE, ES, FI, FR, GB, GR, HR, HU, IE, IS, IT, LT, LU, LV, MC, MK, MT, NL, NO, PL, PT, RO, RS, SE, SI, SK, SM,

[Continued on next page]

(54) Title: USER-FOCUSING TECHNIQUE FOR WIRELESS COMMUNICATION SYSTEMS

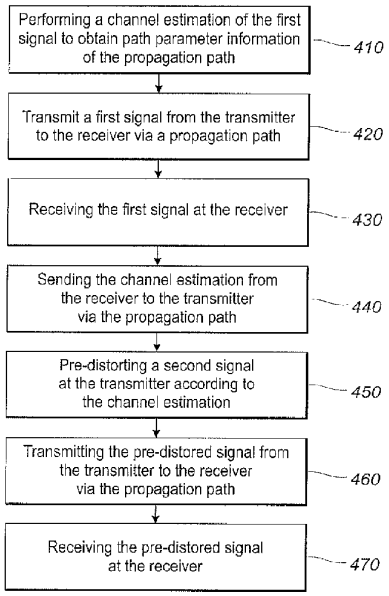

FIG. 4

(57) Abstract: The present invention discloses a system and method for wireless communication. The system includes a transmitter, a receiver, and a plurality of propagation paths formed between the transmitter and the receiver which are capable of carrying a signal transmitted by the transmitter to the receiver. The method includes transmitting a first signal from the transmitter to the receiver via a propagation path of the plurality of propagation paths, receiving the first signal at the receiver, performing a channel estimation of the first signal to obtain path parameter information of the propagation path, sending the channel estimation from the receiver to the transmitter via the propagation path, predistorting a second signal at the transmitter according to the channel estimation, transmitting the predistorted signal from the transmitter to the receiver via the propagation path, and receiving the predistorted signal at the receiver.

WO 2013/013407 A1

TR), OAPI (BF, BJ, CF, CG, CI, CM, GA, GN, GQ, GW, ML, MR, NE, SN, TD, TG).

Published:

— *with international search report (Art. 21(3))*

PATENT COOPERATION TREATY

PCT

INTERNATIONAL PRELIMINARY REPORT ON PATENTABILITY
(Chapter I of the Patent Cooperation Treaty)

(PCT Rule 44*bis*)

Applicant's or agent's file reference EIE110161PCT	**FOR FURTHER ACTION**	See item 4 below
International application No. PCT/CN2011/077718	International filing date *(day/month/year)* 28 July 2011 (28.07.2011)	Priority date *(day/month/year)*
International Patent Classification (8th edition unless older edition indicated) See relevant information in Form PCT/ISA/237		
Applicant EMPIRE TECHNOLOGY DEVELOPMENT LLC		

1. This international preliminary report on patentability (Chapter I) is issued by the International Bureau on behalf of the International Searching Authority under Rule 44 *bis*.1(a).

2. This REPORT consists of a total of 8 sheets, including this cover sheet.

   In the attached sheets, any reference to the written opinion of the International Searching Authority should be read as a reference to the international preliminary report on patentability (Chapter I) instead.

3. This report contains indications relating to the following items:

☒	Box No. I	Basis of the report
☐	Box No. II	Priority
☐	Box No. III	Non-establishment of opinion with regard to novelty, inventive step and industrial applicability
☐	Box No. IV	Lack of unity of invention
☒	Box No. V	Reasoned statement under Article 35(2) with regard to novelty, inventive step or industrial applicability; citations and explanations supporting such statement
☐	Box No. VI	Certain documents cited
☐	Box No. VII	Certain defects in the international application
☐	Box No. VIII	Certain observations on the international application

4. The International Bureau will communicate this report to designated Offices in accordance with Rules 44*bis*.3(c) and 93*bis*.1 but not, except where the applicant makes an express request under Article 23(2), before the expiration of 30 months from the priority date (Rule 44*bis* .2).

	Date of issuance of this report 28 January 2014 (28.01.2014)
The International Bureau of WIPO 34, chemin des Colombettes 1211 Geneva 20, Switzerland Facsimile No. +41 22 338 82 70	Authorized officer Lingfei Bai e-mail: pt02.pct@wipo.int

Form PCT/IB/373 (January 2004)

PATENT COOPERATION TREATY

From the INTERNATIONAL SEARCHING AUTHORITY

To:

100020

20st Floor,East Tower,World Financial Centre,1 Dongsanhuan Zhonglu,Chaoyang District,100020,Beijing CHINA

KING & WOOD MALLESONS LAWYERS

Maohua Wang

PCT

WRITTEN OPINION OF THE INTERNATIONAL SEARCHING AUTHORITY

(PCT Rule 43 *bis*.1)

Date of mailing (*day/month/year*)	03 May 2012 (03.05.2012)
Applicant's or agent's file reference: EIE110161PCT	**FOR FURTHER ACTION** See paragraph 2 below

International application No.	International filing date(*day/month/year*)	Priority date (*day/month/year*)
PCT/CN2011/077718	28 Jul. 2011(28.07.2011)	

International Patent Classification (IPC) or both national classification and IPC

H04L1/12(2006.01)i

Applicant

EMPIRE TECHNOLOGY DEVELOPMENT LLC et al.

1. This opinion contains indications relating to the following items:

- ☒ Box No. I Basis of the opinion
- ☐ Box No.II Priority
- ☐ Box No. III Non-establishment of opinion with regard to novelty, inventive step and industrial applicability
- ☐ Box No. IV Lack of unity of invention
- ☒ Box No. V Reasoned statement under Rule 43*bis*.1(a)(i) with regard to novelty, inventive step or industrial applicability; citations and explanations supporting such statement
- ☐ Box No.VI Certain documents cited
- ☐ Box No. VII Certain defects in the international application
- ☐ Box No.VIII Certain observations on the international application

2. **FURTHER ACTION**

If a demand for international preliminary examination is made, this opinion will be considered to be a written opinion of the International Preliminary Examining Authority ("IPEA") except that this does not apply where the applicant chooses an Authority other than this one to be the IPEA and the chosen IPEA has notified the International Bureau under Rule 66.1*bis*(b) that written opinions of this International Searching Authority will not be so considered.

If this opinion is, as provided above, considered to be a written opinion of the IPEA, the applicant is invited to submit to the IPEA a written reply together, where appropriate, with amendments, before the expiration of **3** months from the date of mailing of Form PCT/ISA/220 or before the expiration of **22** months from the priority date, whichever expires later.

For further options, see Form PCT/ISA/220.

3. For further details, see notes to Form PCT/ISA/220.

Name and mailing address of the ISA/CN	Date of completion of this opinion	Authorized officer
The State Intellectual Property Office, the P.R.China 6 Xitucheng Rd., Jimen Bridge, Haidian District, Beijing, China 100088 Facsimile No. 86-10-62019451	26 Apr. 2012 (26.04.2012)	CHEN, Shaobei Telephone No. (86-10)62411319

Form PCT/ISA/237(cover sheet)(July 2009)

WRITTEN OPINION OF THE INTERNATIONAL SEARCHING AUTHORITY

International application No.
PCT/CN2011/077718

Box No. I Basis of the opinion

1. With regard to the **language**, this opinion has been established on the basis of:

   ☒ the international application in the language in which it was filed.
   ☐ a translation of the international application into _____ , which is the language of a translation furnished for the purposes of international search (Rules 12.3(a) and 23.1(b)).

2. ☐ This opinion has been established taking into account the **rectification of an obvious mistake** authorized by or notified to this Authority under Rule 91(Rule 43bis.1(a))

3. With regard to any **nucleotide and/or amino acid sequence** disclosed in the international application ,this opinion has been established on the basis of :

   a. a sequence listing filed or furnished
      ☐ on paper
      ☐ in electronic form

   b. time of filing or furnishing
      ☐ contained in the applicant as filed
      ☐ filed together with the application in electronic form
      ☐ furnished subsequently to this Authority for the purposes of search

4. ☐ In addition, in the case that more than one version or copy of a sequence listing has been filed or furnished, the required statements that the information in the subsequent or additional copies is identical to that in the application as filed or does not go beyond the application as filed, as appropriate, were furnished.

5. Additional comments:

Form PCT/ISA/237(Box No. I) (July 2009)

WRITTEN OPINION OF THE INTERNATIONAL SEARCHING AUTHORITY

International application No.
PCT/CN2011/077718

Box No. V **Reasoned statement under Rule 43*bis*.1(a)(i) with regard to novelty, inventive step or industrial applicability; citations and explanations supporting such statement**

1. Statement:

Novelty (N)	Claims	1-27	YES
	Claims	None	NO
Inventive step (IS)	Claims	None	YES
	Claims	1-27	NO
Industrial applicability (IA)	Claims	1-27	YES
	Claims	None	NO

2. Citations and explanations

The following documents is cited as reference:

D1: CN102138309 A (France Telecom) 27 Jul. 2011（27.07.2011）

D2: Wei Ning et al., Joint Processing Precoding for Coordinated Multi-Point Transmission in LTE-A, ZTE COMMUNICATIONS, Feb. 2010, Vol.16, No.1, pages37-39

1. NOVELITY

1.1 Independent claim 1 requests to protect a method for wireless communication in a system. D1 is regarded as the closest prior art of the technical solution in claim 1. D1 discloses a method for pre-equalized, and discloses in particular the following features (see description paragraphs 69 -237): a destination communicating entity (EC2) evaluates a relative focusing quality of a pre-equalized signal, with respect to a quality at a focal point, where the signal is emitted by an original antenna (A1) and received by a destination antenna (A2); the modification of focusing at the destination of an original communicating entity (EC1) is requested by the destination communicating entity (EC2) for a following instant; the original communicating entity (EC1) modifies the parameters according to the request of the destination communicating entity; the method in the invention also can apply in the MIMO system.

Claim 1 differs from D1 in: transmitting the predistorted signal from the transmitter to the receiver via the propagation path; receiving the predistorting signal at the receiver.

Therefore claim 1 involves novelty and meets the criteria set out in PCT 33(2).

1.2 Claims 2-11 are directly or indirectly dependent on independent claim 1. So claims 2-11 involve novelty and meet the criteria set out in PCT 33(2).

1.3 Independent claim 12 requests to protect a system for wireless communication in a system. D1 is regarded as the closest prior art of the technical solution in claim 12. D1 discloses a system for wireless communication, and discloses in particular the following features (see description paragraphs 69 -237): a destination communicating entity (EC2) evaluates a relative focusing quality of a pre-equalized signal, with respect to a quality at a focal point, where the signal is emitted by an original antenna (A1) and received by a destination antenna (A2); the modification of focusing at the destination of an original communicating entity (EC1) is requested by the destination communicating entity (EC2) for a following instant; the original communicating entity (EC1) modifies the parameters according to the request of the destination communicating entity. the system can be a MIMO system.

Claim 12 differs from D1 in: transmitting the predistorted signal to the receiver by the transmitter via the propagation path.

Therefore claim 12 involves novelty and meets the criteria set out in PCT 33(2).

1.4 Claims 13-20 are directly dependent on independent claim 12. So claims 13-20 involve novelty and meet the criteria set out in PCT 33(2).

1.5 Independent claim 21 requests to protect a base station. D1 is regarded as the closest prior art of the technical solution in claim 21. D1 discloses an original communicating entity (EC1) for wireless communication, and discloses in particular the following features (see description paragraphs 69 -237): a destination communicating entity (EC2) evaluates a relative focusing quality of a pre-equalized signal, with respect to a quality at a focal point, where the signal is emitted by the original antenna (A1) and received by a destination antenna (A2); the modification of focusing at the destination of an original communicating entity (EC1) is requested by the destination communicating entity (EC2) for a following instant; the

Supplemental Box

In case **the space in any of the preceding boxes is not sufficient.**

Continuation of: Box No. V

original communicating entity (EC1) modifies the parameters according to the request of the destination communicating entity, the original communicating entity (EC1) can be in a MIMO system; the invention can be performed by the instructions on the computer-readable storage medium..

Claim 21 differs from D1 in that: the base station comprises at least one transmitter, and a computing device; the operations on the computer-readable storage medium also comprise transmitting the predistorted signal from the transmitter to the receiver via the propagation path.

Therefore claim 21 involves novelty and meets the criteria set out in PCT 33(2).

1.6 Claims 22-27 are directly dependent on independent claim 21. So claims 22-27 involve novelty and meet the criteria set out in PCT 33(2).

2. INVENTITVE STEP

2.1 D1 discloses (see description paragraphs 69 -237)that the modification of focusing at the destination of an original communicating entity (EC1) is requested by the destination communicating entity (EC2) for a following instant; the original communicating entity (EC1) modifies the parameters according to the request of the destination communicating entity. It is well known in the art that the transmitter transmits the signal and the receiver receives the transmitted signal in a communication process. It is the common knowledge for a person skilled in the art that at the following instant disclosed in D1, the original communicating entity (EC1) transmits the predistorted signal to the destination communicating entity (EC2) via the propagation path and the destination communicating entity (EC2) receives the predistorted signal. The person skilled in the art considering his common technology in combination based on D1 would obviously arrive at the subject-matter of claim 1 without exercising an inventive step. So the subject-matter of claim 1 does not involve an inventive step and does not meet the criteria set out in PCT Article 33(3).

2.2 Claim 2 is dependent on claim 1. It is well known in the art that an estimation of a delay, an estimation of a doppler frequency, an estimation of a direction of arrival, an estimation of a direction of depature, a complex amplitude of the propagationpath are common path parameter information. The person skilled in the art considering his common technology in combination based on D1 would obviously arrive at the subject-matter of claim 2 without exercising an inventive step. So the subject-matter of claim 2 does not involve an inventive step and does not meet the criteria set out in PCT Article 33(3).

2.3 Claim 3 is dependent on claim 2. It is well known in the art that an estimation of a polarization status of the propagation path is common path parameter information. The person skilled in the art considering his common technology in combination based on D1 would obviously arrive at the subject-matter of claim 3 without exercising an inventive step. So the subject-matter of claim 3 does not involve an inventive step and does not meet the criteria set out in PCT Article 33(3).

2.4 Claim 4 is dependent on claim 1. It is well known in the art that the common estimation technique to obtain the path parameter information includes a maximum likelihood estimation algorthm, periodogram, correlatorgram, spectral-based methods, Bartlett beamformers, Capon beamformers, subspace-based techniques, MUSIC, ESPRIT, approximation of the maximum-likelihood method based on iterative schemes, SAGE, RiMAX, maximum-a-posteriori based methods, Evidence framework, Bayesian techniques, tracking algorithms, the Kalman filtering techniques, enhanced Kalman filtering techniques, particle filtering techniques, and least square error methods. The person skilled in the art considering his common technology in combination based on D1 would obviously arrive at the subject-matter of claim 4 without exercising an inventive step. So the subject-matter of claim 4 does not involve an inventive step and does not meet the criteria set out in PCT Article 33(3).

2.5 Claim 5 is dependent on claim 1. D1 discloses (see description paragraphs 69 -237) that the communication entities are each comprised of MIMO or SISO wireless communication system. The person skilled in the art considering his common technology in combination based on D1 would obviously arrive at the subject-matter of claim 5 without exercising an inventive step. So the subject-matter of claim 5 does not involve an inventive step and does not meet the criteria set out in PCT Article 33(3).

(see Supplemental Box)

Supplemental Box

In case **the space in any of the preceding boxes is not sufficient.**

Continuation of: Box No. V

2.6 Claim 6 is dependent on claim 1. D1 discloses (see description paragraphs 69 -237)that the communication entities are each comprised of MIMO or SISO wireless communication system. The person skilled in the art considering his common technology in combination based on D1 would obviously arrive at the subject-matter of claim 6 without exercising an inventive step. So the subject-matter of claim 6 does not involve an inventive step and does not meet the criteria set out in PCT Article 33(3).

2.7 Claim 7 is dependent on claim 1. It is well known in the art that using the system responses illustrates the states of the difference systems in order to remove the impact of the systems. So it is the common knowledge for a person skilled in the art that a system response estimation of the first signal is transmitted from the receiver to the transmitter, and a second signal is predistorted at the transmitter according to the system response estimation. The person skilled in the art considering his common technology in combination based on D1 would obviously arrive at the subject-matter of claim 7 without exercising an inventive step. So the subject-matter of claim 7 does not involve an inventive step and does not meet the criteria set out in PCT Article 33(3).

2.8 Claim 8 is dependent on claim 1. It is well known in the art that using the joint processing technique to equalizing the predistorted signal at the receiver in a coordinated multiple-point system is to improve the perfomance of the receiver. The person skilled in the art considering his common technology in combination based on D1 would obviously arrive at the subject-matter of claim 8 without exercising an inventive step. So the subject-matter of claim 8 does not involve an inventive step and does not meet the criteria set out in PCT Article 33(3).

2.9 Claim 9 is dependent on claim 8. It is well known in the art that using the joint processing technique to equalizing the predistorted signal at the receiver in a coordinated multiple-point system is to improve the perfomance of the receiver. The person skilled in the art considering his common technology in combination based on D1 would obviously arrive at the subject-matter of claim 9 without exercising an inventive step. So the subject-matter of claim 9 does not involve an inventive step and does not meet the criteria set out in PCT Article 33(3).

2.10 Claim 10 is dependent on claim 1.D1 discloses (see description paragraphs 69 -237) that the communicating entity can be a base station or a mobile terminal. D1 discloses the appendant features of dependent claim 10. So the subject-matter of claim 10 does not involve an inventive step and does not meet the criteria set out in PCT Article 33(3).

2.11 Claim 11 is dependent on claim 1. D2 discloses that (see pages37-39, fig. 1) a communication system comprises a plutality of receiver and a plurality of transmitter, and the plurality of propagation paths are formed between the plurality of transmitters and the plurality of receivers, and the predistorting techniques can be used in the system. Said features as described in D2 are providing the same advantages that they can improve the perfomance of the system.Therefore it would be obvious for a person skilled in the art to apply the teaching of D2 to D1. A person skilled in the art considering D2 in combination with the common knowledge based on D1 would obviously arrive at the subject-matter of claim 11 without exercising an inventive step. So the subject-matter of claim 11 does not involve an inventive step and does not meet the criteria set out in PCT Article 33(3).

2.12 D1 discloses (see description paragraphs 69 -237)that the modification of focusing at the destination of an original communicating entity (EC1) is requested by the destination communicating entity (EC2) for a following instant; the original communicating entity (EC1) modifies the parameters according to the request of the destination communicating entity. It is well known in the art that the transmitter transmits the signal and the receiver receives the transmitted signal in a communication process. It is the common knowledge for a person skilled in the art that at the following instant disclosed in D1, the original communicating entity (EC1) transmits the predistorted signal to the destination communicating entity (EC2) via the propagation path. The person skilled in the art considering his common technology in combination based on D1 would obviously arrive at the subject-matter of claim 12 without exercising an inventive step. So the subject-matter of claim 12 does not involve an inventive step and does not meet the criteria set out in PCT Article 33(3).

2.13 Claim 13 is dependent on claim 12. It is well known in the art that an estimation of a delay, an estimation of a doppler frequency, an estimation of a direction of arrival, an estimation of a direction of depature, a complex amplitude of the propagationpath are

(see Supplemental Box)

Supplemental Box

In case **the space in any of the preceding boxes is not sufficient.**

Continuation of: Box No. V

common path parameter information. The person skilled in the art considering his common technology in combination based on D1 would obviously arrive at the subject-matter of claim 13 without exercising an inventive step. So the subject-matter of claim 13 does not involve an inventive step and does not meet the criteria set out in PCT Article 33(3).

2.14 Claim 14 is dependent on claim 12. It is well known in the art that an estimation of a polarization status of the propagation path is common path parameter information. The person skilled in the art considering his common technology in combination based on D1 would obviously arrive at the subject-matter of claim 14 without exercising an inventive step. So the subject-matter of claim 14 does not involve an inventive step and does not meet the criteria set out in PCT Article 33(3).

2.15 Claim 15 is dependent on claim 12. It is well known in the art that the common estimation technique to obtain the path parameter information includes a maximum likelihood estimation algorthm, periodogram, correlatorgram, spectral-based methods, Bartlett beamformers, Capon beamformers, subspace-based techniques, MUSIC, ESPRIT, approximation of the maximum-likelihood method based on iterative schemes, SAGE, RiMAX, maximum-a-posteriori based methods, Evidence framework, Bayesian techniques, tracking algorithms, the Kalman filtering techniques, enhanced Kalman filtering techniques, particle filtering techniques, and least square error methods. The person skilled in the art considering his common technology in combination based on D1 would obviously arrive at the subject-matter of claim 15 without exercising an inventive step. So the subject-matter of claim 15 does not involve an inventive step and does not meet the criteria set out in PCT Article 33(3).

2.16 Claim 16 is dependent on claim 12. D1 discloses (see description paragraphs 69 -237)that the communication entities are each comprised of MIMO or SISO wireless communication system. The person skilled in the art considering his common technology in combination based on D1 would obviously arrive at the subject-matter of claim 16 without exercising an inventive step. So the subject-matter of claim 16 does not involve an inventive step and does not meet the criteria set out in PCT Article 33(3).

2.17 Claim 17 is dependent on claim 12. D1 discloses (see description paragraphs 69 -237)that the communication entities are each comprised of MIMO or SISO wireless communication system. The person skilled in the art considering his common technology in combination based on D1 would obviously arrive at the subject-matter of claim 17 without exercising an inventive step. So the subject-matter of claim 17 does not involve an inventive step and does not meet the criteria set out in PCT Article 33(3).

2.18 Claim 18 is dependent on claim 12. It is well known in the art that using the system responses illustrates the states of the difference systems in order to remove the impact of the systems. So it is the common knowledge for a person skilled in the art that a system response estimation of the first signal is transmitted from the receiver to the transmitter, and a second signal is predistorted at the transmitter according to the system response estimation. The person skilled in the art considering his common technology in combination based on D1 would obviously arrive at the subject-matter of claim 12 without exercising an inventive step. So the subject-matter of claim 12 does not involve an inventive step and does not meet the criteria set out in PCT Article 33(3).

2.19 Claim 19 is dependent on claim 12. It is well known in the art that using the joint processing technique to equalizing the predistorted signal at the receiver in a coordinated multiple-point system is to improve the perfomance of the receiver. The person skilled in the art considering his common technology in combination based on D1 would obviously arrive at the subject-matter of claim 19 without exercising an inventive step. So the subject-matter of claim 19 does not involve an inventive step and does not meet the criteria set out in PCT Article 33(3).

2.20 Claim 20 is dependent on claim 12.D1 discloses (see description paragraphs 69 -237)that the communicating entity can be a base station or a mobile terminal. D1 discloses the appendant features of dependent claim 20. So the subject-matter of claim 20 does not involve an inventive step and does not meet the criteria set out in PCT Article 33(3).

(see Supplemental Box)

Supplemental Box

In case **the space in any of the preceding boxes is not sufficient.**

Continuation of: Box No. V

2.21 D1 discloses (see description paragraphs 69 -237) that the modification of focusing at the destination of an original communicating entity (EC1) is requested by the destination communicating entity (EC2) for a following instant; the original communicating entity (EC1) modifies the parameters according to the request of the destination communicating entity; The communicating entity can be a base station or a mobile terminal; the executable instructions stored on the computer-readable storage medium can perform operations in the invention. It is well known in the art that the transmitter transmits the signal and the receiver receives the transmitted signal in a communication process. It is the common knowledge for a person skilled in the art that at the following instant disclosed in D1, the original communicating entity (EC1) transmits the predistorted signal to the destination communicating entity (EC2) via the propagation path and the original communicating entity (EC2) includes at least one transmitter and a computing device to perform the communication process. The person skilled in the art considering his common technology in combination based on D1 would obviously arrive at the subject-matter of claim 21 without exercising an inventive step. So the subject-matter of claim 21 does not involve an inventive step and does not meet the criteria set out in PCT Article 33(3).

2.22 Claim 22 is dependent on claim 21. It is well known in the art that an estimation of a delay, an estimation of a doppler frequency, an estimation of a direction of arrival, an estimation of a direction of depature, a complex amplitude of the propagationpath are common path parameter information. The person skilled in the art considering his common technology in combination based on D1 would obviously arrive at the subject-matter of claim 22 without exercising an inventive step. So the subject-matter of claim 22 does not involve an inventive step and does not meet the criteria set out in PCT Article 33(3).

2.23 Claim 23 is dependent on claim 21. It is well known in the art that an estimation of a polarization status of the propagation path is common path parameter information. The person skilled in the art considering his common technology in combination based on D1 would obviously arrive at the subject-matter of claim 23 without exercising an inventive step. So the subject-matter of claim 23 does not involve an inventive step and does not meet the criteria set out in PCT Article 33(3).

2.24 Claim 24 is dependent on claim 21. It is well known in the art that the common estimation technique to obtain the path parameter information includes a maximum likelihood estimation algorthm, periodogram, correlatorgram, spectral-based methods, Bartlett beamformers, Capon beamformers, subspace-based techniques, MUSIC, ESPRIT, approximation of the maximum-likelihood method based on iterative schemes, SAGE, RiMAX, maximum-a-posteriori based methods, Evidence framework, Bayesian techniques, tracking algorithms, the Kalman filtering techniques, enhanced Kalman filtering techniques, particle filtering techniques, and least square error methods. The person skilled in the art considering his common technology in combination based on D1 would obviously arrive at the subject-matter of claim 24 without exercising an inventive step. So the subject-matter of claim 24 does not involve an inventive step and does not meet the criteria set out in PCT Article 33(3).

2.25 Claim 25 is dependent on claim 21. D1 discloses (see description paragraphs 69 -237) that the communication entities are each comprised of MIMO or SISO wireless communication system. The person skilled in the art considering his common technology in combination based on D1 would obviously arrive at the subject-matter of claim 25 without exercising an inventive step. So the subject-matter of claim 25 does not involve an inventive step and does not meet the criteria set out in PCT Article 33(3).

2.26 Claim 26 is dependent on claim 21. D1 discloses (see description paragraphs 69 -237) that the communication entities are each comprised of MIMO or SISO wireless communication system. The person skilled in the art considering his common technology in combination based on D1 would obviously arrive at the subject-matter of claim 26 without exercising an inventive step. So the subject-matter of claim 26 does not involve an inventive step and does not meet the criteria set out in PCT Article 33(3).

2.27 Claim 27 is dependent on claim 21. It is well known in the art that using the system responses illustrates the states of the difference systems in order to remove the impact of the systems. So it is the common knowledge for a person skilled in the art that a system response estimation of the first signal is transmitted from the receiver to the transmitter, and a second signal is predistorted at the transmitter according to the system response estimation. The person skilled in the art considering his common technology in combination based on D1 would obviously arrive at the subject-matter of claim 27 without exercising an inventive step. So the subject-matter of claim 27 does not involve an inventive step and does not meet the criteria set out in PCT Article 33(3).

3. INDUSTRIAL APPLICABILITY
The inventions of claims 1-27 can be made or used industrially, so they are industrially applicable, meeting the provision of PCT Article 33(4).

ADVANCE E-MAIL

From the INTERNATIONAL BUREAU

PCT

NOTIFICATION OF THE RECORDING OF A CHANGE

(PCT Rule 92*bis*.1 and Administrative Instructions, Section 422)

To:

KING & WOOD MALLESONS LAWYERS
20th Floor, East Tower, World Financial Centre
No.1 Dongsanhuan Zhonglu, Chaoyang District
Beijing 100020
CHINE

Date of mailing *(day/month/year)*
11 April 2012 (11.04.2012)

Applicant's or agent's file reference
EIE110161PCT

International application No.
PCT/CN2011/077718

International filing date *(day/month/year)*
28 July 2011 (28.07.2011)

IMPORTANT NOTIFICATION

1. The following indications appeared on record concerning:

☐ the applicant ☐ the inventor ☒ the agent ☐ the common representative

Name and Address	State of Nationality	State of Residence
KING & WOOD PRC LAWYERS 20th Floor, East Tower, World Financial Centre No.1 Dongsanhuan Zhonglu, Chaoyang District Beijing 100020 China		
	Telephone No. 86 10 58785588	
	Facsimile No. 86 10 58785544	
	E-mail address	

2. The International Bureau hereby notifies the applicant that the following change has been recorded concerning:

☐ the person ☒ the name ☐ the address ☐ the nationality ☐ the residence

Name and Address	State of Nationality	State of Residence
KING & WOOD MALLESONS LAWYERS 20th Floor, East Tower, World Financial Centre No.1 Dongsanhuan Zhonglu, Chaoyang District Beijing 100020 China		
	Telephone No. 86 10 58785588	
	Facsimile No. 86 10 58785544	
	E-mail address ☐ Notifications by e-mail authorized	

3. Further observations, if necessary:

4. A copy of this notification has been sent to:

☒ the receiving Office
☒ the International Searching Authority
☐ the Authority(ies) specified for supplementary search
☐ the International Preliminary Examining Authority
☐ the designated Offices concerned
☐ the elected Offices concerned
☐ other:

The International Bureau of WIPO 34, chemin des Colombettes 1211 Geneva 20, Switzerland Facsimile No. +41 22 338 89 65	Authorized officer Bai Lingfei e-mail pt02.pct@wipo.int Telephone No. +41 22 338 74 02

PTO-1390 (09-11)
Approved for use through 4/30/2013. OMB 0651-0021
U.S. Patent and Trademark Office; U.S. DEPARTMENT OF COMMERCE
Under the Paperwork Reduction Act of 1995, no persons are required to respond to a collection of information unless it displays a valid OMB control number.

TRANSMITTAL LETTER TO THE UNITED STATES DESIGNATED/ELECTED OFFICE (DO/EO/US) CONCERNING A SUBMISSION UNDER 35 U.S.C. 371

ATTORNEY'S DOCKET NUMBER
I1013.10038US01

U.S. APPLICATION NO. (If known, see 37 CFR 1.5)

INTERNATIONAL APPLICATION NO.	INTERNATIONAL FILING DATE	PRIORITY DATE CLAIMED
PCT/CN2011/077718	2011-07-28	2011-07-28

TITLE OF INVENTION
USER-FOCUSING TECHNIQUE FOR WIRELESS COMMUNICATION SYSTEMS

APPLICANT(S) FOR DO/EO/US
Xuefeng YIN

Applicant herewith submits to the United States Designated/Elected Office (DO/EO/US) the following items and other information:

1. ☑ This is a **FIRST** submission of items concerning a submission under 35 U.S.C. 371.
2. ☐ This is a **SECOND** or **SUBSEQUENT** submission of items concerning a submission under 35 U.S.C. 371.
3. ☑ This is an express request to begin national examination procedures (35 U.S.C. 371(f)). The submission must include items (5), (6), (9) and (21) indicated below.
4. ☐ The US has been elected (Article 31).
5. ☑ A copy of the International Application as filed (35 U.S.C. 371(c)(2))
   a. ☑ is attached hereto (required only if not communicated by the International Bureau).
   b. ☐ has been communicated by the International Bureau.
   c. ☐ is not required, as the application was filed in the United States Receiving Office (RO/US).
6. ☐ An English language translation of the International Application as filed (35 U.S.C. 371(c)(2)).
   a. ☐ is attached hereto.
   b. ☐ has been previously submitted under 35 U.S.C. 154(d)(4).
7. ☑ Amendments to the claims of the International Application under PCT Article 19 (35 U.S.C. 371(c)(3))
   a. ☐ are attached hereto (required only if not communicated by the International Bureau).
   b. ☐ have been communicated by the International Bureau.
   c. ☐ have not been made; however, the time limit for making such amendments has NOT expired.
   d. ☑ have not been made and will not be made.
8. ☐ An English language translation of the amendments to the claims under PCT Article 19 (35 U.S.C. 371(c)(3)).
9. ☑ An oath or declaration of the inventor(s) (35 U.S.C. 371(c)(4)).
10. ☐ An English language translation of the annexes of the International Preliminary Examination Report under PCT Article 36 (35 U.S.C. 371(c)(5)).

Items 11 to 20 below concern document(s) or information included:

11. ☑ An Information Disclosure Statement under 37 CFR 1.97 and 1.98.
12. ☑ An assignment document for recording. A separate cover sheet in compliance with 37 CFR 3.28 and 3.31 is included.
13. ☑ A preliminary amendment.
14. ☑ An Application Data Sheet under 37 CFR 1.76.
15. ☐ A substitute specification.
16. ☑ A power of attorney and/or change of address letter.
17. ☐ A computer-readable form of the sequence listing in accordance with PCT Rule 13*ter*.3 and 37 CFR 1.821- 1.825.
18. ☐ A second copy of the published International Application under 35 U.S.C. 154(d)(4).
19. ☐ A second copy of the English language translation of the international application under 35 U.S.C. 154(d)(4).

This collection of information is required by 37 CFR 1.414 and 1.491-1 .492. The information is required to obtain or retain a b enefit by the public, w hich is to file (and by the USPTO to pro cess) an application . Confidentiality is governed by 35 U.S.C. 122 and 37 CFR 1.11 and 1.14. This collection is estimated to take 15 minutes to complete, including gathering information, preparing, and submitting the completed form to the USPTO. Time will vary depending upon the individual case. Any comments on the amount of time you require to complete this form and/or suggestions for reducing this burden, should be sent to the Chief Information Officer, U.S. Patent and Trademark Office, U.S. Department of Commerce, P.O. Box 1450, Alexandria, VA 22313-1450. DO NOT SEND FEE S OR COMPLE TED FORMS TO THIS ADDRESS. **SEND TO: Mail Stop PCT, Commissioner for Patents, P.O. Box 1450, Alexandria, VA 22313-1450**.

Under the Paperwork Reduction Act of 1995, no persons are required to respond to a collection of information unless it displays a valid OMB control number.

U.S. APPLICATION NO. (if known, see 37 CFR 1.5)	INTERNATIONAL APPLICATION NO.	ATTORNEY'S DOCKET NUMBER
	PCT/CN2011/077718	I1013.10038US01

20. Other items or information:

The following fees have been submitted	CALCULATIONS	PTO USE ONLY
21. ☐ Basic national fee (37 CFR 1.492(a))…….....…….. **$380**	$ 380	
22. ☐ Examination fee (37 CFR 1.492(c)) If the written opinion prepared by ISA/US or the international preliminary examination report prepared by IPEA/US indicates all claims satisfy provisions of PCT Article 33(1)-(4)…….…. **$0** All other situations…….**$250**	$250	
23. ☐ Search fee (37 CFR 1.492(b)) If the written opinion of the ISA/US or the International preliminary examination report prepared by IPEA/US indicates all claims satisfy provisions of PCT Article 33(1)-(4)……..... **$0** Search fee (37 CFR 1.445(a)(2)) has been paid on the international application to the USPTO as an International Searching Authority…….…….…….**$120** International Search Report prepared by an ISA other than the US and provided to the Office or previously communicated to the US by the IB……..……..…..…….…. **$490** All other situations……**$620**	$ 490	
TOTAL OF 21, 22 and 23 =	1120	

☐ Additional fee for specification and drawings filed in paper over 100 sheets (excluding sequence listing in compliance with 37 CFR 1.821(c) or (e) in an electronic medium or computer program listing in an electronic medium) (37 CFR 1.492(j)).
The fee is **$310** for each additional 50 sheets of paper or fraction thereof.

Total Sheets	Extra Sheets	Number of each additional 50 or fraction thereof (round **up** to a whole number)	RATE	
- 100 =	/50 =		x $**310**	$ 0

Surcharge of **$130.00** for furnishing any of the search fee, examination fee, or the oath or declaration after the date of commencement of the national stage (37 CFR 1.492(h)).	$ 0

CLAIMS	NUMBER FILED	NUMBER EXTRA	RATE	$
Total claims	25 - 20 =	5	x $ **60**	$300
Independent claims	4 - 3 =	1	x **$250**	$250
MULTIPLE DEPENDENT CLAIM(S) (if applicable)			+ **$450**	$ 0
			TOTAL OF ABOVE CALCULATIONS =	$0

☐ Applicant claims small entity status. See 37 CFR 1.27. Fees above are reduced by ½.		
SUBTOTAL =	$ 1670	
Processing fee of **$130.00** for furnishing the English translation later than 30 months from the earliest claimed priority date (37 CFR 1.492(i)). +	$ 0	
TOTAL NATIONAL FEE =	$ 1670	
Fee for recording the enclosed assignment (37 CFR 1.21(h)). The assignment must be accompanied by an appropriate cover sheet (37 CFR 3.28, 3.31). **$40.00** per property +	$ 0	
TOTAL FEES ENCLOSED =	$ 1670	
	Amount to be refunded:	$
	Amount to be charged	$

Under the Paperwork Reduction Act of 1995, no persons are required to respond to a collection of information unless it displays a valid OMB control number.

a. ☐ A check in the amount of $ _____ to cover the above fees is enclosed.

b. ☐ Please charge my Deposit Account No. _____ in the amount of $ _____ to cover the above fees.

c. ☐ The Commissioner is hereby authorized to charge any additional fees which may be required, or credit any overpayment to Deposit Account No. _____.

d. ☑ Fees are to be charged to a credit card. **WARNING:** Information on this form may become public. **Credit card information should not be included on this form.** Provide credit card information and authorization on PTO-2038. The PTO-2038 should only be mailed or faxed to the USPTO. However, when paying the basic national fee, the PTO-2038 may NOT be faxed to the USPTO.

ADVISORY: If filing by EFS-Web, do **NOT** attach the PTO-2038 form as a PDF along with your EFS-Web submission. Please be advised that this is **not** recommended and by doing so your **credit card information may be displayed via PAIR**. To protect your information, it is recommended paying fees online by using the electronic payment method.

NOTE: Where an appropriate time limit under 37 CFR 1.495 has not been met, a petition to revive (37 CFR 1.137(a) or (b)) must be filed and granted to restore the International Application to pending status.

SEND ALL CORRESPONDENCE TO:

R. Burns Israelsen
MASCHOFF GILMORE & ISRAELSEN
1441 W. Ute Blvd., Suite 100
Park City, Utah 84098

/R. Burns Israelsen/ Reg. #42685
SIGNATURE

R. Burns Israelsen
NAME

42,685
REGISTRATION NUMBER

Privacy Act Statement

The **Privacy Act of 1974 (P.L. 93-579)** requires that you be given certain information in connection with your submission of the attached form related to a patent application or patent. Accordingly, pursuant to the requirements of the Act, please be advised that: (1) the general authority for the collection of this information is 35 U.S.C. 2(b)(2); (2) furnishing of the information solicited is voluntary; and (3) the principal purpose for which the information is used by the U.S. Patent and Trademark Office is to process and/or examine your submission related to a patent application or patent. If you do not furnish the requested information, the U.S. Patent and Trademark Office may not be able to process and/or examine your submission, which may result in termination of proceedings or abandonment of the application or expiration of the patent.

The information provided by you in this form will be subject to the following routine uses:

1. The information on this form will be treated confidentially to the extent allowed under the Freedom of Information Act (5 U.S.C. 552) and the Privacy Act (5 U.S.C 552a). Records from this system of records may be disclosed to the Department of Justice to determine whether disclosure of these records is required by the Freedom of Information Act.
2. A record from this system of records may be disclosed, as a routine use, in the course of presenting evidence to a court, magistrate, or administrative tribunal, including disclosures to opposing counsel in the course of settlement negotiations.
3. A record in this system of records may be disclosed, as a routine use, to a Member of Congress submitting a request involving an individual, to whom the record pertains, when the individual has requested assistance from the Member with respect to the subject matter of the record.
4. A record in this system of records may be disclosed, as a routine use, to a contractor of the Agency having need for the information in order to perform a contract. Recipients of information shall be required to comply with the requirements of the Privacy Act of 1974, as amended, pursuant to 5 U.S.C. 552a(m).
5. A record related to an International Application filed under the Patent Cooperation Treaty in this system of records may be disclosed, as a routine use, to the International Bureau of the World Intellectual Property Organization, pursuant to the Patent Cooperation Treaty.
6. A record in this system of records may be disclosed, as a routine use, to another federal agency for purposes of National Security review (35 U.S.C. 181) and for review pursuant to the Atomic Energy Act (42 U.S.C. 218(c)).
7. A record from this system of records may be disclosed, as a routine use, to the Administrator, General Services, or his/her designee, during an inspection of records conducted by GSA as part of that agency's responsibility to recommend improvements in records management practices and programs, under authority of 44 U.S.C. 2904 and 2906. Such disclosure shall be made in accordance with the GSA regulations governing inspection of records for this purpose, and any other relevant (*i.e.*, GSA or Commerce) directive. Such disclosure shall not be used to make determinations about individuals.
8. A record from this system of records may be disclosed, as a routine use, to the public after either publication of the application pursuant to 35 U.S.C. 122(b) or issuance of a patent pursuant to 35 U.S.C. 151. Further, a record may be disclosed, subject to the limitations of 37 CFR 1.14, as a routine use, to the public if the record was filed in an application which became abandoned or in which the proceedings were terminated and which application is referenced by either a published application, an application open to public inspection or an issued patent.
9. A record from this system of records may be disclosed, as a routine use, to a Federal, State, or local law enforcement agency, if the USPTO becomes aware of a violation or potential violation of law or regulation.

PTO/SB/14 (11-08)
Approved for use through 01/31/2014. OMB 0651-0032
U.S. Patent and Trademark Office; U.S. DEPARTMENT OF COMMERCE
Under the Paperwork Reduction Act of 1995, no persons are required to respond to a collection of information unless it contains a valid OMB control number.

Application Data Sheet 37 CFR 1.76	Attorney Docket Number	I1013.10038US01
	Application Number	
Title of Invention	USER-FOCUSING TECHNIQUE FOR WIRELESS COMMUNICATION SYSTEMS	

The application data sheet is part of the provisional or nonprovisional application for which it is being submitted. The following form contains the bibliographic data arranged in a format specified by the United States Patent and Trademark Office as outlined in 37 CFR 1.76.
This document may be completed electronically and submitted to the Office in electronic format using the Electronic Filing System (EFS) or the document may be printed and included in a paper filed application.

Secrecy Order 37 CFR 5.2

☐ Portions or all of the application associated with this Application Data Sheet may fall under a Secrecy Order pursuant to 37 CFR 5.2 (Paper filers only. Applications that fall under Secrecy Order may not be filed electronically.)

Applicant Information:

Applicant 1 Remove

Applicant Authority ◉ Inventor ◯ Legal Representative under 35 U.S.C. 117 ◯ Party of Interest under 35 U.S.C. 118

Prefix	Given Name	Middle Name	Family Name	Suffix
	Xuefeng		YIN	

Residence Information (Select One) ◯ US Residency ◉ Non US Residency ◯ Active US Military Service

City	Shanghai	**Country Of Residence**[i]	CN
Citizenship under 37 CFR 1.41(b)[i]	CN		

Mailing Address of Applicant:

Address 1	No. 77 Tong Ji Xin Cun, Zhang Wu Lu		
Address 2	Yangpu District		
City	Shanghai	**State/Province**	
Postal Code	200092	**Country**[i]	CN

All Inventors Must Be Listed - Additional Inventor Information blocks may be generated within this form by selecting the **Add** button. Add

Correspondence Information:

Enter either Customer Number or complete the Correspondence Information section below.
For further information see 37 CFR 1.33(a).

☐ **An Address is being provided for the correspondence Information of this application.**

Customer Number	97149		
Email Address	docket@mgiip.com	Add Email	Remove Email

Application Information:

Title of the Invention	USER-FOCUSING TECHNIQUE FOR WIRELESS COMMUNICATION SYSTEMS		
Attorney Docket Number	I1013.10038US01	**Small Entity Status Claimed**	☐
Application Type	Nonprovisional		
Subject Matter	Utility		
Suggested Class (if any)		**Sub Class (if any)**	
Suggested Technology Center (if any)			
Total Number of Drawing Sheets (if any)	4	**Suggested Figure for Publication (if any)**	

Under the Paperwork Reduction Act of 1995, no persons are required to respond to a collection of information unless it contains a valid OMB control number.

Application Data Sheet 37 CFR 1.76	Attorney Docket Number	I1013.10038US01
	Application Number	
Title of Invention	USER-FOCUSING TECHNIQUE FOR WIRELESS COMMUNICATION SYSTEMS	

Publication Information:

☐	Request Early Publication (Fee required at time of Request 37 CFR 1.219)
☐	**Request Not to Publish.** I hereby request that the attached application not be published under 35 U.S. C. 122(b) and certify that the invention disclosed in the attached application **has not and will not** be the subject of an application filed in another country, or under a multilateral international agreement, that requires publication at eighteen months after filing.

Representative Information:

Representative information should be provided for all practitioners having a power of attorney in the application. Providing this information in the Application Data Sheet does not constitute a power of attorney in the application (see 37 CFR 1.32).
Enter either Customer Number or complete the Representative Name section below. If both sections are completed the Customer Number will be used for the Representative Information during processing.

Please Select One:	◉ Customer Number	◯ US Patent Practitioner	◯ Limited Recognition (37 CFR 11.9)
Customer Number	97149		

Domestic Benefit/National Stage Information:

This section allows for the applicant to either claim benefit under 35 U.S.C. 119(e), 120, 121, or 365(c) or indicate National Stage entry from a PCT application. Providing this information in the application data sheet constitutes the specific reference required by 35 U.S.C. 119(e) or 120, and 37 CFR 1.78(a)(2) or CFR 1.78(a)(4), and need not otherwise be made part of the specification.

Prior Application Status			Remove
Application Number	Continuity Type	Prior Application Number	Filing Date (YYYY-MM-DD)
	a 371 of international	PCT/CN2011/077718	2011-07-28

Additional Domestic Benefit/National Stage Data may be generated within this form by selecting the **Add** button. Add

Foreign Priority Information:

This section allows for the applicant to claim benefit of foreign priority and to identify any prior foreign application for which priority is not claimed. Providing this information in the application data sheet constitutes the claim for priority as required by 35 U.S.C. 119(b) and 37 CFR 1.55(a).

Remove

Application Number	Country [i]	Parent Filing Date (YYYY-MM-DD)	Priority Claimed
			◯ Yes ◯ No

Additional Foreign Priority Data may be generated within this form by selecting the **Add** button. Add

Assignee Information:

Providing this information in the application data sheet does not substitute for compliance with any requirement of part 3 of Title 37 of the CFR to have an assignment recorded in the Office.

Assignee 1 Remove

Under the Paperwork Reduction Act of 1995, no persons are required to respond to a collection of information unless it contains a valid OMB control number.

Application Data Sheet 37 CFR 1.76	Attorney Docket Number	I1013.10038US01
	Application Number	
Title of Invention	USER-FOCUSING TECHNIQUE FOR WIRELESS COMMUNICATION SYSTEMS	

If the Assignee is an Organization check here. ☒			
Organization Name	EMPIRE TECHNOLOGY DEVELOPMENT LLC		
Mailing Address Information:			
Address 1	2711 Centerville Road		
Address 2	Suite 400		
City	Wilmington	**State/Province**	DE
Country i	US	Postal Code	19808
Phone Number		Fax Number	
Email Address			
Additional Assignee Data may be generated within this form by selecting the **Add** button.			Add

Signature:

A signature of the applicant or representative is required in accordance with 37 CFR 1.33 and 10.18. Please see 37 CFR 1.4(d) for the form of the signature.					
Signature	/R. Burns Israelsen/ Reg. #42685			Date (YYYY-MM-DD)	2012-07-16
First Name	R. Burns	Last Name	Israelsen	Registration Number	42685

This collection of information is required by 37 CFR 1.76. The information is required to obtain or retain a benefit by the public which is to file (and by the USPTO to process) an application. Confidentiality is governed by 35 U.S.C. 122 and 37 CFR 1.14. This collection is estimated to take 23 minutes to complete, including gathering, preparing, and submitting the completed application data sheet form to the USPTO. Time will vary depending upon the individual case. Any comments on the amount of time you require to complete this form and/or suggestions for reducing this burden, should be sent to the Chief Information Officer, U.S. Patent and Trademark Office, U.S. Department of Commerce, P.O. Box 1450, Alexandria, VA 22313-1450. DO NOT SEND FEES OR COMPLETED FORMS TO THIS ADDRESS. **SEND TO: Commissioner for Patents, P.O. Box 1450, Alexandria, VA 22313-1450.**

Privacy Act Statement

The Privacy Act of 1974 (P.L. 93-579) requires that you be given certain information in connection with your submission of the attached form related to a patent application or patent. Accordingly, pursuant to the requirements of the Act, please be advised that: (1) the general authority for the collection of this information is 35 U.S.C. 2(b)(2); (2) furnishing of the information solicited is voluntary; and (3) the principal purpose for which the information is used by the U.S. Patent and Trademark Office is to process and/or examine your submission related to a patent application or patent. If you do not furnish the requested information, the U.S. Patent and Trademark Office may not be able to process and/or examine your submission, which may result in termination of proceedings or abandonment of the application or expiration of the patent.

The information provided by you in this form will be subject to the following routine uses:

1. The information on this form will be treated confidentially to the extent allowed under the Freedom of Information Act (5 U.S.C. 552) and the Privacy Act (5 U.S.C. 552a). Records from this system of records may be disclosed to the Department of Justice to determine whether the Freedom of Information Act requires disclosure of these records.

2. A record from this system of records may be disclosed, as a routine use, in the course of presenting evidence to a court, magistrate, or administrative tribunal, including disclosures to opposing counsel in the course of settlement negotiations.

3. A record in this system of records may be disclosed, as a routine use, to a Member of Congress submitting a request involving an individual, to whom the record pertains, when the individual has requested assistance from the Member with respect to the subject matter of the record.

4. A record in this system of records may be disclosed, as a routine use, to a contractor of the Agency having need for the information in order to perform a contract. Recipients of information shall be required to comply with the requirements of the Privacy Act of 1974, as amended, pursuant to 5 U.S.C. 552a(m).

5. A record related to an International Application filed under the Patent Cooperation Treaty in this system of records may be disclosed, as a routine use, to the International Bureau of the World Intellectual Property Organization, pursuant to the Patent Cooperation Treaty.

6. A record in this system of records may be disclosed, as a routine use, to another federal agency for purposes of National Security review (35 U.S.C. 181) and for review pursuant to the Atomic Energy Act (42 U.S.C. 218(c)).

7. A record from this system of records may be disclosed, as a routine use, to the Administrator, General Services, or his/her designee, during an inspection of records conducted by GSA as part of that agency's responsibility to recommend improvements in records management practices and programs, under authority of 44 U.S.C. 2904 and 2906. Such disclosure shall be made in accordance with the GSA regulations governing inspection of records for this purpose, and any other relevant (i.e., GSA or Commerce) directive. Such disclosure shall not be used to make determinations about individuals.

8. A record from this system of records may be disclosed, as a routine use, to the public after either publication of the application pursuant to 35 U.S.C. 122(b) or issuance of a patent pursuant to 35 U.S.C. 151. Further, a record may be disclosed, subject to the limitations of 37 CFR 1.14, as a routine use, to the public if the record was filed in an application which became abandoned or in which the proceedings were terminated and which application is referenced by either a published application, an application open to public inspections or an issued patent.

9. A record from this system of records may be disclosed, as a routine use, to a Federal, State, or local law enforcement agency, if the USPTO becomes aware of a violation or potential violation of law or regulation.

PTO/SB/101 (01-11)
Approved for use through 01/31/2014. OMB 0651-0032
U.S. Patent and Trademark Office; U.S. DEPARTMENT OF COMMERCE
Under the Paperwork Reduction Act of 1995, no persons are required to respond to a collection of information unless it contains a valid OMB control number.

实用专利或设计专利申请声明
(37 CFR 1.63)
DECLARATION FOR UTILITY OR DESIGN PATENT APPLICATION (37 CFR 1.63)

☑ 初次备案时提交的声明 Declaration Submitted With Initial Filing

或者 *OR*

☐ 初次备案后提交的声明（需要支付附加费 (37 CFR 1.16(f))) Declaration Submitted After Initial Filing (surcharge (37 CFR 1.16(f)) required)

Attorney Docket Number	I1013.10038US01
First Named Inventor	Xuefeng YIN
COMPLETE IF KNOWN	
Application Number	
Filing Date	July 28, 2011
Art Unit	
Examiner Name	

本人兹此声明：(1) 每位发明人的住址、邮寄地址及公民身份即是下文他们姓名旁边所列出之信息；及

(2) 本人相信以下指明的发明人是本主题发明的最初和第一位发明人，该发明人对所标示的发明主张权利并要求获得专利：

I hereby declare that: (1) Each inventor's residence, mailing address, and citizenship are as stated below next to their name; and (2) I believe the inventor(s) named below to be the original and first inventor(s) of the subject matter which is claimed and for which a patent is sought on the invention titled:

USER-FOCUSING TECHNIQUE FOR WIRELESS COMMUNICATION SYSTEMS

（发明名称）
(Title of the Invention)

该发明的申请
the application of which

☐ 如下所附
is attached hereto

或者 OR

☑ 于 (月/日/年) 07/28/2011 备案为美国申请号码或 PCT 国际

申请号码 PCT/CN2011/077718 并于 (月/日/年) _____ 修订（如适用）。

was filed on (MM/DD/YYYY) 07/28/2011 as United States Application Number or PCT International Application Number PCT/CN2011/077718 and was amended on (MM/DD/YYYY) _____ (if applicable).

本人兹此声明本人已经审阅并理解根据上文参考的任何修订文件进行修订的上述规范内容，包括权利主张。

I hereby state that I have reviewed and understand the contents of the above identified specification, including the claims, as amended by any amendment specifically referred to above.

本人承认有责任披露对专利性具有重要作用的信息，如 37 CFR 1.56 所定义，包括部分继续申请案的信息，及在之前申请案的备案日期与部分继续申请案的国家或 PCT 国际备案日期之间可用的信息。

I acknowledge the duty to disclose information which is material to patentability as defined in 37 CFR 1.56, including for continuation-in-part applications, material information which became available between the filing date of the prior application and the national or PCT international filing date of the continuation-in-part application.

This collection of information is required by 35 U.S.C. 115 and 37 CFR 1.63. The information is required to obtain or retain a benefit by the public which is to file (and by the USPTO to process) an application. Confidentiality is governed by 35 U.S.C. 122 and 37 CFR 1.11 and 1.14. This collection is estimated to take 21 minutes to complete, including gathering, preparing, and submitting the completed application form to the USPTO. Time will vary depending upon the individual case. Any comments on the amount of time you require to complete this form and/or suggestions for reducing this burden, should be sent to the Chief Information Officer, U.S. Patent and Trademark Office, U.S. Department of Commerce, P.O. Box 1450, Alexandria, VA 22313-1450. DO NOT SEND FEES OR COMPLETED FORMS TO THIS ADDRESS. **SEND TO: Commissioner for Patents, P.O. Box 1450, Alexandria, VA 22313-1450.**

If you need assistance in completing the form, call 1-800-PTO-9199 and select option 2.

Under the Paperwork Reduction Act of 1995, no persons are required to respond to a collection of information unless it contains a valid OMB control number.

声明 — 实用专利或设计专利申请
DECLARATION — Utility or Design Patent Application

参与办公室允许查阅专利申请的授权书

Authorization To Permit Access To Application by Participating Offices

☑ 如果勾选此方框，下文签署者兹此授予 USPTO 权力，向欧洲专利局 (EPO)、日本专利局 (JPO)、韩国知识产权局 (KIPO)、世界知识产权办公室 (WIPO)及任何其它知识产权办公室（对上述专利申请主张拥有优先权的外国申请所备案之处）查阅上述专利申请。请参见 37 CFR 1.14(c) 和 (h)。如果申请人不希望 EPO、JPO、KIPO、WIPO 或其它知识产权办公室（对上述专利申请主张拥有优先权的外国申请所备案之处）查阅上述专利申请，则不要勾选此方框。

If checked, the undersigned hereby grants the USPTO authority to provide the European Patent Office (EPO), the Japan Patent Office (JPO), the Korean Intellectual Property Office (KIPO), the World Intellectual Property Office (WIPO), and any other intellectual property offices in which a foreign application claiming priority to the above-identified patent application is filed access to the above-identified patent application. See 37 CFR 1.14(c) and (h). This box should not be checked if the applicant does not wish the EPO, JPO, KIPO, WIPO or other intellectual property office in which a foreign application claiming priority to the above-identified patent application is filed to have access to the above-identified patent application.

根据 37 CFR 1.14(h)(3) 的规定，对一份上述专利申请的查阅将涉及以下方面：1) 上述备案的专利申请；2) 任何外国申请（如果某个满足 37 CFR 1.55 核准副本要求的外国申请已经在上述专利申请中备案，上述专利申请根据 35 U.S.C. 119(a)-(d) 对其主张优先权）；及 3) 在上述专利申请中要求利益的任何美国备案申请。

In accordance with 37 CFR 1.14(h)(3), access will be provided to a copy of the above-identified patent application with respect to: 1) the above-identified patent application-as-filed; 2) any foreign application to which the above-identified patent application claims priority under 35 U.S.C. 119(a)-(d) if a copy of the foreign application that satisfies the certified copy requirement of 37 CFR 1.55 has been filed in the above-identified patent application; and 3) any U.S. application-as-filed from which benefit is sought in the above-identified patent application.

根据 37 CFR 1.14(c) 的规定，可以查阅关于参与办公室允许查阅申请的授权书的备案日期。

In accordance with 37 CFR 1.14(c), access may be provided to information concerning the date of filing the Authorization to Permit Access to Application by Participating Offices.

外国优先利益主张

Claim of Foreign Priority Benefits

本人兹此根据 35 U.S.C. 119(a)-(d) 或 (f)，或 365(b) 的规定，对任何外国专利申请、发明人或植物育种者的权利证书主张外国优先利益，或根据 365(a) 的规定对指定除了美国以外至少一个国家的任何 PCT 国际申请主张外国优先利益，如下所列并已确认，通过勾选方框，对任何外国专利申请、发明人或植物育种者的权利证书，或在对本申请主张优先权之日之前备案的任何 PCT 国际申请主张外国优先利益。

I hereby claim foreign priority benefits under 35 U.S.C. 119(a)-(d) or (f), or 365(b) of any foreign application(s) for patent, inventor's or plant breeder's rights certificate(s), or 365(a) of any PCT international application which designated at least one country other than the United States of America, listed below and have also identified below, by checking the box, any foreign application for patent, inventor's or plant breeder's rights certificate(s), or any PCT international application having a filing date before that of the application on which priority is claimed.

之前的外国申请号码 Prior Foreign Application Number(s)	国家 Country	外国备案日期 (月/日/年) Foreign Filing Date (MM/DD/YYYY)	未主张的优先权 Priority Not Claimed	是否附上核准副本？ Certified Copy Attached?	
				是 YES	否 NO
			☐	☐	☐
			☐	☐	☐
			☐	☐	☐
			☐	☐	☐

☐ 本文所附的补充优先数据表 PTO/SB/02B 上列出了附加的外国申请号码。

Additional foreign application numbers are listed on a supplemental priority data sheet PTO/SB/02B attached hereto.

Under the Paperwork Reduction Act of 1995, no persons are required to respond to a collection of information unless it contains a valid OMB control number.

声明 — 实用专利或设计专利申请
DECLARATION — Utility or Design Patent Application

所有信函寄住： Direct all correspondence to:	☑ 与客户编号相关的地址： The address associated with Customer Number:	97149	OR 或者	☐ 以下的信函地址 Correspondence address below

姓名 Name		
地址 Address		
城市 City	州 State	邮编 Zip
国家 Country	电话 Telephone	电子邮件 Email

警告：
WARNING:

呈请人/申请人应小心避免在专利申请中备案的文件中提交个人信息，这有可能会造成身份盗窃。USPTO 从不要求为支持呈请或申请而提供社保号码、银行账号或信用卡号码等个人信息（除非是用于付款目的的支票或信用卡授权表 PTO-2038）。如果在提交给 USPTO 的文件中有此类个人信息，呈请人/申请人应当考虑在向 USPTO 提交文件之前编辑此类个人信息。兹告知呈请人/申请人，在公布申请（除非根据 37 CFR 1.213(a) 的规定在申请中提出不予公布的请求）或签发专利之后，专利申请记录将公之于众。而且，如果在公布的申请或签发的专利中引用了该申请，那么已弃用的申请记录也会公之于众(见37 CFR 1.14)。为付款目的而提交的支票和信用卡授权表 PTO-2038 不会保留在申请文件中，因此不会向公众公布。兹告知呈请人/申请人，构成专利申请记录（例如 PTO/SB/01）的文件会放入隐私法案记录系统 — 商务部 COMMERCE-PAT-7 中，系统名称：***专利申请文件 (Patent Application Files)***。不在申请文件中保留的文件（例如 PTO-2038）则会放入隐私法案 COMMERCE/PAT-TM-10 系统中，系统名称：存款账户和电子资金转帐档案 (*Deposit Accounts and Electronic Funds Transfer Profiles*)。

Petitioner/applicant is cautioned to avoid submitting personal information in documents filed in a patent application that may contribute to identity theft. Personal information such as social security numbers, bank account numbers, or credit card numbers (other than a check or credit card authorization form PTO-2038 submitted for payment purposes) is never required by the USPTO to support a petition or an application. If this type of personal information is included in documents submitted to the USPTO, petitioners/applicants should consider redacting such personal information from the documents before submitting them to the USPTO. Petitioner/applicant is advised that the record of a patent application is available to the public after publication of the application (unless a non-publication request in compliance with 37 CFR 1.213(a) is made in the application) or issuance of a patent. Furthermore, the record from an abandoned application may also be available to the public if the application is referenced in a published application or an issued patent (see 37 CFR 1.14). Checks and credit card authorization forms PTO-2038 submitted for payment purposes are not retained in the application file and therefore are not publicly available. Petitioner/applicant is advised that documents which form the record of a patent application (such as the PTO/SB/01) are placed into the Privacy Act system of records DEPARTMENT OF COMMERCE, COMMERCE-PAT-7, System name: *Patent Application Files.* Documents not retained in an application file (such as the PTO-2038) are placed into the Privacy Act system of COMMERCE/PAT-TM-10, System name: *Deposit Accounts and Electronic Funds Transfer Profiles.*

PTO/SB/101 (01-11)
Approved for use through 01/31/2014. OMB 0651-0032
U.S. Patent and Trademark Office; U.S. DEPARTMENT OF COMMERCE
Under the Paperwork Reduction Act of 1995, no persons are required to respond to a collection of information unless it contains a valid OMB control number.

声明 — 实用专利或设计专利申请
DECLARATION — Utility or Design Patent Application

本人谨此声明，就我所知本文所做的所有声明都是真实的，关于信息和观点的声明也是真实的；而且作出这些声明的时候是本人知道根据 18 U.S.C. 1001 的规定，故意作出虚假声明及类似情况会受到罚款或监禁等惩罚，而此种故意作出的虚假声明可能会危及本申请或与此申请相关的任何已签发专利的有效性。

I hereby declare that all statements made herein of my own knowledge are true and that all statements made on information and belief are believed to be true; and further that these statements were made with the knowledge that willful false statements and the like so made are punishable by fine or imprisonment, or both, under 18 U.S.C. 1001 and that such willful false statements may jeopardize the validity of the application or any patent issued thereon.

唯一或第一发明人的姓名：
NAME OF SOLE OR FIRST INVENTOR:

☐ 已为此未签名发明人备案了一份请求书
A petition has been filed for this unsigned inventor

名字（包括字和中间名(如有的话)） Given Name (first and middle [if any]) Xuefeng	姓氏 Family Name or Surname YIN
发明人签名 Inventor's Signature Yinxuefeng	日期 Date 2012.07.09
住址：城市 Residence: City Shanghai	州 State
国家 Country CN	公民身份 Citizenship CN
邮寄地址 Mailing address No. 77 Tong Ji Xin Cun, Zhang Wu Lu, Yangpu District	
城市 City Shanghai	州 State
邮编 Zip 200092	国家 Country CN

☐ 本文件包括 _____ 张补充 PTO/SB/02A 或 02LR 中指明了其他发明人或法定代表。
Additional inventors or a legal representative are being named on the _____ supplemental sheet(s) PTO/SB/02A or 02LR attached hereto.

PCT REQUEST

Print Out (Original in Electronic Form)

0	**For receiving Office use only**	
0-1	International Application No.	
0-2	International Filing Date	
0-3	Name of receiving Office and "PCT International Application"	

0-4	**Form PCT/RO/101 PCT Request**	
0-4-1	Prepared Using	PCT-SAFE Version 3.51.044.220 MT/FOP 20100101/0.20.5.18
0-5	**Petition** The undersigned requests that the present international application be processed according to the Patent Cooperation Treaty	
0-6	**Receiving Office (specified by the applicant)**	State Intellectual Property Office of the People's Republic of China (RO/CN)
0-7	**Applicant's or agent's file reference**	EIE110161PCT
I	**Title of Invention**	USER-FOCUSING TECHNIQUE FOR WIRELESS COMMUNICATION SYSTEMS
II	**Applicant**	
II-1	This person is	Applicant only
II-2	Applicant for	All designated States except US
II-4	Name	EMPIRE TECHNOLOGY DEVELOPMENT LLC
II-5	Address	2711 Centerville Road, Suite 400 Wilmington, Delaware 19808 United States of America
II-6	State of nationality	US
II-7	State of residence	US
III-1	**Applicant and/or inventor**	
III-1-1	This person is	Applicant and inventor
III-1-2	Applicant for	US only
III-1-4	Name (LAST, First)	YIN, Xuefeng
III-1-5	Address	No. 77 Tong Ji Xin Cun, Zhang Wu Lu, Yangpu District Shanghai 200092 China
III-1-6	State of nationality	CN
III-1-7	State of residence	CN

PCT REQUEST

Print Out (Original in Electronic Form)

IV-1	**Agent or common representative; or address for correspondence**	
	The person identified below is hereby/ has been appointed to act on behalf of the applicant(s) before the competent International Authorities as:	Agent
IV-1-1	Name	KING & WOOD PRC LAWYERS
IV-1-2	Address	20th Floor, East Tower, World Financial Centre, No. 1 Dongsanhuan Zhonglu, Chaoyang District Beijing 100020 China
IV-1-3	Telephone No.	86 10 5878 5588
IV-1-4	Facsimile No.	86 10 5878 5544
IV-1-5	e-mail	patent@kingandwood.com
IV-1-5(a)	E-mail authorization The receiving Office, the International Searching Authority, the International Bureau and the International Preliminary Examining Authority are authorized to use this e-mail address to send, if the Office or Authority so wishes, advance copies of notifications in respect of this international application.	Yes
IV-1-6	Agent's registration No.	11256
V	**DESIGNATIONS**	
V-1	**The filing of this request constitutes under Rule 4.9(a), the designation of all Contracting States bound by the PCT on the international filing date, for the grant of every kind of protection available and, where applicable, for the grant of both regional and national patents.**	
VI-1	**Priority Claim**	NONE
VII-1	**International Searching Authority Chosen**	State Intellectual Property Office of the People's Republic of China (ISA/CN)

VIII	**Declarations**	Number of declarations	
VIII-1	Declaration as to the identity of the inventor	–	
VIII-2	Declaration as to the applicant's entitlement, as at the international filing date, to apply for and be granted a patent	–	
VIII-3	Declaration as to the applicant's entitlement, as at the international filing date, to claim the priority of the earlier application	–	
VIII-4	Declaration of inventorship (only for the purposes of the designation of the United States of America)	–	
VIII-5	Declaration as to non-prejudicial disclosures or exceptions to lack of novelty	–	

PCT REQUEST

Print Out (Original in Electronic Form)

IX	Check list	Number of sheets	Electronic file(s) attached
IX-1	Request (including declaration sheets)	3	✓
IX-2	Description	22	✓
IX-3	Claims	6	✓
IX-4	Abstract	1	✓
IX-5	Drawings	4	✓
IX-7	TOTAL	36	
	Accompanying Items	Paper document(s) attached	Electronic file(s) attached
IX-8	Fee calculation sheet	–	✓
IX-11	Copy of general power of attorney	–	Reference no. ZW0011042258
IX-18	PCT-SAFE physical media	–	–
IX-20	**Figure of the drawings which should accompany the abstract**	4	
IX-21	**Language of filing of the international application**	English	
X-1	**Signature of applicant, agent or common representative**	(PKCS7 Digital Signature)	
X-1-1	Name	KING & WOOD PRC LAWYERS	
X-1-2	Name of signatory	KING & WOOD PRC LAWYERS	
X-1-3	Capacity	Attorney	

FOR RECEIVING OFFICE USE ONLY

10-1	**Date of actual receipt of the purported international application**	
10-2	**Drawings:**	
10-2-1	Received	
10-2-2	Not received	
10-3	**Corrected date of actual receipt due to later but timely received papers or drawings completing the purported international application**	
10-4	**Date of timely receipt of the required corrections under PCT Article 11(2)**	
10-5	**International Searching Authority**	ISA/CN
10-6	**Transmittal of search copy delayed until search fee is paid**	

FOR INTERNATIONAL BUREAU USE ONLY

11-1	**Date of receipt of the record copy by the International Bureau**	

USER-FOCUSING TECHNIQUE FOR WIRELESS COMMUNICATION SYSTEMS

BACKGROUND

[001] Wireless communication systems confront more and more challenges. One such challenge exists in hot-spots where highly concentrated groups of mobile users create large demands of system capacity. Other challenges exist where co-located heterogeneous networks in certain areas create interference and difficulties in inter-network handover. In order to address these and other problems, various techniques have been developed, such as relay techniques and coordinated multi-point (CoMP) transmission. Both the relay and the CoMP techniques are used to increase the number of parallel channels between the source of a signal and the destination. While these techniques increase system performance, they also require careful network planning and require high computation resources. In some instances, the techniques operate by exploiting additional resources from propagation channels.

[002] Other techniques, such as equalization techniques achieve the same purposes without changing current system configurations. Equalization techniques are used in the receivers of the system in order to recover the original transmitted signal by removing any distortions that arise in the transmittal. When the impact of a channel is perfectly equalized, the signals arriving at the receiver from the different paths are then "aligned" in phases and can be added constructively. Typical examples of equalization techniques include the following: (1) RAKE receiving technique, which equalizes the channel in the delay domain; (2) the frequency equalization technique which has been widely adopted in the receivers based on OFDM transmission; and (3) the time-frequency equalization technique used in the receivers of 4G systems, such as the TD-Long-Term-Evolution (LTE) wireless communication systems.

[003] One problem with these techniques, however is that they require that channel equalization be performed at the receiver, meaning that the receiver have additional resources in order to perform the equalization.

SUMMARY

[004] In one embodiment, a method is provided for conducting wireless communications in a communications system. Such a communications system can

include a transmitter, a receiver, and a plurality of propagation paths formed between the transmitter and the receiver. The propagation paths can be configured to be capable of carrying a signal transmitted by the transmitter to the receiver. The method can include: transmitting a first signal from the transmitter to the receiver via a propagation path of the plurality of propagation paths; receiving the first signal at the receiver; performing a channel estimation of the first signal to obtain path parameter information of the propagation path; sending the path parameter information from the receiver to the transmitter via the propagation path; predistorting a second signal at the transmitter according to the path parameter information; transmitting the predistorted signal from the transmitter to the receiver via the propagation path; and receiving the predistorted signal at the receiver.

[005] In one embodiment, a communications system can be provided for conducting wireless communications. The system can include a receiver, a transmitter and a plurality of propagation paths formed between the transmitter and the receiver which are capable of carrying a signal transmitted by the transmitter to the receiver. The receiver can be configured to receive a first signal from the transmitter, perform a channel estimation of the first signal to obtain path parameter information of the propagation path, and send the path parameter information of the path to the transmitter via the propagation path. The transmitter can be configured to predistort a second signal according to the channel estimation received from the receiver, and transmit the predistorted signal to the receiver via the propagation path.

[006] In one embodiment, a base station can be provided for performing wireless communications with a receiver in a wireless device via a plurality of propagation paths. The base station can include at least one transmitter; a computing device; and a computer-readable storage medium having computer-executable instructions stored thereon that are executable by the computing device to perform operations. The computing device operations can include: transmitting a first signal from the transmitter to the receiver via a propagation path of the plurality of propagation paths; receiving a channel estimation of the first signal including path parameter information of the propagation path; predistorting a second signal according to the channel estimation; and transmitting the predistorted signal from the transmitter to the receiver via the propagation path.

[007] The foregoing summary is illustrative only and is not intended to be in any way limiting. In addition to the illustrative aspects, embodiments, and features described

above, further aspects, embodiments, and features will become apparent by reference to the drawings and the following detailed description.

BRIEF DESCRIPTION OF THE FIGURES

[008] The foregoing and following information as well as other features of this disclosure will become more fully apparent from the following description and appended claims, taken in conjunction with the accompanying drawings. Understanding that these drawings depict only several embodiments in accordance with the disclosure and are, therefore, not to be considered limiting of its scope, the disclosure will be described with additional specificity and detail through use of the accompanying drawings, in which:

[009] FIG. 1 includes a schematic representation of an embodiment of a wireless communication system which is capable of performing a user-focusing technique as described herein;

[010] FIG. 2 includes a block diagram illustrating an embodiment of a transmitter and a receiver which may be used in performing a user-focusing technique as described herein;

[011] FIG. 3 includes a diagram representing an embodiment of a computing unit of a transmitter used in performing a user-focusing technique as described herein;

[012] FIG. 4 includes a flow diagram illustrating an embodiment of a user-focusing technique in a wireless communication system;

[013] FIG. 5A includes a diagram representing a conventional wireless communication system;

[014] FIG. 5B includes a diagram representing a wireless communication system which is capable of performing a user-focusing technique as described herein; and

[015] FIG. 5C includes a diagram representing a wireless communication system according to another embodiment of a system which is capable of performing a user-focusing technique as described herein,

[016] all arranged in accordance with at least one of the embodiments described herein, and which arrangement may be modified in accordance with the disclosure provided herein by one of ordinary skill in the art.

DETAILED DESCRIPTION

[017] In the following detailed description, reference is made to the accompanying drawings, which form a part hereof. In the drawings, similar symbols typically identify

similar components, unless context dictates otherwise. The illustrative embodiments described in the detailed description, drawings, and claims are not meant to be limiting. Other embodiments may be utilized, and other changes may be made, without departing from the spirit or scope of the subject matter presented herein. It will be readily understood that the aspects of the present disclosure, as generally described herein, and illustrated in the figures, can be arranged, substituted, combined, separated, and designed in a wide variety of different configurations, all of which are explicitly contemplated herein.

[018] Figure 1 includes a schematic representation of an embodiment of a wireless communication system which is capable of performing a user-focusing technique as described herein. Figure 1 illustrates a single-link communication scenario between a base station which is configured so as to act as a transmitter 110 and a mobile station which is configured so as to act as a receiver 150. Between the transmitter 110 and the receiver 150 are a number of buildings 120-124, which act as scatterers and bouncing points of communication signals traveling between the transmitter 110 and the receiver 150 via propagation paths 170, 175, and 180.

[019] Simply speaking, the methods and systems described herein use the propagation paths 170, 175, and 180 as multiple parallel carriers of the communication signals. In most communications currently used in the art, these various propagation paths 170, 175, and 180 are usually considered to be problematic rather than being considered as a resource-bank.

[020] Using the method and systems described herein, however, the wireless connection between the transmitter 110 and the receiver 150 becomes analogous with multiple wired connections linking the two points. Using this configuration, many existing problems, e.g. the interference cancellation, capacity limitations, may be removed. The system and methods described herein are referred to as "user-focusing" and make use of multiple propagation paths 170, 175, and 180 between the transmitter 110 and receiver 150 as the parallel carriers. These paths are different in delay, direction of arrival, direction of departure and Doppler frequency. Along these paths, an electromagnetic wave may arrive at the receiver with different phases. However, in the user-focusing method and system described herein, the transmitted signal modulates the parallel carriers in such a way that the wave arriving at the receiver 150 from different paths 170, 175, and 180 have the same phase, and may be superimposed coherently.

[021] The effect when using this user-focusing technique is that the system can send the signals directly to the location of the receiver 150, i.e. create a "focus" of the signal at the receiver 150. As may be understood by one of ordinary skill in the art, this system has various benefits, including but not limited to: 1) the total transmit power may decrease because the transmitter 110 wastes no energy on sending the signals to the regions where no paths exist; 2) the interference among users can be significantly reduced and consequently, the quality of service can be improved; 3) the currently used multi-point cooperative technologies might be unnecessary, as the methods and systems described herein provides acceptable performance using just one transmitter 110.

[022] Figure 2 illustrates two block diagram illustrating exemplary components of the transmitter 110 and the receiver 150 although the transmitter 110 and receiver 150 may include other components or omit any non-essential components without varying from the scope and meaning of the claims recited below. In this example, the receiver comprises a mobile station which includes a computing unit 200 which is capable of controlling the function of the other modules 200-250 of the mobile station, a display 210 capable of displaying on or more images on the mobile station, a speaker 220 including an electroacoustic transducer that produces sound in response to an electrical audio signal input, an antenna array 230 including one or more antennas which are used to send and receive signals with the transmitter 110, a user interface which enables a user of the mobile station to manipulate and interact with the processes of the computing unit 200 so as to control the various modules 200-250 of the mobile station, and a microphone 250 configured to capture an acoustic sound and convert it into an electronic signal using an acoustic-to-electric transducer or sensor.

[023] The transmitter 110, which includes a base station in this example, includes a computing unit 300 described more fully below and an antenna array 260 comprising one or more antenna which are used to send and receive signals with the receiver 150.

[024] Figure 3 depicts a block diagram illustrating an example computing device 300 of the transmitter 110 or receiver 150 that is arranged to implement the user-focusing technique for wireless communication described more fully below. In a very basic configuration 302, the computing device 300 typically includes one or more processors 304 and a system memory 306. A memory bus 308 may be used for communicating between processor 304 and system memory 306.

[025] Depending on the desired configuration, processor 304 may be of any type including but not limited to a microprocessor (μP), a microcontroller (μC), a digital signal processor (DSP), or any combination thereof. Processor 304 may include one more levels of caching, such as a level one cache 310 and a level two cache 312, a processor core 314, and registers 316. An example processor core 314 may include an arithmetic logic unit (ALU), a floating point unit (FPU), a digital signal processing core (DSP Core), or any combination thereof. An example memory controller 318 may also be used with processor 304, or in some implementations memory controller 318 may be an internal part of processor 304.

[026] Depending on the desired configuration, system memory 306 may be of any type including but not limited to volatile memory (such as RAM), non-volatile memory (such as ROM, flash memory, etc.) or any combination thereof. System memory 306 may include an operating system 320, one or more applications 322, and program data 324. Application 322 may include an authentication component or application 326 that is arranged or configured to construct an authentication system or authenticate one or more devices or users. Program data 324 may include authentication data 328 for constructing an authentication system and/or authenticating one or more devices or users. In some embodiments, application 322 may be arranged to operate with program data 324 on operating system 320 such that an authentication system is generated. This described basic configuration 302 is illustrated in Figure 3 by those components within the inner dashed line.

[027] Computing unit 300 may have additional features or functionality, and additional interfaces to facilitate communications between basic configuration 302 and any required devices and interfaces. For example, a bus/interface controller 330 may be used to facilitate communications between basic configuration 302 and one or more data storage devices 332 via a storage interface bus 334. Data storage devices 332 may be removable storage devices 336, non-removable storage devices 338, or a combination thereof. Examples of removable storage and non-removable storage devices include magnetic disk devices such as flexible disk drives and hard-disk drives (HDD), optical disk drives such as compact disk (CD) drives or digital versatile disk (DVD) drives, solid state drives (SSD), and tape drives to name a few. Example computer storage media may include volatile and nonvolatile, removable and non-removable media implemented in any

method or technology for storage of information, such as computer readable instructions, data structures, program modules, or other data.

[028] System memory 306, removable storage devices 336 and non-removable storage devices 338 are examples of computer storage media. Computer storage media includes, but is not limited to, RAM, ROM, EEPROM, flash memory or other memory technology, CD-ROM, digital versatile disks (DVD) or other optical storage, magnetic cassettes, magnetic tape, magnetic disk storage or other magnetic storage devices, or any other medium which may be used to store the desired information and which may be accessed by computing device 300. Any such computer storage media may be part of computing device 300.

[029] Computing device 300 may also include an interface bus 340 for facilitating communication from various interface devices (e.g., output devices 342, peripheral interfaces 344, and communication devices 346) to basic configuration 302 via bus/interface controller 330. Example output devices 342 include a graphics processing unit 348 and an audio processing unit 360, which may be configured to communicate to various external devices such as a display or speakers via one or more A/V ports 362. Example peripheral interfaces 344 include a serial interface controller 364 or a parallel interface controller 366, which may be configured to communicate with external devices such as input devices (e.g., keyboard, mouse, pen, voice input device, touch input device, etc.) or other peripheral devices (e.g., printer, scanner, etc.) via one or more I/O ports 368. An example communication device 346 includes a network controller 360, which may be arranged to facilitate communications with one or more other computing devices 362 over a network communication link via one or more communication ports 364.

[030] The network communication link may be one example of a communication media. Communication media may typically be embodied by computer readable instructions, data structures, program modules, or other data in a modulated data signal, such as a carrier wave or other transport mechanism, and may include any information delivery media. A "modulated data signal" may be a signal that has one or more of its characteristics set or changed in such a manner as to encode information in the signal. By way of example, and not limitation, communication media may include wired media such as a wired network or direct-wired connection, and wireless media such as acoustic, radio frequency (RF), microwave, infrared (IR) and other wireless media. The term computer

readable media as used herein may include both storage media and communication media.

[031] In addition to being a component of the transmitter 110 base station, the computing unit 300 may be implemented as a portion of a small-form factor portable (or mobile) electronic device such as a cell phone, a personal data assistant (PDA), a personal media player device, a wireless web-watch device, a personal headset device, an application specific device, or a hybrid device that include any of the above functions. As such, the computing unit 200 of the receiver 150 configured as a mobile station may include the same or similar components as the computing device 300. Additionally, the computing device 300 may also be implemented as a personal computer including both laptop computer and non-laptop computer configurations.

[032] One skilled in the art will appreciate that, for this and other processes and methods disclosed herein, the functions performed in the processes and methods may be implemented in differing order. Furthermore, the outlined steps and operations are only provided as examples, and some of the steps and operations may be optional, combined into fewer steps and operations, or expanded into additional steps and operations without detracting from the essence of the disclosed embodiments.

[033] The foregoing detailed description has set forth various embodiments of the devices and/or processes via the use of block diagrams, flowcharts, and/or examples. Insofar as such block diagrams, flowcharts, and/or examples contain one or more functions and/or operations, it will be understood by those within the art that each function and/or operation within such block diagrams, flowcharts, or examples can be implemented, individually and/or collectively, by a wide range of hardware, software, firmware, or virtually any combination thereof. In one embodiment, several portions of the subject matter described herein may be implemented via Application Specific Integrated Circuits (ASICs), Field Programmable Gate Arrays (FPGAs), digital signal processors (DSPs), or other integrated formats. However, those skilled in the art will recognize that some aspects of the embodiments disclosed herein, in whole or in part, can be equivalently implemented in integrated circuits, as one or more computer programs running on one or more computers (e.g., as one or more programs running on one or more computer systems), as one or more programs running on one or more processors (e.g., as one or more programs running on one or more microprocessors), as firmware, or as virtually any combination thereof, and that designing the circuitry and/or writing the code

for the software and or firmware would be well within the skill of one of skill in the art in light of this disclosure. In addition, those skilled in the art will appreciate that the mechanisms of the subject matter described herein are capable of being distributed as a program product in a variety of forms, and that an illustrative embodiment of the subject matter described herein applies regardless of the particular type of signal bearing medium used to actually carry out the distribution. Examples of a signal bearing medium include, but are not limited to, the following: a recordable type medium such as a floppy disk, a hard disk drive, a CD, a DVD, a digital tape, a computer memory, etc.; and a transmission type medium such as a digital and/or an analog communication medium (e.g., a fiber optic cable, a waveguide, a wired communications link, a wireless communication link, etc.).

[034] Those skilled in the art will recognize that it is common within the art to describe devices and/or processes in the fashion set forth herein, and thereafter use engineering practices to integrate such described devices and/or processes into data processing systems. That is, at least a portion of the devices and/or processes described herein can be integrated into a data processing system via a reasonable amount of experimentation. Those having skill in the art will recognize that a typical data processing system generally includes one or more of a system unit housing, a video display device, a memory such as volatile and non-volatile memory, processors such as microprocessors and digital signal processors, computational entities such as operating systems, drivers, graphical user interfaces, and applications programs, one or more interaction devices, such as a touch pad or screen, and/or control systems including feedback loops and control motors (e.g., feedback for sensing position and/or velocity; control motors for moving and/or adjusting components and/or quantities). A typical data processing system may be implemented utilizing any suitable commercially available components, such as those typically found in data computing/communication and/or network computing/communication systems.

[035] The herein described subject matter sometimes illustrates different components contained within, or connected with, different other components. It is to be understood that such depicted architectures are merely exemplary, and that in fact many other architectures can be implemented which achieve the same functionality. In a conceptual sense, any arrangement of components to achieve the same functionality is effectively "associated" such that the desired functionality is achieved. Hence, any two components herein combined to achieve a particular functionality can be seen as "associated with"

each other such that the desired functionality is achieved, irrespective of architectures or intermedial components. Likewise, any two components so associated can also be viewed as being "operably connected", or "operably coupled", to each other to achieve the desired functionality, and any two components capable of being so associated can also be viewed as being "operably couplable", to each other to achieve the desired functionality. Specific examples of operably couplable include but are not limited to physically mateable and/or physically interacting components and/or wirelessly interactable and/or wirelessly interacting components and/or logically interacting and/or logically interactable components.

[036] Returning to Figure 1, as understood by one of ordinary skill in the art, the impulse response of the propagation channel can be viewed as the superposition of multiple specular propagation paths 170, 175, and 180 between a transmitter 110 and a receiver 150 .

[037] As previously described with reference to Figure 1, there are multiple propagation paths 170, 175, and 180 between the transmitter 110 and the receiver 150 wherein the signal, comprising an electromagnetic wave may bounce off the various buildings or bouncing points 120-124. The interactions between the electromagnetic wave and the bouncing points 120-124 can be reflection, diffraction or scattering. The signals radiated from the transmitter 110 experience different distortions along these propagation paths 170, 175, and 180. The resulting multiple replica of the original transmitted signals are added at the receiver 150, either destructively or constructively.

[038] Typically, equalization techniques known in the art are used in the receivers 150 to recover the original transmitted signal by removing the distortions. After the impact of channel is perfectly equalized, the signals arriving at the receiver 150 from different propagation paths 170, 175, and 180 are “aligned” in phases and added constructively.

[039] Typical examples of equalization techniques include: 1) the RAKE receiving technique, which equalizes the channel in the delay domain; 2) the frequency equalization technique, widely adopted in the receivers based on OFDM transmission; and 3) the time-frequency equalization technique used in the receivers of 4G systems, such as the TD-LTE (Long-Term-Evolution) wireless communication systems.

[040] As described more fully below with reference to Figure 4, unlike the equalization technique which corrects the distortion at the receiver 150 after receiving the signals, the user-focusing technique adds pseudo “distortion” before the signals are transmitted at the

transmitter 110. These "pre-distorted" signals are then transmitted in such a way that the signal distortion can be successfully removed while propagating.

[041] More specifically, as shown in Figure 4, the method begins at 410 where a channel estimation of a first signal is performed so as to obtain path parameter information of the propagation path 170, 175, or 180. During this process, a transmitter transmits 420 a first signal from the transmitter 110 to the receiver 150. In one embodiment the first signal comprises distorted preambles or training sequences transmitted from the transmitter 110. After the first signal is received 430 at the receiver 150, a channel estimation algorithm is performed to obtain the estimates of the delay τ, the Doppler frequency υ, direction of arrival Ω_1, direction of departure Ω_2, and complex amplitude α for each of the propagation paths 170, 175, and 180.

[042] Various channel estimations may be used, including the SAGE algorithm. Other algorithms for estimating the parameters include Maximum likelihood estimation algorithms including the specular-path-based maximum likelihood method. One drawback of the maximum likelihood algorithm, however is that it results in high complexity in many instances. However, when the generic model is correctly chosen, the obtained parameter estimates have higher accuracy than those obtained by using other methods.

[043] Other examples of channel estimations which may be used include Spectral-based methods, including the Bartlett beamformer, the Capon beamformer, and the MUSIC (MUltiple SIgnal Classification) method. These methods are used to compute the power spectrum of the channel in multiple dimensions, e.g. in the delay, Doppler frequency and directions. These methods can return estimates of the path parameters with low complexity. They are practical and much more appropriate for real implementation than the maximum-likelihood based estimation methods.

[044] Still another channel estimation algorithm which may be used in association with the non-spectral-based method are Subspace-based techniques, such as the root-MUSIC technique, and the ESPRIT (Estimation of Signal Parameters based on Rotational-Invariance Technique) algorithm, as well as the extension of these algorithms, e.g. Propagator method and Unitary-ESPRIT technique. These algorithms have high accuracy, but because the input of these algorithms are the observations of channel from multiple independent snapshots in order to avoid the singularity issue of the covariance matrix of

received signals, data must be collected from multiple frames in a relatively long time window.

[045] Approximation of the maximum-likelihood method based on iterative schemes may also be used at step 410. These algorithms include the expectation-maximization (EM) method, the space-alternating generalized Expectation-maximization (SAGE) technique and the so-called RiMAX (Richter's maximum likelihood estimation) method.

[046] Alternatively, methods based on LSE (least-square-error) principles, such as the LMMSEE (Least minimum mean squared estimation error) estimator, and the covariance matrix fitting technique may also be used.

[047] Furthermore, new algorithms for estimating path parameters, which probably have not been disclosed, can also be used in our case. For example, the maximum-a-posterior based methods, the Bayesian techniques, might also be considered as important elements in the pre-distorting technique. Additionally, besides the estimation techniques, tracking algorithms may be used to get the estimates of path parameters, such as the Kalman filtering technique, the enhanced Kalman filtering technique, the particle filtering technique, the particle-filter based SAGE algorithm, etc.

[048] Next, at 440 the receiver 150 feedbacks these path parameter information to the transmitter 110 via the propagation path 170, 175, or 180. This feedback operation can be performed according to the existing protocols in wireless communication systems.

[049] Then, at 450 for the next frame or block to transmit, the transmitter "pre-distorts" a second signal and generates multiple signal replica with appropriate settings of the transmitting time, transmitting pace and directions, receiving directions and complex weight of the signal. These settings are determined by the parameters of paths fed-back from the receiver at 440. These distorted replica are summed up and transmitted 460 from the transmitter 110 to the receiver 150. The signal is then received 470 at the receiver 150.

[050] In order to illustrate method and by way of example, the two propagation paths 170 and 180 of Figure 1 may be compared. The two paths 170 and 180 each exhibit different delays (because of the different path lengths), different directions of departure and of arrival (due to the different locations of the scatterers 120 and 122) and distinctive Doppler frequency (due to the movement of the receiver 150 and the different constellation of the paths).

[051] In this example, $(\Omega_{i,1},\Omega_{i,2},\upsilon_i,\tau_i)$ correspond to the direction of departure, direction of arrival, delay, and Doppler frequency of path 170 and 180, respectively, where path 170 corresponds to i=1 and path 180 corresponds to i=2. In the instance where there are M antennas in the antenna array 260 of the transmitter 110 and N antennas in the antenna array 230 of the receiver 150, a $M \times N$ replica of the transmitted signal is created at step 450 using the path parameter information sent to the transmitter 110 at 450 such that:

[052] $\alpha_i^* \exp(-j2\pi(f-v_i)\tau_i)\mathbf{c}_{Tx}^*(\Omega_{1,i}) \otimes \mathbf{c}_{Rx}^*(\Omega_{1,i})u(f)$, for i=1,2,

[053] Where $\mathbf{c}_{Tx}^*(\Omega_1)$ denotes the complex conjugate of the transmitter antenna array 260 response at the direction Ω_1, $\mathbf{c}_{Rx}^*(\Omega_1)$ denotes the complex conjugate of the receiver antenna array 230 response at the direction Ω_2, *u(f)* represents the transmitted signal represented in the frequency domain, * represents the complex conjugate, and $\otimes$ denotes Kronecker product. Notice that $\mathbf{c}_{Tx}^*(\Omega_1)$ and $\mathbf{c}_{Rx}^*(\Omega_1)$ are M x 1 and N x 1 column vectors, respectively. Then the combined signal *x(f)* is calculated by summing up the $M \times N$ signal replica. After that, the inverse Fourier transformation is applied to obtain the representation of *x(t)* in time domain, i.e.

[054] $x(t) = F^{-1}[x(f)]$,

[055] where F^{-1} denotes the inverse Fourier transformation.

[056] As described more fully below, one benefit of the method and systems described herein is that a conventional equalization process in the conventional receiver is not needed anymore, because the pre-distortion can be removed automatically by the propagation channel, i.e. the channel itself works as an equalizer. The signals propagating along different paths are completely aligned with the same phase when they arrive at the receiver 150, and thus, can be added constructively. The received signal in baseband representation can be directly sent to the demodulation block for further processing.

[057] One aspect of the method is that the training sequence is not "pre-distorted." This is because the receiver 150 requires that the training sequence be distorted by propagation in order to estimate the parameters of the propagation paths.

[058] As may be understood by one of skill in the art, the use-focusing technique can be tailored to suffice different application purposes. Whether these parameters may be advantageous can depend on the objective of introducing the user-focusing technique. For example, the information of the delays of individual paths is required when the user-focusing is used to synchronize the transmission through different paths in frequency

domains. Similarly the Doppler frequency is required when the synchronization is demanded in the time domain; the directions of departure are required when the signals are to be aligned in the input of multiple antennas in the transmitter side; the directions of arrival can be used when synchronization is performed at the output of the multiple antennas in the receiver side. Hence, depending on the requirements of the system, more or fewer parameters may be used in order to perform the pre-distorting described above, and the use of the parameters described herein may be modified without departing from the scope of the disclosure.

[059] Furthermore, it is possible to make use of new parameters for achieving more levels of user-focusing. For example, the polarization status of the propagation path can be used to achieve polarization synchronization, which leads to a new application of the user-focusing technique, i.e. focusing on specific users in polarization domains.

[060] Alternatively, the parameters regarding the system responses, rather than the propagation channels may be used. When multiple systems are used to make a focus on the same user, it may be beneficial to include the characteristics of these systems, in order to remove the impact of the systems. These parameters regarding the system response can be the excess processing delay time, phase noises, etc.

[061] Figures 5A-5C illustrate comparisons of the embodiments described herein to a conventional communication chain.

[062] Figure 5A depicts the modification that can be implemented in the conventional communication system when the user-focusing technique is applied. In the conventional configuration, the transmitter 500 includes modulation blocks 510 a RF front end 520 and antennas 505a and 505b. The receiver 550 includes a RF front end 530 a channel estimation module 535, antennas 545a and 545b and a channel equalization module 540.

[063] By way of comparison, Figure 5B illustrates the transmitter 575 and receiver 580 according to the technology described herein. As described above, because the embodiments described herein utilize a pre-distortion technique performed in a modulation and pre-distortion block of the transmitter 575, there is no need for the channel equalization block 540, as required in receiver 550.

[064] In another embodiment shown Figure 5C, the receiver 550 may be used to perform channel equalization in addition to the transmitter performing pre-distortion using a modulation and pre-distortion block 560.

[065] In the following, we compare the user-focusing technique described herein with the other conventional techniques currently known to one of ordinary skill in the art. As may be understood, the methods and systems described herein offer benefits not currently available using the configurations currently known to one of ordinary skill in the art.

A. Comparison to the Coherent-Combination in the Joint-Processing Technique Proposed for the CoMP System Specified in 3GPP.

[066] For the future generation wireless communications, such as the LTE-Advanced systems, coordinated multiple-point (CoMP) transmission techniques will be used to improve the coverage of high-data rate in the cell edge. One of the technique used by CoMP is the "joint processing (JP)". In the 3GPP technical standard, the word "coherent adding" is used to indicate that the signals originated by different transmitters are combined constructively in the receiver. In our opinion, this "coherent adding" is an extension of the standard channel equalization techniques used in single link wireless communication to the multi-link scenario, i.e. the impact of the channels between the multiple transmitters and the receiver should be removed by equalization.

[067] This channel equalization process is different from the principle of the user-focusing technique described herein, which pre-distorts the transmitted signals in such a way that the channel's effect is automatically equalized during the propagation. Furthermore, as described with Figure 5C above, it is possible to utilize the user-focusing technique in the CoMP scenario, where every transmitter 575 uses the user-focusing technique to transmit pre-distorted signals while a separate channel equalization process is performed at the receiver 550.

[068] As such, it is possible to use both equalization technique and pre-distorted technique at in the same system. As explained before, the equalization technique is used in the receiver 150, while the pre-distortion is applied in the transmitter 110. When the pre-distorted technique is used, the complexity of the equalization may be significantly reduced in the receiver 150.

[069] For example, in an instance where the receiver 150 is moving at the speed of 350km/h, the channel equalization block 540 of the receiver, such as the GSM terminals, is normally only able to support the communication when the moving speed is up to 200km/h. So when the user terminal moves beyond 200km/h, the communications become highly unstable. In order to maintain communication without significantly modifying the receiver 150, the user-focusing technique described herein may be

implemented in the transmitter 110 by pre-distorting the signals in such a way that the signal received in the receiver 150 is similar with those observed when the user equipment moves at the speed below 200km/h. So in this example, the equalization and pre-distortion techniques may be jointly used. Thus, the ability to distribute the complexity of coping channels in harsh conditions.

[070] In another example, the receiver 150 may be configured as a part of a standard mobile phone where equalization is used, but where the mobile terminal is equipped with a single antenna, rather than multiple antennas, preventing its ability to do spatial equalization. However, the channel around the mobile terminal is still directive, meaning that the impinging waves exhibit different directions of arrival or directions of departure. The user-focusing technique may then be used to enforce the signals coming from different directions towards the receiver 150 to "focus" on the receiver 150. Assuming that the transmitter 110 has multiple antennas in its antenna array 260, and that the transmitter 110 knows the directions of departure of certain propagation paths 170, 175, and 180 between the transmitter 110 and the receiver 150, the pre-distortion is added in the transmitter 110 to remove the selectivity in the space in proximity of the transmitter 110. This operation, although not completely removing the spatial selectivity, can mitigate the impact of the multipath on the receiver 150.

[071] In summary, depending on the capability of the transmitter 110 and the receiver 150 in the communication system, the pre-distortion and equalization can be implemented in different domains and be used at the same time.

B. <u>Comparison to Precoding Techniques</u>

[072] The systems and methods described herein can make use of the concept of "pre-distortion," which has significant difference from the conventional precoding techniques. The latter can make use of simplified representations of channel, e.g. in terms of code-book, while the system and methods described above make use of the parameters of the propagation channel, e.g. the delay, Doppler frequencies, directions of departure and directions of arrival. This full-dimensional parametric description of the channel can be much more accurate than using the codebooks. Furthermore, only by using the precise channel parameters, synchronization of the signals to form a "focus" on specific user can be possible. The conventional precoding techniques cannot be used to create a concentration of the signal at a certain point (which can move) in space.

C. <u>Comparison to the SDMA Technique</u>

[073] The smart antenna of the SDMA (spatial division multiplexing address) technique can make use of SDMA technique to direct the beam to the certain directions. However, in SDMA, there is no concept of pre-distortion of the signals in time, frequency and space domains, as described above. Furthermore, embodiments described herein require that the propagation paths be differentiable in the directions, and also in the delay, Doppler frequency. By conducting the pre-distortion in time, frequency and space jointly, the method described above is able to create a focus of the signal following a moving point in an environment with multi-path richness.

D. Comparison to the Multipath-Based Channel Simulation Technique

[074] The geometrical stochastic channel models (GSCM) are widely used for simulating the propagation channel when performing conformity test for e.g. the IMT-Advanced systems. In these models, multiple paths characterized by delay, Doppler, directions and polarizations are added to reproduce the time-variant channels. While the user-focusing system and methods described herein utilize multiple propagation paths, the concept of per-path-modulation and the pre-distortion method are different from the method used the GSCM-based channel simulation.

E. Comparison to Pre-Equalization Techniques

[075] The user-focusing system and methods described herein pre-distort transmitted signals in 3 dimensions, i.e. time, frequency and spatial domains. Furthermore, it can be beneficial to point out that the parameters considered for pre-distorting are delays, Doppler frequencies and directions of arrival and of departure of multiple propagation paths, rather than the "taps", allowing for counteracting the phase drifting in time, frequency and space samples.

[076] Furthermore, the pre-equalization techniques usually rely on the structure of finite impulse response (FIR) filter, while the user-focusing systems and methods described herein use individual propagation path without requiring a finite impulse response. Additionally, while the pre-equalization technique aims at removing the inter-symbol-interferences (ISI) in the frequency and spatial domains, the user-focusing systems and methods remove the ISI in time, frequency and spatial domains. This enables the user-focusing technique to be performed in time-variant cases in environments with rapidly changing channels, while the pre-equalization technique is only applicable in the fixed wireless, wireless local loop systems.

[077] The user-focusing technique can be used in conventional wireless communication systems, future generation of wireless communication systems, such as the Long-Term-evolution (LTE)-Advanced, the ad-hoc wireless network, e.g. the vehicular wireless networks, as well as in the contexts of non-communication applications, such as power transferring, no-harm operation, and sensor networks. So it is valuable to the equipment manufacturers, designers, research and developing companies in these areas.

[078] In addition to the embodiments described above, the methods described herein can be applied to a variety of existing communications systems. By way of illustration, the following are examples of scenarios where the user-focusing technique described above may be used:

[079] Example 1: Communications systems including single transmitter and single receiver MIMO scenarios. The user-focusing technique can be used in the system with one transmitter and one receiver. Compared with the systems without the user-focusing technique, the new system can support higher throughput, and may work more stably in the environments with poor channels.

[080] Example 2: Communication systems including multiple transmitter and single receiver SISO (single-input single-output) scenarios. The user-focusing technique can be implemented in the transmitter side. When the transmitters are synchronized in time and frequencies, the transmitters can coordinate in such a way that the signals coming from difference transmitters will not exhibit transmitting selectivity. This can help build e.g. the Coordinated Multiple-Point (CoMP) systems.

[081] Example 3: Communication systems including multiple transmitter and multiple receiver SISO scenarios. When multiple receivers are present in the network, the user-focusing technique can also be implemented when the channels among the transmitter and the receivers are known.

[082] Example 4: Communication systems including multiple transmitter and multiple receiver MIMO scenarios. The user-focusing technique can utilize the directional channel properties when the MIMO configuration is considered.

[083] Example 5: Broadcasting scenarios with known channels between the broadcasting station and the receiver.

[084] Example 6: Broadcasting with multiple base stations in a single network.

[085] Example 7: Remote sensing. The user-focusing technique allows the electromagnetic waves to focus on certain point, which might be stationary or moving, in

the 3-D or even 4-D, when time is considered as an additional dimension. This feature makes the technique applicable to monitor the changes at specific locations in real environments.

[086] Example 8: Remote charging. The user-focusing technique can concentrate the energy transmitted at specific receiving location. When there is certain equipment located at specific places, the transmitter can use multiple channels to transfer the energy to the equipment. The energy in the electromagnetic field focused on specific points can be transferred to other kinds of energy in desired forms, such as thermal and electric energy, thus making operations, e.g. remote charging, possible.

[087] The above mentioned applications are all based on combining the user-focusing technique with existing systems. The advantages of the systems augmented with user-focusing functions are the increased energy-usage-efficiency, better and robust performance. Furthermore, for communications systems, if the user-focusing technique is used, the cost of constructing a system might be reduced since deploying base stations can be done in a more flexible way. This is owing to the inherent property of the user-focusing technique, i.e. the resources in the environment are fully exploited for achieving specific goals.

[088] Hence, the user-focusing methods and systems described herein have various advantages including removal of the fast fading effect of the signals by compensating the delays, Doppler frequencies, direction of arrival and direction of departure of the propagation paths. This can significantly reduce the burden of developing advanced receivers in communication systems.

[089] Additionally, the systems and methods described herein make use of the parameters of propagation instead of the simplified channel status information, and thus, the focus resulted can be highly concentrated. The interference cancellation is much more efficient by using the user-focusing than the conventional methods relying on e.g. the precoding techniques.

[090] Furthermore, the user-focusing technique can be generalized and used for many purposes other than wireless communications, such as wireless power transferring to specific points, wireless charging of battery at remote positions, and accurate point-point wireless connection in the area where the users are very dense.

[091] Also, the methods and systems described herein save power, as the transmission is conducted in a very efficient manner. No energy is wasted on non-existing propagation paths.

[092] Finally, the systems and methods described herein are easily implemented because the modification is mainly including the pre-distortion function in the transmitter side. With respect to the use of substantially any plural and/or singular terms herein, those having skill in the art can translate from the plural to the singular and/or from the singular to the plural as is appropriate to the context and/or application. The various singular/plural permutations may be expressly set forth herein for sake of clarity.

[093] In an illustrative embodiment, any of the operations, processes, etc. described herein can be implemented as computer-readable instructions stored on a computer-readable medium. The computer-readable instructions can be executed by a processor of a mobile unit, a network element, and/or any other computing device.

[094] There is little distinction left between hardware and software implementations of aspects of systems; the use of hardware or software is generally (but not always, in that in certain contexts the choice between hardware and software can become significant) a design choice representing cost vs. efficiency tradeoffs. There are various vehicles by which processes and/or systems and/or other technologies described herein can be effected (e.g., hardware, software, and/or firmware), and that the preferred vehicle will vary with the context in which the processes and/or systems and/or other technologies are deployed. For example, if an implementer determines that speed and accuracy are paramount, the implementer may opt for a mainly hardware and/or firmware vehicle; if flexibility is paramount, the implementer may opt for a mainly software implementation; or, yet again alternatively, the implementer may opt for some combination of hardware, software, and/or firmware. The modules recited herein can include hardware and/or software.

[095] The present disclosure is not to be limited in terms of the particular embodiments described in this application, which are intended as illustrations of various aspects. Many modifications and variations can be made without departing from its spirit and scope, as will be apparent to those skilled in the art. Functionally equivalent methods and apparatuses within the scope of the disclosure, in addition to those enumerated herein, will be apparent to those skilled in the art from the foregoing descriptions. Such modifications and variations are intended to fall within the scope of the appended claims.

The present disclosure is to be limited only by the terms of the appended claims, along with the full scope of equivalents to which such claims are entitled. It is also to be understood that the terminology used herein is for the purpose of describing particular embodiments only, and is not intended to be limiting.

[096] With respect to the use of substantially any plural and/or singular terms herein, those having skill in the art can translate from the plural to the singular and/or from the singular to the plural as is appropriate to the context and/or application. The various singular/plural permutations may be expressly set forth herein for sake of clarity.

[097] It will be understood by those within the art that, in general, terms used herein, and especially in the appended claims (e.g., bodies of the appended claims) are generally intended as “open” terms (e.g., the term “including” should be interpreted as “including but not limited to,” the term “having” should be interpreted as “having at least,” the term “includes” should be interpreted as “includes but is not limited to,” etc.). It will be further understood by those within the art that if a specific number of an introduced claim recitation is intended, such an intent will be explicitly recited in the claim, and in the absence of such recitation no such intent is present. For example, as an aid to understanding, the following appended claims may contain usage of the introductory phrases "at least one" and "one or more" to introduce claim recitations. However, the use of such phrases should not be construed to imply that the introduction of a claim recitation by the indefinite articles "a" or "an" limits any particular claim containing such introduced claim recitation to embodiments containing only one such recitation, even when the same claim includes the introductory phrases "one or more" or "at least one" and indefinite articles such as "a" or "an" (e.g., “a” and/or “an” should be interpreted to mean “at least one” or “one or more”); the same holds true for the use of definite articles used to introduce claim recitations. In addition, even if a specific number of an introduced claim recitation is explicitly recited, those skilled in the art will recognize that such recitation should be interpreted to mean at least the recited number (e.g., the bare recitation of "two recitations," without other modifiers, means at least two recitations, or two or more recitations). Furthermore, in those instances where a convention analogous to “at least one of A, B, and C, etc.” is used, in general such a construction is intended in the sense one having skill in the art would understand the convention (e.g., “ a system having at least one of A, B, and C” would include but not be limited to systems that have A alone, B alone, C alone, A and B together, A and C together, B and C together, and/or

A, B, and C together, etc.). In those instances where a convention analogous to "at least one of A, B, or C, etc." is used, in general such a construction is intended in the sense one having skill in the art would understand the convention (e.g., " a system having at least one of A, B, or C" would include but not be limited to systems that have A alone, B alone, C alone, A and B together, A and C together, B and C together, and/or A, B, and C together, etc.). It will be further understood by those within the art that virtually any disjunctive word and/or phrase presenting two or more alternative terms, whether in the description, claims, or drawings, should be understood to contemplate the possibilities of including one of the terms, either of the terms, or both terms. For example, the phrase "A or B" will be understood to include the possibilities of "A" or "B" or "A and B."

[098] In addition, where features or aspects of the disclosure are described in terms of Markush groups, those skilled in the art will recognize that the disclosure is also thereby described in terms of any individual member or subgroup of members of the Markush group.

[099] As will be understood by one skilled in the art, for any and all purposes, such as in terms of providing a written description, all ranges disclosed herein also encompass any and all possible subranges and combinations of subranges thereof. Any listed range can be easily recognized as sufficiently describing and enabling the same range being broken down into at least equal halves, thirds, quarters, fifths, tenths, etc. As a non-limiting example, each range discussed herein can be readily broken down into a lower third, middle third and upper third, etc. As will also be understood by one skilled in the art all language such as "up to," "at least," and the like include the number recited and refer to ranges which can be subsequently broken down into subranges as discussed above. Finally, as will be understood by one skilled in the art, a range includes each individual member. Thus, for example, a group having 1-3 cells refers to groups having 1, 2, or 3 cells. Similarly, a group having 1-5 cells refers to groups having 1, 2, 3, 4, or 5 cells, and so forth.

[0100] From the foregoing, it will be appreciated that various embodiments of the present disclosure have been described herein for purposes of illustration, and that various modifications may be made without departing from the scope and spirit of the present disclosure. Accordingly, the various embodiments disclosed herein are not intended to be limiting, with the true scope and spirit being indicated by the following claims. All references recited herein are incorporated herein by specific reference in their entirety.

CLAIMS

1. A method for wireless communication in a system including a transmitter, a receiver, and a plurality of propagation paths formed between the transmitter and the receiver which are capable of carrying a signal transmitted by the transmitter to the receiver, the method comprising:

transmitting a first signal from the transmitter to the receiver via a propagation path of the plurality of propagation paths;

receiving the first signal at the receiver;

performing a channel estimation of the first signal to obtain path parameter information of the propagation path;

sending the channel estimation from the receiver to the transmitter via the propagation path;

predistorting a second signal at the transmitter according to the channel estimation;

transmitting the predistorted signal from the transmitter to the receiver via the propagation path; and

receiving the predistorted signal at the receiver.

2. The method of claim 1, wherein the path parameter information of the propagation path includes at least one of an estimation of a delay, an estimation of a Doppler frequency, an estimation of a direction of arrival, an estimation of a direction of departure, and a complex amplitude of the propagation path.

3. The method of claim 2, wherein the path parameter information of the propagation path further includes an estimation of a polarization status of the propagation path.

4. The method of claim 1, wherein the parameter path information is obtained by at least one estimation technique of the group consisting of a maximum likelihood estimation algorithm, periodogram, correlatorgram, spectral-based methods, Bartlett beamformers, Capon beamformers, subspace –based techniques, MUSIC (MUltiple SIgnal Classification), ESPRIT (Estimation of Signal Parameters via Rotational

Invariance Techniques), approximation of the maximum-likelihood method based on iterative schemes, SAGE (Space-Alternating Generalized Expectation-maximization), RiMAX (Richter's Maximum Likelihood method), maximum-a-posteriori based methods, Evidence Framework, Bayesian techniques, tracking algorithms, the Kalman filtering techniques, enhanced Kalman filtering techniques, particle filtering techniques, and least-square-error methods.

5. The method of claim 1, wherein the transmitter and the receiver are each comprised of multiple antennas in a multiple-input and multiple-output (MIMO) wireless communication system.

6. The method of claim 1, wherein the transmitter and the receiver are each comprised of a single antenna in a single-input and single-output (SISO) wireless communication system.

7. The method of claim 1, the method further comprising:

performing a system response estimation of the first signal to obtain parameter information of the communication system;

sending the system estimation from the receiver to the transmitter via the propagation path; and

predistorting a second signal at the transmitter according to the system estimation.

8. The method of claim 1, further comprising: equalizing the predistorted signal at the receiver.

9. The method of claim 8, wherein equalizing the predistorted signal is performed using at least one of the group consisting of a joint processing technique in a coordinated multiple-point (CoMP) system.

10. The method of claim 1, wherein the transmitter is a base station and the receiver is a mobile device.

11. The method of claim 1, wherein the system comprises a plurality of receivers and a plurality of transmitter, and wherein the plurality of propagation paths are formed between the plurality of transmitters and the plurality of receivers.

12. A system for wireless communication comprising:

a receiver;

a transmitter; and

a plurality of propagation paths formed between the transmitter and the receiver which are capable of carrying a signal transmitted by the transmitter to the receiver,

wherein the receiver is configured to receive a first signal from the transmitter, perform a channel estimation of the first signal to obtain path parameter information of the propagation path, and send the channel estimation to the transmitter via the propagation path, and

wherein the transmitter is configured to predistort a second signal according to the channel estimation received from the receiver and transmit the predistorted signal to the receiver via the propagation path.

13. The system of claim 12, wherein the path parameter information of the propagation path includes at least one of an estimation of a delay, an estimation of a Doppler frequency, an estimation of a direction of arrival, an estimation of a direction of departure, and a complex amplitude of the propagation path.

14. The system of claim 12, wherein the path parameter information of the propagation path further includes an estimation a polarization status of the propagation path.

15. The system of claim 12, wherein the parameter path information is obtained by at least one estimation technique of the group consisting of a maximum likelihood estimation algorithm, periodogram, correlatorgram, spectral-based methods, Bartlett beamformers, Capon beamformers, subspace –based techniques, MUSIC (MUltiple SIgnal Classification), ESPRIT (Estimation of Signal Parameters via Rotational Invariance Techniques), approximation of the maximum-likelihood method based on iterative schemes, SAGE (Space-Alternating Generalized Expectation-

maximization), RiMAX (Richter's Maximum Likelihood method), maximum-a-posteriori based methods, Evidence Framework, Bayesian techniques, tracking algorithms, the Kalman filtering techniques, enhanced Kalman filtering techniques, particle filtering techniques, and least-square-error methods.

16. The system of claim 12, wherein the transmitter and the receiver are each comprised of multiple antennas in a multiple-input and multiple-output (MIMO) wireless communication system.

17. The system of claim 12, wherein the transmitter and the receiver are each comprised of a single antenna in a single-input and single-output (SISO) wireless communication system.

18. The system according to claim 12,wherein the receiver is further configured to perform a system response estimation of the first signal to obtain parameter information of the communication system and send the system estimation from the receiver to the transmitter via the propagation path, and

wherein the transmitter is further configured to predistort the second signal according to the system estimation.

19. The system according to claim 12, wherein the receiver is further configured to equalize the predistorted signal.

20. The system according to claim 12, wherein the transmitter is a base station and the receiver is a mobile device.

21. A base station for performing wireless communication with a receiver in a wireless device via a plurality of propagation paths, the base station comprising:

at least one transmitter;

a computing device; and

a computer-readable storage medium having computer-executable instructions stored thereon that are executable by the computing device to perform operations comprising:

transmitting a first signal from the transmitter to the receiver via a propagation path of the plurality of propagation paths;

receiving a channel estimation of the first signal including path parameter information of the propagation path;

predistorting a second signal according to the channel estimation; and

transmitting the predistorted signal from the transmitter to the receiver via the propagation path.

22. The base station of claim 21, wherein the path parameter information of the propagation path includes at least one of an estimation of a delay, an estimation of a Doppler frequency, an estimation of a direction of arrival, an estimation of a direction of departure, and a complex amplitude of the propagation path.

23. The base station of claim 21, wherein the path parameter information of the propagation path further includes an estimation of a polarization status of the propagation path.

24. The base station of claim 21, wherein the parameter path information is obtained by at least one estimation technique of the group consisting of a maximum likelihood estimation algorithm, periodogram, correlatorgram, spectral-based methods, Bartlett beamformers, Capon beamformers, subspace –based techniques, MUSIC (MUltiple SIgnal Classification), ESPRIT (Estimation of Signal Parameters via Rotational Invariance Techniques), approximation of the maximum-likelihood method based on iterative schemes, SAGE (Space-Alternating Generalized Expectation-maximization), RiMAX (Richter's Maximum Likelihood method), maximum-a-posteriori based methods, Evidence Framework, Bayesian techniques, tracking algorithms, the Kalman filtering techniques, enhanced Kalman filtering techniques, particle filtering techniques, and least-square-error methods.

25. The base station of claim 21, wherein the transmitter is comprised of multiple antennas in a multiple-input and multiple-output (MIMO) wireless communication system.

26. The base station of claim 21, wherein the transmitter comprises a single antenna in a single-input and single-output (SISO) wireless communication system.

27. The base station of claim 21, the computer-executable instructions stored that are executable by the computing device further comprising:

receiving a system response estimation of the first signal to obtain parameter information of the communication system; and

predistorting a second signal according to the system estimation.

ABSTRACT

Systems and methods for wireless communication in a system including a transmitter, a receiver, and a plurality of propagation paths formed between the transmitter and the receiver which are capable of carrying a signal transmitted by the transmitter to the receiver. The method includes transmitting a first signal from the transmitter to the receiver via a propagation path of the plurality of propagation paths, receiving the first signal at the receiver, performing a channel estimation of the first signal to obtain path parameter information of the propagation path, sending the channel estimation from the receiver to the transmitter via the propagation path, predistorting a second signal at the transmitter according to the channel estimation, transmitting the predistorted signal from the transmitter to the receiver via the propagation path, and receiving the predistorted signal at the receiver.

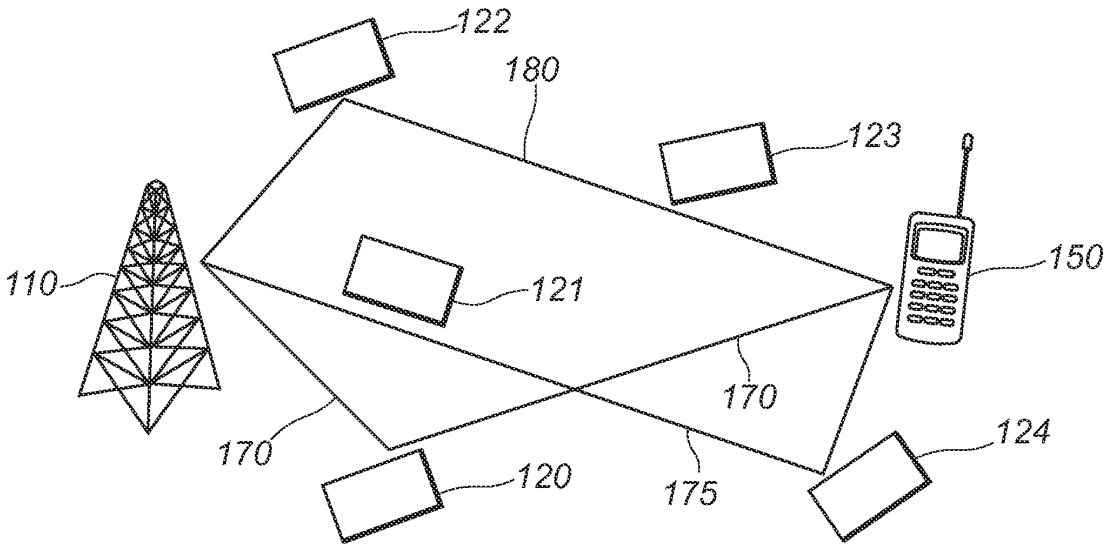
122
180
123
110
121
150
170
170
124
120
175

FIG. 1

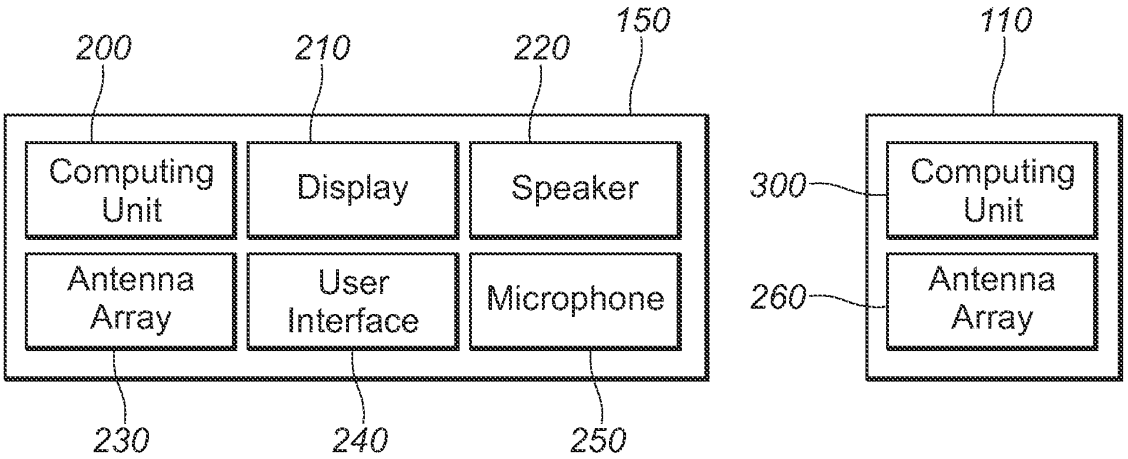
200
210
220
150
110
Computing Unit
Display
Speaker
300
Computing Unit
Antenna Array
User Interface
Microphone
260
Antenna Array
230
240
250

FIG. 2

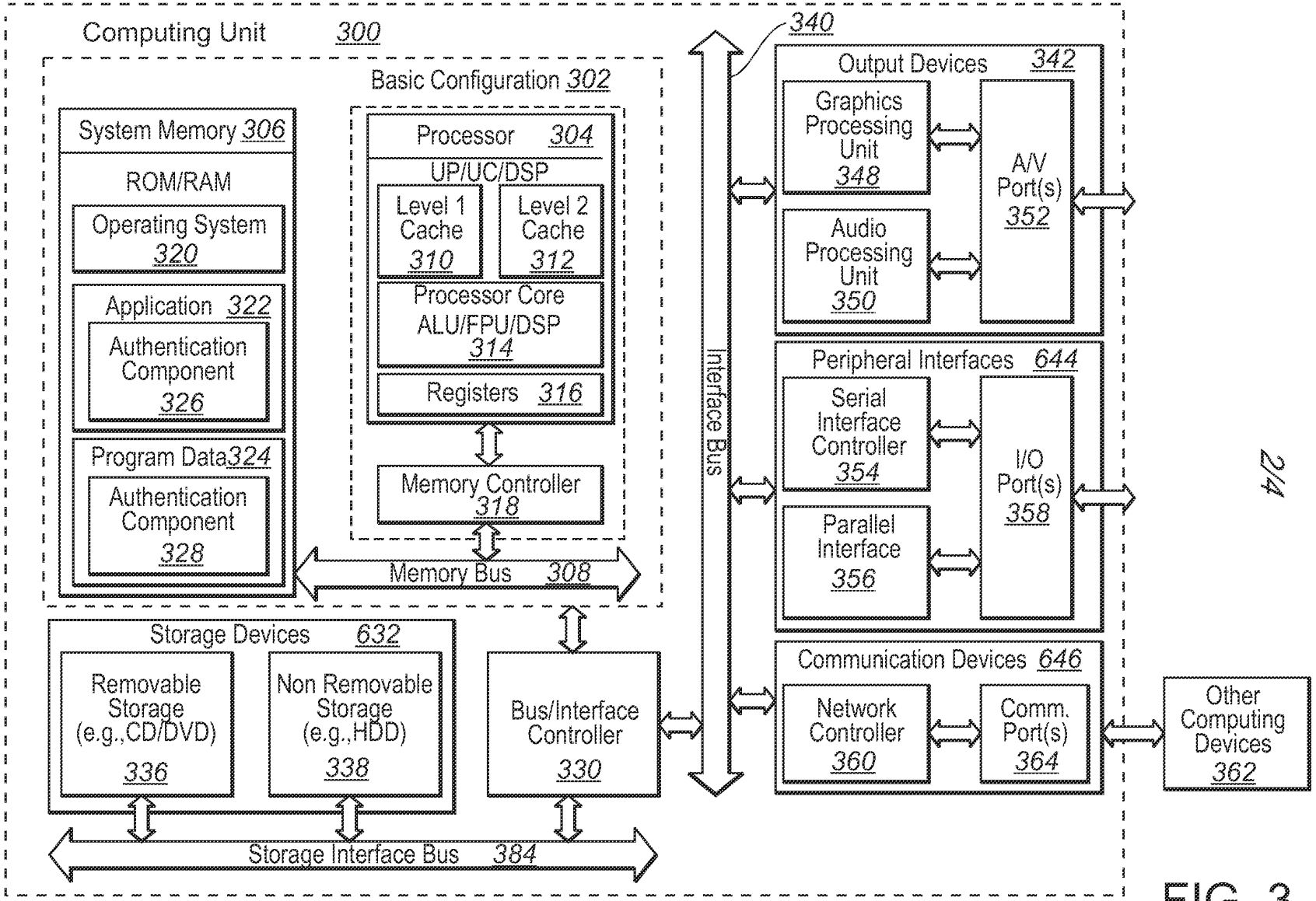
Computing Unit 300
Basic Configuration 302
System Memory 306
ROM/RAM
Operating System 320
Application 322
Authentication Component 326
Program Data 324
Authentication Component 328
Processor 304
UP/UC/DSP
Level 1 Cache 310
Level 2 Cache 312
Processor Core ALU/FPU/DSP 314
Registers 316
Memory Controller 318
Memory Bus 308
Storage Devices 632
Removable Storage (e.g.,CD/DVD) 336
Non Removable Storage (e.g.,HDD) 338
Bus/Interface Controller 330
Storage Interface Bus 384
340
Interface Bus
Output Devices 342
Graphics Processing Unit 348
Audio Processing Unit 350
A/V Port(s) 352
Peripheral Interfaces 644
Serial Interface Controller 354
Parallel Interface 356
I/O Port(s) 358
Communication Devices 646
Network Controller 360
Comm. Port(s) 364
Other Computing Devices 362

FIG. 3

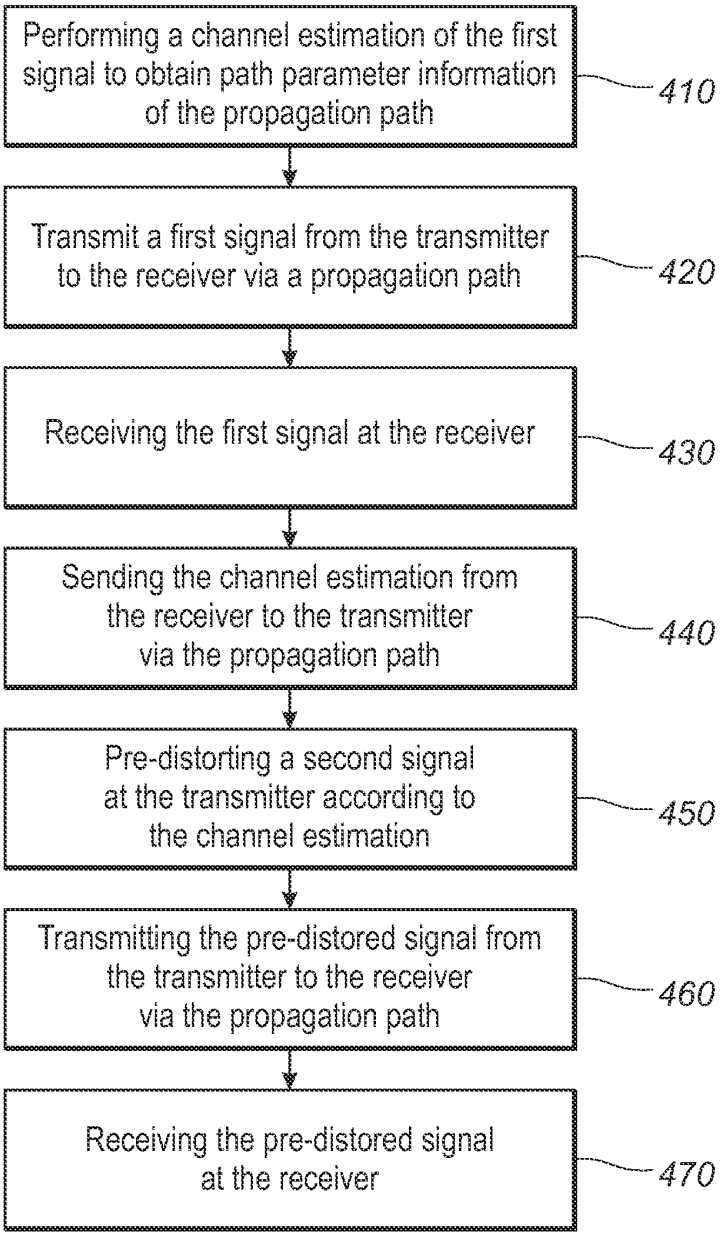
Performing a channel estimation of the first signal to obtain path parameter information of the propagation path
410
Transmit a first signal from the transmitter to the receiver via a propagation path
420
Receiving the first signal at the receiver
430
Sending the channel estimation from the receiver to the transmitter via the propagation path
440
Pre-distorting a second signal at the transmitter according to the channel estimation
450
Transmitting the pre-distored signal from the transmitter to the receiver via the propagation path
460
Receiving the pre-distored signal at the receiver
470

FIG. 4

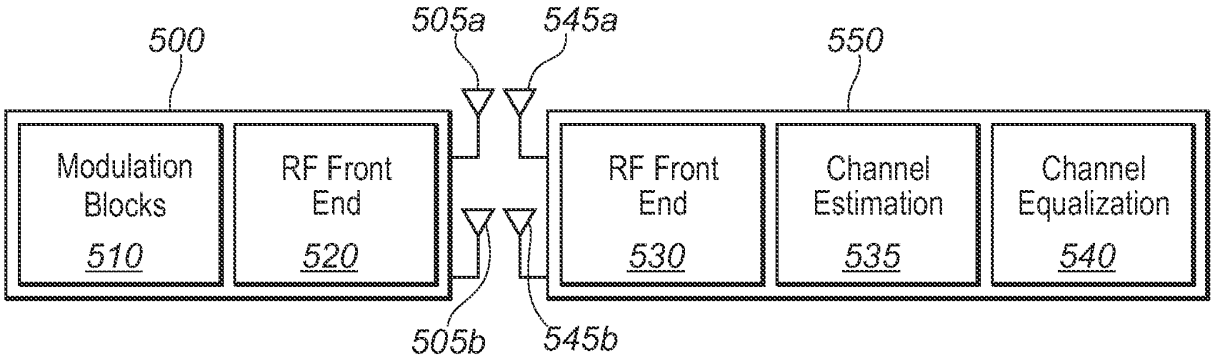

FIG. 5A

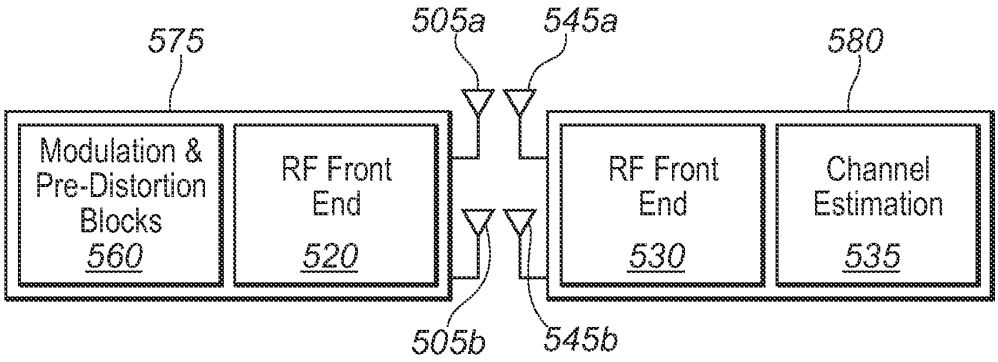

FIG. 5B

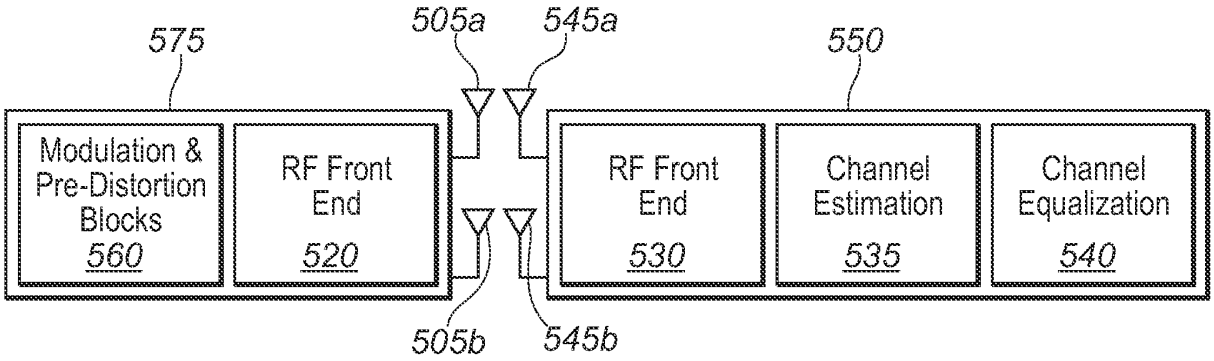

FIG. 5C

PATENT APPLICATION

IN THE UNITED STATES PATENT AND TRADEMARK OFFICE

In re application of	Xuefeng YIN	
Application No.:	Unassigned	Art Unit Unassigned
Filed:	July 28, 2011	
Conf. No.:	Unassigned	
For:	USER-FOCUSING TECHNIQUE FOR WIRELESS COMMUNICATION SYSTEMS	
Examiner:	Unassigned	
Customer No.:	97149	
Attorney Docket No.:	I1013.10038US01	

PRELIMINARY AMENDMENT UNDER 37 C.F.R. §1.115

Mail Stop Amendment
Commissioner for Patents
P.O. Box 1450
Alexandria, VA 22313-1450

Dear Sir:

Applicants respectfully request entry of the following preliminary amendment.

Amendments to the Claims are reflected in the listing of claims which begins on page 2 of this paper.

Remarks begin on page 9 of this paper.

AMENDMENTS TO THE CLAIMS

This listing of claims replaces all prior versions and listings of claims in the application:

1. **(Currently Amended)** A method for wireless communication in a system including a transmitter, a receiver, and a plurality of propagation paths formed between the transmitter and the receiver which are capable of carrying a signal transmitted by the transmitter to the receiver, the method comprising:

transmitting a first signal from the transmitter to the receiver via a propagation path of the plurality of propagation paths;

receiving the first signal at the receiver;

performing a channel estimation [[of]] <u>based on</u> the first signal to obtain path parameter information of the propagation path;

sending the channel estimation from the receiver to the transmitter via the propagation path;

predistorting a second signal at the transmitter <u>in a time domain, a frequency domain, and a spatial domain,</u> according to the channel estimation <u>based on the first signal</u>;

transmitting the predistorted <u>second</u> signal from the transmitter to the receiver via the propagation path; and

receiving the predistorted <u>second</u> signal at the receiver.

2. **(Currently Amended)** The method of claim 1, wherein the path parameter information of the propagation path includes at least one of an estimation of a delay, an estimation of a Doppler frequency, an estimation of a direction of arrival, an estimation of a direction of departure, and <u>an estimation of</u> a complex amplitude of the propagation path.

3. **(Original)** The method of claim 2, wherein the path parameter information of the propagation path further includes an estimation of a polarization status of the propagation path.

4. **(Currently Amended)** The method of claim 1, wherein the <u>path</u> parameter ~~path~~ information is obtained by at least one estimation technique of the group consisting of a maximum likelihood estimation algorithm, periodogram, correlatorgram, spectral-based

methods, Bartlett beamformers, Capon beamformers, subspace –based techniques, MUSIC (MUltiple SIgnal Classification), ESPRIT (Estimation of Signal Parameters via Rotational Invariance Techniques), approximation of the maximum-likelihood method based on iterative schemes, SAGE (Space-Alternating Generalized Expectation-maximization), RiMAX (Richter's Maximum Likelihood method), maximum-a-posteriori based methods, Evidence Framework, Bayesian techniques, tracking algorithms, ~~the~~ Kalman filtering techniques, enhanced Kalman filtering techniques, particle filtering techniques, and least-square-error methods.

5. **(Cancelled)**

6. **(Cancelled)**

7. **(Currently Amended)** The method of claim 1, the method further comprising:

performing a system response estimation of the first signal to obtain parameter information of the ~~communication~~ system;

sending the system response estimation from the receiver to the transmitter via the propagation path; and

further predistorting [[a]] the predistorted second signal at the transmitter according to the system response estimation.

8. **(Currently Amended)** The method of claim 1, further comprising: equalizing the predistorted second signal at the receiver.

9. **(Currently Amended)** The method of claim 8, wherein equalizing the predistorted second signal is performed using ~~at least one of the group consisting of~~ a joint processing technique in a coordinated multiple-point (CoMP) system.

10. **(Cancelled)**

11. **(Cancelled)**

12. **(Currently Amended)** A system for wireless communication comprising:

a receiver;

a transmitter; and

a plurality of propagation paths formed between the transmitter and the receiver which are capable of carrying a signal transmitted by the transmitter to the receiver,

wherein the receiver is configured to receive a first signal from the transmitter, perform a channel estimation [[of]] <u>based on</u> the first signal to obtain path parameter information of the propagation path, and send the channel estimation to the transmitter via the propagation path, and

wherein the transmitter is configured to predistort a second signal <u>in a time domain, a frequency domain, and a spatial domain</u> according to the channel estimation <u>that is based on the first signal and</u> received from the receiver and transmit the predistorted <u>second</u> signal to the receiver via the propagation path.

13. **(Currently Amended)** The system of claim 12, wherein the path parameter information of the propagation path includes at least one of an estimation of a delay, an estimation of a Doppler frequency, an estimation of a direction of arrival, an estimation of a direction of departure, and <u>an estimation of</u> a complex amplitude of the propagation path.

14. **(Currently Amended)** The system of claim 12, wherein the path parameter information of the propagation path further includes an estimation <u>of</u> a polarization status of the propagation path.

15. **(Currently Amended)** The system of claim 12, wherein the <u>path</u> parameter ~~path~~ information is obtained by at least one estimation technique of the group consisting of a maximum likelihood estimation algorithm, periodogram, correlatorgram, spectral-based methods, Bartlett beamformers, Capon beamformers, subspace –based techniques, MUSIC (MUltiple SIgnal Classification), ESPRIT (Estimation of Signal Parameters via Rotational Invariance Techniques), approximation of the maximum-likelihood method based on iterative schemes, SAGE (Space-Alternating Generalized Expectation-maximization), RiMAX (Richter's Maximum Likelihood method), maximum-a-posteriori based methods, Evidence Framework,

Bayesian techniques, tracking algorithms, ~~the~~ Kalman filtering techniques, enhanced Kalman filtering techniques, particle filtering techniques, and least-square-error methods.

16. **(Currently Amended)** The system of claim 12, wherein the transmitter and the receiver ~~are~~ each ~~comprised of~~ comprise multiple antennas in a multiple-input and multiple-output (MIMO) wireless communication system or a single antenna in a single-input and single-output (SISO) wireless communication system.

17. **(Cancelled)**

18. **(Currently Amended)** The system ~~according to~~ of claim 12, wherein the receiver is further configured to perform a system response estimation of the first signal to obtain parameter information of the ~~communication~~ system and send the system response estimation from the receiver to the transmitter via the propagation path, and

wherein the transmitter is further configured to further predistort the predistorted second signal according to the system response estimation.

19. **(Currently Amended)** The system ~~according to~~ of claim 12, wherein the receiver is further configured to equalize the predistorted second signal.

20. **(Cancelled)**

21. **(Currently Amended)** A base station for performing wireless communication with a receiver in a wireless device via a plurality of propagation paths, the base station comprising:

at least one transmitter;

a computing device; and

a computer-readable storage medium having computer-executable instructions stored thereon that are executable by the computing device to perform operations comprising:

transmitting a first signal from the transmitter to the receiver via a propagation path of the plurality of propagation paths;

receiving a channel estimation [[of]] based on the first signal including path parameter information of the propagation path;

predistorting a second signal in a time domain, a frequency domain, and a spatial domain according to the channel estimation based on the first signal; and

transmitting the predistorted second signal from the transmitter to the receiver via the propagation path.

22. **(Currently Amended)** The base station of claim 21, wherein the path parameter information of the propagation path includes at least one of an estimation of a delay, an estimation of a Doppler frequency, an estimation of a direction of arrival, an estimation of a direction of departure, ~~and~~ an estimation of a complex amplitude of the propagation path, and an estimation of a polarization status of the propagation path.

23. **(Cancelled)**

24. **(Cancelled)**

25. **(Currently amended)** The base station of claim 21, wherein the transmitter ~~is comprised of~~ comprises multiple antennas in a multiple-input and multiple-output (MIMO) wireless communication system or a single antenna in a single-input and single-output (SISO) wireless communication system.

26. **(Cancelled)**

27. **(Currently Amended)** The base station of claim 21, the computer-executable instructions stored that are executable by the computing device further comprising:

receiving a system response estimation of the first signal ~~to obtain~~ that contains parameter information of the ~~communication system~~ base station, the wireless device, and of the propagation path; and

further predistorting [[a]] the predistorted second signal according to the system response estimation.

28. **(New)** A wireless device for performing wireless communication with a base station with a transmitter via a plurality of propagation paths, the wireless device comprising:

at least one receiver;

a computing device; and

a computer-readable storage medium having computer-executable instructions stored thereon that are executable by the computing device to perform operations comprising:

receiving a first signal at the receiver via one of the plurality of propagation paths;

performing a channel estimation based on the first signal to obtain path parameter information of the plurality of propagation paths;

sending the channel estimation to the transmitter;

receiving a second signal via the one of the plurality of propagation paths, the second signal predistorted in a time domain, a frequency domain, and a spatial domain according to the channel estimation based on the first signal.

29. **(New)** The wireless device of claim 28, wherein the path parameter information of the propagation path includes at least one of an estimation of a delay, an estimation of a Doppler frequency, an estimation of a direction of arrival, an estimation of a direction of departure, and an estimation of a complex amplitude of the propagation path.

30. **(New)** The wireless device of claim 29, wherein the path parameter information of the propagation path further includes an estimation of a polarization status of the propagation path.

31. **(New)** The wireless device of claim 28, wherein the path parameter information is obtained by at least one estimation technique of the group consisting of a maximum likelihood estimation algorithm, periodogram, correlatorgram, spectral-based methods, Bartlett beamformers, Capon beamformers, subspace –based techniques, MUSIC (MUltiple SIgnal Classification), ESPRIT (Estimation of Signal Parameters via Rotational Invariance Techniques), approximation of the maximum-likelihood method based on iterative schemes, SAGE (Space-Alternating Generalized Expectation-maximization), RiMAX (Richter's Maximum Likelihood

method), maximum-a-posteriori based methods, Evidence Framework, Bayesian techniques, tracking algorithms, Kalman filtering techniques, enhanced Kalman filtering techniques, particle filtering techniques, and least-square-error methods.

32. **(New)** The wireless device of claim 28, wherein the receiver comprises multiple antennas in a multiple-input and multiple-output (MIMO) wireless communication system or a single antenna in a single-input and single-output (SISO) wireless communication system.

33. **(New)** The wireless device of claim 28, wherein the computer-executable instructions stored that are executable by the computing device further comprise:

receiving a third signal along another of the plurality of propagation paths, the third signal being phase aligned with the second signal when received by the receiver such that no equalization of the second and third signals is performed by the wireless device.

34. **(New)** The wireless device of claim 28, wherein the computer-executable instructions stored that are executable by the computing device further comprise:

generating a system response estimation of the first signal that contains parameter information of the base station, the wireless device, and of the propagation path; and

receiving the second signal predistorted based on the system response estimation.

REMARKS

The amendments herein have been made not in response to any rejection or objection posed by the Examiner. The foregoing amendment cancels claims 5, 6, 10, 11, 17, 20, 23, 24, and 26; amends claims 1, 2, 4, 7-9, 12-16, 18, 19, 21, 22, 25, and 27; and adds new claims 28-34. Claims 1-4, 7-9, 12-16, 18, 19, 21, 22, 25, and 27-34 are now pending in view of the amendments. Applicant respectfully requests entry of the amendments herein prior to examination of the application and favorable consideration of the pending claims.

In the event that Examiner finds remaining impediment to a prompt allowance of this application that may be clarified through a telephone interview or overcome by an Examiner's Amendment, Examiner is requested to contact the undersigned attorney.

Dated this 16th day of July, 2012.

Respectfully submitted,

/R. Burns Israelsen/ Reg. #42,685

R. BURNS ISRAELSEN
Registration No. 42,685
Attorney for Applicant
Customer No. 97149
Telephone No. (435) 252-1360

PTO/SB/80 (11-08)
Approved for use through 11/30/2011. OMB 0651-0035
U.S. Patent and Trademark Office; U.S. DEPARTMENT OF COMMERCE
Under the Paperwork Reduction Act of 1995, no persons are required to respond to a collection of information unless it displays a valid OMB control number.

POWER OF ATTORNEY TO PROSECUTE APPLICATIONS BEFORE THE USPTO

I hereby revoke all previous powers of attorney given in the application identified in the attached statement under 37 CFR 3.73(b).

I hereby appoint:

☑ Practitioners associated with the Customer Number: 97149

OR

☐ Practitioner(s) named below (if more than ten patent practitioners are to be named, then a customer number must be used):

Name	Registration Number	Name	Registration Number

as attorney(s) or agent(s) to represent the undersigned before the United States Patent and Trademark Office (USPTO) in connection with any and all patent applications assigned only to the undersigned according to the USPTO assignment records or assignment documents attached to this form in accordance with 37 CFR 3.73(b).

Please change the correspondence address for the application identified in the attached statement under 37 CFR 3.73(b) to:

☑ The address associated with Customer Number: 97149

OR

☐ Firm or Individual Name			
Address			
City		State	Zip
Country			
Telephone		Email	

Assignee Name and Address:

Empire Technology Development LLC
2711 Centerville Road, Suite 400
Wilmington, Delaware 19808

A copy of this form, together with a statement under 37 CFR 3.73(b) (Form PTO/SB/96 or equivalent) is required to be filed in each application in which this form is used. The statement under 37 CFR 3.73(b) may be completed by one of the practitioners appointed in this form if the appointed practitioner is authorized to act on behalf of the assignee, and must identify the application in which this Power of Attorney is to be filed.

SIGNATURE of Assignee of Record

The individual whose signature and title is supplied below is authorized to act on behalf of the assignee

Signature	[signature]	Date	2/9/11
Name	Stacey Ravetta	Telephone	425 691 4005
Title	Authorized Representive		

This collection of information is required by 37 CFR 1.31, 1.32 and 1.33. The information is required to obtain or retain a benefit by the public which is to file (and by the USPTO to process) an application. Confidentiality is governed by 35 U.S.C. 122 and 37 CFR 1.11 and 1.14. This collection is estimated to take 3 minutes to complete, including gathering, preparing, and submitting the completed application form to the USPTO. Time will vary depending upon the individual case. Any comments on the amount of time you require to complete this form and/or suggestions for reducing this burden, should be sent to the Chief Information Officer, U.S. Patent and Trademark Office, U.S. Department of Commerce, P.O. Box 1450, Alexandria, VA 22313-1450. DO NOT SEND FEES OR COMPLETED FORMS TO THIS ADDRESS. **SEND TO: Commissioner for Patents, P.O. Box 1450, Alexandria, VA 22313-1450.**

If you need assistance in completing the form, call 1-800-PTO-9199 and select option 2.

Privacy Act Statement

The Privacy Act of 1974 (P.L. 93-579) requires that you be given certain information in connection with your submission of the attached form related to a patent application or patent. Accordingly, pursuant to the requirements of the Act, please be advised that: (1) the general authority for the collection of this information is 35 U.S.C. 2(b)(2); (2) furnishing of the information solicited is voluntary; and (3) the principal purpose for which the information is used by the U.S. Patent and Trademark Office is to process and/or examine your submission related to a patent application or patent. If you do not furnish the requested information, the U.S. Patent and Trademark Office may not be able to process and/or examine your submission, which may result in termination of proceedings or abandonment of the application or expiration of the patent.

The information provided by you in this form will be subject to the following routine uses:

1. The information on this form will be treated confidentially to the extent allowed under the Freedom of Information Act (5 U.S.C. 552) and the Privacy Act (5 U.S.C 552a). Records from this system of records may be disclosed to the Department of Justice to determine whether disclosure of these records is required by the Freedom of Information Act.
2. A record from this system of records may be disclosed, as a routine use, in the course of presenting evidence to a court, magistrate, or administrative tribunal, including disclosures to opposing counsel in the course of settlement negotiations.
3. A record in this system of records may be disclosed, as a routine use, to a Member of Congress submitting a request involving an individual, to whom the record pertains, when the individual has requested assistance from the Member with respect to the subject matter of the record.
4. A record in this system of records may be disclosed, as a routine use, to a contractor of the Agency having need for the information in order to perform a contract. Recipients of information shall be required to comply with the requirements of the Privacy Act of 1974, as amended, pursuant to 5 U.S.C. 552a(m).
5. A record related to an International Application filed under the Patent Cooperation Treaty in this system of records may be disclosed, as a routine use, to the International Bureau of the World Intellectual Property Organization, pursuant to the Patent Cooperation Treaty.
6. A record in this system of records may be disclosed, as a routine use, to another federal agency for purposes of National Security review (35 U.S.C. 181) and for review pursuant to the Atomic Energy Act (42 U.S.C. 218(c)).
7. A record from this system of records may be disclosed, as a routine use, to the Administrator, General Services, or his/her designee, during an inspection of records conducted by GSA as part of that agency's responsibility to recommend improvements in records management practices and programs, under authority of 44 U.S.C. 2904 and 2906. Such disclosure shall be made in accordance with the GSA regulations governing inspection of records for this purpose, and any other relevant (*i.e.*, GSA or Commerce) directive. Such disclosure shall not be used to make determinations about individuals.
8. A record from this system of records may be disclosed, as a routine use, to the public after either publication of the application pursuant to 35 U.S.C. 122(b) or issuance of a patent pursuant to 35 U.S.C. 151. Further, a record may be disclosed, subject to the limitations of 37 CFR 1.14, as a routine use, to the public if the record was filed in an application which became abandoned or in which the proceedings were terminated and which application is referenced by either a published application, an application open to public inspection or an issued patent.
9. A record from this system of records may be disclosed, as a routine use, to a Federal, State, or local law enforcement agency, if the USPTO becomes aware of a violation or potential violation of law or regulation.

PATENT COOPERATION TREATY

From the INTERNATIONAL SEARCHING AUTHORITY

To: **100020**

20st Floor,East Tower,World Financial Centre,1 Dongsanhuan Zhonglu,Chaoyang District,100020,Beijing CHINA

KING & WOOD MALLESONS LAWYERS
Maohua Wang

PCT

NOTIFICATION OF TRANSMITTAL OF THE INTERNATIONAL SEARCH REPORT AND THE WRITTEN OPINION OF THE INTERNATIONAL SEARCHING AUTHORITY, OR THE DECLARATION

(PCT Rule 44.1)

Date of mailing *(day/month/year)*	**03 May 2012 (03.05.2012)**
Applicant's or agent's file reference **EIE110161PCT**	**FOR FURTHER ACTION** See paragraphs 1 and 4 below
International application No. **PCT/CN2011/077718**	International filing date *(day/month/year)* **28 Jul. 2011(28.07.2011)**
Applicant **EMPIRE TECHNOLOGY DEVELOPMENT LLC et al.**	

1. ☒ The applicant is hereby notified that the international search report and the written opinion of the International Searching Authority have been established and are transmitted herewith.

Filing of amendments and statement under Article 19:
The applicant is entitled, if he so wishes, to amend the claims of the international application (see Rule 46):
When? The time limit for filing such amendments is normally two months from the date of transmittal of the international search report.
Where? Directly to the International Bureau of WIPO, 34 chemin des Colombettes 1211 Geneva 20,Switzerland, Facsimile No.: +41 22 338 82 70
For more detailed instructions, see the notes on the accompanying sheet.

2. ☐ The applicant is hereby notified that no international search report will be established and that the declaration under Article 17(2)(a) to that effect and the written opinion of the International Searching Authority are transmitted herewith.

3. ☐ **With regard to any protest** against payment of (an) additional fee(s) under Rule 40.2, the applicant is notified that:
☐ the protest together with the decision thereon has been transmitted to the International Bureau together with the applicant's request to forward the texts of both the protest and the decision thereon to the designated Offices.
☐ no decision has been made yet on the protest; the applicant will be notified as soon as a decision is made.

4. **Reminders**
Shortly after the expiration of **18 months** from the priority date, the international application will be published by the International Bureau. If the applicant wishes to avoid or postpone publication, a notice of withdrawal of the international application, or of the priority claim, must reach the International Bureau as provided in Rules 90*bis*.1 and 90*bis*.3, respectively, before the completion of the technical preparations for international publication.

The applicant may submit comments on an informal basis on the written opinion of the International Searching Authority to the International Bureau. The International Bureau will send a copy of such comments to all designated Offices unless an international preliminary examination report has been or is to be established. These comments would also be made available to the public but not before the expiration of 30 months from the priority date.

Within **19 months** from the priority date, but only in respect of some designated Offices, a demand for international preliminary examination must be filed if the applicant wishes to postpone the entry into the national phase **until 30 months** from the priority date (in some Offices even later);otherwise, the applicant must, **within 20 months** from the priority date, perform the prescribed acts for entry into the national phase before those designated Offices.

In respect of other designated Offices, the time limit of **30 months** (or later) will apply even if no demand is filed within 19 months.

See the Annex to Form PCT/IB/301 and, for details about the applicable time limits, Office by Office, see the PCT *Applicant's Guide*, National Chapters.

Name and mailing address of the ISA/CN The State Intellectual Property Office, the P.R.China 6 Xitucheng Rd., Jimen Bridge, Haidian District, Beijing, China 100088 Facsimile No. (86-10)62019451	Authorized officer **CHEN Shaobei** Telephone No. (86-10)**62411315**

Form PCT/ISA/220 (July 2009) *(See notes on accompanying sheet)*

NOTES TO FORM PCT/ISA/220

These Notes are intended to give the basic instructions concerning the filing of amendments under Article 19. The Notes are based on the requirements of the Patent Cooperation Treaty, the Regulations and the Administrative Instructions under that Treaty. In case of discrepancy between these Notes and those requirements, the latter are applicable. For more detailed information, see also the *PCT Applicant's Guide*.

In these Notes, "Article," "Rule" and "Section" refer to the provisions of the PCT, the PCT Regulations and the PCT Administrative Instructions, respectively.

INSTRUCTIONS CONCERNING AMENDMENTS UNDER ARTICLE 19

The applicant has, after having received the international search report and the written opinion of the International Searching Authority, one opportunity to amend the claims of the international application. It should however be emphasized that, since all parts of the international application (claims, description and drawings) may be amended during the international preliminary examination procedure, there is usually no need to file amendments of the claims under Article 19except where, e.g. the applicant wants the latter to be published for the purposes of provisional protection or has another reason for amending the claims before international publication. Furthermore, it should be emphasized that provisional protection is available in some States only (see *PCT Applicant's Guide*).

The attention of the applicant is drawn to the fact that amendments to the claims under Article 19 are not allowed where the International Searching Authority has declared, under Article 17(2), that no international search report would be established (see *PCT Applicant's Guide*, paragraph 296).

What parts of the international application may be amended ?

Under Article 19, only the claims may be amended.

During the international phase, the claims may also be amended (or further amended) under Article 34 before the International Preliminary Examining Authority. The description and drawings may only be amended under Article 34 before the International Preliminary Examining Authority.

Upon entry into the national phase, all parts of the international application may be amended under Article 28 or, where applicable, Article 41.

When ? Within 2 months from the date of transmittal of the international search report or 16 months from the priority date, whichever time limit expires later. It should be noted, however, that the amendments will be considered as having been received on time if they are received by the International Bureau after the expiration of the applicable time limit but before the completion of the technical preparations for international publication (Rule 46.1).

Where not to file the amendments ?

The amendments may only be filed with the International Bureau and not with the receiving Office or the International Searching Authority (Rule 46.2).

Where a demand for international preliminary examination has been/is filed, see below.

How ? Either by cancelling one or more entire claims, by adding one or more new claims or by amending the text of one or more of the claims as filed.

A replacement sheet or sheets containing a complete set of claims in replacement of all the claims previously filed must be submitted.

Where a claim is cancelled, no renumbering of the other claims is required. In all cases where claims are renumbered, they must be renumbered consecutively in Arabic numerals (Section 205(a)).

The amendments must be made in the language in which the international application is to be published.

What documents must/may accompany the amendments ?

Letter (Section 205(b)):

The amendments must be submitted with a letter.

The letter will not be published with the international application and the amended claims. It should not be confused with the "Statement under Article 19(1)" (see below, under "Statement under Article 19(1)").

The letter must be in English or French, at the choice of the applicant. However, if the language of the international application is English, the letter must be in English; if the language of the international application is French, the letter must be in French.

NOTES TO FORM PCT/ISA/220 (continued)

The letter must indicate the differences between the claims as filed and the claims as amended. It must, in particular, indicate, in connection with each claim appearing in the international application (it being understood that identical indications concerning several claims may be grouped), whether

(i) the claim is unchanged;
(ii) the claim is cancelled;
(iii) the claim is new;
(iv) the claim replaces one or more claims as filed;
(v) the claim is the result of the division of a claim as filed.

The following examples illustrate the manner in which amendments must be explained in the accompanying letter:

1. [Where originally there were 48 claims and after amendment of some claims there are 51]:
   "Claims 1 to 29, 31, 32, 34, 35, 37 to 48 replaced by amended claims bearing the same numbers;
   claims 30, 33 and 36 unchanged; new claims 49 to 51 added."
2. [Where originally there were 15 claims and after amendment of all claims there are 11]:
   "Claims 1 to 15 replaced by amended claims 1 to 11."
3. [Where originally there were 14 claims and the amendments consist in cancelling some claims and in adding new claims]:
   "Claims 1 to 6 and 14 unchanged; claims 7 to 13 cancelled; new claims 15, 16 and 17 added." or
   "Claims 7 to 13 cancelled; new claims 15, 16 and 17 added; all other claims unchanged."
4. [Where various kinds of amendments are made]:
   "Claims 1-10 unchanged; claims 11 to 13, 18 and 19 cancelled; claims 14, 15 and 16 replaced by amended claim 14; claim 17 subdivided into amended claims 15, 16 and 17; new claims 20 and 21 added."

"Statement under Article 19(1)" (Rule 46.4)

The amendments may be accompanied by a statement explaining the amendments and indicating any impact that such amendments might have on the description and the drawings (which cannot be amended under Article 19(1)).

The statement will be published with the international application and the amended claims.

It must be in the language in which the international application is to be published.

It must be brief, not exceeding 500 words if in English or if translated into English.

It should not be confused with and does not replace the letter indicating the differences between the claims as filed and as amended. It must be filed on a separate sheet and must be identified as such by a heading, preferably by using the words "Statement under Article 19(1)."

It may not contain any disparaging comments on the international search report or the relevance of citations contained in that report. Reference to citations, relevant to a given claim, contained in the international search report may be made only in connection with an amendment of that claim.

Consequence if a demand for international preliminary examination has already been filed

If, at the time of filing any amendments and any accompanying statement, under Article 19, a demand for international preliminary examination has already been submitted, the applicant must preferably, at the time of filing the amendments (and any statement) with the International Bureau, also file with the International Preliminary Examining Authority a copy of such amendments (and of any statement) and, where required, a translation of such amendments for the procedure before that Authority (see Rules 55.3(a) and 62.2, first sentence). For further information, see the Notes to the demand form (PCT/IPEA/401).

If a demand for international preliminary examination is made, the written opinion of the International Searching Authority will, except in certain cases where the International Preliminary Examining Authority did not act as International Searching Authority and where it has notified the International Bureau under Rule 66.1*bis*(b), be considered to be a written opinion of the International Preliminary Examining Authority. If a demand is made, the applicant may submit to the International Preliminary Examining Authority a reply to the written opinion together, where appropriate, with amendments before the expiration of 3 months from the date of mailing of FormPCT/ISA/220 or before the expiration of 22 months from the priority date, whichever expires later (Rule 43*bis*.1(c)).

Consequence with regard to translation of the international application for entry into the national phase

The applicant's attention is drawn to the fact that, upon entry into the national phase, a translation of the claims as amended under Article 19 may have to be furnished to the designated/elected Offices, instead of, or in addition to, the translation of the claims as filed.
For further details on the requirements of each designated/elected Office, see the *PCT Applicant's Guide* , National Chapters.

PATENT COOPERATION TREATY

PCT

INTERNATIONAL SEARCH REPORT

(PCT Article 18 and Rules 43 and 44)

Applicant's or agent's file reference EIE110161PCT	**FOR FURTHER ACTION** see Form PCT/ISA/220 as well as, where applicable, item 5 below.	
International application No. PCT/CN2011/077718	International filing date *(day/month/year)* 28 Jul. 2011(28.07.2011)	(Earliest)Priority date *(day/month/year)*
Applicant EMPIRE TECHNOLOGY DEVELOPMENT LLC et al.		

This international search report has been prepared by this International Searching Authority and is transmitted to the applicant according to Article 18. A copy is being transmitted to the International Bureau.

This international search report consists of a total of 4 sheets.

☐ It is also accompanied by a copy of each prior art document cited in this report.

1. **Basis of the report**
   a. With regard to the **language**, the international search was carried out on the basis of:
      ☒ the international application in the language in which it was filed
      ☐ a translation of the international application into _____, which is the language of a translation furnished for the purposes of international search (Rules 12.3(a) and 23.1(b))
   b. ☐ This international search report has been established taking into account the **rectification of an obvious mistake** authorized by or notified to this Authority under Rule 91 (Rule 43.6bis(a)).
   c. ☐ With regard to any **nucleotide and /or amino acid sequence** disclosed in the international application, see Box No. I.
2. ☐ **Certain claims were found unsearchable** (see Box No. II)
3. ☐ **Unity of invention is lacking** (see Box No. III)
4. With regard to the **title**,
   ☒ the text is approved as submitted by the applicant.
   ☐ the text has been established by this Authority to read as follows:
5. With regard to the **abstract**,
   ☐ the text is approved as submitted by the applicant.
   ☒ the text has been established, according to Rule 38.2(b), by this Authority as it appears in Box IV. The applicant may, within one month from the date of mailing of this international search report, submit comments to this Authority.
6. With regard to the **drawings**,
   a. The figure of the **drawings** to be published with the abstract is Figure No. 4
      ☒ as suggested by the applicant
      ☐ as selected by this Authority, because the applicant failed to suggest a figure
      ☐ as selected by this Authority, because this figure better characterizes the invention
   b. ☐ none of the figures is to be published with the abstract

Form PCT/ISA/210(first sheet)(July 2009)

中华人民共和国国家知识产权局 专利审查业务章

INTERNATIONAL SEARCH REPORT

International application No.
PCT/CN2011/077718

Box No. IV Text of the abstract (Continuation of item 5 of the first sheet)

The present invention discloses a system and method for wireless communication. The system includes a transmitter, a receiver, and a plurality of propagation paths formed between the transmitter and the receiver which are capable of carrying a signal transmitted by the transmitter to the receiver. The method includes transmitting a first signal from the transmitter to the receiver via a propagation path of the plurality of propagation paths, receiving the first signal at the receiver, performing a channel estimation of the first signal to obtain path parameter information of the propagation path, sending the channel estimation from the receiver to the transmitter via the propagation path, predistorting a second signal at the transmitter according to the channel estimation, transmitting the predistorted signal from the transmitter to the receiver via the propagation path, and receiving the predistorted signal at the receiver.

INTERNATIONAL SEARCH REPORT

International application No.
PCT/CN2011/077718

A. CLASSIFICATION OF SUBJECT MATTER

H04L1/12(2006.01)i

According to International Patent Classification (IPC) or to both national classification and IPC

B. FIELDS SEARCHED

Minimum documentation searched (classification system followed by classification symbols)

IPC:H04L1/-;H04B7/-

Documentation searched other than minimum documentation to the extent that such documents are included in the fields searched

Electronic data base consulted during the international search (name of data base and, where practicable, search terms used)

CNABS;CNTXT;CNKI;VEN: pre, distort+, equalize+, cod+, process+, feedback, estimat+, detect+, measure+, channel, transmitter, receiver, transceiver

C. DOCUMENTS CONSIDERED TO BE RELEVANT

Category*	Citation of document, with indication, where appropriate, of the relevant passages	Relevant to claim No.
	CN102138309 A (France Telecom) 27 Jul. 2011 (27.07.2011)	
X	Description paragraphs 69 -237	1-10,12-27
Y	The same as above	11
Y	Wei Ning et al., Joint Processing Precoding for Coordinated Multi-Point Transmission in LTE-A, ZTE COMMUNICATIONS, Feb. 2010, Vol.16, No.1, pages37-39	11
A	WO2011012031 A1(ZTE Corporation) 03 Feb. 2011(03.02.2011)	1-27
	The whole document	

☐ Further documents are listed in the continuation of Box C. ☒ See patent family annex.

* Special categories of cited documents:

"A" document defining the general state of the art which is not considered to be of particular relevance

"E" earlier application or patent but published on or after the international filing date

"L" document which may throw doubts on priority claim (S) or which is cited to establish the publication date of another citation or other special reason (as specified)

"O" document referring to an oral disclosure, use, exhibition or other means

"P" document published prior to the international filing date but later than the priority date claimed

"T" later document published after the international filing date or priority date and not in conflict with the application but cited to understand the principle or theory underlying the invention

"X" document of particular relevance; the claimed invention cannot be considered novel or cannot be considered to involve an inventive step when the document is taken alone

"Y" document of particular relevance; the claimed invention cannot be considered to involve an inventive step when the document is combined with one or more other such documents, such combination being obvious to a person skilled in the art

"&"document member of the same patent family

Date of the actual completion of the international search	Date of mailing of the international search report
31 Mar. 2012(31.03.2012)	**03 May 2012 (03.05.2012)**
Name and mailing address of the ISA/CN The State Intellectual Property Office, the P.R.China 6 Xitucheng Rd., Jimen Bridge, Haidian District, Beijing, China 100088 Facsimile No. 86-10-62019451	Authorized officer CHEN, Shaobei Telephone No. (86-10)62411319

Form PCT/ISA /210 (second sheet) (July 2009)

INTERNATIONAL SEARCH REPORT
Information on patent family members

International application No.
PCT/CN2011/077718

Patent Documents referred in the Report	Publication Date	Patent Family	Publication Date
CN102138309 A	27.07.2011	WO2009156703 A3	08.07.20110
		WO2009156703 A2	30.12.2009
		FR2933252 A1	01.01.2010
		EP2316208 A2	04.05.2011
		US2011103457 A1	05.05.2011
WO2011012031 A1	03.02.2011	CN101616376 A	30.12.2009
		CN101616376 B	28.12.2011

Form PCT/ISA /210 (patent family annex) (July 2009)

PATENT COOPERATION TREATY

From the INTERNATIONAL SEARCHING AUTHORITY

To:

100020

20st Floor,East Tower,World Financial Centre,1 Dongsanhuan Zhonglu,Chaoyang District,100020,Beijing CHINA

KING & WOOD MALLESONS LAWYERS

Maohua Wang

PCT

WRITTEN OPINION OF THE INTERNATIONAL SEARCHING AUTHORITY

(PCT Rule 43 *bis*.1)

Date of mailing (*day/month/year*)	03 May 2012 (03.05.2012)
Applicant's or agent's file reference: EIE110161PCT	**FOR FURTHER ACTION** See paragraph 2 below

International application No.	International filing date(*day/month/year*)	Priority date (*day/month/year*)
PCT/CN2011/077718	28 Jul. 2011(28.07.2011)	

International Patent Classification (IPC) or both national classification and IPC

H04L1/12(2006.01)i

Applicant

EMPIRE TECHNOLOGY DEVELOPMENT LLC et al.

1. This opinion contains indications relating to the following items:

- ☒ Box No. I Basis of the opinion
- ☐ Box No.II Priority
- ☐ Box No. III Non-establishment of opinion with regard to novelty, inventive step and industrial applicability
- ☐ Box No. IV Lack of unity of invention
- ☒ Box No. V Reasoned statement under Rule 43*bis*.1(a)(i) with regard to novelty, inventive step or industrial applicability; citations and explanations supporting such statement
- ☐ Box No.VI Certain documents cited
- ☐ Box No. VII Certain defects in the international application
- ☐ Box No.VIII Certain observations on the international application

2. FURTHER ACTION

If a demand for international preliminary examination is made, this opinion will be considered to be a written opinion of the International Preliminary Examining Authority ("IPEA") except that this does not apply where the applicant chooses an Authority other than this one to be the IPEA and the chosen IPEA has notified the International Bureau under Rule 66.1*bis*(b) that written opinions of this International Searching Authority will not be so considered.

If this opinion is, as provided above, considered to be a written opinion of the IPEA, the applicant is invited to submit to the IPEA a written reply together, where appropriate, with amendments, before the expiration of **3** months from the date of mailing of Form PCT/ISA/220 or before the expiration of **22** months from the priority date, whichever expires later.

For further options, see Form PCT/ISA/220.

3. For further details, see notes to Form PCT/ISA/220.

Name and mailing address of the ISA/CN	Date of completion of this opinion	Authorized officer
The State Intellectual Property Office, the P.R.China 6 Xitucheng Rd., Jimen Bridge, Haidian District, Beijing, China 100088 Facsimile No. 86-10-62019451	26 Apr. 2012 (26.04.2012)	CHEN, Shaobei Telephone No. (86-10)62411[illegible]

Form PCT/ISA/237(cover sheet)(July 2009)

WRITTEN OPINION OF THE INTERNATIONAL SEARCHING AUTHORITY

International application No.
PCT/CN2011/077718

Box No. I Basis of the opinion

1. With regard to the **language**, this opinion has been established on the basis of:

   ☒ the international application in the language in which it was filed.
   ☐ a translation of the international application into _____ , which is the language of a translation furnished for the purposes of international search (Rules 12.3(a) and 23.1(b)).

2. ☐ This opinion has been established taking into account the **rectification of an obvious mistake** authorized by or notified to this Authority under Rule 91(Rule 43bis.1(a))

3. With regard to any **nucleotide and/or amino acid sequence** disclosed in the international application ,this opinion has been established on the basis of :

   a. a sequence listing filed or furnished
      ☐ on paper
      ☐ in electronic form

   b. time of filing or furnishing
      ☐ contained in the applicant as filed
      ☐ filed together with the application in electronic form
      ☐ furnished subsequently to this Authority for the purposes of search

4. ☐ In addition, in the case that more than one version or copy of a sequence listing has been filed or furnished, the required statements that the information in the subsequent or additional copies is identical to that in the application as filed or does not go beyond the application as filed, as appropriate, were furnished.

5. Additional comments:

WRITTEN OPINION OF THE INTERNATIONAL SEARCHING AUTHORITY

International application No.
PCT/CN2011/077718

Box No. V **Reasoned statement under Rule 43*bis*.1(a)(i) with regard to novelty, inventive step or industrial applicability; citations and explanations supporting such statement**

1. Statement:

Novelty (N)	Claims	1-27	YES
	Claims	None	NO
Inventive step (IS)	Claims	None	YES
	Claims	1-27	NO
Industrial applicability (IA)	Claims	1-27	YES
	Claims	None	NO

2. Citations and explanations

The following documents is cited as reference:

D1: CN102138309 A (France Telecom) 27 Jul. 2011 (27.07.2011)

D2: Wei Ning et al., Joint Processing Precoding for Coordinated Multi-Point Transmission in LTE-A, ZTE COMMUNICATIONS, Feb. 2010, Vol.16, No.1, pages37-39

1. NOVELITY

1.1 Independent claim 1 requests to protect a method for wireless communication in a system. D1 is regarded as the closest prior art of the technical solution in claim 1. D1 discloses a method for pre-equalized, and discloses in particular the following features (see description paragraphs 69 -237): a destination communicating entity (EC2) evaluates a relative focusing quality of a pre-equalized signal, with respect to a quality at a focal point, where the signal is emitted by an original antenna (A1) and received by a destination antenna (A2); the modification of focusing at the destination of an original communicating entity (EC1) is requested by the destination communicating entity (EC2) for a following instant; the original communicating entity (EC1) modifies the parameters according to the request of the destination communicating entity; the method in the invention also can apply in the MIMO system.

Claim 1 differs from D1 in: transmitting the predistorted signal from the transmitter to the receiver via the propagation path; receiving the predistorting signal at the receiver.

Therefore claim 1 involves novelty and meets the criteria set out in PCT 33(2).

1.2 Claims 2-11 are directly or indirectly dependent on independent claim 1. So claims 2-11 involve novelty and meet the criteria set out in PCT 33(2).

1.3 Independent claim 12 requests to protect a system for wireless communication in a system. D1 is regarded as the closest prior art of the technical solution in claim 12. D1 discloses a system for wireless communication, and discloses in particular the following features (see description paragraphs 69 -237): a destination communicating entity (EC2) evaluates a relative focusing quality of a pre-equalized signal, with respect to a quality at a focal point, where the signal is emitted by an original antenna (A1) and received by a destination antenna (A2); the modification of focusing at the destination of an original communicating entity (EC1) is requested by the destination communicating entity (EC2) for a following instant; the original communicating entity (EC1) modifies the parameters according to the request of the destination communicating entity. the system can be a MIMO system.

Claim 12 differs from D1 in: transmitting the predistorted signal to the receiver by the transmitter via the propagation path.

Therefore claim 12 involves novelty and meets the criteria set out in PCT 33(2).

1.4 Claims 13-20 are directly dependent on independent claim 12. So claims 13-20 involve novelty and meet the criteria set out in PCT 33(2).

1.5 Independent claim 21 requests to protect a base station. D1 is regarded as the closest prior art of the technical solution in claim 21. D1 discloses an original communicating entity (EC1) for wireless communication, and discloses in particular the following features (see description paragraphs 69 -237): a destination communicating entity (EC2) evaluates a relative focusing quality of a pre-equalized signal, with respect to a quality at a focal point, where the signal is emitted by the original antenna (A1) and received by a destination antenna (A2); the modification of focusing at the destination of an original communicating entity (EC1) is requested by the destination communicating entity (EC2) for a following instant; the

Supplemental Box

In case **the space in any of the preceding boxes is not sufficient.**

Continuation of: Box No. V

original communicating entity (EC1) modifies the parameters according to the request of the destination communicating entity, the original communicating entity (EC1) can be in a MIMO system; the invention can be performed by the instructions on the computer-readable storage medium..

Claim 21 differs from D1 in that: the base station comprises at least one transmitter, and a computing device; the operations on the computer-readable storage medium also comprise transmitting the predistorted signal from the transmitter to the receiver via the propagation path.

Therefore claim 21 involves novelty and meets the criteria set out in PCT 33(2).

1.6 Claims 22-27 are directly dependent on independent claim 21. So claims 22-27 involve novelty and meet the criteria set out in PCT 33(2).

2. INVENTITVE STEP

2.1 D1 discloses (see description paragraphs 69 -237)that the modification of focusing at the destination of an original communicating entity (EC1) is requested by the destination communicating entity (EC2) for a following instant; the original communicating entity (EC1) modifies the parameters according to the request of the destination communicating entity. It is well known in the art that the transmitter transmits the signal and the receiver receives the transmitted signal in a communication process. It is the common knowledge for a person skilled in the art that at the following instant disclosed in D1, the original communicating entity (EC1) transmits the predistorted signal to the destination communicating entity (EC2) via the propagation path and the destination communicating entity (EC2) receives the predistorted signal. The person skilled in the art considering his common technology in combination based on D1 would obviously arrive at the subject-matter of claim 1 without exercising an inventive step. So the subject-matter of claim 1 does not involve an inventive step and does not meet the criteria set out in PCT Article 33(3).

2.2 Claim 2 is dependent on claim 1. It is well known in the art that an estimation of a delay, an estimation of a doppler frequency, an estimation of a direction of arrival, an estimation of a direction of depature, a complex amplitude of the propagationpath are common path parameter information. The person skilled in the art considering his common technology in combination based on D1 would obviously arrive at the subject-matter of claim 2 without exercising an inventive step. So the subject-matter of claim 2 does not involve an inventive step and does not meet the criteria set out in PCT Article 33(3).

2.3 Claim 3 is dependent on claim 2. It is well known in the art that an estimation of a polarization status of the propagation path is common path parameter information. The person skilled in the art considering his common technology in combination based on D1 would obviously arrive at the subject-matter of claim 3 without exercising an inventive step. So the subject-matter of claim 3 does not involve an inventive step and does not meet the criteria set out in PCT Article 33(3).

2.4 Claim 4 is dependent on claim 1. It is well known in the art that the common estimation technique to obtain the path parameter information includes a maximum likelihood estimation algorthm, periodogram, correlatorgram, spectral-based methods, Bartlett beamformers, Capon beamformers, subspace-based techniques, MUSIC, ESPRIT, approximation of the maximum-likelihood method based on iterative schemes, SAGE, RiMAX, maximum-a-posteriori based methods, Evidence framework, Bayesian techniques, tracking algorithms, the Kalman filtering techniques, enhanced Kalman filtering techniques, particle filtering techniques, and least square error methods. The person skilled in the art considering his common technology in combination based on D1 would obviously arrive at the subject-matter of claim 4 without exercising an inventive step. So the subject-matter of claim 4 does not involve an inventive step and does not meet the criteria set out in PCT Article 33(3).

2.5 Claim 5 is dependent on claim 1. D1 discloses (see description paragraphs 69 -237) that the communication entities are each comprised of MIMO or SISO wireless communication system. The person skilled in the art considering his common technology in combination based on D1 would obviously arrive at the subject-matter of claim 5 without exercising an inventive step. So the subject-matter of claim 5 does not involve an inventive step and does not meet the criteria set out in PCT Article 33(3).

(see Supplemental Box)

Supplemental Box

In case **the space in any of the preceding boxes is not sufficient.**

Continuation of: Box No. V

2.6 Claim 6 is dependent on claim 1. D1 discloses (see description paragraphs 69 -237)that the communication entities are each comprised of MIMO or SISO wireless communication system. The person skilled in the art considering his common technology in combination based on D1 would obviously arrive at the subject-matter of claim 6 without exercising an inventive step. So the subject-matter of claim 6 does not involve an inventive step and does not meet the criteria set out in PCT Article 33(3).

2.7 Claim 7 is dependent on claim 1. It is well known in the art that using the system responses illustrates the states of the difference systems in order to remove the impact of the systems. So it is the common knowledge for a person skilled in the art that a system response estimation of the first signal is transmitted from the receiver to the transmitter, and a second signal is predistorted at the transmitter according to the system response estimation. The person skilled in the art considering his common technology in combination based on D1 would obviously arrive at the subject-matter of claim 7 without exercising an inventive step. So the subject-matter of claim 7 does not involve an inventive step and does not meet the criteria set out in PCT Article 33(3).

2.8 Claim 8 is dependent on claim 1. It is well known in the art that using the joint processing technique to equalizing the predistorted signal at the receiver in a coordinated multiple-point system is to improve the perfomance of the receiver. The person skilled in the art considering his common technology in combination based on D1 would obviously arrive at the subject-matter of claim 8 without exercising an inventive step. So the subject-matter of claim 8 does not involve an inventive step and does not meet the criteria set out in PCT Article 33(3).

2.9 Claim 9 is dependent on claim 8. It is well known in the art that using the joint processing technique to equalizing the predistorted signal at the receiver in a coordinated multiple-point system is to improve the perfomance of the receiver. The person skilled in the art considering his common technology in combination based on D1 would obviously arrive at the subject-matter of claim 9 without exercising an inventive step. So the subject-matter of claim 9 does not involve an inventive step and does not meet the criteria set out in PCT Article 33(3).

2.10 Claim 10 is dependent on claim 1.D1 discloses (see description paragraphs 69 -237) that the communicating entity can be a base station or a mobile terminal. D1 discloses the appendant features of dependent claim 10. So the subject-matter of claim 10 does not involve an inventive step and does not meet the criteria set out in PCT Article 33(3).

2.11 Claim 11 is dependent on claim 1. D2 discloses that (see pages37-39, fig. 1) a communication system comprises a plutality of receiver and a plurality of transmitter, and the plurality of propagation paths are formed between the plurality of transmitters and the plurality of receivers, and the predistorting techniques can be used in the system. Said features as described in D2 are providing the same advantages that they can improve the perfomance of the system.Therefore it would be obvious for a person skilled in the art to apply the teaching of D2 to D1. A person skilled in the art considering D2 in combination with the common knowledge based on D1 would obviously arrive at the subject-matter of claim 11 without exercising an inventive step. So the subject-matter of claim 11 does not involve an inventive step and does not meet the criteria set out in PCT Article 33(3).

2.12 D1 discloses (see description paragraphs 69 -237)that the modification of focusing at the destination of an original communicating entity (EC1) is requested by the destination communicating entity (EC2) for a following instant; the original communicating entity (EC1) modifies the parameters according to the request of the destination communicating entity. It is well known in the art that the transmitter transmits the signal and the receiver receives the transmitted signal in a communication process. It is the common knowledge for a person skilled in the art that at the following instant disclosed in D1, the original communicating entity (EC1) transmits the predistorted signal to the destination communicating entity (EC2) via the propagation path. The person skilled in the art considering his common technology in combination based on D1 would obviously arrive at the subject-matter of claim 12 without exercising an inventive step. So the subject-matter of claim 12 does not involve an inventive step and does not meet the criteria set out in PCT Article 33(3).

2.13 Claim 13 is dependent on claim 12. It is well known in the art that an estimation of a delay, an estimation of a doppler frequency, an estimation of a direction of arrival, an estimation of a direction of depature, a complex amplitude of the propagationpath are

(see Supplemental Box)

Supplemental Box

In case **the space in any of the preceding boxes is not sufficient.**

Continuation of: Box No. V

common path parameter information. The person skilled in the art considering his common technology in combination based on D1 would obviously arrive at the subject-matter of claim 13 without exercising an inventive step. So the subject-matter of claim 13 does not involve an inventive step and does not meet the criteria set out in PCT Article 33(3).

2.14 Claim 14 is dependent on claim 12. It is well known in the art that an estimation of a polarization status of the propagation path is common path parameter information. The person skilled in the art considering his common technology in combination based on D1 would obviously arrive at the subject-matter of claim 14 without exercising an inventive step. So the subject-matter of claim 14 does not involve an inventive step and does not meet the criteria set out in PCT Article 33(3).

2.15 Claim 15 is dependent on claim 12. It is well known in the art that the common estimation technique to obtain the path parameter information includes a maximum likelihood estimation algorthm, periodogram, correlatorgram, spectral-based methods, Bartlett beamformers, Capon beamformers, subspace-based techniques, MUSIC, ESPRIT, approximation of the maximum-likelihood method based on iterative schemes, SAGE, RiMAX, maximum-a-posteriori based methods, Evidence framework, Bayesian techniques, tracking algorithms, the Kalman filtering techniques, enhanced Kalman filtering techniques, particle filtering techniques, and least square error methods. The person skilled in the art considering his common technology in combination based on D1 would obviously arrive at the subject-matter of claim 15 without exercising an inventive step. So the subject-matter of claim 15 does not involve an inventive step and does not meet the criteria set out in PCT Article 33(3).

2.16 Claim 16 is dependent on claim 12. D1 discloses (see description paragraphs 69 -237)that the communication entitics are each comprised of MIMO or SISO wireless communication system. The person skilled in the art considering his common technology in combination based on D1 would obviously arrive at the subject-matter of claim 16 without exercising an inventive step. So the subject-matter of claim 16 does not involve an inventive step and does not meet the criteria set out in PCT Article 33(3).

2.17 Claim 17 is dependent on claim 12. D1 discloses (see description paragraphs 69 -237)that the communication entities are each comprised of MIMO or SISO wireless communication system. The person skilled in the art considering his common technology in combination based on D1 would obviously arrive at the subject-matter of claim 17 without exercising an inventive step. So the subject-matter of claim 17 does not involve an inventive step and does not meet the criteria set out in PCT Article 33(3).

2.18 Claim 18 is dependent on claim 12. It is well known in the art that using the system responses illustrates the states of the difference systems in order to remove the impact of the systems. So it is the common knowledge for a person skilled in the art that a system response estimation of the first signal is transmitted from the receiver to the transmitter, and a second signal is predistorted at the transmitter according to the system response estimation. The person skilled in the art considering his common technology in combination based on D1 would obviously arrive at the subject-matter of claim 12 without exercising an inventive step. So the subject-matter of claim 12 does not involve an inventive step and does not meet the criteria set out in PCT Article 33(3).

2.19 Claim 19 is dependent on claim 12. It is well known in the art that using the joint processing technique to equalizing the predistorted signal at the receiver in a coordinated multiple-point system is to improve the perfomance of the receiver. The person skilled in the art considering his common technology in combination based on D1 would obviously arrive at the subject-matter of claim 19 without exercising an inventive step. So the subject-matter of claim 19 does not involve an inventive step and does not meet the criteria set out in PCT Article 33(3).

2.20 Claim 20 is dependent on claim 12.D1 discloses (see description paragraphs 69 -237)that the communicating entity can be a base station or a mobile terminal. D1 discloses the appendant features of dependent claim 20. So the subject-matter of claim 20 does not involve an inventive step and does not meet the criteria set out in PCT Article 33(3).

(see Supplemental Box)

Supplemental Box

In case **the space in any of the preceding boxes is not sufficient.**

Continuation of: Box No. V

2.21 D1 discloses (see description paragraphs 69 -237) that the modification of focusing at the destination of an original communicating entity (EC1) is requested by the destination communicating entity (EC2) for a following instant; the original communicating entity (EC1) modifies the parameters according to the request of the destination communicating entity; The communicating entity can be a base station or a mobile terminal; the executable instructions stored on the computer-readable storage medium can perform operations in the invention. It is well known in the art that the transmitter transmits the signal and the receiver receives the transmitted signal in a communication process. It is the common knowledge for a person skilled in the art that at the following instant disclosed in D1, the original communicating entity (EC1) transmits the predistorted signal to the destination communicating entity (EC2) via the propagation path and the original communicating entity (EC2) includes at least one transmitter and a computing device to perform the communication process. The person skilled in the art considering his common technology in combination based on D1 would obviously arrive at the subject-matter of claim 21 without exercising an inventive step. So the subject-matter of claim 21 does not involve an inventive step and does not meet the criteria set out in PCT Article 33(3).

2.22 Claim 22 is dependent on claim 21. It is well known in the art that an estimation of a delay, an estimation of a doppler frequency, an estimation of a direction of arrival, an estimation of a direction of depature, a complex amplitude of the propagationpath are common path parameter information. The person skilled in the art considering his common technology in combination based on D1 would obviously arrive at the subject-matter of claim 22 without exercising an inventive step. So the subject-matter of claim 22 does not involve an inventive step and does not meet the criteria set out in PCT Article 33(3).

2.23 Claim 23 is dependent on claim 21. It is well known in the art that an estimation of a polarization status of the propagation path is common path parameter information. The person skilled in the art considering his common technology in combination based on D1 would obviously arrive at the subject-matter of claim 23 without exercising an inventive step. So the subject-matter of claim 23 does not involve an inventive step and does not meet the criteria set out in PCT Article 33(3).

2.24 Claim 24 is dependent on claim 21. It is well known in the art that the common estimation technique to obtain the path parameter information includes a maximum likelihood estimation algorthm, periodogram, correlatorgram, spectral-based methods, Bartlett beamformers, Capon beamformers, subspace-based techniques, MUSIC, ESPRIT, approximation of the maximum-likelihood method based on iterative schemes, SAGE, RiMAX, maximum-a-posteriori based methods, Evidence framework, Bayesian techniques, tracking algorithms, the Kalman filtering techniques, enhanced Kalman filtering techniques, particle filtering techniques, and least square error methods. The person skilled in the art considering his common technology in combination based on D1 would obviously arrive at the subject-matter of claim 24 without exercising an inventive step. So the subject-matter of claim 24 does not involve an inventive step and does not meet the criteria set out in PCT Article 33(3).

2.25 Claim 25 is dependent on claim 21. D1 discloses (see description paragraphs 69 -237) that the communication entities are each comprised of MIMO or SISO wireless communication system. The person skilled in the art considering his common technology in combination based on D1 would obviously arrive at the subject-matter of claim 25 without exercising an inventive step. So the subject-matter of claim 25 does not involve an inventive step and does not meet the criteria set out in PCT Article 33(3).

2.26 Claim 26 is dependent on claim 21. D1 discloses (see description paragraphs 69 -237) that the communication entities are each comprised of MIMO or SISO wireless communication system. The person skilled in the art considering his common technology in combination based on D1 would obviously arrive at the subject-matter of claim 26 without exercising an inventive step. So the subject-matter of claim 26 does not involve an inventive step and does not meet the criteria set out in PCT Article 33(3).

2.27 Claim 27 is dependent on claim 21. It is well known in the art that using the system responses illustrates the states of the difference systems in order to remove the impact of the systems. So it is the common knowledge for a person skilled in the art that a system response estimation of the first signal is transmitted from the receiver to the transmitter, and a second signal is predistorted at the transmitter according to the system response estimation. The person skilled in the art considering his common technology in combination based on D1 would obviously arrive at the subject-matter of claim 27 without exercising an inventive step. So the subject-matter of claim 27 does not involve an inventive step and does not meet the criteria set out in PCT Article 33(3).

3. INDUSTRIAL APPLICABILITY

The inventions of claims 1-27 can be made or used industrially, so they are industrially applicable, meeting the provision of PCT Article 33(4).

PTO/SB/08a (01-10)
Approved for use through 07/31/2012. OMB 0651-0031
U.S. Patent and Trademark Office; U.S. DEPARTMENT OF COMMERCE
Under the Paperwork Reduction Act of 1995, no persons are required to respond to a collection of information unless it contains a valid OMB control number.

INFORMATION DISCLOSURE STATEMENT BY APPLICANT (**Not for submission under 37 CFR 1.99)**		
	Application Number	
	Filing Date	2011-07-28
	First Named Inventor	Xuefeng YIN
	Art Unit	
	Examiner Name	
	Attorney Docket Number	I1013.10038US01

U.S.PATENTS						Remove
Examiner Initial*	Cite No	Patent Number	Kind Code[1]	Issue Date	Name of Patentee or Applicant of cited Document	Pages,Columns,Lines where Relevant Passages or Relevant Figures Appear
	1					
If you wish to add additional U.S. Patent citation information please click the Add button.						Add

U.S.PATENT APPLICATION PUBLICATIONS						Remove
Examiner Initial*	Cite No	Publication Number	Kind Code[1]	Publication Date	Name of Patentee or Applicant of cited Document	Pages,Columns,Lines where Relevant Passages or Relevant Figures Appear
	1	20110103457	A1	2011-05-05	Phan Huy et al.	
If you wish to add additional U.S. Published Application citation information please click the Add button.						Add

FOREIGN PATENT DOCUMENTS								Remove
Examiner Initial*	Cite No	Foreign Document Number[3]	Country Code[2] ¡	Kind Code[4]	Publication Date	Name of Patentee or Applicant of cited Document	Pages,Columns,Lines where Relevant Passages or Relevant Figures Appear	T[5]
	1	102138309	CN	A	2011-07-27	FRANCE TELECOM	Corresponds to US20110103457A1	☒
	2	2011/012031	WO	A1	2011-02-03	ZTE CORPORATION	English Abstract	☒
If you wish to add additional Foreign Patent Document citation information please click the Add button								Add

NON-PATENT LITERATURE DOCUMENTS	Remove

INFORMATION DISCLOSURE STATEMENT BY APPLICANT (Not for submission under 37 CFR 1.99)	Application Number	
	Filing Date	2011-07-28
	First Named Inventor	Xuefeng YIN
	Art Unit	
	Examiner Name	
	Attorney Docket Number	I1013.10038US01

Examiner Initials*	Cite No	Include name of the author (in CAPITAL LETTERS), title of the article (when appropriate), title of the item (book, magazine, journal, serial, symposium, catalog, etc), date, pages(s), volume-issue number(s), publisher, city and/or country where published.	T5
	1	International Search Report dated 05-03-2012 as received in application no. PCT/CN2011/077718	☐
	2	Written Opinion of the International Searching Authority dated 05-03-2012 as received in application no. PCT/ CN2011/077718	☐
	3	"3rd Generation Partnership Project; Technical Specification Group Radio Access Network; Further Advancements for E-UTRA Physical Layer Aspects (Release 9)", 3GPP TR36.814, V0.4.1(2009-02), pp 1-31	☐
	4	Sampath et al., "Pre-Equalization for MIMO Wireless Channels with Delay Spread", 52nd Vehicular Technology Conference, IEEE VTS-Fall VTC 2000, Vol. 3, pp 1175-1178	☐
	5	Holfeld et al., "Order-Recursive Precoding for Cooperative Multi-Point Transmission", Proceedings of the International ITG/IEEE Workshop on Smart Antennas (WSA 2010), 2010, pp 39-45	☐
	6	Saleeb, "Design of a smart antenna for reducing co-channel interference in cellular mobile communications", Antennas and Propagation Society International Symposium, IEEE, 1999, Vol. 3, pp 1620 -1623	☐
	7	Fleury et al., "Channel Parameter Estimation in Mobile Radio Environments Using the SAGE Algorithm", IEEE Journal on Selected Areas in Communications, 1999, Vol. 17, Issue 3, pp 434-450	☐
	8	Odhah et al., "Frequency domain pre-equalization for MIMO broadband CDMA communication systems", National Radio Science Conference, 2009(NRSC 2009), 17-19 March 2009, pp 1 - 8	☐
	9	Ning et al., "Joint Processing Precoding for Coordinated Multi-Point Transmission in LTE-A", ZTE Communications, Feb. 2010, Vol.16, No.1, pp 37-39, <http://wwwen.zte.com.cn/endata/magazine/ztecommunications/2010Year/no1/ articles/201003/t20100321_181531.html>	☐
If you wish to add additional non-patent literature document citation information please click the Add button Add			

INFORMATION DISCLOSURE STATEMENT BY APPLICANT (Not for submission under 37 CFR 1.99)	Application Number	
	Filing Date	2011-07-28
	First Named Inventor	Xuefeng YIN
	Art Unit	
	Examiner Name	
	Attorney Docket Number	I1013.10038US01

EXAMINER SIGNATURE			
Examiner Signature		Date Considered	

*EXAMINER: Initial if reference considered, whether or not citation is in conformance with MPEP 609. Draw line through a citation if not in conformance and not considered. Include copy of this form with next communication to applicant.

[1] See Kind Codes of USPTO Patent Documents at www.USPTO.GOV or MPEP 901.04. [2] Enter office that issued the document, by the two-letter code (WIPO Standard ST.3). [3] For Japanese patent documents, the indication of the year of the reign of the Emperor must precede the serial number of the patent document. [4] Kind of document by the appropriate symbols as indicated on the document under WIPO Standard ST.16 if possible. [5] Applicant is to place a check mark here if English language translation is attached.

INFORMATION DISCLOSURE STATEMENT BY APPLICANT (Not for submission under 37 CFR 1.99)	Application Number	
	Filing Date	2011-07-28
	First Named Inventor	Xuefeng YIN
	Art Unit	
	Examiner Name	
	Attorney Docket Number	I1013.10038US01

CERTIFICATION STATEMENT

Please see 37 CFR 1.97 and 1.98 to make the appropriate selection(s):

☐ That each item of information contained in the information disclosure statement was first cited in any communication from a foreign patent office in a counterpart foreign application not more than three months prior to the filing of the information disclosure statement. See 37 CFR 1.97(e)(1).

OR

☐ That no item of information contained in the information disclosure statement was cited in a communication from a foreign patent office in a counterpart foreign application, and, to the knowledge of the person signing the certification after making reasonable inquiry, no item of information contained in the information disclosure statement was known to any individual designated in 37 CFR 1.56(c) more than three months prior to the filing of the information disclosure statement. See 37 CFR 1.97(e)(2).

☐ See attached certification statement.

☐ Fee set forth in 37 CFR 1.17 (p) has been submitted herewith.

☒ None

SIGNATURE

A signature of the applicant or representative is required in accordance with CFR 1.33, 10.18. Please see CFR 1.4(d) for the form of the signature.

Signature	/R. Burns Israelsen/ Reg. #42685	Date (YYYY-MM-DD)	2012-07-16
Name/Print	R. Burns Israelsen	Registration Number	42,685

This collection of information is required by 37 CFR 1.97 and 1.98. The information is required to obtain or retain a benefit by the public which is to file (and by the USPTO to process) an application. Confidentiality is governed by 35 U.S.C. 122 and 37 CFR 1.14. This collection is estimated to take 1 hour to complete, including gathering, preparing and submitting the completed application form to the USPTO. Time will vary depending upon the individual case. Any comments on the amount of time you require to complete this form and/or suggestions for reducing this burden, should be sent to the Chief Information Officer, U.S. Patent and Trademark Office, U.S. Department of Commerce, P.O. Box 1450, Alexandria, VA 22313-1450. DO NOT SEND FEES OR COMPLETED FORMS TO THIS ADDRESS. **SEND TO: Commissioner for Patents, P.O. Box 1450, Alexandria, VA 22313-1450.**

Privacy Act Statement

The Privacy Act of 1974 (P.L. 93-579) requires that you be given certain information in connection with your submission of the attached form related to a patent application or patent. Accordingly, pursuant to the requirements of the Act, please be advised that: (1) the general authority for the collection of this information is 35 U.S.C. 2(b)(2); (2) furnishing of the information solicited is voluntary; and (3) the principal purpose for which the information is used by the U.S. Patent and Trademark Office is to process and/or examine your submission related to a patent application or patent. If you do not furnish the requested information, the U.S. Patent and Trademark Office may not be able to process and/or examine your submission, which may result in termination of proceedings or abandonment of the application or expiration of the patent.

The information provided by you in this form will be subject to the following routine uses:

1. The information on this form will be treated confidentially to the extent allowed under the Freedom of Information Act (5 U.S.C. 552) and the Privacy Act (5 U.S.C. 552a). Records from this system of records may be disclosed to the Department of Justice to determine whether the Freedom of Information Act requires disclosure of these record s.

2. A record from this system of records may be disclosed, as a routine use, in the course of presenting evidence to a court, magistrate, or administrative tribunal, including disclosures to opposing counsel in the course of settlement negotiations.

3. A record in this system of records may be disclosed, as a routine use, to a Member of Congress submitting a request involving an individual, to whom the record pertains, when the individual has requested assistance from the Member with respect to the subject matter of the record.

4. A record in this system of records may be disclosed, as a routine use, to a contractor of the Agency having need for the information in order to perform a contract. Recipients of information shall be required to comply with the requirements of the Privacy Act of 1974, as amended, pursuant to 5 U.S.C. 552a(m).

5. A record related to an International Application filed under the Patent Cooperation Treaty in this system of records may be disclosed, as a routine use, to the International Bureau of the World Intellectual Property Organization, pursuant to the Patent Cooperation Treaty.

6. A record in this system of records may be disclosed, as a routine use, to another federal agency for purposes of National Security review (35 U.S.C. 181) and for review pursuant to the Atomic Energy Act (42 U.S.C. 218(c)).

7. A record from this system of records may be disclosed, as a routine use, to the Administrator, General Services, or his/her designee, during an inspection of records conducted by GSA as part of that agency's responsibility to recommend improvements in records management practices and programs, under authority of 44 U.S.C. 2904 and 2906. Such disclosure shall be made in accordance with the GSA regulations governing inspection of records for this purpose, and any other relevant (i.e., GSA or Commerce) directive. Such disclosure shall not be used to make determinations about individuals.

8. A record from this system of records may be disclosed, as a routine use, to the public after either publication of the application pursuant to 35 U.S.C. 122(b) or issuance of a patent pursuant to 35 U.S.C. 151. Further, a record may be disclosed, subject to the limitations of 37 CFR 1.14, as a routine use, to the public if the record was filed in an application which became abandoned or in which the proceedings were terminated and which application is referenced by either a published application, an application open to public inspections or an issued patent.

9. A record from this system of records may be disclosed, as a routine use, to a Federal, State, or local law enforcement agency, if the USPTO becomes aware of a violation or potential violation of law or regulation.

(12) 按照专利合作条约所公布的国际申请

(19) 世界知识产权组织
国 际 局

(43) 国际公布日
2011 年 2 月 3 日 (03.02.2011)

PCT

(10) 国际公布号
WO 2011/012031 A1

(51) 国际专利分类号:
H04B 1/707 (2011.01)

(21) 国际申请号: PCT/CN2010/074103

(22) 国际申请日: 2010 年 6 月 18 日 (18.06.2010)

(25) 申请语言: 中文

(26) 公布语言: 中文

(30) 优先权:
200910161041.8 2009 年 7 月 30 日 (30.07.2009) CN

(71) 申请人 (对除美国外的所有指定国): **中兴通讯股份有限公司 (ZTE CORPORATION)** [CN/CN]; 中国广东省深圳市南山区高新技术产业园科技南路中兴通讯大厦, Guangdong 518057 (CN)。

(72) 发明人; 及
(75) 发明人/申请人 (仅对美国): **周园 (ZHOU, Yuan)** [CN/CN]; 中国广东省深圳市南山区高新技术产业园科技南路中兴通讯大厦, Guangdong 518057 (CN)。

(74) 代理人: 北京派特恩知识产权代理事务所(普通合伙) (CHINA PAT INTELLECTUAL PROPERTY OFFICE); 中国北京市海淀区知春路 113 号 0717 室, Beijing 100086 (CN)。

(81) 指定国 (除另有指明，要求每一种可提供的国家保护): AE, AG, AL, AM, AO, AT, AU, AZ, BA, BB, BG, BH, BR, BW, BY, BZ, CA, CH, CL, CN, CO, CR, CU, CZ, DE, DK, DM, DO, DZ, EC, EE, EG, ES, FI, GB, GD, GE, GH, GM, GT, HN, HR, HU, ID, IL, IN, IS, JP, KE, KG, KM, KN, KP, KR, KZ, LA, LC, LK, LR, LS, LT, LU, LY, MA, MD, ME, MG, MK, MN, MW, MX, MY, MZ, NA, NG, NI, NO, NZ, OM, PE, PG, PH, PL, PT, RO, RS, RU, SC, SD, SE, SG, SK, SL, SM, ST, SV, SY, TH, TJ, TM, TN, TR, TT, TZ, UA, UG, US, UZ, VC, VN, ZA, ZM, ZW。

(84) 指定国 (除另有指明，要求每一种可提供的地区保护): ARIPO (BW, GH, GM, KE, LR, LS, MW, MZ, NA, SD, SL, SZ, TZ, UG, ZM, ZW), 欧亚 (AM, AZ, BY, KG, KZ, MD, RU, TJ, TM), 欧洲 (AL, AT, BE, BG, CH, CY, CZ, DE, DK, EE, ES, FI, FR, GB, GR, HR, HU, IE, IS, IT, LT, LU, LV, MC, MK, MT, NL, NO, PL, PT, RO, SE, SI, SK, SM, TR), OAPI (BF, BJ, CF, CG, CI, CM, GA, GN, GQ, GW, ML, MR, NE, SN, TD, TG)。

[见续页]

(54) Title: METHOD AND RECEIVER FOR DATA RECEPTION IN CDMA COMMUNICATION SYSTEM

(54) 发明名称 : 一种码分多址通信系统中的数据接收方法及接收机

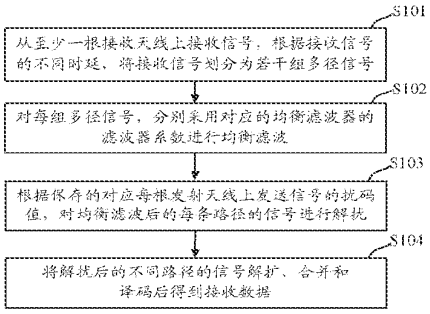

图 1 /Fig.1

S101 receiving signals from at least one reception antenna, dividing received signals into several groups of multi-path signals according to different time delay of received signals
S102 carrying out equalization filtering for each group of multi-path signals with filter coefficients of corresponding equalization filters respectively
S103 according to stored scrambling code values corresponding to transmission signals of each transmission antenna, descrambling signals of each path that have been carried out equalization filtering
S104 despreading, mixing, and decoding descrambled signals of different paths to obtain received data

(57) Abstract: A method and a receiver for data reception in a CDMA communication system are provided, so as to solve the problem of narrow application and unreliable performance existed in prior data reception methods. In the method, a receiver receives signals from at least one reception antenna, divides the signals into signals corresponding to different paths, respectively carries out equalization filtering for each group of multi-path signals, and descrambles the signals of each path. The descrambled signals of each path are despreaded, mixed, and decoded to obtain the received data. With a equalization reception process mode in the diversity reception method, data can be received effectively in conditions of high rate communication mode and bad channel quality, such that the reliability and the reception performance of the data reception method can be enhanced.

[见续页]

WO 2011/012031 A1

本国际公布:
— 包括国际检索报告(条约第 21 条(3))。

(57) **摘要**:

提供一种码分多址通信系统中的数据接收方法及接收机，用以解决现有数据接收方法中存在的应用范围窄，性能不可靠的问题。该方法中，接收机从至少一根接收天线接收信号，将该信号划分为对应不同路径的信号，将每组多径信号分别进行均衡滤波，对每条路径的信号进行解扰。将解扰后的每条路径的信号解扩、合并和译码后获得接收数据。依靠该分集接收方法中的均衡接收处理方式，在高速通信方式及信道质量较差的情况下，也能够有效地接收数据，从而提高了数据接收方法的可靠性和接收性能。

一种码分多址通信系统中的数据接收方法及接收机

技术领域

本发明涉及通信技术领域，尤其涉及一种码分多址通信系统中的数据接收方法及接收机。

背景技术

随着无线通信技术的飞速发展，为了突破码分多址通信系统中数据量的传输受限的瓶颈，并且提高码分多址通信系统的可靠性，在码分多址通信系统中可以采用引入先进技术的接收方法来解决。采用了先进技术的接收方法逐渐被应用到单输入单输出（Single Input Single Output，SISO）通信系统中，以及多输入多输出（Multiple Input Multiple Output，MIMO）通信系统中，例如无线局域网（Wireless Local Area Network，WLAN）和第三代移动通信技术（3rd-generation，3G）等移动通讯网中。

在现有技术中采用的先进技术的接收方法包括分集接收方法，例如RAKE 接收机、GRAKE 接收机以及 SIC-RAKE 接收机等，都是采用了分集接收技术的接收机。采用分集接收方法可以提高系统的接收性能增益，但是由于该分集接收方法在高速通信系统中，或者在信道质量比较差时，其接收收据的性能也会下降。因此，在码分多址通信系统中急需一种应用范围广，并且性能可靠的接收方法。

发明内容

有鉴于此，本发明提供一种码分多址通信系统中的数据接收方法及接收机，用以解决现有技术码分多址通信系统中数据接收方法应用范围窄，性能不可靠的问题。

本发明提出一种码分多址通信系统中的数据接收方法，包括:

接收机从至少一根接收天线上接收信号，根据接收到的信号的时延，将接收信号划分为若干组多径信号;

接收机对每组多径信号分别进行均衡滤波;

接收机对均衡滤波后的信号进行解扰;

接收机将解扰后的信号解扩、合并和译码后获得接收数据。

所述将该信号划分为对应不同路径的信号之前，该方法还包括：对接收到的信号进行滤波处理。

所述接收机对每组多径信号分别进行均衡滤波为:

将所述每组多径信号分别发送到对应的滤波器组;

在每个滤波器组中，对所述多径信号中每根接收天线接收的信号，采用所述滤波器组中对应的滤波器进行滤波。

所述接收天线的数量为两根以上，所述接收机对均衡滤波后的信号进行解扰之前，该方法还包括:

根据发射天线的数量，选择对应的预编码矩阵;

根据所述选择的预编码矩阵，在所述信号中分离出每根发射天线发射的信号。

所述接收机将解扰后的信号解扩、合并和译码后获得接收数据为:

根据解扰后的每条路径的信号的子信号，以及与所述子信号对应的扩频码，获取每条路径的解扩信号;

将所述每条路径的信号的解扩信号进行累加，将该累加值作为译码器的输入值，根据该译码器的输出值获取接收数据。

该方法还包括:

根据从每根接收天线接收的多径信号，以及进行均衡滤波处理后的每条路径的信号，计算与每条路径的信号对应的每个滤波器系数，并更新对

应的滤波器系数。

一种码分多址通信系统中的接收机，该接收机包括：接收多径搜索分离模块、滤波模块、解扰模块、解扩模块、合并和译码模块；其中，

所述接收多径搜索分离模块，用于从至少一根接收天线上接收信号，根据接收到的信号的时延，将该信号划分为若干组多径信号；

所述滤波模块，用于对每组多径的信号分别进行均衡滤波；

所述解扰模块，用于对均衡滤波后的每条路径的信号进行解扰；

所述解扩模块，用于将解扰后的每条路径的信号解扩；

所述合并和译码模块，用于合并解扩后的各路信号，译码后获得接收数据。

所述滤波模块包括：分配单元和滤波单元；其中，

所述分配单元，用于将每组多径信号分别发送到对应的滤波器组；

所述滤波单元，用于在每个滤波器组中，将每组多径信号中每根接收天线接收的信号，采用该滤波器组中对应的滤波器进行滤波。

该接收机还包括解预编码模块，用于根据发射天线的数量，选择对应的预编码矩阵，并根据所述选择的预编码矩阵，在所述每条路径的信号中分离出每根发射天线发射的信号。

所述解扩模块将解扰后的信号解扩为：根据解扰后的每条路径的信号的子信号，以及与所述子信号对应的扩频码，获取每条路径的解扩信号，

所述合并和译码模块合并解扩后的各路信号，译码后获得接收数据为：将所述每条路径的信号的解扩信号进行累加，将该累加值作为译码器的输入值，根据该译码器的输出值获取接收数据。

该接收机还包括滤波系数计算模块，用于根据从每根接收天线接收的多径信号，以及进行均衡滤波处理后的每条路径的信号，计算与每条路径的信号对应的每个滤波器系数，并更新对应的滤波器系数。

所述滤波模块，还用于对所述从至少一根接收天线上接收到的信号进行滤波处理。

本发明码分多址通信系统中的数据接收方法及接收机，接收机从至少一根接收天线上接收信号，将该信号划分为若干组多径信号，将每组多径信号分别进行均衡滤波，对该每条路径的信号进行解扰，将解扰后的每条路径的信号解扩、译码后获得接收数据。本发明通过在分集接收方法中添加均衡接收处理方式，使该数据接收方法在高速通信方式下，及在信道质量比较差时，也能够有效的接收数据，从而提高了数据接收的可靠性和接收性能。

附图说明

图 1 为本发明实施例提供的码分多址通信系统中数据接收的方法流程示意图；

图 2 为本发明实施例提供的 SISO 通信系统中进行数据接收的方法流程示意图；

图 3 为本发明实施例提供的 MIMO 通信系统中进行数据接收的方法流程示意图；

图 4 为本发明实施例提供的码分多址通信系统中数据接收机的结构示意图。

具体实施方式

本发明为了有效的提高码分多址通信系统中数据接收的可靠性，提供了一种应用范围很广的码分多址通信系统中的数据接收方法，该方法包括：接收机从至少一根接收天线上接收信号，根据接收到的信号的时延，将该信号划分为若干组多径信号，将每组多径信号分别进行均衡滤波，对该均衡滤波后的每条路径的信号进行解扰，将解扰后的每条路径的信号解扩、

合并和译码后获得接收数据。在本发明实施例中通过在该分集接收方法中添加均衡接收处理方式，使该数据接收方法在高速通信方式下，及在信道质量比较差时，也能够有效的接收数据，从而提高了数据接收的可靠性和接收性能。

下面结合说明书附图，对本发明实施例进行详细说明。

图 1 为本发明实施提供的码分多址通信系统中数据接收的方法流程示意图，如图 1 所示，该方法包括以下步骤:

步骤 S101: 接收机从至少一根接收天线上接收信号，根据接收到的信号的不同的时延，将接收信号划分为若干组多径信号。

从每根接收天线上接收信号时，由于不同信号其传输的路径不同，因此，其到达接收机的时延也不同，在本发明实施例中，可以将具有相同时延的信号作为广义上的经同一路径传输过来的信号。

步骤 S102: 接收机对每组多径的信号，分别采用对应的均衡滤波器的滤波器系数进行均衡滤波。

其中，该均衡滤波器的滤波器系数可以为根据需要设定的初始值，或满足接收条件的更新值。在本发明实施例中需要将每条路径的信号分别发送到对应的滤波器组；在每个滤波器组中，对每组多径信号中每根接收天线接收的信号，采用滤波器组中对应的滤波器进行滤波。即对不同路径的信号进行均衡滤波处理，从而消除该不同路径的信号的衰落以及信号中的噪声干扰。

在本发明实施例中为了简化设计，每条路径的信号进行的处理过程相同，从而可以根据路径的数量和资源的数量，选择对每条路径信号进行并行或串行处理。

步骤 S103: 接收机根据保存的对应每根发射天线上发送信号的扰码值，对该均衡滤波处理后的每条路径的信号进行解扰。

由于通过相同的发射天线发送的信号对应的扰码值相同，因此，只要根据发送天线的数量，保存对应每根发送天线上发送的信号的扰码值即可。

步骤 S104：接收机将解扰后的不同路径的信号解扩、合并和译码后得到接收数据。

将解扰后的不同路径的信号解扩包括：根据解扰后的每条路径的信号的子信号对应的扩频码，及该每条路径的信号的子信号，确定对应每条路径的子信号的解扩子信号，将该每条路径对应的解扩子信号进行累加，得到该每条路径的解扩信号。每根发射天线通过不同的码道发送信号，在本发明实施例中称接收天线在每个码道上接收到的信号为子信号，接收天线在多个码道上接收到的子信号构成该接收天线接收到的信号。

本发明实施例中进行译码的过程包括：将每条路径的信号的解扩信号进行累加，获得解扩信号的累加值，将该累加值作为译码器的输入值，则译码器输出值即为采用该接收机获得的接收数据。

为了提高接收机获取不同路径的信号的效率，在本发明实施例中当接收机采用至少一根接收天线接收信号后，可以采用滤波器对该接收到的信号进行滤波，以去除该信号中的噪声干扰。该滤波器可以采用有限冲击响应（Finit Impuls Response，FIR）滤波器，采用该 FIR 滤波器对该信号进行脉冲成形滤波。

在本发明实施例中，为了使均衡滤波器的系数可以根据接收机移动的速率以及数据速率的不同进行更新，从而实现在不同的应用场景下对系统性能以及运算单元的运算负荷之间的平衡处理，在本发明实施例中可以实时的计算该均衡滤波器的滤波器系数，并采用该滤波器系数对该均衡滤波器进行更新。其中该均衡滤波器的滤波器系数的计算过程具体包括：

接收机根据接收到的每组多径信号，及进行均衡滤波处理后的对应路径的信号，确定与该路径的信号对应的每个均衡滤波器的滤波器系数。

其中在具体的确定与该路径的信号对应的每个滤波器系数的过程中，可以将均衡滤波处理后的不同路径的信号，以及该接收机接收到的每条路径的信号，采用递归最小二乘（RLS）法，或最小均方（LMS）算法，计算该每条路径信号对应的该均衡滤波器的滤波器系数。

在确定了每个均衡滤波器的滤波器系数后，可以将该每个均衡滤波器的滤波器系数发送给对应的均衡滤波器，使该每个均衡滤波器的滤波器系数进行更新，更新后使该滤波器在对接收到信号进行处理时，可以采用该更新后的滤波器系数进行均衡滤波处理。

在本发明实施例中当发射天线的数量至少为两根时，发射机可能会对发射数据进行预编码，因此，在本发明实施例对该每条路径的信号进行解扰处理之前，该码分多址通信系统中接收数据的方法应该还包括：根据发射天线的数量，选择对应的预编码矩阵；根据选择的预编码矩阵，在每条路径的信号中分离出每根发射天线发射的信号，将每条路径的信号中相同发射天线发射的信号合并。

下面通过具体的实施例对本发明实施例码分多址通信系统中，数据的接收方法进行说明，图 2 为本发明实施例 SISO 通信系统中，进行数据接收的方法流程示意图，在该 SISO 通信系统中包括一根发射天线、一根接收天线，如图 2 所示，该方法包括以下步骤：

步骤 S201：从接收天线上接收信号，对接收到的信号进行滤波处理。

其中，可以对接收到的信号进行脉冲成形滤波处理。

步骤 S202：进行多路径搜索，根据接收到的信号的时延，将该信号划分为对应不同路径的信号，并分成若干组。

例如，将 2s 时延接收的信号作为第一路径的信号，将 5s 时延接收的信号作为第二路径的信号等。

步骤 S203：将每组多径信号发送到对应的均衡滤波器组，使该均衡滤

波器组中的均衡滤波器根据其保存的滤波器系数对接收到的信号进行滤波处理。

在本发明实施例中由于每组多径信号通过同一根接收天线接收，因此，设置的每个均衡滤波器组中包括一个均衡滤波器。当每组多径信号发送到对应的均衡滤波器组中时，均衡滤波器组中的均衡滤波器对发送过来的信号进行滤波处理。例如，将该第一组多径信号发送到第一均衡滤波器，将该第二组多径信号发送到第二均衡滤波器，将第 N 组多径信号发送到第 N 均衡滤波器等，其中 N 为正整数。使该每个均衡滤波器根据其保存的滤波器系数，对其接收到的信号进行滤波，以去除每条路径的信号中的噪声以及消除该每条路径的信号的衰落。

步骤 S204：根据均衡滤波后的每条路径的信号，以及保存的对应发射天线发射的信号的扰码，将该每条路径的信号进行解扰处理。

由于在本发明实施例中存在一根发射天线，通过该发射天线发射的信号的扰码相同，因此通过接收天线接收到的不同路径的信号，对应的扰码相同，采用该扰码即可对不同路径的信号进行解扰处理。将该均衡滤波后的每条路径的信号，及对应该发射天线发射的信号的扰码的共轭进行乘积运算，将该运算的结果作为该条路径的信号的解扩信号。

步骤 S205：根据解扰后的每条路径的信号的子信号对应的扩频码，及该解扰后的每条路径的信号的子信号，对该每条路径的信号进行解扩。

步骤 S206：将该每条路径的信号的解扩信号进行累加，将该累加值作为译码器的输入值，则该译码器的输出值即为在该 SISO 通信系统中接收到的数据。

在上述实施例中在步骤 S203 和步骤 S204 之间该方法还可以包括：计算每个均衡滤波器的滤波器系数的步骤，在该步骤中接收机根据接收到的每条路径的信号，及进行均衡滤波处理后的对应路径的信号，确定与该路

径的信号对应的均衡滤波器的滤波器系数。

由于码分多址通信系统中进行数据接收的过程是连续的，该接收机采用该计算的滤波器系数更新该均衡滤波器的滤波器系数，使该均衡滤波器能够根据该更新后的滤波器系数，对其接收的信号进行均衡滤波处理。例如，经滤波处理后的每条路径的信号包括：第一路径滤波信号、第二路径滤波信号以及第三路径滤波信号，将该第一路径滤波信号与第一路径的信号，采用递归最小二乘法运算得到滤波器系数 U1，将该第二路径滤波信号与第二路径的信号，采用递归最小二乘法运算得到滤波器系数 U2，将该第三路径滤波信号与第三路径的信号，采用递归最小二乘法运算得到滤波器系数 U3。则可以采用 U1 更新对该第一路径的信号进行均衡滤波处理的，第一均衡滤波器的滤波器系数，采用 U2 更新对该第二路径的信号进行均衡滤波处理的，第二均衡滤波器的滤波器系数，采用 U3 更新对该第三路径的信号进行均衡滤波处理的，第三均衡滤波器的滤波器系数。使该第一、第二以及第三均衡滤波器能够根据更新后的滤波器系数 U1、U2 及 U3，对接收的对应路径的信号进行均衡滤波处理。

图 3 为本发明实施例 MIMO 通信系统中进行数据接收的方法流程示意图，在该 MIMO 通信系统中包括两根以上的发射天线，以及两根以上的接收天线，如图 3 所述，该方法包括以下步骤：

步骤 S301：从 K 根接收天线上接收信号，对从每根接收天线上接收到的信号进行脉冲成形滤波处理。其中，K 为不小于 2 的正整数。

步骤 S302：进行多路径搜索，根据每根接收天线接收到的信号的时延，将每根接收天线接收到的信号划分为 N 条不同路径的信号，并分组，其中 N 为不小于 1 的正整数。

步骤 S303：将每组多径信号分别进行均衡滤波。

具体包括：将每组多径信号分别发送到对应的均衡滤波器组，使该均

衡滤波器组中每个均衡滤波器根据其保存的滤波器系数对接收的信号进行滤波处理。

步骤 S304：获取每组多径信号进行均衡滤波后的对应信号。

步骤 S305：根据接收机从每根接收天线上接收到的每组多径信号，以及均衡滤波后的每条路径的信号，确定对应该每组多径信号的均衡滤波器组中的每个均衡滤波器的滤波器系数。

步骤 S306：根据发射天线的数量，在保存的预编码矩阵中选择对应的预编码矩阵，根据选择的预编码矩阵，将每条路径的信号中每根发射天线发射的信号分离出来。

其中预编码矩阵的大小与发射天线的数量对应，当发射天线的数量比较多时，则预编码矩阵比较大，当发射天线的数量比较少时，则预编码矩阵比较小。根据发射天线的数量，选择对应大小的预编码矩阵，将该经过均衡滤波后的每条路径的信号与该选择的预编码矩阵的共轭装置进行乘积运算，在每条路径中将该每个发射天线发射的信号分离出来。

步骤 S307：根据每条路径的信号中分离出的对应每根发射天线的信号，以及保存的对应该发射天线发送的信号的扰码值，将该每条路径的信号进行解扰处理。

具体包括：将每条路径的信号中分离出的对应每根发射天线的信号，以及保存的对应该发送天线发送的信号的扰码值的共轭进行乘积运算，得到每条路径中每根发射天线发射的信号的解扰值，将该路径中每根发射天线发射的信号的解扰值相加，得到该路径的信号的解扰信号。

例如将该第一路径的信号进行信号流分离后，确定该第一路径的信号中包括第一发射天线发射的第四信号，以及第二发射天线发射的第五信号时，其中第一发射天线发射的信号的扰码为第一扰码，第二发射天线发射的信号的扰码为第二扰码，根据该第四信号与第一扰码的共轭的乘积，以

及第五信号与第二扰码的共轭的乘积的和，将该和作为该第一路径的信号的解扰信号。

步骤 S308：根据解扰后的每条路径的信号中的子信号对应的扩频码，及该解扰后的每条路径的信号中的子信号，对该每条路径的信号进行解扩处理。

对于每条路径的信号中，接收天线通过不同的码道接收的信号称为不同的子信号，每个子信号对应的扩频码不同。例如该第一路径的信号解扰后包括第四信号与第一扰码的共轭的乘积，以及第五信号与第二扰码的共轭的乘积，将第四信号与第一扰码的共轭的乘积后的信号中可能包括第一子信号和第二子信号，第五信号与第二扰码的共轭的乘积后的信号中可能包括第三子信号和第四子信号，分别将该每个子信号与其对应的扩频码相乘后进行累加，将该累加值作为该条路径的信号的解扩处理值。

步骤 S309：将该每条路径的信号的解扩处理值进行累加，将该累加值作为译码器的输入值，则该译码器的输出值即为在该 MIMO 通信系统中接收到的数据。

步骤 S310：根据步骤 S305 中确定的对应该每条路径的信号的均衡滤波器组中的每个均衡滤波器的滤波器系数，更新该对应的均衡滤波器组中的均衡滤波器的滤波器系数。

图 4 为本发明实施例码分多址通信系统中进行数据接收的接收机的结构示意图，如图 4 所示，该接收机包括：

接收多径搜索分离模块 41，用于从至少一根接收天线上接收信号，根据接收到的信号的时延，将该信号划分为对应不同路径的信号；

滤波模块 42，用于对每条路径的信号分别进行均衡滤波；

解扰模块 43，用于对均衡滤波后的每条路径的信号进行解扰；

解扩模块 44，用于将解扰后的信号解扩；

合并和译码模块 45，用于合并解扩后的各路信号，译码后获得接收数据。

所述滤波模块 42 包括:

分配单元 421，用于将每组多径信号分别发送到对应的滤波器组;

滤波单元 422，用于在在每个滤波器组中，将每组多径的信号中每根接收天线接收的信号，采用该滤波器组中对应的滤波器进行滤波。

该接收机还包括:

解预编码模块 46，用于根据发射天线的数量，选择对应的预编码矩阵，根据选择的所述预编码矩阵，在所述每条路径的信号中分离出每根发射天线发射的信号。

所述解扩模块 44 将解扰后的信号解扩为：根据解扰后的每条路径的信号的子信号，以及与所述子信号对应的扩频码，获取每条路径的解扩信号，

所述合并和译码模块 45 合并解扩后的各路信号，译码后获得接收数据为：将所述每条路径的信号的解扩信号进行累加，将该累加值作为译码器的输入值，根据该译码器的输出值获取接收数据。

该接收机还包括:

滤波系数计算模块 47，用于根据从每根接收天线接收的每组多径信号，以及进行均衡滤波处理后的每条路径的信号，计算与该路径的信号对应的每个滤波器系数，采用所述每个滤波器系数更新对应的滤波器系数。

所述滤波模块 42，还用于对所述从至少一根接收天线上接收到的信号进行滤波处理。

本发明实施例提供了一种码分多址通信系统中的数据接收方法及接收机，该方法包括：接收机从至少一根接收天线上接收信号，将该信号划分为对应不同路径的信号，将每组多径信号，分别进行均衡滤波，对该每条路径的信号进行解扰，将解扰后的每条路径的信号解扩、合并和译码后获

得接收数据。在本发明实施例中通过在该分集接收方法中添加均衡接收处理方式，使该数据接收方法在高速通信方式下，及在信道质量比较差时，也能够有效的接收数据，从而提高了数据接收方法的可靠性和接收性能。

显然，本领域的技术人员可以对本发明进行各种改动和变型而不脱离本发明的精神和范围。这样，倘若本发明的这些修改和变型属于本发明权利要求及其等同技术的范围之内，则本发明也意图包含这些改动和变型在内。

权利要求书

1、一种码分多址通信系统中的数据接收方法，其特征在于，该方法包括：

接收机从至少一根接收天线上接收信号，根据接收到的信号的时延，将接收信号划分为若干组多径信号；

接收机对每组多径信号分别进行均衡滤波；

接收机对均衡滤波后的信号进行解扰；

接收机将解扰后的信号解扩、合并和译码后获得接收数据。

2、如权利要求 1 所述的方法，其特征在于，所述将接收信号划分为若干组多径信号之前，该方法还包括：对接收到的信号进行滤波处理。

3、如权利要求 1 所述的方法，其特征在于，所述接收机对每组多径信号分别进行均衡滤波为：

将所述每组多径信号分别发送到对应的滤波器组；

在每个滤波器组中，对所述多径信号中每根接收天线接收的信号，采用所述滤波器组中对应的滤波器进行滤波。

4、如权利要求 1 所述的方法，其特征在于，所述接收天线的数量为两根以上，所述接收机对均衡滤波后的信号进行解扰之前，该方法还包括：

根据发射天线的数量，选择对应的预编码矩阵；

根据所述选择的预编码矩阵，在所述信号中分离出每根发射天线发射的信号。

5、如权利要求 1 所述的方法，其特征在于，所述接收机将解扰后的信号解扩、合并和译码后获得接收数据为：

根据解扰后的每条路径的信号的子信号，以及与所述子信号对应的扩频码，获取每条路径的解扩信号；

将所述每条路径的信号的解扩信号进行累加，将该累加值作为译码器

的输入值，根据该译码器的输出值获取接收数据。

6、如权利要求 1 所述的方法，其特征在于，该方法还包括:

根据从每根接收天线接收的多径信号，以及进行均衡滤波处理后的每条路径的信号，计算与每条路径的信号对应的每个滤波器系数，并更新对应的滤波器系数。

7、一种码分多址通信系统中的接收机，其特征在于，该接收机包括:接收多径搜索分离模块、滤波模块、解扰模块、解扩模块、合并和译码模块；其中，

所述接收多径搜索分离模块，用于从至少一根接收天线上接收信号，根据接收到的信号的时延，将该信号划分为若干组多径信号;

所述滤波模块，用于对每组多径信号分别进行均衡滤波;

所述解扰模块，用于对均衡滤波后的信号进行解扰;

所述解扩模块，用于将解扰后的信号解扩;

所述合并和译码模块，用于合并解扩后的各路信号，译码后获得接收数据。

8、如权利要求 7 所述的接收机，其特征在于，所述滤波模块包括：分配单元和滤波单元；其中，

所述分配单元，用于将多径信号分别发送到对应的滤波器组;

所述滤波单元，用于在每个滤波器组中，将多径信号中每根接收天线接收的信号，采用该滤波器组中对应的滤波器进行滤波。

9、如权利要求 7 所述的接收机，其特征在于，该接收机还包括解预编码模块，用于根据发射天线的数量，选择对应的预编码矩阵，并根据所述选择的预编码矩阵，在所述信号中分离出每根发射天线发射的信号。

10、如权利要求 7 所述的接收机，其特征在于，所述解扩模块将解扰后的信号解扩为：根据解扰后的每条路径的信号的子信号，以及与所述子

信号对应的扩频码，获取每条路径的解扩信号，

所述合并和译码模块合并解扩后的各路信号，译码后获得接收数据为：将所述每条路径的信号的解扩信号进行累加，将该累加值作为译码器的输入值，根据该译码器的输出值获取接收数据。

11、如权利要求 7 所述的接收机，其特征在于，该接收机还包括滤波系数计算模块，用于根据从每根接收天线接收的多径信号，以及进行均衡滤波处理后的每条路径的信号，计算与每条路径的信号对应的每个滤波器系数，并更新对应的滤波器系数。

12、如权利要求 7 所述的接收机，其特征在于，所述滤波模块，还用于对所述从至少一根接收天线上接收到的信号进行滤波处理。

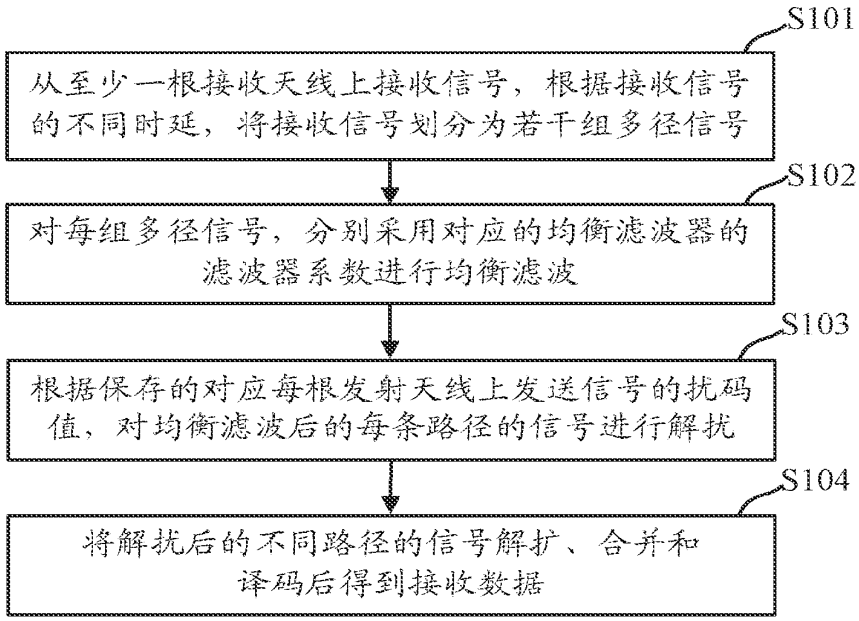
S101
从至少一根接收天线上接收信号，根据接收信号的不同时延，将接收信号划分为若干组多径信号
S102
对每组多径信号，分别采用对应的均衡滤波器的滤波器系数进行均衡滤波
S103
根据保存的对应每根发射天线上发送信号的扰码值，对均衡滤波后的每条路径的信号进行解扰
S104
将解扰后的不同路径的信号解扩、合并和译码后得到接收数据

图 1

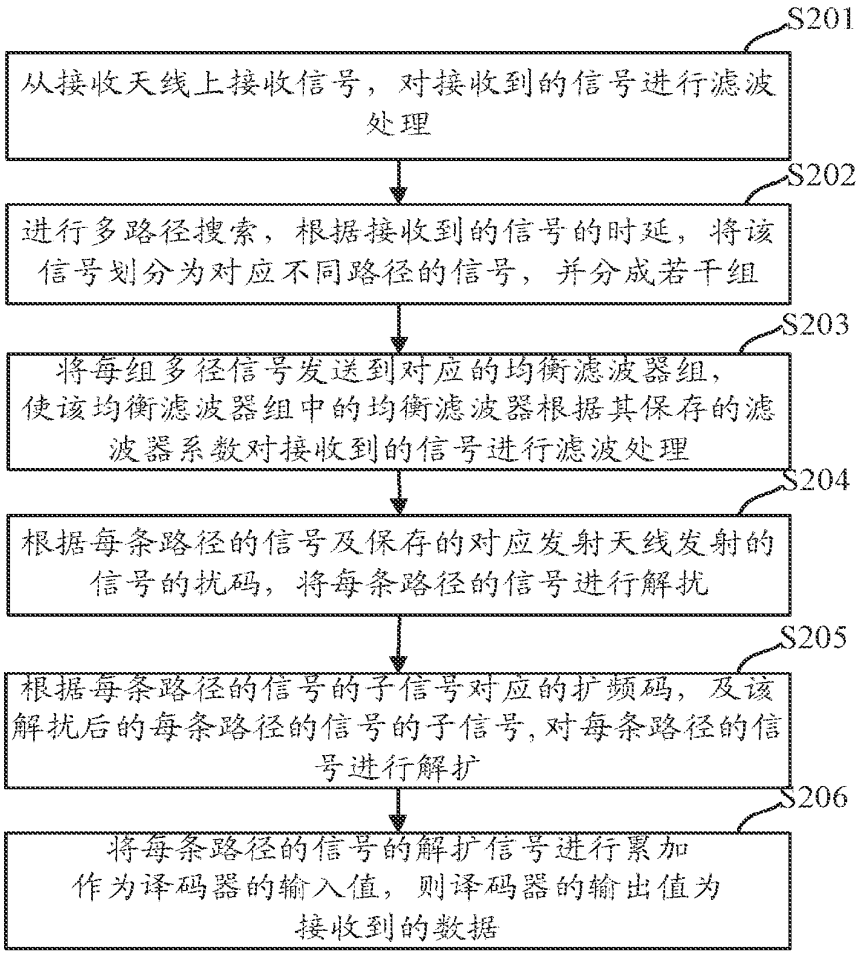
S201
从接收天线上接收信号，对接收到的信号进行滤波处理
S202
进行多路径搜索，根据接收到的信号的时延，将该信号划分为对应不同路径的信号，并分成若干组
S203
将每组多径信号发送到对应的均衡滤波器组，使该均衡滤波器组中的均衡滤波器根据其保存的滤波器系数对接收到的信号进行滤波处理
S204
根据每条路径的信号及保存的对应发射天线发射的信号的扰码，将每条路径的信号进行解扰
S205
根据每条路径的信号的子信号对应的扩频码，及该解扰后的每条路径的信号的子信号，对每条路径的信号进行解扩
S206
将每条路径的信号的解扩信号进行累加作为译码器的输入值，则译码器的输出值为接收到的数据

图 2

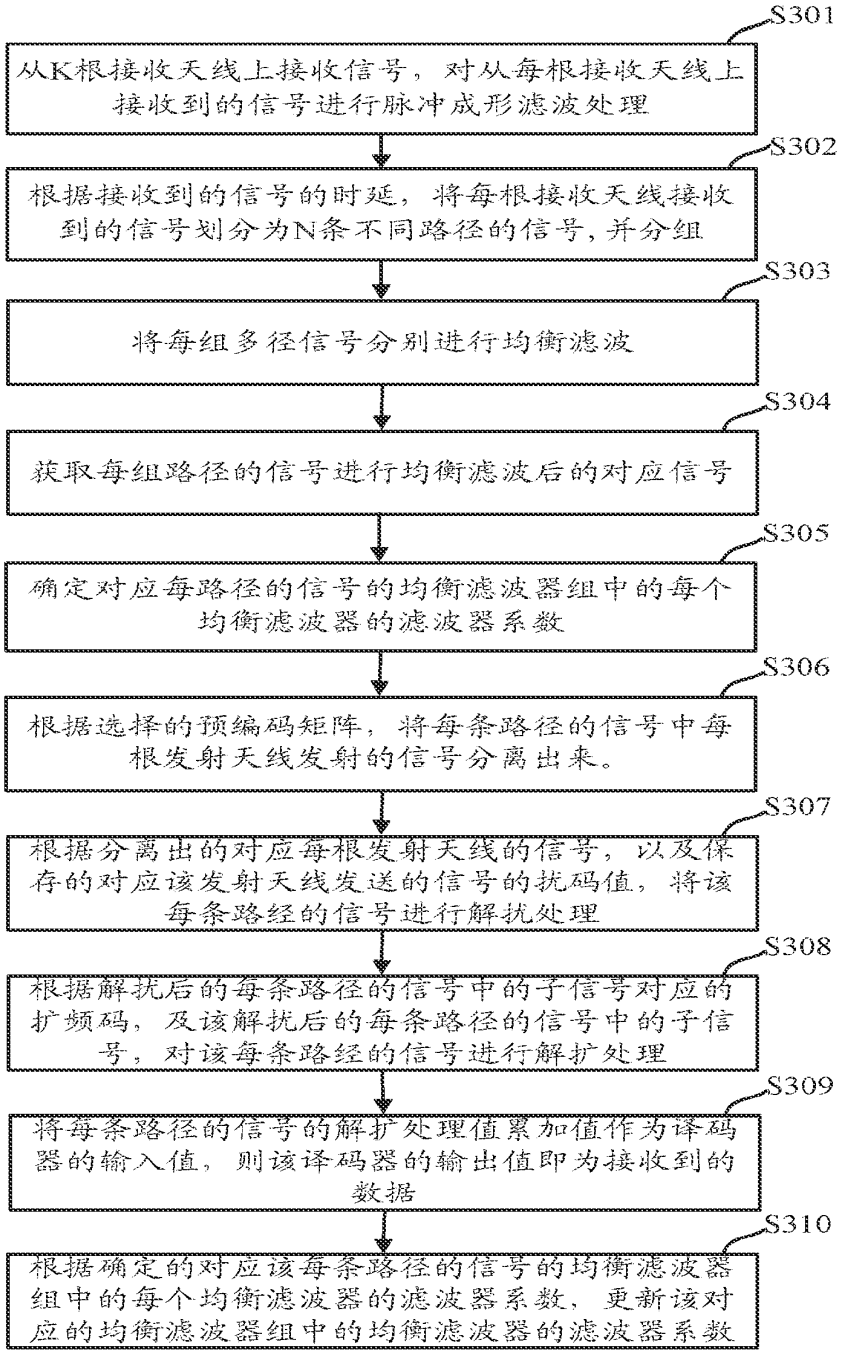
S301
从K根接收天线上接收信号，对从每根接收天线上接收到的信号进行脉冲成形滤波处理
S302
根据接收到的信号的时延，将每根接收天线接收到的信号划分为N条不同路径的信号，并分组
S303
将每组多径信号分别进行均衡滤波
S304
获取每组路径的信号进行均衡滤波后的对应信号
S305
确定对应每路径的信号的均衡滤波器组中的每个均衡滤波器的滤波器系数
S306
根据选择的预编码矩阵，将每条路径的信号中每根发射天线发射的信号分离出来。
S307
根据分离出的对应每根发射天线的信号，以及保存的对应该发射天线发送的信号的扰码值，将该每条路经的信号进行解扰处理
S308
根据解扰后的每条路径的信号中的子信号对应的扩频码，及该解扰后的每条路径的信号中的子信号，对该每条路经的信号进行解扩处理
S309
将每条路径的信号的解扩处理值累加值作为译码器的输入值，则该译码器的输出值即为接收到的数据
S310
根据确定的对应该每条路径的信号的均衡滤波器组中的每个均衡滤波器的滤波器系数，更新该对应的均衡滤波器组中的均衡滤波器的滤波器系数

图 3

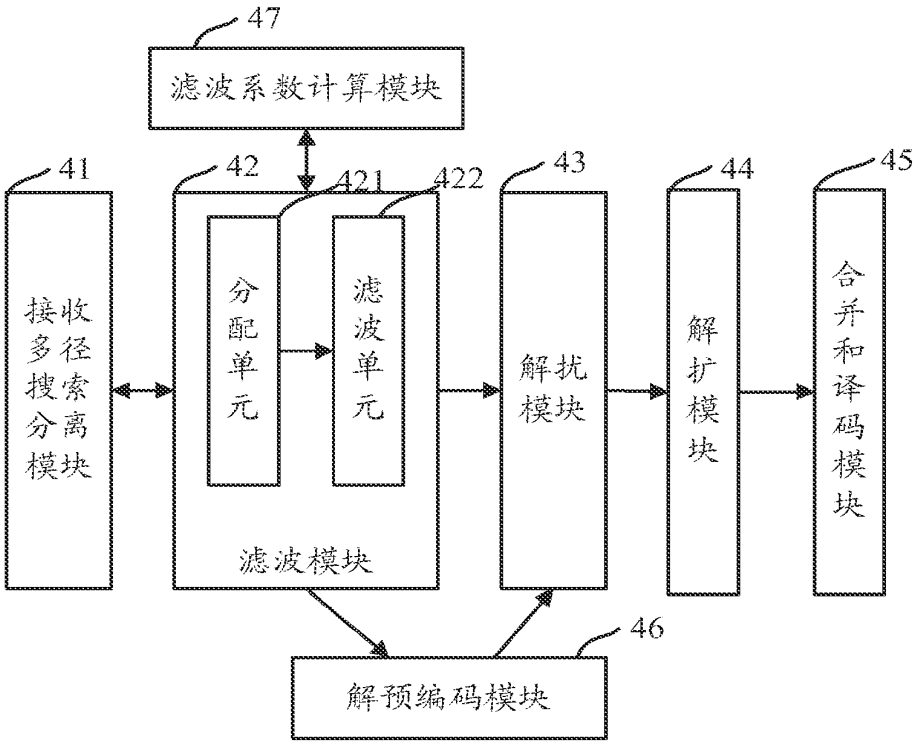
47
滤波系数计算模块
41
接收多径搜索分离模块
42
421
422
分配单元
滤波单元
滤波模块
43
解扰模块
44
解扩模块
45
合并和译码模块
46
解预编码模块

图 4

INTERNATIONAL SEARCH REPORT

International application No.
PCT/CN2010/074103

A. CLASSIFICATION OF SUBJECT MATTER

H04B 1/707 (2006.01) i

According to International Patent Classification (IPC) or to both national classification and IPC

B. FIELDS SEARCHED

Minimum documentation searched (classification system followed by classification symbols)
IPC: H04B 1/-

Documentation searched other than minimum documentation to the extent that such documents are included in the fields searched

Electronic data base consulted during the international search (name of data base and, where practicable, search terms used)
CPRSABS,CNKI,WPI,EPODOC: CDMA, receive, delay, multi path, filter, descramble, despread, decode

C. DOCUMENTS CONSIDERED TO BE RELEVANT

Category*	Citation of document, with indication, where appropriate, of the relevant passages	Relevant to claim No.
PX	CN101616376A (ZTE CORP) 30 Dec. 2009 (30.12.2009) The whole document	1-12
Y	CN1332544A (INST TELECOM TRANSMISSION MIN INFORMATION) 23 Jan. 2002（23.01.2002） description, page 2 lines 5-18,page 3 line 12 to page 4 line 12, Figs 2-3, 7	1-2，7，12
Y	CN1126336C (ZHONGXING COMMUNICATION CO LTD SHENZHEN) 29 Oct. 2003（29.10.2003） description, page 2 lines 2-17	1-2，7，12
Y	CN100417054C (HUAWEI TECHNOLOGIES CO LTD) 03 Sep. 2008（03.09.2008） description, page 4 line 16 to the last line of page 8, Figs 1-2	1-2，7，12
A	CN101022287A (HUXIN INTEGRATE CIRCUIT CO LTD) 22 Aug. 2007 (22.08.2007) The whole document	1-12
A	CN101083484A (MANSHAER CO LTD) 05 Dec. 2007 (05.12.2007) The whole document	1-12
A	CN101183881A (HUAWEI TECHNOLOGIES CO LTD) 21 May 2008 (21.05.2008) The whole document	1-12
A	CN1260902C (ZHONGXING COMMUNICATION CO LTD SHENZHEN) 21 Jun. 2006 (21.06.2006) The whole document	1-12

☐ Further documents are listed in the continuation of Box C. ☒ See patent family annex.

* Special categories of cited documents:

"A" document defining the general state of the art which is not considered to be of particular relevance

"E" earlier application or patent but published on or after the international filing date

"L" document which may throw doubts on priority claim (S) or which is cited to establish the publication date of another citation or other special reason (as specified)

"O" document referring to an oral disclosure, use, exhibition or other means

"P" document published prior to the international filing date but later than the priority date claimed

"T" later document published after the international filing date or priority date and not in conflict with the application but cited to understand the principle or theory underlying the invention

"X" document of particular relevance; the claimed invention cannot be considered novel or cannot be considered to involve an inventive step when the document is taken alone

"Y" document of particular relevance; the claimed invention cannot be considered to involve an inventive step when the document is combined with one or more other such documents, such combination being obvious to a person skilled in the art

"&"document member of the same patent family

Date of the actual completion of the international search	Date of mailing of the international search report
10 Sep. 2010（10.09.2010）	**23 Sep. 2010 (23.09.2010)**
Name and mailing address of the ISA/CN The State Intellectual Property Office, the P.R.China 6 Xitucheng Rd., Jimen Bridge, Haidian District, Beijing, China 100088 Facsimile No. 86-10-62019451	Authorized officer GAO，Shengkai Telephone No. (86-10)62411425

Form PCT/ISA /210 (second sheet) (July 2009)

INTERNATIONAL SEARCH REPORT
Information on patent family members

International application No.
PCT/CN2010/074103

Patent Documents referred in the Report	Publication Date	Patent Family	Publication Date
CN101616376A	30.12.2009	NONE	
CN1332544A	23.01.2002	CN1150711C	19.05.2004
CN1126336C	29.10.2003	CN1288316A	21.03.2001
CN100417054C	03.09.2008	CN1567774A	19.01.2005
CN101022287A	22.08.2007	WO2008122152A1	16.10.2008
		EP2157720A1	24.02.2010
		CN101257341A	03.09.2008
CN101083484A	05.12.2007	WO2008148277A1	11.12.2008
		EP2161845A1	10.03.2010
		US2010177805A1	15.07.2010
CN101183881A	21.05.2008	NONE	
CN1260902C	21.06.2006	CN1529442A	15.09.2004

Form PCT/ISA/210 (patent family annex) (July 2009)

国际检索报告	国际申请号 **PCT/CN2010/074103**

A. 主题的分类

H04B 1/707 (2006.01) i

按照国际专利分类(IPC)或者同时按照国家分类和 IPC 两种分类

B. 检索领域

检索的最低限度文献(标明分类系统和分类号)

IPC: H04B 1/-

包含在检索领域中的除最低限度文献以外的检索文献

在国际检索时查阅的电子数据库(数据库的名称，和使用的检索词（如使用）)

CPRSABS,CNKI: CDMA，码分多址，接收，时延，延时，延迟，多径，滤波,解扰，解扩，译码；WPI,EPODOC: CDMA, receive, delay, multi path, filter, descramble, despread, decode

C. 相关文件

类　型*	引用文件，必要时，指明相关段落	相关的权利要求
PX	CN101616376A (中兴通讯股份有限公司) 30. 12 月 2009 (30.12.2009) 全文	1-12
Y	CN1332544A (信息产业部电信传输研究所) 23. 1 月 2002（23.01.2002） 说明书第 2 页第 5-18 行，第 3 页第 12 至第 4 页第 12 行，附图 2-3，7	1-2，7，12
Y	CN1126336C (深圳中兴通讯股份有限公司) 29. 10 月 2003（29.10.2003） 说明书第 2 页第 2-17 行	1-2，7，12
Y	CN100417054C (华为技术有限公司) 03. 9 月 2008（03.09.2008） 说明书第 4 页第 16 行至第 8 页最后一行，附图 1-2	1-2，7，12
A	CN101022287A (互芯集成电路(北京)有限公司) 22. 8 月 2007 (22.08.2007) 全文	1-12
A	CN101083484A (曼沙尔有限公司) 05. 12 月 2007 (05.12.2007) 全文	1-12
A	CN101183881A (华为技术有限公司) 21. 5 月 2008 (21.05.2008) 全文	1-12
A	CN1260902C (中兴通讯股份有限公司) 21. 6 月 2006 (21.06.2006) 全文	1-12

☐ 其余文件在 C 栏的续页中列出。　　☒ 见同族专利附件。

* 引用文件的具体类型：

"A" 认为不特别相关的表示了现有技术一般状态的文件

"E" 在国际申请日的当天或之后公布的在先申请或专利

"L" 可能对优先权要求构成怀疑的文件，或为确定另一篇引用文件的公布日而引用的或者因其他特殊理由而引用的文件（如具体说明的）

"O" 涉及口头公开、使用、展览或其他方式公开的文件

"P" 公布日先于国际申请日但迟于所要求的优先权日的文件

"T" 在申请日或优先权日之后公布，与申请不相抵触，但为了理解发明之理论或原理的在后文件

"X" 特别相关的文件，单独考虑该文件，认定要求保护的发明不是新颖的或不具有创造性

"Y" 特别相关的文件，当该文件与另一篇或者多篇该类文件结合并且这种结合对于本领域技术人员为显而易见时，要求保护的发明不具有创造性

"&" 同族专利的文件

国际检索实际完成的日期 10. 9 月 2010（10.09.2010）	国际检索报告邮寄日期 **23.9 月 2010 (23.09.2010)**
ISA/CN 的名称和邮寄地址： 中华人民共和国国家知识产权局 中国北京市海淀区蓟门桥西土城路 6 号 100088 传真号：　(86-10)62019451	受权官员 高胜凯 电话号码：(86-10) **62411425**

PCT/ISA/210 表(第 2 页) (2009 年 7 月)

国际检索报告
关于同族专利的信息

国际申请号
PCT/CN2010/074103

检索报告中引用的专利文件	公布日期	同族专利	公布日期
CN101616376A	30.12.2009	无	
CN1332544A	23.01.2002	CN1150711C	19.05.2004
CN1126336C	29.10.2003	CN1288316A	21.03.2001
CN100417054C	03.09.2008	CN1567774A	19.01.2005
CN101022287A	22.08.2007	WO2008122152A1	16.10.2008
		EP2157720A1	24.02.2010
		CN101257341A	03.09.2008
CN101083484A	05.12.2007	WO2008148277A1	11.12.2008
		EP2161845A1	10.03.2010
		US2010177805A1	15.07.2010
CN101183881A	21.05.2008	无	
CN1260902C	21.06.2006	CN1529442A	15.09.2004

Espacenet

Bibliographic data: CN102138309 (A) — 2011-07-27

Method of dynamic control of the focusing of a signal pre-equalized by time reversal

Inventor(s):	THUY PHAN HUY DINH; JOE WIART; YOUMNI ZIADE; JEAN-PHILIPPE DESBAT ±	
Applicant(s):	FRANCE TELECOM ±	

Classification:	**- international:**	***H04L1/00; H04L25/02; H04L25/03***
	- European:	H04B17/00B1R; H04L1/00A9B; H04L25/02C1; H04L25/02C3; H04L25/02C7; H04L25/03B1A; H04L25/03B9; H04L5/14
Application number:	CN20098133604 20090626	
Priority number(s):	WO2009FR51237 20090626; FR20080054358 20080627	
Also published as:	WO2009156703 (A2) WO2009156703 (A3) US2011103457 (A1) FR2933252 (A1) ES2384151 (T3) more	

Abstract of CN102138309 (A)

A method of dynamic control of the focusing of a signal pre-equalized by time reversal of an estimated propagation channel between an original antenna (A1) of an original communicating entity (EC1) and a destination antenna (A2) of a destination communicating entity (EC2) at a current instant, comprises the steps of evaluation by the destination communicating entity of a relative quality of focusing (Q(n)) of the pre-equalized signal emitted by the original antenna and received by the destination antenna, with respect to a quality at a focal point (FO), and if the evaluated relative quality of focusing does not satisfy a predetermined criterion, of requesting, by the destination communicating entity, of modification of focusing to the original communicating entity for a following instant.

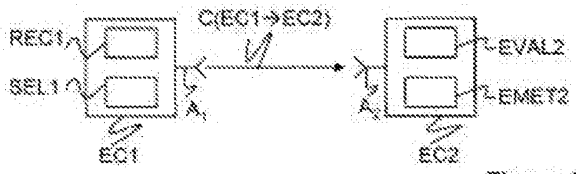

Figure 1

Last updated: 14.03.2012 Worldwide Database 5.7.38; 92p

(19)中华人民共和国国家知识产权局

(12)发明专利申请

(10)申请公布号 CN 102138309 A
(43)申请公布日 2011.07.27

(21)申请号 200980133604.0

(22)申请日 2009.06.26

(30)优先权数据
0854358 2008.06.27 FR

(85)PCT申请进入国家阶段日
2011.02.28

(86)PCT申请的申请数据
PCT/FR2009/051237 2009.06.26

(87)PCT申请的公布数据
WO2009/156703 FR 2009.12.30

(71)申请人 法国电信公司
地址 法国巴黎

(72)发明人 迪恩·T·法恩休伊 乔·威亚特
尤姆尼·齐亚德
让-菲利普·德斯巴特

(74)专利代理机构 北京市柳沈律师事务所 11105
代理人 张玉红

(51)Int.Cl.
H04L 25/02(2006.01)
H04L 25/03(2006.01)
H04L 1/00(2006.01)

权利要求书 2 页 说明书 15 页 附图 3 页

(54)发明名称

动态控制通过时间反转而预均衡的信号的会聚的方法

(57)摘要

一种用于在当前时刻动态控制由源通信实体(EC1)的源天线(A_1)与目的通信实体(EC2)的目的天线(A_2)之间的所估计的传播信道的时间反转而预均衡的信号的会聚的方法，所述方法包括以下步骤：由所述目的通信实体评估与在会聚点(FO)处的质量相比的由所述源天线发送并且由所述目的天线接收的预均衡信号的相对会聚质量(Q(n))，并且所评估的相对会聚质量是否不满足预定准则，由所述目的通信实体请求修改针对所述源通信实体的会聚点，以用于后续时刻。

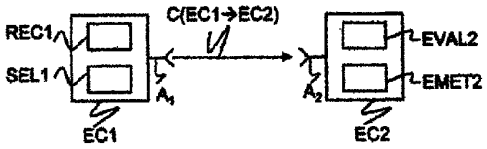

CN 102138309 A

1. 一种用于在当前时刻动态控制由源通信实体 (EC1) 的源天线 (A_1) 与目的通信实体 (EC2) 的目的天线 (A_2) 之间的所估计的传播信道的时间反转而预均衡的信号的会聚的方法，

所述方法其特征在于包括以下步骤：

- 由所述目的通信实体评估与在会聚点 (FO) 处的质量相比的由所述源天线发送并且由所述目的天线接收的预均衡信号的相对会聚质量 (Q(n))，并且所评估的相对会聚质量是否不满足预定准则，

- 由所述目的通信实体请求修改针对所述源通信实体的会聚点，以用于后续时刻。

2. 根据权利要求 1 所述的方法，其中，作为所述目的天线与所述会聚点之间的距离的函数，所述相对会聚质量 (Q(n)) 是根据接收功率曲线的归一化表示 (QUAL1，QUAL2) 而确定的，所述表示是距离的递减函数，并且在所述会聚点处具有最大值。

3. 根据权利要求 1 或 2 中的任一所述的方法，其中，所述修改请求步骤包括：

- 估计在所述当前时刻的所述目的天线与对应于目标相对会聚质量 (Q_{target}) 的位置 (P_{target}) 之间的距离 (L(n))，

- 发送包括所述距离的估计的针对所述源通信实体的修改请求。

4. 根据权利要求 1 或 2 中的任一所述的方法，其中，所述修改请求步骤包括：

- 估计在所述当前时刻评估的相对会聚质量值与目标相对会聚质量值 (Q_{target}) 之间的偏差 ($\Delta L(n)$)，

- 发送包括所述偏差的估计的针对所述源通信实体的修改请求。

5. 根据权利要求 1 或 2 中的任一所述的方法，其中，所述修改请求步骤包括：

- 估计在所述当前时刻的所述目的天线与对应于目标相对会聚质量 (Q_{target}) 的位置 (P_{target}) 之间的距离 (L(n))，

- 选择从载波频率和潜伏时延选取的至少一个参数的值，以用于下一时刻，

- 发送针对所述源通信实体的请求，包括对所述至少一个所选择的参数的值的参考。

6. 根据权利要求 1 或 2 中的任一所述的方法，其中，所述修改请求步骤包括：

- 在所述相对会聚质量的估计与目标相对会聚质量 (Q_{target}) 之间进行比较，

- 确定变化指数 $IND_{var}(n)$ 作为所述比较的结果的函数，

- 发送包括所述变化指数的针对所述源通信实体的修改请求。

7. 如权利要求 1 至 6 中的任一所述的方法，其中，在接收所述修改请求时，所述源通信实体修改从载波频率和潜伏时延选取的至少一个参数的值，以用于下一时刻。

8. 一种用于目的通信实体 (EC2)、用于在当前时刻动态控制由源通信实体 EC1 的源天线 (A_1) 与目的通信实体 (EC2) 的目的天线 (A_2) 之间的所估计的传播信道的时间反转而预均衡的信号的会聚的设备，

所述设备其特征在于它包括：

- 用于评估相对于在会聚点 (FO) 处的质量的由所述源天线发送并且由所述目的天线接收的预均衡信号的相对会聚质量 (Q(n)) 的装置 (EVAL2)，

- 用于请求针对所述源通信实体以用于后续时刻的会聚修改的装置 (EMET2)。

9. 一种用于源通信实体 (EC1)、用于在当前时刻动态控制由源通信实体 (EC1) 的源天线 (A_1) 与目的通信实体 (EC2) 的目的天线 (A_2) 之间的所估计的传播信道的时间反转而预

均衡的信号的会聚的设备，

所述设备其特征在于它包括：

-用于接收由所述目的通信实体发送的会聚修改请求的装置(REC1)，

-用于修改从载波频率和潜伏时延选取的至少一个参数的值的装置(SEL1)。

10. 一种无线电通信系统的通信实体，其包括如权利要求8或9中所述的各设备中的至少一个。

11. 一种无线电通信系统，其包括如权利要求10中所述的至少一个通信实体。

12. 一种用于目的通信实体的计算机程序，包括用于控制当所述程序由所述目的通信实体运行时由所述实体实现如权利要求1至7中的任一所述的方法的这些步骤的软件指令。

13. 一种用于源通信实体的计算机程序，包括用于控制当所述程序由所述源通信实体运行时由所述实体实现如权利要求1至7中的任一所述的方法的这些步骤的软件指令。

动态控制通过时间反转而预均衡的信号的会聚的方法

技术领域

[0001] 本发明的领域是电信领域，更具体地说，在各通信实体之间的无线电通信技术领域。更具体地说，本发明涉及在两个通信实体之间基于时间反转技术的信号的传输质量。

背景技术

[0002] 通信实体的天线所发送的无线电信号根据源点（定义在源天线的输出处）与目的点（定义在目的通信实体的天线的输入处）之间的传播条件而经历变形。为了限制这些变形，首先通过根据在这两根天线之间的传播信道的特性而应用预均衡系数来使得信号失真。因此，必须表征这种传播信道。

[0003] 在现有各种预均衡方法当中，基于时间反转的方法因它们的减少的复杂性、它们的性能以及它们的用于在接收天线上会聚无线电波的固有能力而出类拔萃。通过在时间和空间上会聚接收到的信号的能量，时间反转使得有可能明显减少传播信道的时间散射(time scattering)。

[0004] 时间反转是一种波会聚技术，典型地用于声波，其依赖于波动方程的时间反转的不变性。因而，时间上反转的波在时间上像回去的直达波那样得以传播。从源点发送的简短脉冲在传播介质中传播。目的点所接收到的该波的一部分受时间反转，之后在传播介质中返回。波朝向源点会聚，在所述源点处重塑简短脉冲，并且波的能量会聚在源点上。在源点上通过时间反转而会聚的信号在其形式上几乎与在源点处发送的初始信号相同。因而在源点处存在时间再压缩。具体地说，当传播介质复杂时，返回的波全都更加精确地收敛。

[0005] 时间反转技术因而应用于无线电通信网络，以显著地通过减少信道的扩展来消除传播信道对信号的效应，并且简化在通过信道之后接收到的码元的处理。通过应用根据源通信实体的天线所发送的信号必须通过的传播信道的冲击响应的时间反转而获得的系数，该信号因此被预均衡。应用于信号的传播信道的时间反转使得有可能消除在来自源点的适时预失真的信号的传输期间该信道的影响，并且将信号会聚在目的天线上。实现时间反转因而需要源通信实体对传播信道的知识。

[0006] 然而，当通信实体在移动时，因为通信实体的移动性，所以由通信实体在给定时刻进行的信道估计可能在后续时刻证明出错。这种错误关于定义为从目的通信实体观测到的源通信实体的位移速度的函数的相对运动而受限。对于明显相对运动，在对于信号的预失真而应用的传播信道的估计与信号实际经历的传播信道之间存在去相关性。

[0007] 因而，一方面，信号的预失真是不足的，而另一方面，信号在目的天线上的会聚并未得以实现。时间反转的预均衡技术因此对于正快速移动的通信实体给出不良性能。

[0008] 信号的发散实际上是因为相对运动而且还有潜伏时延而导致的。潜伏时延是总体时延，其包括测量传播信道与发送所会聚的信号之间的处理时延、以及发送与接收所会聚的信号之间的传播时延。

[0009] 相对于应用于预均衡信号的传播信道的估计的目的天线的位置定义会聚点。会聚点因而对应于在潜伏时延已经逝去之前目的天线相对于源天线的位置。换句话说，会聚点

与用于静态通信实体的并且在缺少潜伏时延的情况下的波的收敛点对应。于在潜伏时延期间一个或两个通信实体的位移的情况下，目的天线相对于源天线处于与会聚点的位置不同的位置，因此会聚点未被观测。

[0010] 当未实现信号的会聚时，服务质量降级。服务质量是例如所提供的比特率、或另外关于信号所传达的数据的误码率。因而，目的通信实体和／或源通信实体一运动，服务质量就降级。当源通信实体相对于目的通信实体的相对运动增加时，这种降级性增加，这种移动出现在潜伏时间期间。换句话说，当在潜伏时间期间相对运动增加时，在目的天线上接收的功率减少。此外，这种降级性是预均衡信号的载波频率的函数。

[0011] 因此，源通信实体必须采用与信号的会聚有关的传输参数，显著地作为通信实体的相对运动的函数，以确保服务质量，所述服务质量可以是例如所提供的比特率、或另外关于所传达的数据的误码率。传输参数是例如所发送的信号的载波频率或潜伏时延。通信实体也可以选取为：在一个且同一无线电通信系统内，改变带宽，并且因此改变载波频率，或者另外切换到在分离带宽中操作的分离无线电通信系统。

[0012] 因此，需要一种方法，用于动态控制通过时间反转而预均衡的信号的会聚，以适用通过时间反转而预均衡的信号的传输参数。

发明内容

[0013] 本发明适合于具有至少一根发送天线和至少一根接收天线的通信实体。通信实体可以是移动终端、无线电接入点、地面或卫星基站、或装配有通信卡的任何设施。

[0014] 这种解决方案也适合于具有多根发送天线和／或多根接收天线的通信实体，例如MIMO（多入多出）、SIMO（单入多出）或MISO（多入单出）类型的无线电通信系统。

[0015] 为了实现该目的，本发明提出一种方法，用于在当前时刻动态控制由源通信实体的源天线与目的通信实体的目的天线之间的所估计的传播信道的时间反转而预均衡的信号的会聚。所述方法包括以下步骤：

[0016] －由所述目的通信实体评估与在会聚点处的质量相比的由所述源天线发送并且由所述目的天线接收的预均衡信号的相对会聚质量，并且所评估的相对会聚质量是否不满足预定准则，

[0017] －由所述目的通信实体请求修改针对所述源通信实体的会聚点，以用于后续时刻。

[0018] 该方法因而使得有可能根据所述目的通信实体所传递的相对会聚质量指示来动态改动通过时间反转而预均衡的信号的传输参数。服务质量因而由从目的通信实体所接收到的信号确定的相对会聚质量来表示。相对会聚质量的估计（其利用通过时间反转的预均衡的技术的空时特性）允许对传输参数的适当的修改的简单快速评估。该方法因而使得有可能动态调整传输参数，显著地作为各通信实体之一或二者的位移的函数。

[0019] 注意，作为目的天线与会聚点之间的距离的函数，相对会聚质量是根据接收功率曲线的归一化表示确定的，该表示是距离的递减函数，并且在会聚点具有最大值。

[0020] 会聚质量因而是相对于将在会聚点实现的最大质量而非取决于载波频率的绝对质量而表示的。会聚点对应于在潜伏时延已经逝去之前目的天线相对于源天线的位置。接收功率曲线的归一化表示使得有可能对于不同传输参数而进行性能比较，并且因而选择用于下一时刻的更偏好的配置，以获得目标服务质量。

[0021] 所述修改请求步骤包括：

[0022] －估计在当前时刻的目的天线与和目标相对会聚质量对应的位置之间的距离，

[0023] －发送包括所述距离的估计的针对所述源通信实体的修改请求。

[0024] 因而，所述目的通信实体简单地评估目的天线和与目标相对会聚质量对应的位置之间的距离偏差，而不对信号使用复杂处理（这将导致额外的处理时间）。该简单偏差数据于是使得源通信实体能够调整传输参数，并且从而减少或者消除这种偏差。

[0025] 所述修改请求步骤也可以包括：

[0026] －估计在所述当前时刻评估的相对会聚质量值与目标相对会聚质量值之间的偏差，

[0027] －发送包括所述偏差的估计的针对所述源通信实体的修改请求。

[0028] 因而，目的通信实体的复杂度受限于计算相对会聚质量，并且受限于与目标相对会聚质量有关的偏差。该简单偏差数据于是使得源通信实体能够调整传输参数，并且从而减少或者消除这种偏差。

[0029] 所述修改请求步骤也可以包括：

[0030] －估计在当前时刻的目的天线和与目标相对会聚质量对应的位置之间的距离，

[0031] －选择从载波频率和潜伏时延选取的至少一个参数的值，以用于下一时刻，

[0032] －发送针对所述源通信实体的请求，包括对所述至少一个所选择的参数的值的参考。

[0033] 因而，所述目的通信实体简单地评估所述目的天线和与目标相对会聚质量对应的位置之间的偏差。于是可以选择使得能够实现所述目标相对会聚质量或者朝向所述目标相对会聚质量而收敛的传输参数，并且将其选择发送到所述源通信实体。所述源通信实体于是可以要么根据接收到的请求来修改所述参数，要么在修改所述参数之前改变选择。

[0034] 可以由各通信实体中的一个或多个进行所述选择，使得有可能例如分配更高的频率载波频率，以用于快速位移速度。所述选择也可以包括与例如载波频率的占用有关的约束，其使得有可能根据所述通信实体的相对运动而优化载波频率的分配。所述选择也可以观测需要减少的潜伏时延的实时服务约束。所述选择也可以考虑无线电传输系统的改变。

[0035] 所述修改请求步骤也可以包括：

[0036] －在所述相对会聚质量的估计与目标相对会聚质量之间进行比较，

[0037] －确定变化指数作为所述比较的结果的函数，

[0038] －发送包括所述变化指数的针对所述源通信实体的修改请求。

[0039] 因而，通信实体的复杂度受限于相对会聚质量的计算，并且受限于与目标相对会聚质量有关的比较。取决于所获得的比较结果，所述目的通信实体简单地请求朝向所述会聚点的收敛或者远距所述会聚点。该简单比较结果数据于是使得所述源通信实体能够调整传输参数，以在连续迭代期间从会聚点一步一步地朝向自身收敛或者离开自身。

[0040] 一旦接收所述修改请求，所述源通信实体修改从载波频率和潜伏时延选取的至少一个参数的值，以用于下一时刻，

[0041] 所述源通信实体修改例如所述载波频率和／或所述潜伏时延，以用于下一迭代。这种修改是在由所述源通信实体进行传输参数的选择之后或者另外在由所述目的通信实体进行选择之后进行的。

[0042] 本发明还涉及一种用于目的通信实体的设备，用于在当前时刻动态控制通过源通信实体的源天线与目的通信实体的目的天线之间的所估计的传播信道的时间反转而预均衡的信号的会聚。所述设备包括：

[0043] －用于评估相对于在会聚点处的质量的由所述源天线发送并且由所述目的天线接收的预均衡信号的相对会聚质量的装置，

[0044] －用于请求针对所述源通信实体以用于后续时刻的会聚修改的装置。

[0045] 本发明还涉及一种用于源通信实体的设备，用于在当前时刻动态控制通过源通信实体的源天线与目的通信实体的目的天线之间的所估计的传播信道的时间反转而预均衡的信号的会聚。所述设备包括：

[0046] －用于接收由所述目的通信实体发送的会聚修改请求的装置，

[0047] －用于修改从载波频率和潜伏时延选取的至少一个参数的值的装置。

[0048] 本发明还涉及一种无线电通信系统的通信实体，其包括根据本发明的用于动态控制会聚的所述各设备中的至少一个。

[0049] 本发明还涉及一种无线电通信系统，其包括根据本发明的至少一个通信实体。

[0050] 所述设备、所述通信实体和所述系统提供与前述设备、通信实体和系统相似的优点。

附图说明

[0051] 本发明的其它特征和优点将据阅读本发明特定实施例以及给定为简单说明性非限定性示例的关联通信实体还有附图的以下描述而变得更加清除易懂，其中：

[0052] －图 1 是根据本发明的源通信实体与目的通信实体进行通信的示意性框图，

[0053] －图 2 表示作为目的天线与会聚点之间的距离的函数的接收功率曲线的示例，

[0054] －图 3 表示作为目的天线与会聚点之间的距离的函数的接收功率曲线的归一化表示的示例，

[0055] －图 4 表示根据第一实施例的用于动态控制通过时间反转而预均衡的信号的会聚的方法的步骤，

[0056] －图 5 表示根据第二实施例的用于动态控制通过时间反转而预均衡的信号的会聚的方法的步骤，

[0057] －图 6 表示根据第三实施例的用于动态控制通过时间反转而预均衡的信号的会聚的方法的步骤，

[0058] －图 7 表示根据第四实施例的用于动态控制通过时间反转而预均衡的信号的会聚的方法的步骤。

具体实施方式

[0059] 参照图 1，通信实体 EC1 能够通过无线电通信网络（图中未示出）与目的实体 EC2 进行通信。

[0060] 例如，所述无线电通信网络是 3GPP（第三代合作伙伴项目）规范组织所定义的 UMTS（全球移动通信系统）类型的蜂窝无线电通信网络，并且其开发包括 3GPP-LTE（长期演进）或 WIMAX（全球互通微波存取）类型的无线电通信网络。

[0061] 所述通信实体可以是移动终端、地面或卫星基站、接入点、或装配有通信卡的任何设施。

[0062] 为了简明，对于从通信实体 EC1 到通信实体 EC2 的数据信号的单向传输而描述本发明。本发明还涉及双向传输，并且还涉及包括多根发送天线或接收天线的通信实体。

[0063] 源通信实体 EC1 能够将数据信号从天线 A_1 发射到目的通信实体 EC2。

[0064] 目的通信实体 EC2 被布置为接收数据信号，并且从在天线 A_2 上接收到的信号恢复数据。

[0065] 通过应用时间反转后的估计冲击响应的系数来对数据信号进行预先滤波。冲击响应表示源通信实体 A_1 的天线（称为源天线）与目的通信实体 A_2 的天线（称为目的天线）之间的传播信道 C(E1 → E2)。

[0066] 于在 TDD 模式下传输的情况下，在不同时刻对于一个且同一载波频率执行第一方向（例如从源通信实体到目的通信实体）上的传输以及第二方向（所述第一方向的反方向）上的传输。传统上，由源通信实体基于在第二方向上的传输信号的分析来完成传播信道的冲击响应的估计。

[0067] 于在 FDD 模式下传输的情况下，第一方向上的传输和相反方向上的传输是在分离的频带中进行的。可以例如通过传送目的通信实体所进行的传播信道的估计来获得源通信实体对于与第一发送方向对应的传播信道的知识。

[0068] 根据所关注的传输模式，源通信实体或目的通信实体因而布置为执行传播信道的估计。如果该估计是由目的通信实体进行的，则目的通信实体能够将估计传送到源通信实体，或者传送通过估计的时间反转而获得的预均衡系数。

[0069] 图 1 仅示出包括于涉及本发明的源通信实体 EC1 和目的通信实体 EC2 中的这些装置。

[0070] 源通信实体 EC1 和目的通信实体 EC2 还包括中央控制单元（未示出），所包括的装置链接至所述中央控制单元，并且所述中央控制单元目的是控制这些装置的操作。

[0071] 所述源通信实体包括：

[0072] - 接收机 REC1，布置为：接收目的通信实体所发送的会聚修改请求，

[0073] - 选择器 SEL1，布置为：修改用于数据信号的传输的载波频率和 / 或潜伏时延。潜伏时延定义为：将传播信道的冲击响应的估计与该估计的通过时间反转而预均衡的信号的接收分离的可配置时间间隔。

[0074] 目的通信实体包括：

[0075] - 评估器 EVAL2，布置为：相对于会聚点处的质量，根据目的天线所接收到的信号评估相对会聚质量，

[0076] - 发射机 EMET2，布置为：请求针对源通信实体的会聚修改。

[0077] 通过描述用于控制通过时间反转而预均衡的信号的会聚的方法而在下文中详述上文中介绍的各装置的操作。

[0078] 具体地说，参照图 2 和图 3 描述评估器 EVAL2，其用于根据目的通信实体 EC2 所接收到的信号来评估相对会聚质量。

[0079] 评估器 EVAL2 评估接收功率曲线的归一化表示的，目的天线 A_2 上接收到的信号相对于会聚点的质量值的相对会聚质量。还结合图 2 和图 3 描述作为目的天线与会聚点之间

的距离的函数的接收功率曲线的归一化表示。

[0080] 目的天线 A_2 上接收到的预均衡信号的功率确定信号的质量，并且因而确定服务质量，所述服务质量可以是例如所提供的比特率或是另外关于数据的误码率。在没有源通信实体 EC1 相对于目的通信实体 EC2 的相对运动 v 的情况下，并且在没有任何潜伏时延 D_L 的情况下，通过时间反转而预均衡的信号的功率在波收敛点（称为会聚点，其位于目的天线处）是最大的。潜伏时延 D_L 应理解为将传播信道的冲击响应的估计与该估计的通过时间反转而预均衡的信号的接收分离的可配置时间间隔。会聚点因而对应于在潜伏时延已经逝去之前目的天线相对于源天线的位置。

[0081] 一旦通信实体在潜伏时间期间运动，就不再观测到会聚点。这种犯规(transgression)表示为潜伏时延 D_L 以及源通信实体相对于目的通信实体的相对运动 v 的函数。目的天线与会聚点之间的距离因而由相对运动 v（例如以速度的形式）与潜伏时间的乘积而给出：

[0082] $L = v.D_L$。

[0083] 相对运动 v 下文中应理解为是从目的通信实体看见的源通信实体的位移。

[0084] 当目的天线远距于会聚点时（例如对于不适当的潜伏时延），或者在一个或两个通信实体的位移期间，功率不再是最大的。图 2 因而表示作为目的天线与会聚点之间的距离的函数的接收功率曲线的两个示例性表示。与在载波频率 f_1 上发送的预均衡信号的传输对应的函数 focal_1 在会聚点 F0 处最大，并且作为对会聚点的距离 L 的函数而单调减少。

[0085] 对于在距会聚点距离 L 处的目的天线的位置 P_{A2}，接收功率 P_1 小于在会聚点处的接收功率 $P_{F0.1}$。

[0086] 接收功率曲线的范围和形式取决于传播信道，并且显著取决于信号的载波频率。当载波频率下降时，接收功率曲线的表示扩展。因而，与低于载波频率 f_2 的频率 f_1 对应的函数 focal_1 具有比函数 focal_2 更大的范围。

[0087] 以上特性例如展示于题为" Signal Frequency and Bandwidth Effects on the Performance of UWB Time-Reversal Technique" 的文章中，其作者是A.Khaleghi和G.El Klein，提交于 2007 年的" Loughborough Antennas and Propagation Conference"，第 97 到 100 页。

[0088] 在通常情况下，会聚质量的鉴定可以取决于接收功率曲线的表示。这种表示将质量的变化表达为对会聚点的距离的函数，并且取决于信号的载波频率。所述表示如下：

[0089] -其最大值是在会聚点达到的，

[0090] -其作为目的天线与会聚点之间的距离的函数而单调递减。

[0091] 还有可能考虑对于所有载波频率最大值相同的所谓的接收功率曲线的归一化表示。归一化表示是对会聚点的距离的单调递减函数，从而对于目的天线与会聚点之间的给定距离，如果 Q_1 和 Q_2 是对于各个载波频率 f_1 和 f_2(f_1 小于 f_2) 的两个相对会聚质量值，则 Q_1 大于 Q_2。因而，对于在距会聚点的距离 L 处的目的天线的位置 P_{A2}，与载波频率 f_1 的预均衡信号的传输对应的相对会聚质量值 Q_1 大于与载波频率 f_2 的预均衡信号的传输对应的相对会聚质量值 Q_2。

[0092] 图 3 示出接收功率曲线的归一化表示，曲线 $QUAL_1$ 对应于在频率 f_1 发送的预均衡信号的传输，曲线 $QUAL_2$ 对应于在频率 f_2 上发送的预均衡信号的传输，从而频率 f_1 小于频

率 f_2。

[0093] 在目的天线上接收到的信号的相对会聚质量因而根据信号的载波频率结合归一化表示的值而得以评估。

[0094] 通过归一化表示满足上述特性的以下示例来以非限定性的方式示出相对会聚质量评估。

[0095] 因而，相对会聚质量是由评估器 EVAL2 据相对运动 v 的测量以确定目的天线与会聚点的距离 L 而评估的。该距离 L 因而是由潜伏时延 D_L 和相对运动 v（例如以速度的形式）的估计的乘积而确定的，如下：

[0096] $L = v.D_L$。

[0097] 相对会聚质量 Q_v 于是根据源天线所发送的预均衡信号的载波频率 f_p 的波长 λ 而得以表达，其中，$\lambda = c/f_p$，c 表示光速，从而：

[0098] $$Q_v = \frac{(\lambda/2)-L}{(\lambda/2)}$$

[0099] 也可以根据通过 0 阶贝塞尔函数对接收功率曲线进行建模而评估相对会聚质量 Q_{Bessel}，如下：

[0100] $$Q_{Bessel}=Bessel(\frac{L}{\lambda})$$

[0101] 也可以根据接收到的信号的时间对称性的估计来评估相对会聚质量。为此，对于分配给目的实体的带宽 B_{EC} 的任何载波频率 f_k，评估器 EVAL2 评估所谓的信号对称性指数参数，由以下给出：

[0102] $$IND_k = \frac{Re_k^{\,2}}{(Re_k + Im_k)^2},$$

[0103] 其中，Re_k 和 Im_k 分别是接收到的数据信号 s(t) 的频率表示 $S(f_K)$ 的实部和虚部。相对会聚质量 Q_{sym} 因而给出如下：

[0104] $$Q_{sym} = \frac{\sum_{k=1}^{N_f} IND_k}{N_f},$$

[0105] 其中，N_f 指定频带 B_{EC} 中分配给目的通信实体 EC2 的载波频率的数量。

[0106] 也可以根据接收到的信号的时间和功率对称性的估计而评估相对会聚质量。目的通信实体 EC2 的评估器 EVAL2 确定接收到的信号的 N 个时间对称性值 $Sym_t(n)$，用于相对于在与最高值采样 $s(t_{max})$ 对应的时刻 t_{max} 接收到的信号的采样的不同的时间偏差：

[0107] $$Sym_t(n) = \frac{\left| s(t_{max} + t_{n+max}) - s(t_{max} - t_{n+max}) \right| / \sqrt{E}}{\left(t_{n+max} - t_{max} \right) / \tau}$$

[0108] 其中，E 是接收到的信号的能量，并且 τ 是接收到的信号的估计时间扩展因子，n 从 1 至 N 变化。

[0109] 对称性值的数量 N 是目的通信实体的可配置参数，对于相对会聚质量的评估的精度随 N 而增加。

[0110] 此外，目的通信实体的评估器 EVAL2 确定接收到的信号的功率的 N 个对称性值 $Sym_P(n)$，用于在时刻 t_{max} 相对于信号的采样的不同时间偏差，如下：

[0111]
$$Sym_p(n)=\frac{\left[\sqrt{\left|s(t_{max}+t_{n+max})\right|^2+\left|s(t_{n\,max}-t_{n+max})\right|^2}\right]/\sqrt{E}}{2\left(t_{n+max}-t_{max}\right)/\tau}$$

[0112] 相对会聚质量 Q_{symp} 因而给出如下：

[0113]
$$Q_{symp}=\frac{1}{N}\sum_{n=1}^{N}\frac{(\pi^2/4)-\left[\mathrm{atan}(Sym_t(n)).\mathrm{atan}(Sym_p(n))\right]}{\pi^2/4},$$

[0114] 其中，atan 指定反正切运算符。

[0115] 也可以根据接收到的信号的时间扩展因子相对于参照会聚点的信号的时间扩展的估计而评估相对会聚质量。信号的时间扩展因子也一般在文献中指代为术语“时延扩展”。为此，源通信实体 EC1 将脉冲发送到目的通信实体 EC2。后者因而接收在源天线与目的天线之间的传播信道的冲击响应 $h_c(t)$。目的通信实体的评估器 EVAL2 根据接收到的脉冲来构建基准信号 ref(t)，所述接收到的脉冲被应用了用于对信号进行预均衡的传播信道的冲击响应 $h_{rt}(t)$ 的估计的时间反转。在频域中，基准信号因而给出如下：

[0116] $REF(f)=H_{rt}(f)^*H_c(f)$.

[0117] 相对会聚质量 Q_{DS} 于是由基准信号的时间扩展因子 DS_{ref} 与数据信号的扩展因子 DS_{sig} 之间的比率给出：

[0118]
$$Q_{DS}=\frac{DS_{ref}}{DS_{sig}}.$$

[0119] 也可以根据接收到的信号的功率与基准信号的功率之间的比率而评估相对会聚质量。该功率比率表示传播信道的自相关的估计。

[0120] 为此，源通信实体将脉冲或导频信号发送到目的通信实体。目的通信实体 EC2 的评估器 EVAL2 估计源通信实体与目的通信实体之间的传播信道的冲击响应 $h_c(t)$，或者以等同方式，估计传播信道的传递函数 $H_c(f)$。

[0121] 评估器 EVAL2 确定传播信道的功率。例如，传播信道的功率 P_c 是根据本领域技术人员公知的任何功率评估方法相对于信号的带宽 B 和带宽的大小 W(B) 而评估的：

[0122]
$$P_c=\frac{1}{W(B)}\int_{f\in B}\left\|H_c(f)^*\times H_c(f)\right\|^2$$

[0123] 评估器 EVAL2 还确定等效信道的功率 P_{eq}。等效信道是通过与用于对信号进行会聚的冲击响应对应的传播信道的传递函数 $H_{rt}(f)$ 的共轭与传递函数 $H_c(f)$ 的乘积而获得的。

[0124] $H_{eq}(f)=H_{rt}(f)*H_c(f)$

[0125] 相对会聚质量 Q_{EQ} 于是由功率比率给出如下：

[0126] $$Q_{EQ} = \frac{\left\|P_{eq}\right\|^2}{\left\|P_c\right\|^2}.$$

[0127] 也可以通过组合先前所描述的不同评估来获得相对会聚质量的评估。因而，考虑到根据相对运动和波长、根据相对运动和贝塞尔函数、根据接收到的信号的时间对称性的估计、根据时间和功率对称性的估计、根据时间扩展因子、以及根据信道的自相关而分别定义的评估 Q_v、Q_{Bessel}、Q_{sym}、Q_{symp}、Q_{DS}、Q_{EQ}，通过应用评估 Q_v、Q_{Bessel}、Q_{sym}、Q_{symp}、Q_{DS} 和 Q_{EQ} 的单调递增组合来获得相对会聚质量。

[0128] 现参照图 4 描述用于动态控制通过源天线 A_1 和目的天线 A_2 之间的传播信道的估计的时间反转而预均衡的信号的会聚的方法的第一实施例。

[0129] 该方法是根据可配置迭代频率 F_{iter} 而反复迭代的。在从源通信实体 EC1 到目的通信实体 EC2 的数据传输时间期间，可以例如根据获得有效信道估计的频率来确定迭代频率。迭代是由具有指数 n 的迭代步骤 IT 以符号来表示的。基本初始化步骤 INIT 对应于指数 $n = 1$。

[0130] 在初始化步骤 INIT 期间，源通信实体选择载波频率 $f_p(1)$ 和潜伏时延 $D_L(1)$，以用于由时间反转预均衡的数据信号的传输。与该方法的第 n 迭代对应的载波频率和潜伏时延分别表示为 $f_p(n)$ 和 $D_L(n)$。

[0131] 在步骤 E1-1 中，源通信实体确定待应用于数据信号的预均衡系数。通过源天线 A_1 与目的天线 A_2 之间的传播信道 $C_n(EC1 \rightarrow EC2)$ 的估计出的冲击响应 $h_{rt,n}(t)$ 的时间反转来获得在当前时刻发送的应用于数据或基准信号的预均衡系数。

[0132] 可以例如通过以下操作来进行该确定：由源通信实体发送脉冲或导频信号，接着由源通信实体或目的通信实体分别根据 FDD 传输模式或 TDD 传输模式分别估计传播信道。在目的实体进行估计的情况下，目的实体将估计传递到源通信实体。

[0133] 在步骤 E1-2 中，源通信实体从源天线 A_1 发送在通过在步骤 E1-1 期间确定的预均衡系数进行预先滤波之后所获得的预均衡数据信号 $s_n(t)$。

[0134] 在步骤 E1-3 中，目的通信实体的评估器 EVAL2 例如依据先前描述的各方法之一根据接收到的信号来评估相对会聚质量 Q(n)。

[0135] 在步骤 E1-4 中，按照相对会聚质量 Q(n)，目的通信实体 EC2 确定是否需要关于会聚修改而询问源通信实体 EC1。所应用的一个准则可以例如并且以非限定性方式对应于相对会聚质量 Q(n) 与目标相对会聚质量 Q_{target} 的比较。如果相对会聚质量与目标相对会聚质量之间的偏差小于可配置阈值，则目的通信实体不请求任何会聚修改。

[0136] 如果不需要请求会聚修改，则不执行迭代 E1-5 至 E1-10。

[0137] 在变形方式中，目的通信实体不应用任何准则，并且迭代 E1-5 以及后续迭代得以有系统地执行。

[0138] 在步骤 E1-5 中，目的通信实体在当前时刻估计目的天线与会聚点之间的距离 L(n)。该会聚点对应于在潜伏时延已经逝去之前在第 n 迭代上目的天线相对于源天线的的位置。

[0139] 可以例如从读取相对会聚质量表来进行距离 L(n) 的估计。可配置质量表包含用

于目的天线的各个位置的测量点。可以通过在由目的通信实体进行的学习时段期间进行的相对会聚质量评估或仿真来预先进行这些测量。

[0140] 在如上所述根据 0 阶贝塞尔函数评估相对会聚质量的情况下，也可以基于贝塞尔函数来执行距离的评估，如下：

[0141] $\mathrm{Bessel}(L(n)) = Q(n)$.

[0142] 在步骤 E1-6 中，目的通信实体估计目的天线与对应于目标相对会聚质量 Q_{target} 的位置 P_{target} 之间的距离 $\Delta L(n)$。

[0143] 距离 $\Delta L(n)$ 的估计可以例如从读取先前所描述的相对质量表而进行，使得有可能评估位置 P_{target} 与会聚点之间的目标距离 L_{target}。于是根据 $L(n)$ 与 L_{target} 之间的差获得距离 $\Delta L(n)$。

[0144] 在如上所述根据 0 阶贝塞尔函数的相对会聚质量的评估的情况下，也可以据贝塞尔函数进行目标距离 L_{target} 的评估，从而：

[0145] $\mathrm{Bessel}(L_{target}) = Q_{target}$

[0146] 在变形中，也可以据目的通信实体中存储的值 L_{target} 进行距离 $\Delta L(n)$ 的估计。

[0147] 在步骤 E1-7 中，目的通信实体的发射机 EMET2 将会聚修改请求发送到源通信实体。

[0148] 该请求对应于包含在步骤 E1-6 期间确定的距离 $\Delta L(n)$ 的估计的请求的传输。

[0149] 在步骤 E1-8 中，源通信实体的接收机 REC1 接收会聚修改请求，并且提取该请求中所包含的距离 $\Delta L(n)$ 的估计。

[0150] 在步骤 E1-9 中，源通信实体选择从载波频率和潜伏时延选取的至少一个参数的值。

[0151] 该选择是基于图 3 所示的接收功率曲线的归一化表示的特性而进行的，其如下：

[0152] - 一方面，其作为距离对会聚点的函数并且因此作为相对运动 v 与潜伏时延 D_L 的乘积的函数是减少的，

[0153] - 并且另一方面，其为如此：对于目的天线与会聚点之间的给定距离 $L(n)$，如果 Q_1 和 Q_2 是各个载波频率 f_1 和 f_2（f_1 小于 f_2）的两个相对会聚质量值，则 Q_1 大于 Q_2。

[0154] 源通信实体可以因而选择新的载波频率，或者选择新的潜伏时延，或者甚至选择载波频率和潜伏时延二者，以兑现会聚修改请求。因而通过比较不同载波频率的接收功率曲线的不同归一化表示来进行选择。这些归一化接收功率曲线表示例如以质量表的形式预先存储于源通信实体中。

[0155] 可以通过从一个且同一频带而且还有分离频带选取载波频率或者甚至通过选取另一无线电通信系统而进行选择。

[0156] 在步骤 E1-10 中，源通信实体的选择器 SEL1 修改在步骤 E1-9 期间选择的传输参数。于是以这一对新的参数 $f_p(n+1)$、$D_L(n+1)$ 而反复迭代该方法的各步骤。

[0157] 可以在由源通信实体进行通知之后由目的通信实体或者另外由本领域技术人员公知的盲类型时间和频率同步方法来考虑这些新的参数。

[0158] 现参照图 5 描述用于动态控制通过源通信实体 EC1 与目的通信实体 EC2 之间的时间反转而预均衡的信号的会聚的方法的第二实施例。

[0159] 该方法是根据可配置迭代频率 F_{iter} 而反复迭代的。在从源通信实体到目的通信实

体的数据传输时间期间，可以例如将迭代频率确定为获得有效信道估计的频率函数。迭代是由具有指数 n 的迭代步骤 IT 以符号来表示的。基本初始化步骤 INIT 对应于指数 $n = 1$。

[0160] 在初始化步骤 INIT 期间，源通信实体选择载波频率 $f_p(1)$ 和潜伏时延 $D_L(1)$，以用于由时间反转预均衡的数据信号的传输。与该方法的第 n 迭代对应的载波频率和潜伏时延分别表示为 $f_p(n)$ 和 $D_L(n)$。

[0161] 在步骤 E2-1 中，源通信实体确定待应用于数据信号的预均衡系数。通过源天线 A_1 与目的天线 A_2 之间的传播信道 $C_n(EC1 \rightarrow EC2)$ 的估计出的冲击响应 $h_{rt,n}(t)$ 的时间反转来给出在当前时刻发送的应用于数据或基准信号的预均衡系数。

[0162] 可以例如通过以下操作来进行该确定：由源通信实体发送脉冲或导频信号，接着由源通信实体或目的通信实体分别根据 FDD 传输模式或 TDD 传输模式分别估计传播信道。在目的实体进行估计的情况下，目的实体将估计传递到源通信实体。

[0163] 在步骤 E2-2 中，源通信实体从源天线 A_1 发送在通过在步骤 E2-1 期间确定的预均衡系数进行预先滤波之后所获得的预均衡数据信号 $s_n(t)$。

[0164] 在步骤 E2-3 中，目的通信实体的评估器 EVAL2 例如依据先前描述的各方法之一根据接收到的信号来评估相对会聚质量 Q(n)。

[0165] 在步骤 E2-4 中，按照相对会聚质量 Q(n)，目的通信实体 EC2 确定是否需要关于会聚修改而询问源通信实体 EC1。所应用的一个准则可以例如并且以非限定性方式对应于相对会聚质量 Q(n) 与目标相对会聚质量 Q_{target} 的比较。如果相对会聚质量与目标相对会聚质量之间的偏差小于可配置阈值，则目的通信实体不请求任何会聚修改。

[0166] 如果不需要请求会聚修改，则不执行迭代 E2-5 至 E2-10。

[0167] 在变形方式中，目的通信实体不应用任何准则，并且迭代 E2-5 以及后续迭代得以有系统地执行。

[0168] 在步骤 E2-5 中，目的通信实体估计在目标相对会聚质量 Q_{target} 与相对会聚质量 Q(n) 之间的相对质量偏差 $\Delta Q(n)$。

[0169] 在步骤 E2-6 中，目的通信实体的发射机 EMET2 将会聚修改请求发送到源通信实体。

[0170] 该请求对应于包含在步骤 E2-5 期间确定的相对质量偏差 $\Delta Q(n)$ 的估计的请求的传输。

[0171] 在步骤 E2-7 中，源通信实体的接收机 REC1 接收会聚修改请求，并且从该请求提取相对质量偏差 $\Delta Q(n)$ 的估计。

[0172] 在步骤 E2-8 中，目的通信实体根据值 $\Delta Q(n)$ 估计目的天线与对应于目标相对会聚质量 Q_{target} 的位置 P_{target} 之间的距离 $\Delta L(n)$。

[0173] 可以例如从读取包含作为对会聚点的距离的函数的相对会聚质量测量点的可配置相对质量表而进行距离 $\Delta L(n)$ 的估计。可以使用仿真来预先进行这些测量。

[0174] 在通过前述 0 阶贝塞尔函数评估相对会聚质量的情况下，也可以从贝塞尔函数的应用来获得距离 $\Delta L(n)$ 的估计。

[0175] 在步骤 E2-9 中，源通信实体选择从载波频率和潜伏时延选取的至少一个参数的值。

[0176] 基于图 3 所示的接收信号功率曲线的归一化表示的特性而进行选择，其如下：

[0177] －一方面，其作为距离对会聚点的函数并且因此作为相对运动 v 与潜伏时延 D_L 的乘积的函数是减少的，

[0178] －并且另一方面，其为如此：对于目的天线与会聚点之间的给定距离 L(n)，如果 Q_1 和 Q_2 是各个载波频率 f_1 和 f_2(f_1 小于 f_2) 的两个相对会聚质量值，则 Q_1 大于 Q_2。

[0179] 源通信实体可以因而选择新的载波频率，或者另外选择新的潜伏时延，或者甚至选择载波频率和潜伏时延二者，以兑现会聚修改请求。因而可以通过比较各个载波频率的各个归一化来进行选择。这些接收功率曲线归一化表示例如以质量表的形式预先存储于源通信实体中。

[0180] 可以通过从一个且同一频带而且还有独特频带选取载波频率或者甚至通过选取另一无线电通信系统而进行选择。

[0181] 在步骤 E2-10 中，源通信实体的选择器 SEL1 修改在步骤 E2-9 期间选择的传输参数。以这一对新的参数 $f_p(n+1)$、$D_L(n+1)$ 而反复迭代该方法的各步骤。

[0182] 可以在由源通信实体进行通知之后由目的通信实体或者由本领域技术人员公知的盲类型时间和频率同步方法来考虑这些新的参数。

[0183] 现参照图 6 描述用于动态控制通过源通信实体 EC1 与目的通信实体 EC2 之间的时间反转而预均衡的信号的会聚的方法的第三实施例。

[0184] 该方法是根据可配置迭代频率 F_{iter} 而反复迭代的。在从源通信实体到目的通信实体的数据传输时间期间，可以例如根据获得有效信道估计的频率来确定迭代频率。迭代是由具有指数 n 的迭代步骤 IT 以符号来表示的。基本初始化步骤 INIT 对应于指数 n ＝ 1。

[0185] 在初始化步骤 INIT 期间，源通信实体选择载波频率 $f_p(1)$ 和潜伏时延 $D_L(1)$，以用于山时间反转预均衡的数据信号的传输。与该方法的第 n 迭代对应的载波频率和潜伏时延分别表示为 $f_p(n)$ 和 $D_L(n)$。

[0186] 在步骤 E3-1 中，源通信实体确定待应用于数据信号的预均衡系数。通过源天线 A_1 与目的天线 A_2 之间的传播信道 C_n(EC1 → EC2) 的估计出的冲击响应 $h_{rt,n}(t)$ 的时间反转来给出在当前时刻发送的应用于数据或基准信号的预均衡系数。

[0187] 可以例如通过以下操作来进行该确定：由源通信实体发送脉冲或导频信号，接着由源通信实体或目的通信实体分别根据 FDD 传输模式或 TDD 传输模式分别估计传播信道。在目的实体进行估计的情况下，目的实体将估计传递到源通信实体。

[0188] 在步骤 E3-2 中，源通信实体从源天线 A_1 发送在通过在步骤 E3-1 期间确定的预均衡系数进行预先滤波之后所获得的预均衡数据信号 $s_n(t)$。

[0189] 在步骤 E3-3 中，目的通信实体的评估器 EVAL2 例如依据先前描述的各方法之一根据接收到的信号来评估相对会聚质量 Q(n)。

[0190] 在步骤 E3-4 中，按照相对会聚质量 Q(n)，目的通信实体 EC2 确定是否需要关于会聚修改而询问源通信实体 EC1。所应用的一个准则可以例如并且以非限定性方式对应于相对会聚质量 Q(n) 与目标相对会聚质量 Q_{target} 的比较。如果相对会聚质量与目标相对会聚质量之间的偏差小于可配置阈值，则目的通信实体不请求任何会聚修改。

[0191] 如果不需要寻求会聚修改，则不执行迭代 E3-5 至 E3-10。

[0192] 在变形方式中，目的通信实体不应用任何准则，并且迭代 E3-5 以及后续迭代得以有系统地执行。

[0193] 在步骤E3-5中，目的通信实体估计目的天线与会聚点之间的距离L(n)。该会聚点对应于在潜伏时延已经逝去之前在第n迭代上目的天线相对于源天线的的位置。

[0194] 可以例如从读取相对会聚质量表来进行距离L(n)的估计。可配置质量表包含用于目的天线的各个位置的测量点。可以通过在由目的通信实体进行的学习时段期间进行的相对会聚质量评估或仿真来预先进行这些测量。

[0195] 在如上所述根据0阶贝塞尔函数评估相对会聚质量的情况下，也可以基于贝塞尔函数来进行距离的评估，如下：

[0196] $\mathrm{Bessel}(L(n)) = Q(n)$.

[0197] 在步骤E3-6中，目的通信实体估计目的天线与对应于目标相对会聚质量Q_{target}的位置P_{target}之间的距离$\Delta L(n)$。

[0198] 可以例如从读取先前所描述的相对质量表而进行距离$\Delta L(n)$的估计，其可以用于评估位置P_{target}与会聚点之间的目标距离L_{target}。于是根据$L(n)$与L_{target}之间的差获得距离$\Delta L(n)$。

[0199] 在如上所述根据0阶贝塞尔函数评估相对会聚质量的情况下，也可以基于贝塞尔函数来进行目标距离L_{target}的评估，如下：

[0200] $\mathrm{Bessel}(L_{target}) = Q_{target}$

[0201] 在变形方式中，也可以基于先前配置的值L_{target}来进行距离$\Delta L(n)$的估计。

[0202] 在步骤E3-7中，目的通信实体选择从载波频率和潜伏时延选取的至少一个参数的值。该选择是基于图3所示的接收信号的功率曲线的归一化表示的特性而进行的，其如下：

[0203] －一方面，其作为距离对会聚点的函数并且因此作为相对运动v与潜伏时延D_L的乘积的函数是减少的，

[0204] －并且另一方面，其为如此：对于目的天线与会聚点之间的给定距离$L(n)$，如果Q_1和Q_2是各个载波频率f_1和f_2(f_1小于f_2)的两个相对会聚质量值，则Q_1大于Q_2。

[0205] 目的通信实体可以因而选择新的载波频率，或者另外选择新的潜伏时延，或者甚至选择载波频率和潜伏时延二者，以兑现会聚修改请求。因而可以通过比较各个载波频率的各个归一化表示来进行选择。这些接收功率曲线的归一化表示例如以质量表的形式预先存储于目的通信实体中。

[0206] 可以通过从一个且同一频带而且还有从独特频带选取载波频率或者甚至通过选取另一无线电通信系统而进行选择。

[0207] 在步骤E3-8中，目的通信实体的发射机EMET2将会聚修改请求发送到源通信实体。

[0208] 该请求对应于包含对所选频率值和或所选潜伏延迟的参考的请求的传输。

[0209] 在步骤E3-9中，源通信实体的接收机REC1接收会聚修改请求，并且从该请求提取对所选频率和/或所选潜伏时延的值的参考。

[0210] 在步骤E3-10中，源通信实体的选择器SEL1修改在步骤E3-9期间由目的通信实体选择的传输参数。

[0211] 以这一对新的参数$f_p(n+1)$、$D_L(n+1)$而反复迭代该方法的各步骤。

[0212] 在变形方式中，于在步骤E3-9期间源通信实体的接收机REC1已经接收到修改请

求之后，源通信实体基于源通信实体所发送的参考来选择从载波频率和潜伏时延选取的至少一个参数的值。可以如在步骤 E3-6 中描述的那样进行该选择。

[0213] 源通信实体的选择器 SEL1 于是修改传输参数。在此情况下，可以在由源通信实体进行通知之后由目的通信实体或者由本领域技术人员公知的盲类型时间和频率同步方法来考虑这些新的参数。

[0214] 现参照图 7 描述用于动态控制通过源通信实体 EC1 与目的通信实体 EC2 之间的时间反转而预均衡的信号的会聚的方法的第四实施例。

[0215] 该方法是根据可配置迭代频率 F_{iter} 而反复迭代的。在从源通信实体到目的通信实体的数据传输时间期间，可以例如根据获得有效信道估计的频率来确定迭代频率。迭代是由具有指数 n 的迭代步骤 IT 以符号来表示的。基本初始化步骤 INIT 对应于指数 $n = 1$。

[0216] 在初始化步骤 INIT 期间，源通信实体选择载波频率 $f_p(1)$ 和潜伏时延 $D_L(1)$，以用于由时间反转预均衡的数据信号的传输。与该方法的第 n 迭代对应的载波频率和潜伏时延分别表示为 $f_p(n)$ 和 $D_L(n)$。

[0217] 在步骤 E4-1 中，源通信实体确定待应用于数据信号的预均衡系数。通过源天线 A_1 与目的天线 A_2 之间的传播信道 $C_n(EC1 \rightarrow EC2)$ 的估计出的冲击响应 $h_{rt,n}(t)$ 的时间反转来给出在当前时刻发送的应用于数据或基准信号的预均衡系数。

[0218] 可以例如通过以下操作来进行该确定：由源通信实体发送脉冲或导频信号，接着由源通信实体或目的通信实体分别根据 FDD 传输模式或 TDD 传输模式分别估计传播信道。在目的实体进行估计的情况下，目的实体将估计传递到源通信实体。

[0219] 在步骤 E4-2 中，源通信实体从源天线 A_1 发送在步骤 E4-1 期间确定的预均衡系数进行预先滤波所获得的预均衡数据信号 $s_n(t)$。

[0220] 在步骤 E4-3 中，目的通信实体的评估器 EVAL2 例如依据先前描述的各方法之一根据接收到的信号来评估相对会聚质量 Q(n)。

[0221] 在步骤 E4-4 中，按照相对会聚质量 Q(n)，目的通信实体 EC2 确定是否需要关于会聚修改而询问源通信实体 EC1。所应用的一个准则可以例如并且以非限定性方式对应于相对会聚质量 Q(n) 与目标相对会聚质量 Q_{target} 的比较。如果相对会聚质量与目标相对会聚质量之间的偏差小于可配置阈值，则目的通信实体不请求任何会聚修改。

[0222] 如果不需要请求会聚修改，则不执行迭代 E4-5 至 E4-9。

[0223] 在变形方式中，目的通信实体不应用任何准则，并且迭代 E4-9 以及后续迭代得以有系统地执行。

[0224] 在步骤 E4-5 中，目的通信实体确定在步骤 E4-4 中评估的相对会聚质量 Q(n) 与目标相对会聚质量 Q_{target} 之间的偏差 $\Delta Q(n)$。取决于接收功率曲线的特性（其作为距离对会聚点的函数而单调递减），目的实体，根据偏差 $\Delta Q(n)$ 的符号来确定目的天线是太靠近还是太远离会聚点，以使其能够获得相对会聚质量 Q_{target}。目的通信实体因而定义变化指数 $IND_{var}(n)$，其指示其对移动远离还是移动更接近于会聚点的期望。该变化指数可以例如并且以非限定性方式是所述符号，或者甚至是偏差 $\Delta Q(n)$ 的值。

[0225] 在步骤 E4-6 中，目的通信实体的发射机 EMET2 将会聚修改请求发送到源通信实体。

[0226] 该请求对应于包含在步骤 E1-6 期间确定的变化指数 $IND_{var}(n)$ 的请求的传输。

[0227] 在步骤 E4-7 中，源通信实体的接收机 REC1 接收会聚修改请求，并且提取该请求中所包含的变化指数 $IND_{var}(n)$。

[0228] 在步骤 E4-8 中，源通信实体选择从与变化指数 $IND_{var}(n)$ 对应的载波频率和潜伏时延选取的至少一个参数的值。因而，在与请求对应的指数移动更接近于会聚点的情况下，源通信实体选择配对 $[f_p(n+1), D_L(n+1)]$，从而乘积 $f_p(n+1).D_L(n+1)$ 小于乘积 $f_p(n).D_L(n)$。

[0229] 例如，源通信实体选择小于频率 $f_p(n)$ 的，或者另外通过可配置值 $-\Delta f$ 的频偏而获得的，频率 $f_p(n+1)$。

[0230] 源通信实体也可以选择小于潜伏时延 $D_L(n)$ 的，或者甚至通过缩减可配置时延 Δt 而获得的潜伏时延 $D_L(n+1)$。

[0231] 源通信实体也可以组合载波频率的改变与潜伏时延的改变。也可以在一个且同一频带中、在独特频带中或甚至对于另一无线电通信系统而进行载波频率的选择。

[0232] 相似地，在与请求对应的变化指数 $IND_{var}(n)$ 移动远离于会聚点的情况下，源通信实体选择配对 $[f_p(n+1), D_L(n+1)]$，从而乘积 $f_p(n+1).D_L(n+1)$ 大于乘积 $f_p(n).D_L(n)$。

[0233] 在步骤 E4-9 中，源通信实体的选择器 SEL1 修改在步骤 E4-8 期间选择的传输参数。以这一对新的参数 $f_p(n+1)$、$D_L(n+1)$ 而反复迭代该方法的各步骤。

[0234] 可以在由源通信实体进行通知之后由目的通信实体或者由本领域技术人员公知的盲类型时间和频率同步方法来考虑这些新的参数。

[0235] 该方法也可以实现为双向传输。在特定实施例中，以信号并非同时在两个传输方向上发送的方式在两个传输方向上实现该方法。

[0236] 在此描述的本发明涉及一种设备，用于动态控制目的通信实体中所实现的通过时间反转而预均衡的信号的会聚。因而，本发明还应用于计算机程序，显著地，在信息存储介质上或其中的计算机程序，适合于实现本发明。该程序可以使用任何编程语言，并且以源代码、目标代码形式，或者源代码与目标代码之间的中间代码的形式，例如具体地编译形式，或者以对于实现目的通信实体中实现的根据本发明的方法的各步骤中的操作而期望的任何其它形式。

[0237] 在此描述的本发明还涉及一种设备，用于动态控制源通信实体中所实现的通过时间反转而预均衡的信号的会聚。因而，本发明还应用于计算机程序，显著地，在信息存储介质上或其中的计算机程序，适合于实现本发明。该程序可以使用任何编程语言，并且以源代码、目标代码形式，或者源代码与目标代码之间的中间代码的形式，例如具体地编译形式，或者以对于实现源通信实体中实现的根据本发明的方法的各步骤中的操作而期望的任何其它形式。

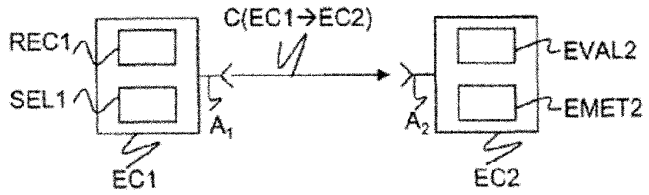
C(EC1→EC2)
REC1
SEL1
A1
EC1
A2
EVAL2
EMET2
EC2

图 1

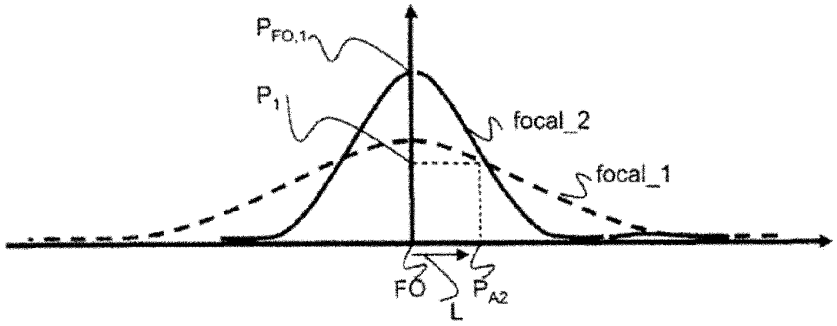
PFO,1
P1
focal_2
focal_1
FO
L
PA2

图 2

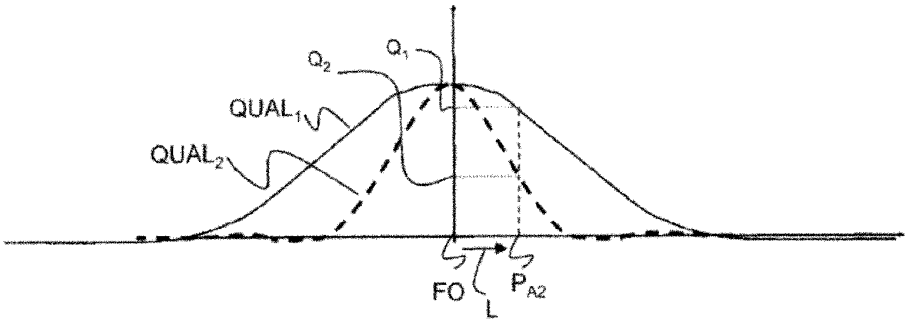
Q2
Q1
QUAL1
QUAL2
FO
L
PA2

图 3

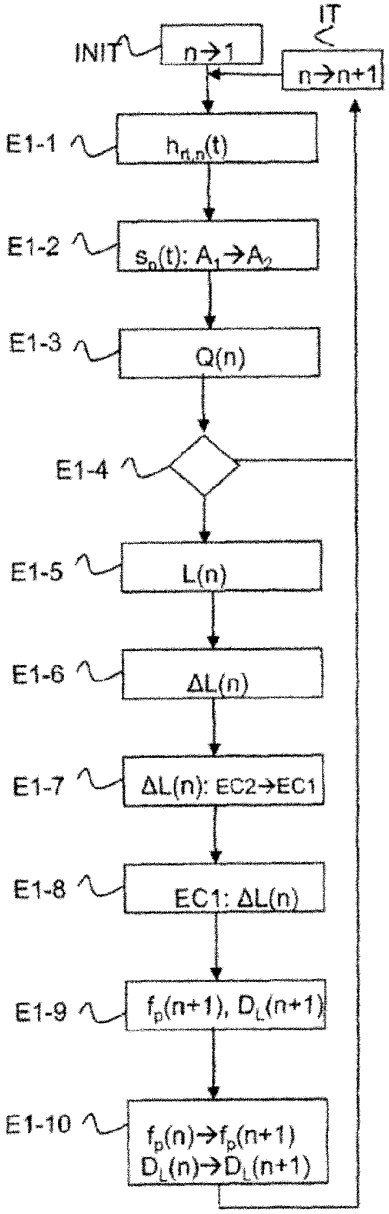
INIT
n→1
IT
n→n+1
E1-1
$h_{rt,n}(t)$
E1-2
$s_n(t)$: $A_1 \rightarrow A_2$
E1-3
Q(n)
E1-4
E1-5
L(n)
E1-6
ΔL(n)
E1-7
ΔL(n): EC2→EC1
E1-8
EC1: ΔL(n)
E1-9
$f_p(n+1)$, $D_L(n+1)$
E1-10
$f_p(n) \rightarrow f_p(n+1)$
$D_L(n) \rightarrow D_L(n+1)$

图 4

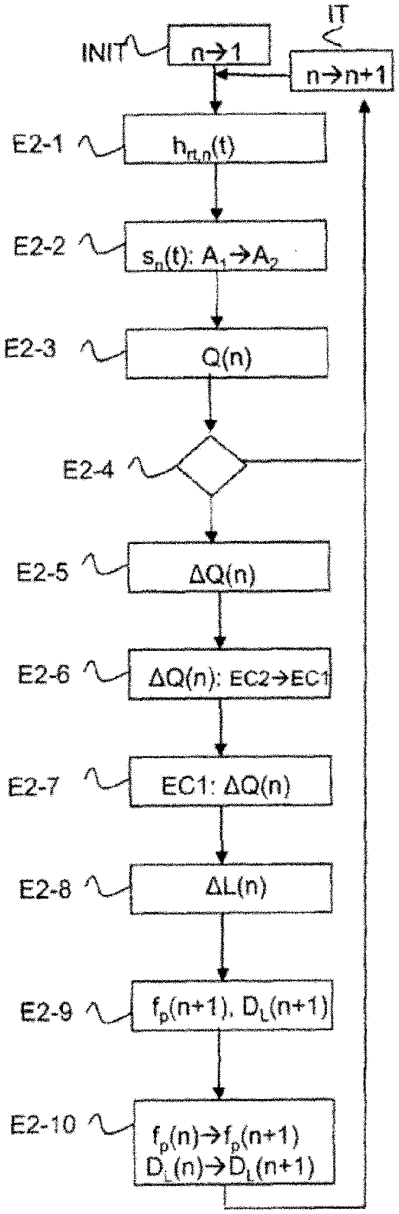
INIT
n→1
IT
n→n+1
E2-1
$h_{rt,n}(t)$
E2-2
$s_n(t)$: $A_1 \rightarrow A_2$
E2-3
Q(n)
E2-4
E2-5
ΔQ(n)
E2-6
ΔQ(n): EC2→EC1
E2-7
EC1: ΔQ(n)
E2-8
ΔL(n)
E2-9
$f_p(n+1)$, $D_L(n+1)$
E2-10
$f_p(n) \rightarrow f_p(n+1)$
$D_L(n) \rightarrow D_L(n+1)$

图 5

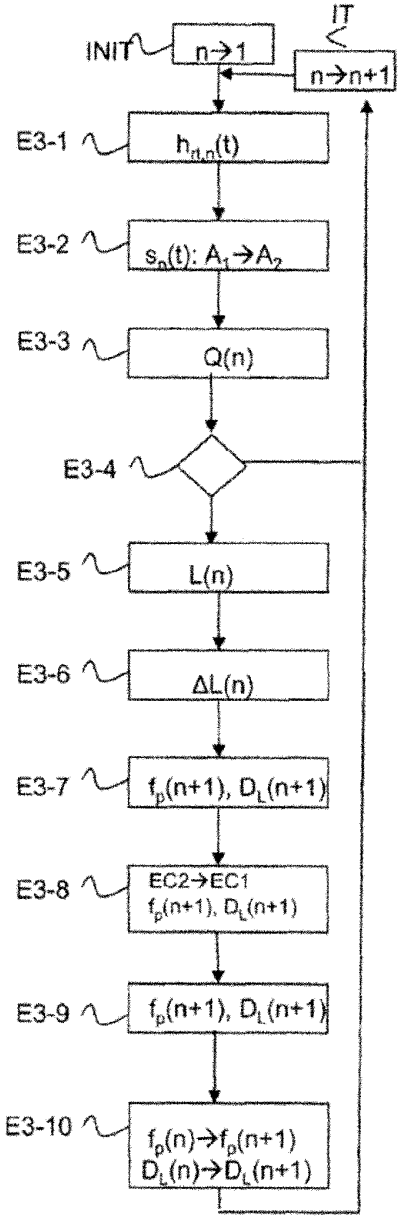
INIT
n→1
IT
n→n+1
E3-1
$h_{n,n}(t)$
E3-2
$s_n(t)$: $A_1 \rightarrow A_2$
E3-3
Q(n)
E3-4
E3-5
L(n)
E3-6
ΔL(n)
E3-7
$f_p(n+1)$, $D_L(n+1)$
E3-8
EC2→EC1
$f_p(n+1)$, $D_L(n+1)$
E3-9
$f_p(n+1)$, $D_L(n+1)$
E3-10
$f_p(n) \rightarrow f_p(n+1)$
$D_L(n) \rightarrow D_L(n+1)$

图 6

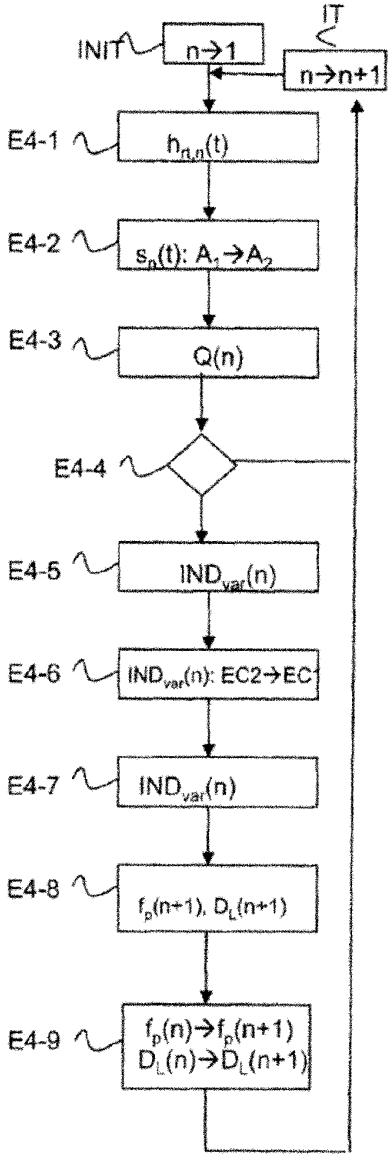
INIT
n→1
IT
n→n+1
E4-1
$h_{n,n}(t)$
E4-2
$s_n(t)$: $A_1 \rightarrow A_2$
E4-3
Q(n)
E4-4
E4-5
$IND_{var}(n)$
E4-6
$IND_{var}(n)$: EC2→EC1
E4-7
$IND_{var}(n)$
E4-8
$f_p(n+1)$, $D_L(n+1)$
E4-9
$f_p(n) \rightarrow f_p(n+1)$
$D_L(n) \rightarrow D_L(n+1)$

图 7

Electronic Patent Application Fee Transmittal

Application Number:	
Filing Date:	
Title of Invention:	USER-FOCUSING TECHNIQUE FOR WIRELESS COMMUNICATION SYSTEMS
First Named Inventor/Applicant Name:	Xuefeng YIN
Filer:	Robert Burns Israelsen/Tonya Kusitor
Attorney Docket Number:	I1013.10038US01

Filed as Large Entity

U.S. National Stage under 35 USC 371 Filing Fees

Description	Fee Code	Quantity	Amount	Sub-Total in USD($)
Basic Filing:				
National Stage Fee	1631	1	380	380
Natl Stage Search Fee - Report provided	1642	1	490	490
National Stage Exam - all other cases	1633	1	250	250
Pages:				
Claims:				
Claims in excess of 20	1615	5	60	300
Independent claims in excess of 3	1614	1	250	250
Miscellaneous-Filing:				

Description	Fee Code	Quantity	Amount	Sub-Total in USD($)
Petition:				
Patent-Appeals-and-Interference:				
Post-Allowance-and-Post-Issuance:				
Extension-of-Time:				
Miscellaneous:				
			Total in USD ($)	**1670**

Electronic Acknowledgement Receipt

EFS ID:	13245604
Application Number:	13522422
International Application Number:	PCT/CN11/77718
Confirmation Number:	1084
Title of Invention:	USER-FOCUSING TECHNIQUE FOR WIRELESS COMMUNICATION SYSTEMS
First Named Inventor/Applicant Name:	Xuefeng YIN
Customer Number:	97149
Filer:	Robert Burns Israelsen/Tonya Kusitor
Filer Authorized By:	Robert Burns Israelsen
Attorney Docket Number:	I1013.10038US01
Receipt Date:	16-JUL-2012
Filing Date:	
Time Stamp:	15:35:29
Application Type:	U.S. National Stage under 35 USC 371

Payment information:

Submitted with Payment	yes
Payment Type	Credit Card
Payment was successfully received in RAM	$1670
RAM confirmation Number	2298
Deposit Account	
Authorized User	

File Listing:

Document Number	Document Description	File Name	File Size(Bytes)/ Message Digest	Multi Part /.zip	Pages (if appl.)

1	Transmittal of New Application	CN-810895-02-US-NAT_Transmittal.pdf	247776 6fbd2927235a620bc1e2c949270dab201edc9399	no	4
Warnings:					
Information:					
2	Application Data Sheet	CN-810895-02-US-NAT_ADS.pdf	1421317 9cbfd40e2cf88f2eeee3bd18d9ccd0cd11a7204e	no	4
Warnings:					
Information:					
3	Oath or Declaration filed	CN-810895-02-US-NAT_Dec.pdf	3926795 2502d795d94f20ccc2d7653ed933c52ad590fa72	no	4
Warnings:					
Information:					
4	Documents submitted with 371 Applications	CN-810895-02-US-NAT_PCTRequest.pdf	91087 7d5a630ef885b423341ce082d7ec5dd5716e1e67	no	3
Warnings:					
Information:					
5		CN-810895-02-US-NAT_Spec.pdf	452196 d76a638d2b574e637fcb26de5b9819934b097b07	yes	29
	Multipart Description/PDF files in .zip description				
	Document Description		**Start**	**End**	
	Specification		1	22	
	Claims		23	28	
	Abstract		29	29	
Warnings:					
Information:					
6	Drawings-only black and white line drawings	CN-810895-02-US-NAT_Drawings.pdf	45427 6d1457c5e9a7011578c1dfcc18c393f587e658b9	no	4
Warnings:					
Information:					
7		CN-810895-02-US-NAT_PrelimAmend.pdf	253509 d2a5eb48393b80600f1c0203d3700880653a5f4c	yes	9
	Multipart Description/PDF files in .zip description				
	Document Description		**Start**	**End**	

	Preliminary Amendment		1	1	
	Claims		2	8	
	Abstract		9	9	
Warnings:					
Information:					
8	Power of Attorney	CN-810895-02-US-NAT_GPoA.PDF	97955 cd3881b1cd404583814db59f2851b113246b4218	no	2
Warnings:					
Information:					
9	Documents submitted with 371 Applications	CN-810895-02-US-NAT_ISRWO.pdf	2076445 17b97b61667f922d4b61edff4124b6a21b736f0c	no	14
Warnings:					
Information:					
10	Information Disclosure Statement (IDS) Form (SB08)	CN-810895-02-US-NAT_AsFiledIDS.PDF	613462 ca7924f3a6871b9a1d565becdc385e973a044459	no	5
Warnings:					
Information:					
11	Foreign Reference	WO2011012031A1.PDF	24901407 d92c5bf3be8607ed2976591898082a3e363bc09c	no	26
Warnings:					
Information:					
12	Foreign Reference	CN102138309A.pdf	1751472 64cb60d4f8a110a81b6f8254776040a85055a505	no	23
Warnings:					
Information:					
13	Non Patent Literature	NPL3.PDF	633885 8890cd250319026794f1bdc4d2152c8277ed36b6	no	31
Warnings:					
Information:					
14	Non Patent Literature	NPL4.PDF	8016575 5a5d12a57c56414273ae1574c49e385e7d967c24	no	4
Warnings:					
Information:					

15	Non Patent Literature	NPL5.PDF	674236 2ce9f74c52bced02f6f0f4220e1419d314a1d4cd	no	7
Warnings:					
Information:					
16	Non Patent Literature	NPL6.PDF	363544 128d0830dfc9025efa7bcdfbe6a6917beb1970f5	no	4
Warnings:					
Information:					
17	Non Patent Literature	NPL7.PDF	972202 80b5dee20dd3063836c768d3d56831f8da640bd6	no	17
Warnings:					
Information:					
18	Non Patent Literature	NPL8.PDF	4625646 a0777b3cd77f115d2c3f193bad841f246dcaa4f9	no	8
Warnings:					
Information:					
19	Non Patent Literature	NPL9.PDF	99303 86ed26b97c0a166cde0293eac5399c394ed6af09	no	6
Warnings:					
Information:					
20	Fee Worksheet (SB06)	fee-info.pdf	38455 055761d519957dcc3545bae2c132927570a68f4c	no	2
Warnings:					
Information:					
		Total Files Size (in bytes):	51302694		

This Acknowledgement Receipt evidences receipt on the noted date by the USPTO of the indicated documents, characterized by the applicant, and including page counts, where applicable. It serves as evidence of receipt similar to a Post Card, as described in MPEP 503.

New Applications Under 35 U.S.C. 111
If a new application is being filed and the application includes the necessary components for a filing date (see 37 CFR 1.53(b)-(d) and MPEP 506), a Filing Receipt (37 CFR 1.54) will be issued in due course and the date shown on this Acknowledgement Receipt will establish the filing date of the application.

National Stage of an International Application under 35 U.S.C. 371
If a timely submission to enter the national stage of an international application is compliant with the conditions of 35 U.S.C. 371 and other applicable requirements a Form PCT/DO/EO/903 indicating acceptance of the application as a national stage submission under 35 U.S.C. 371 will be issued in addition to the Filing Receipt, in due course.

New International Application Filed with the USPTO as a Receiving Office
If a new international application is being filed and the international application includes the necessary components for an international filing date (see PCT Article 11 and MPEP 1810), a Notification of the International Application Number and of the International Filing Date (Form PCT/RO/105) will be issued in due course, subject to prescriptions concerning national security, and the date shown on this Acknowledgement Receipt will establish the international filing date of the application.

PTO/SB/06 (07-06)
Approved for use through 1/31/2007. OMB 0651-0032
U.S. Patent and Trademark Office; U.S. DEPARTMENT OF COMMERCE
Under the Paperwork Reduction Act of 1995, no persons are required to respond to a collection of information unless it displays a valid OMB control number.

PATENT APPLICATION FEE DETERMINATION RECORD

Substitute for Form PTO-875

Application or Docket Number	Filing Date	
13/522,422	07/16/2012	☐ To be Mailed

APPLICATION AS FILED – PART I

FOR	(Column 1) NUMBER FILED	(Column 2) NUMBER EXTRA	SMALL ENTITY ☐ RATE ($)	SMALL ENTITY FEE ($)	OR	OTHER THAN SMALL ENTITY RATE ($)	OTHER THAN SMALL ENTITY FEE ($)
☐ BASIC FEE (37 CFR 1.16(a), (b), or (c))	N/A	N/A	N/A			N/A	
☐ SEARCH FEE (37 CFR 1.16(k), (i), or (m))	N/A	N/A	N/A			N/A	
☐ EXAMINATION FEE (37 CFR 1.16(o), (p), or (q))	N/A	N/A	N/A			N/A	
TOTAL CLAIMS (37 CFR 1.16(i))	minus 20 =	*	X $ =		OR	X $ =	
INDEPENDENT CLAIMS (37 CFR 1.16(h))	minus 3 =	*	X $ =			X $ =	
☐ APPLICATION SIZE FEE (37 CFR 1.16(s))	If the specification and drawings exceed 100 sheets of paper, the application size fee due is $250 ($125 for small entity) for each additional 50 sheets or fraction thereof. See 35 U.S.C. 41(a)(1)(G) and 37 CFR 1.16(s).						
☐ MULTIPLE DEPENDENT CLAIM PRESENT (37 CFR 1.16(j))							
* If the difference in column 1 is less than zero, enter "0" in column 2.			TOTAL			TOTAL	

APPLICATION AS AMENDED – PART II

AMENDMENT 07/16/2012

	(Column 1) CLAIMS REMAINING AFTER AMENDMENT		(Column 2) HIGHEST NUMBER PREVIOUSLY PAID FOR	(Column 3) PRESENT EXTRA	SMALL ENTITY RATE ($)	SMALL ENTITY ADDITIONAL FEE ($)	OR	OTHER THAN SMALL ENTITY RATE ($)	OTHER THAN SMALL ENTITY ADDITIONAL FEE ($)
Total (37 CFR 1.16(i))	* 25	Minus	** 25	= 0	X $ =		OR	X $60=	0
Independent (37 CFR 1.16(h))	* 4	Minus	***4	= 0	X $ =		OR	X $250=	0
☐ Application Size Fee (37 CFR 1.16(s))									
☐ FIRST PRESENTATION OF MULTIPLE DEPENDENT CLAIM (37 CFR 1.16(j))							OR		
					TOTAL ADD'L FEE		OR	TOTAL ADD'L FEE	0

AMENDMENT

	(Column 1) CLAIMS REMAINING AFTER AMENDMENT		(Column 2) HIGHEST NUMBER PREVIOUSLY PAID FOR	(Column 3) PRESENT EXTRA	RATE ($)	ADDITIONAL FEE ($)		RATE ($)	ADDITIONAL FEE ($)
Total (37 CFR 1.16(i))	*	Minus	**	=	X $ =		OR	X $ =	
Independent (37 CFR 1.16(h))	*	Minus	***	=	X $ =		OR	X $ =	
☐ Application Size Fee (37 CFR 1.16(s))									
☐ FIRST PRESENTATION OF MULTIPLE DEPENDENT CLAIM (37 CFR 1.16(j))							OR		
					TOTAL ADD'L FEE		OR	TOTAL ADD'L FEE	

* If the entry in column 1 is less than the entry in column 2, write "0" in column 3.
** If the "Highest Number Previously Paid For" IN THIS SPACE is less than 20, enter "20".
*** If the "Highest Number Previously Paid For" IN THIS SPACE is less than 3, enter "3".
The "Highest Number Previously Paid For" (Total or Independent) is the highest number found in the appropriate box in column 1.

Legal Instrument Examiner:
/CORALIA BETANCOURT/

This collection of information is required by 37 CFR 1.16. The information is required to obtain or retain a benefit by the public which is to file (and by the USPTO to process) an application. Confidentiality is governed by 35 U.S.C. 122 and 37 CFR 1.14. This collection is estimated to take 12 minutes to complete, including gathering, preparing, and submitting the completed application form to the USPTO. Time will vary depending upon the individual case. Any comments on the amount of time you require to complete this form and/or suggestions for reducing this burden, should be sent to the Chief Information Officer, U.S. Patent and Trademark Office, U.S. Department of Commerce, P.O. Box 1450, Alexandria, VA 22313-1450. DO NOT SEND FEES OR COMPLETED FORMS TO THIS ADDRESS. **SEND TO: Commissioner for Patents, P.O. Box 1450, Alexandria, VA 22313-1450.**
If you need assistance in completing the form, call 1-800-PTO-9199 and select option 2.