IN THE UNITED STATES DISTRICT COURT
FOR THE WESTERN DISTRICT OF TEXAS
MIDLAND/ODESSA DIVISION

INTELLECTUAL VENTURES I LLC and INTELLECTUAL VENTURES II LLC,	§	
Plaintiffs,	§	Civil Action No. 7:24-cv-00277-ADA
v.	§	JURY TRIAL DEMANDED
SOUTHWEST AIRLINES CO.,	§	
Defendant.	§	

DEFENDANT SOUTHWEST AIRLINES CO.'S
PRELIMINARY INVALIDITY CONTENTIONS

Pursuant to the Court's Standing Order Governing Proceedings ("OGP"), Defendant Southwest Airlines Co. ("Defendant" or "Southwest") submits the following Invalidity Contentions regarding United States Patent Nos. 8,332,844 (the '844 Patent), 8,407,722 (the '722 Patent), 7,949,785 (the '785 Patent), 8,027,326 (the '326 Patent), 7,324,469 (the '469 Patent), 7,257,582 (the '582 Patent), 7,712,080 (the '080 Patent), 7,721,282 (the '282 Patent), 8,352,584 (the '584 Patent), and 11,032,000 (the '000 Patent) (collectively, the "Asserted Patents"). Southwest makes these Invalidity Contentions based on its present understanding of Plaintiffs Intellectual Ventures I LLC's and Intellectual Ventures II LLC's ("Plaintiffs" or "IV") Preliminary Infringement Contentions (the "Infringement Contentions") and the contended scope of the asserted claims.

The currently asserted claims are identified in the table below (collectively, the "Asserted Claims").

Patent	Asserted Claims[1]
’844 Patent	7 and 11
’722 Patent	14, 16, 17, and 18
’785 Patent	30, 35, and 37
’326 Patent	1, 4, and 18
’469 Patent	24, 25, 26, 28, and 32
’582 Patent	1, 2, 5, and 7
’080 Patent	1, 3–6, 9, 17, and 18
’282 Patent	1, 4, 5, 8–10, 13, 15–17, 20, 21, 24–26, 29
’584 Patent	1–13
’000 Patent	1–6, 13–18

Some of the patents in this case were previously asserted against Liberty Mutual, which prepared detailed invalidity contentions on those patents that are included with Southwest’s document production and are hereby incorporated by reference as if set forth in full. Southwest reserves the right to rely on any invalidity positions asserted therein.

I. PRELIMINARY STATEMENT

These invalidity contentions are preliminary in nature and do not address claim construction or noninfringement. Southwest reserves all rights with respect to such issues, including its position that claims of the Asserted Patents should be construed in a particular manner and/or are not infringed. These invalidity contentions are based on Southwest’s current knowledge, understanding, and belief of the Asserted Patents and prior art, of Plaintiffs’ infringement theories

[1] Plaintiffs’ Second Amended Preliminary Infringement Contentions, served May 28, 2025.

(as disclosed in the Infringement Contentions), and of the facts and other information available as of the date of these invalidity contentions. Southwest's investigation, discovery, and analysis of information related to this action are ongoing. Additional discovery and/or orders of the Court may require Southwest to amend or supplement these invalidity contentions, and Southwest reserves the right to do so as the case proceeds. These contentions represent Southwest's good-faith effort to provide a comprehensive identification of prior art relevant to this case, but Southwest reserves the right to modify or supplement its prior art list and invalidity contentions at a later time with, or based upon, pertinent information that may be subsequently discovered.

A. No Waiver

Nothing in these invalidity contentions is intended, nor should be construed, as a waiver of any claim construction argument, noninfringement position, or argument under Pre-AIA 35 U.S.C. § 101, 102, 103, and/or 112. Southwest's statements herein (including the accompanying claim charts) reflect Southwest's present understanding of the purported scope of the claims as alleged by Plaintiffs in their Infringement Contentions. For the avoidance of doubt, these contentions are not intended to present or argue in favor of any construction of the Asserted Claims, and Southwest reserves the right to present constructions that differ from any construction that may be alleged to underlie these contentions. These invalidity contentions do not constitute an acquiescence to Plaintiffs' interpretation of any claims to the extent they depart from the plain meaning of the Asserted Claims and from the proper scope of the claims as may be subsequently construed by the Court. Southwest disagrees with Plaintiffs' positions as to the purported scope of the Asserted Claims to the extent they seek to expand the scope of the Asserted Claims beyond their proper construction.

The Asserted Claims have not yet been construed by the Court in this case and, thus, Southwest has not yet had the opportunity to compare the Asserted Claims of the Asserted Patents

(as construed by the Court) with the prior art. Southwest reserves the right to amend, supplement, or materially modify its invalidity contentions after the claims have been construed by the Court in this case. Southwest also reserves the right to amend, supplement, or materially modify its invalidity contentions in response to any claim construction positions that Plaintiffs may take, and to assert that a claim is indefinite, not enabled, or fails to meet the written description requirement of Pre-AIA 35 U.S.C. § 112 based on any claim construction position Plaintiffs may take in this case or based on any claim construction the Court may adopt in this case.

B. No Admission

Nothing disclosed herein is an admission or acknowledgement that any product accused of infringement by Plaintiffs in its Infringement Contentions (the "Accused Products"), or any of Southwest's other products or services, infringes any of the Asserted Claims.

Plaintiffs do not currently assert that any claim limitation is met under the doctrine of equivalents. However, to the extent that Plaintiffs are later permitted by the Court to amend its contentions to pursue any currently undisclosed doctrine of equivalents theories, Southwest reserves the right to supplement or amend these invalidity contentions to account for such amendments.

To the extent that any of the prior art references disclose the same functionality or feature of any of the Accused Products, Southwest reserves the right to argue that said feature or functionality does not practice any element of any of the Asserted Claims, and to argue, in the alternative, that if said feature or functionality is found to practice any element of any of the Asserted Claims, then the prior art reference demonstrates that the element is not novel, is obvious, and/or is otherwise not patentable.

Attached hereto are representative claim charts that demonstrate how the Asserted Claims of the Asserted Patents are invalid in view of certain prior art. The references cited in the attached

claim charts may disclose the limitations of the Asserted Claims expressly and/or inherently. The suggested obviousness combinations may be presented in conjunction with or in the alternative to any contentions regarding anticipation. These obviousness combinations should not be construed to suggest that any reference included in any combination is not anticipatory in its own right.

C. Reservation of Rights

Prior art not included in this disclosure may become relevant. Southwest is currently unaware of the extent, if any, to which Plaintiffs will contend that limitations of the Asserted Claims are not disclosed in the prior art identified by Southwest. Southwest reserves the right to identify other references that would have made the addition of the allegedly missing limitation to the disclosed device or method obvious or show that the allegedly missing limitation would have been known or readily apparent to one of ordinary skill in the art at the time of the invention in light of the disclosure of the prior art at issue.

Southwest provides these invalidity contentions only for the claims asserted by Plaintiffs, but reserves the right to seek invalidation of all claims in the Asserted Patents.

D. Ongoing Investigation

Southwest's investigation is ongoing, and Southwest reserves the right to amend its disclosures and document production to account for evidence uncovered as its investigation continues. Such amendments include identifying and relying on additional references that may result from Southwest's further search and analysis. Southwest reserves the right to supplement these contentions in light of any additional prior art of which Plaintiffs are aware and did not disclose to Southwest in discovery, or that might be subsequently disclosed by Plaintiffs in response to Southwest's discovery requests. Southwest anticipates issuing subpoenas to third parties believed to have knowledge, documentation and/or corroborating evidence concerning some of the prior art listed herein and/or additional prior art. These third parties include, but are

not limited to, the authors, employers of authors, inventors, assignees, or former or current employees of assignees, of the references and/or products identified in these invalidity contentions. Southwest reserves the right to supplement these contentions in light of any newly discovered information produced by these or other third parties from which Southwest may seek discovery.

Additionally, because discovery is ongoing, Southwest reserves the right to present additional prior art references and/or disclosures under 35 U.S.C. §§ 101, 102, and/or 103, located during the course of such discovery or further investigation, and to assert invalidity under Pre-AIA 35 U.S.C. §§ 102(c), (d), or (f), to the extent that such discovery or investigation yields information forming the basis for such invalidity.

Based on Southwest's investigation and knowledge developed to date, and pursuant to the Court's OGP, Southwest: (1) serves, attached as exhibits hereto, charts setting forth where in the prior art references each element of the Asserted Claims are found, (2) identifies any limitations Southwest contends are indefinite or lack written description under § 112, and (3) identifies any claims Southwest contends are directed to ineligible subject matter under § 101. Southwest's § 101 contentions (1) identify the alleged abstract idea, law of nature, and/or natural phenomenon in each challenged claim; (2) identify each claim element alleged to be well-understood, routine, and/or conventional; and (3) to the extent not duplicative of §§ 102/103 prior art contentions, prior art for the contention that claim elements are well-understood, routine, and/or conventional. Southwest has previously produced, or has produced with these invalidity contentions, the prior art referenced in the invalidity contentions. As for technical documents, including software where applicable, sufficient to show the operation of the accused product(s), IV has accused Southwest of using certain open-source software programs that are not owned or controlled by Southwest but are publicly available here.

https://docs.docker.com/build-cloud/

https://kubernetes.io/docs/home/

https://kafka.apache.org/documentation/

https://hadoop.apache.org/docs/current/

https://spark.apache.org/docs/latest/

IV has not accused specific implementations of those programs at Southwest. To the extent that IV does at some point identify specific uses or implementations at Southwest, Southwest will supplement the production to include any additional available technical details, if any. For the '469 and '326 patents, Southwest has produced its contracts but does not have technical documents. Those documents are in the possession, custody and control of Viasat and Anuvu. For the '000 patent asserted against the AvioCast Aircraft Interface Device, the technical documents regarding device specifications and technical capability are in the possession, custody and control of Thales (which now owns AvioCast).

II. THE ASSERTED PATENTS

Southwest sets forth a summary of its current understanding of the state of the art for the general subject matter of the Asserted Patents. Southwest reserves the right to rely on each of the prior art references disclosed below and charted in the attached Exhibits. Southwest also reserves the right to rely on the discussions of the state of the art and prior art for the Asserted Patents and their respective file histories, including any prior art cited in the file histories, in explaining the state of the art and the ways that each respective reference corresponds with the Asserted Claims. Southwest further expressly reserves the right to supplement its summary of the state of the art, including for example, by information from any of the authors, named inventors, or assignees of any of the prior art references, by personnel familiar with products based on any of the prior art, or by technical experts retained on behalf of any party.

A. Overview of the ’844 Patent

The ’844 Patent initially describes clustered computing involving multiple compute nodes with Operating System (“OS”) software image management, where nodes are activated by diskless booting protocols or remote software installation to local storage, and where a boot image is required for each node in the cluster – and states that storing a boot image for each server results in wasted storage, and copying the entire master image at boot results in long boot times. ’844 Patent, 1:31-67. The Background also discusses branching-store file systems where a read-only “root” image is accessible by all nodes, and changes made by a node to the root image are stored in a “leaf” image unique to that node – with a filter operating between the nodes and the OS file system(s) that merges the leaf images with the root image and delivers the result to the appropriate node (which the node views as its own cohesive instance of the application environment). *Id.* 2:13-24.

The ’844 Patent’s system, as shown in Fig. 1, includes a general purpose computing system environment, such as compute node 100, which includes at least one processing unit 102 and memory 104). *Id.* 4:27-36. Nodes may also have additional features, including additional removable 108 and/or non-removable 110 storage, communications connections 112, input devices 114, and output devices 116. *Id.* 4:36-5:10. Memory 104, removable storage 108, and non-removable storage 110 are all computer storage media, which includes “any…medium which can be used to store the desired information and which can be accessed by compute node 100.” *Id.* 4:46-55.

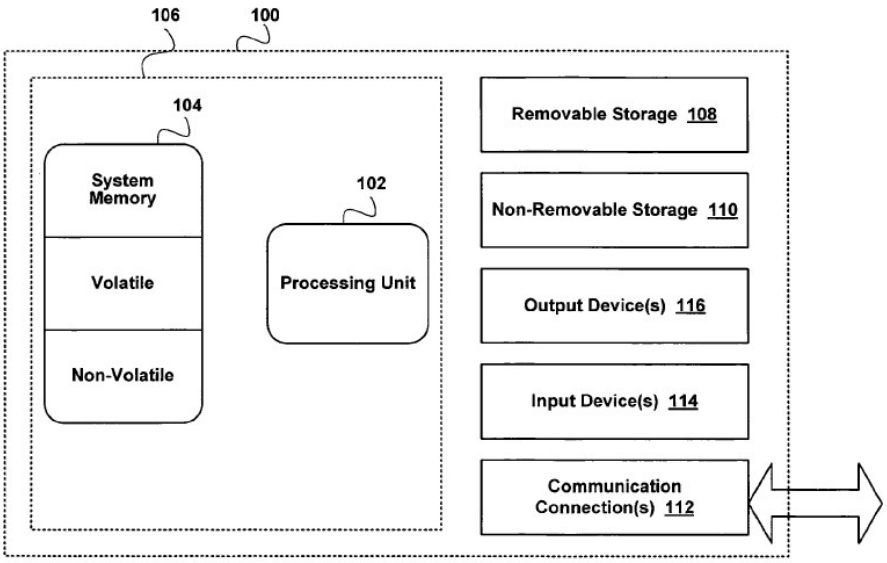

FIG. 1

Fig. 2 diagrams system 200 (e.g., a multi-computer system) having a number of compute nodes 220a-n coupled to a first storage unit 240 and a corresponding second storage unit 250a-n through a corresponding union block device ("UBD") 230a-n. '844 Patent, 5:12-22. To the compute nodes 220a-n, it appears that they have access to their own version of the application environment. However, a separate boot image is not created and stored for each node. *Id.* 5:22-2.

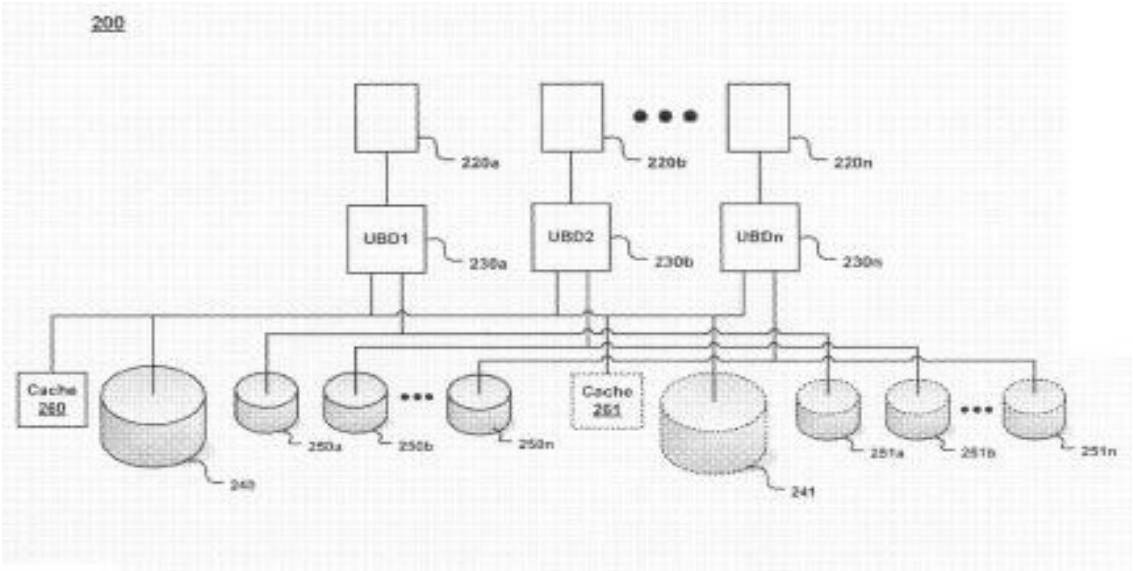

FIG. 2

Instead, a first storage unit 240 stores blocks of the root image. The root image contains data initially common to the compute nodes 220a-n, and is not changed by them. *Id.* 5:27-32. Each compute node 220a-n also has access to a corresponding second storage unit 250a-n for storing a leaf image, which in the challenged claims includes "only additional data blocks not previously contained in said root image and changes made by respective compute nodes to the blocks of [said/the] root image…" or similar language. *Id.* 5:33-34, 10:61-65, 11:32-35, 12:4-8, 12:47-50. The first storage unit 240 and second storage units 250a-n may each be contained on separate physical storage devices, on separate logical spaces on the same storage device, or any combination thereof. *Id.* 5:34-38.

A compute node 220a-n mounts its instantiation of the application environment via its respective UBD 230a-n which, in one embodiment, are "effectively low level drivers that operate as an interface between the first and second storage devices and the file system of each compute node 220a-n." *Id.* 5:59-64. UBDs 230a-n determine what "leaf image" (from the appropriate second storage unit 250) is needed for portions of the image that their respective compute nodes 220a-n have changed, and locate the portions of the image not changed by their respective node (which may reside in the root image or intermediate images comprising versions of the root image, not depicted in Fig. 2). '844 Patent, 6:4-13. UBDs 230a-n also create a new leaf image on a respective second storage unit 250a-n when their respective compute nodes 220a-n make changes to their instantiations of the image (and may also modify the leaf image in response to their respective compute node's access to its instance of the image). *Id.* 6:13-22.

The blocks of the root image, leaf image, and cache (discussed below) are merged "on the fly" to create the node's image. *Id.* 8:13-15. From the node's perspective, the created image appears as one cohesive image even though a separate and complete image is not actually stored

for the node. *Id.* 8:18-55. This saves space without significantly impacting load times. *See id.* 2:51-57.

The ’844 patent also claims to further improve speed by caching portions of the root image in a cache 260 (as several nodes in a cluster may often access the same root image data). ‘844 Patent, 2:59-61, 6:38-43. This may shorten times to load blocks by as much as 90%. *Id.* 6:43-46. Because cache capacity is typically limited, older data can be removed (as the amount approaches a threshold) to make way for new data by techniques “known in the art.” *Id.* 7:1-16.

The ’844 Patent also provides an “added benefit” by which one compute node can index the contents of the (shared) root image and provide the results to the other compute nodes (e.g., by storing results on a shared storage unit or providing the results directly). *Id.* 7:23-31.

B. Overview of the ’722 Patent

The ’722 Patent “pertains ... to transferring information for remotely updating content at client devices through the digital networks.” ’722 Patent, 1:24-27. For example, claim 14 recites:

14. A method comprising:

providing, using a processing device of an input source, a data representation to a client device, different from the input source, coupled to a routing network, wherein the data representation includes at least one live object recognizable by the client device, and causing the client device to respond to the live object of the data representation by determining an object identifier (ID) of the live object and to register for updates of the live object with the routing network, such that registering the client device with the routing network provides client connection information to a node in the routing network; and

sending, using the processing device of the input source, an update message to the routing network, wherein the update message identifies the live object and contains update data that updates a property of the live object,

wherein a gateway device at the routing network is configured to identify a category of the update message based on the input source, to determine a node type to which the identified category maps, and to route the update message to the node, having the node type, at the routing network,

wherein the node is configured to identify the client device as a registered device and to route the update message to the client device, and

wherein the client device processes the update message upon receipt to update the property of the live object at the client device.

Fig. 1 (annotated below) illustrates the input source (e.g., dynamic content provider 116, information provider 108, server 112 alone or combined), client device 114 (e.g., PC, phone, PDA, web-browsing appliance, other devices), routing network 110, and registry 125 identifying clients who have registered for live objects, and a “web page” (which can be any text, data, and/or

programs) to clients 114 over communication links 117 (e.g., network, Internet). *Id.* at 4:11-12, 4:55-5:9, 6:19-30, 6:53-60, 10:14-23. A few servers and clients are shown in Fig. 1, but there could be thousands or even millions. '722 Patent, 4:60-63.

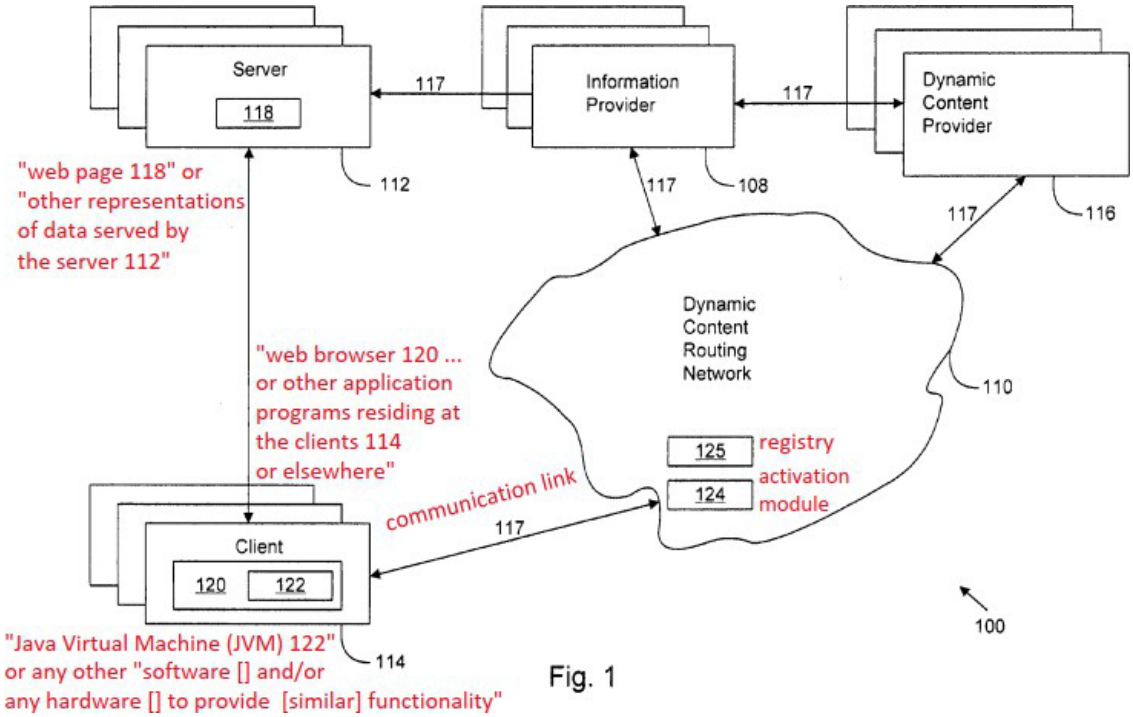

Fig. 1

The "routing network [] routes messages [from the input source (e.g., information/content provider or its server)] containing data for updating properties of live objects to clients displaying web pages or other representations of data." *Id.* at 3:9- 12, 6:22-29; *see also* 11:21-43, 12:24-25, Figs. 2, 3. "The web server that initially provides the web pages to the clients does not need to track which clients are currently displaying the live objects. Instead, the ... input source [] ... simply sends an update message to the routing network" and "the update messages are provided to the clients only when the live object changes." *Id.* at 3:12-18. The "'live objects,' which are designated to be real-time dynamically-updateable objects[, are] identified by an object identifier, or object ID." 5:28-31. The "objectID [] is preferably a string. The string can encode any information ... [and

can be] a simple textual and/or numeric identifier" (e.g., "Bang$" for the stock symbol "BANG"). *Id.* at 8:34-37, 8:62-65.

"The clients 114 contact the routing network 110 and register for update messages for the objectIDs [of the live objects] on the web page[/'other application programs residing at the clients 114 or elsewhere']. The routing network 110, in turn, preferably maintains a registry indicating which clients have registered 35 for which object IDs." '722 Patent, 5:32-36, 6:58-59. Input sources send update messages "any time the[y] want[] to update a property of a live object. Each update message preferably identifies a live object [by object ID] and contains data for updating a property of the identified live object. The routing network 110 accesses the registry and determines which clients have registered for the identified object. Then, the routing network 110 routes the update message to the appropriate clients. Upon receipt of an update message, the clients 114 update the specified property of the live object." *Id.* at 5:41-48, 9:59-62. The "property" to update "include[s] any modifiable data related to the [live] object or referenced with respect to the object" (e.g., updates to "stock prices and/or sports scores" or any other data at the client which "may be a simple numerical or textual value, e.g., '4'"). *Id.* at 7:23-24, 8:57-63, 9:53-56. Fig. 4 shows two differently-formatted webpages 410, 412 with the same "scores object 416" set to the score of the game "42" to "7." *Id.* at 12:37-46, 13:3-18.

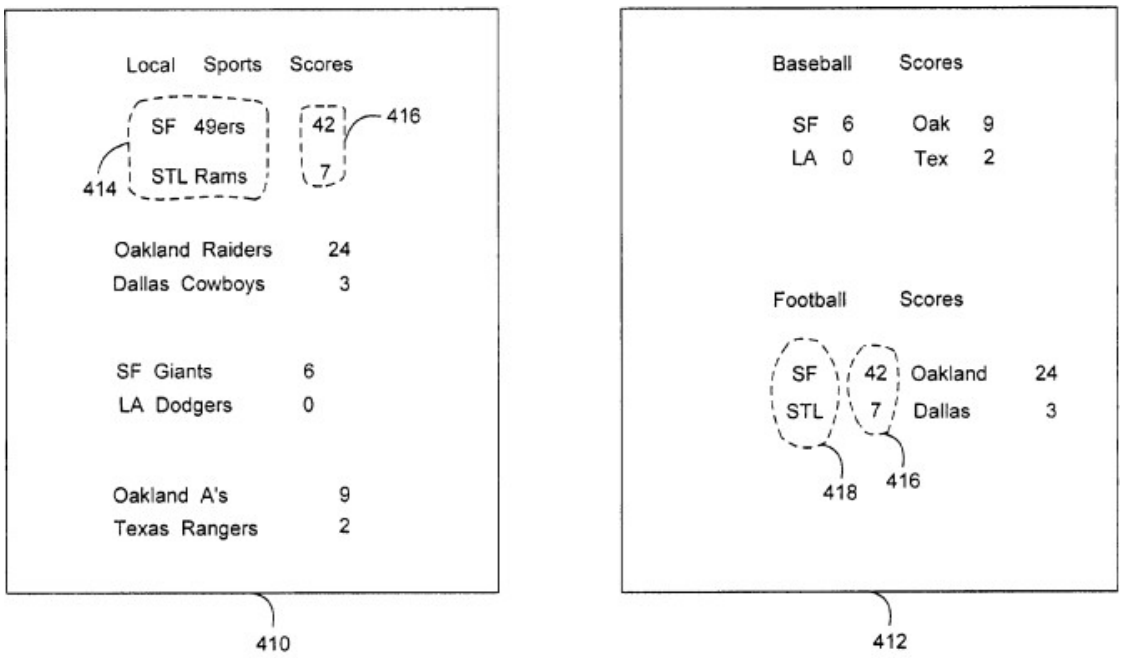

Fig. 4

"[T]o update the score of ... the game on both web pages, the input source 210 simply sends an update message to the routing network 110 specifying the objectID for the scores object 416 and the update to the score property. The routing network 110 routes the update message to the appropriate clients 114, and the clients update the appropriate score regardless of the particular page layout." *Id.* at 13:18-25.

"The routing network is adapted to selectively send messages to the nodes in the network" via a gateway. '722 Patent, 3:21-27. In an embodiment, updates "from an input source are assigned to one or more of N categories" and "the nodes are assigned to one or more of M types, and mappings are created between message categories and node types. Each gateway keeps track of these mappings" (e.g., category 1 data sent to type 1 nodes). *Id.* at 3:39-46; *see also* 18:24-51, Fig. 9. One way the '722 patent teaches assigning messages to categories "is to assign all message from a given input source [(e.g., information/content provider or its server] into a certain category." *Id.* at 18:52-53, 6:22-29. "When a gateway receives messages from input sources, the gateway

identifies the categories of the messages and routes the messages to the nodes of the types to which the categories are mapped," and the nodes send the update messages to registered client devices. *Id.* at 3:43-46, 18:66-19:5.

C. Overview of the '785 Patent

The '785 patent claims a "virtual network manager [or system]" that includes several components: (1) a computing device or "network interface configured for data communication," (2) a "register module configured to register devices in a virtual network," (3) a router or route director, and (4) a "DNS server configured to receive a DNS request" from a first (source) device and return three addresses to the source, including "[(i)] a network address associated with a network route director, [(ii)] a private network address associated with a second [destination] device in the virtual network, and [(iii)] a virtual network address associated with the second [destination] device." '785 Patent, 36:37-56 (claim 30).

Representative claim 30 is below:

> [30.0] A virtual network manager, comprising:
>
> [30.1] a network interface configured for data communication via a virtual network that is defined by a domain name having an associated public network address;
>
> [30.2] a memory and a processor to implement a register module configured to register devices in a virtual network, the register module further configured to:
>
> [30.3] receive a registration request from an agent associated with a device;
>
> [30.4] distribute a virtual network address to the device when the device is registered in the virtual network, the device being identified to other devices in the virtual network by the virtual network address; and
>
> [30.5] a DNS server for the virtual network, the DNS server

> configured to receive a DNS request from a first device in the virtual network, and return a network address associated with a network route director, a private network address associated with a second device in the virtual network, and a virtual network address associated with the second device.

The ’785 patent identifies the so-called IP address depletion problem as a challenge it was trying to solve to “enable the rapid creation of secure means that allows local and remote specified entities [computer devices] to communicate and collaborate from any location via a standard Internet connection.” ’785 Patent, 1:32-37. The ’785 patent indicates that, due to its own popularity, the Internet is “running out of [IP] addresses” that can be assigned to each device, thereby limiting the ability for devices in private networks, for example, to communicate or be accessible via the Internet. *Id.* at 1:50-55. The ’785 patent also purports to address the “mobility problem,” involving devices being assigned constantly changing/dynamic IP addresses, which other devices on the Internet wishing to communicate with them might find difficult to track. *Id.* at 5:10-45. The ’785 patent thus describes “a need for a system that provides for local and remote entities to communicate and collaborate using the Internet, [a system that] can work with existing NAT [(Network Address Translation)] devices and firewalls, and allows for devices to move to different physical networks.” *Id.* at 2:45-48.

In the “Description of the Related Art” section, the ’785 patent admits that NAT solutions where well known the art, and used to transparently translated between private and public IP address:

> One popular solution to the depleting address problem is [NAT]. This concept includes predefining a number of network addresses to be private addresses and public addresses. Public addresses are unique addresses that should only be used by one entity having access to the Internet. That is, no two entities on the Internet

> should have the same public address. Private addresses are not unique and are typically used for entities not having direct access to the Internet. Private addresses are used in private networks. Private addresses can be used by more than one organization or network. NAT assumes that all of the machines on a network will not need to access the Internet at all times. Therefore, there is no need for each machine to have a public address. A local network can function with a small number of one or more public addresses assigned to a NAT device. The remainder of the machines on the network will be assigned private addresses. Since entities on the network have private addresses, the network is considered to be a private network.

'785 Patent, 1:56-2:7.

One embodiment discloses a "secure Virtual Community Network or ('VCN')," described as "a private dynamic network which acts a private LAN for computing devices coupled to public networks or private networks." '785 Patent, 8:66- 9:5.

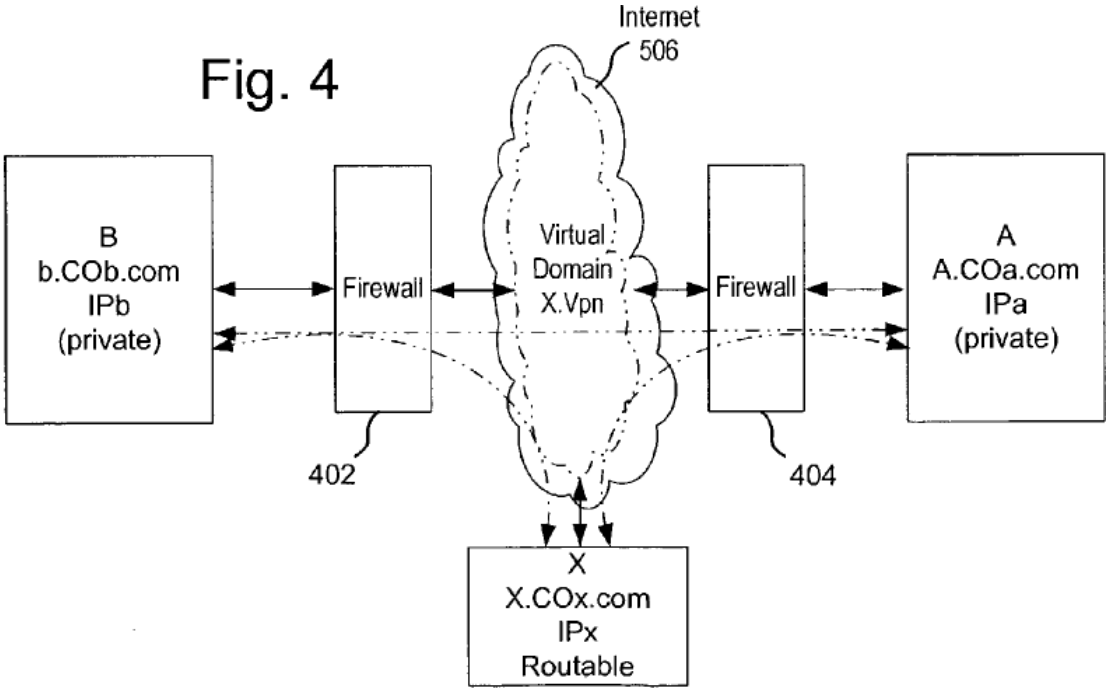

Figure 4 shows an exemplary VCN, which comprises a "computer or device B (host name—b.Cob.com) in a first private domain and computer or device A (host name—a.Coa.com) in a second private domain, both of which are coupled to the Internet by firewall devices 402, 404." *Id.* at 9:9-13. The firewall devices are NAT devices. *Id.* at 9:13-15. Moreover, "[c]omputer or device X is coupled directly to the Internet and has a public IP address." *Id.* at 9:16-17. "Devices A, B, and X can join the VCN, leave the VCN, or allows other devices in the VCN to communicate with them." *Id.* at 9:18-23. "All members of the VCN are accessible as if they were part of a physical local network" (e.g. all in the same private network)—allowing direct communication between devices within the virtual domain. *Id.* at 9:22-27.

The '785 patent states that "hardware architecture for the machines, servers, or other devices used to implement the present invention should be well understood to one of ordinary skill in the art," and outlines standard, readily available hardware/software components, including "one or more processors, a memory, a mass storage device, a portable storage device, a first network interface, a second network interface, and I/O devices, in communication with each other." '785 Patent, 9:42-48; *see id.* 9:48-54. The patent also states the network interface can include or be connected to a firewall. *Id.* at 9:57-60. The network interfaces are inside a computer, and when the computer also functions as a "router," it "includes two or more network interfaces;" *h*owever, "in other embodiments, the computer may include only one network interface." *Id.* at 9:54-56.

Another example of the system is illustrated in Figure 5A.

Fig. 5a

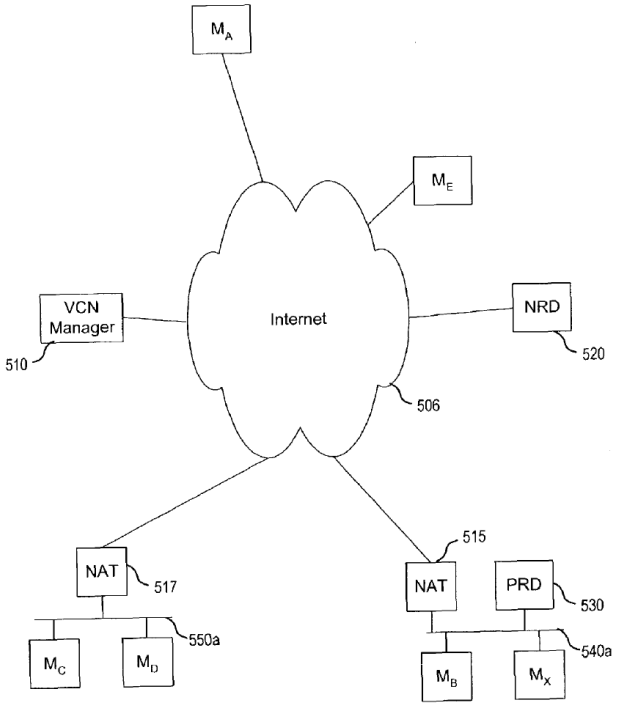

The VCN includes a VCN Manager 510, a Network Route Director 520 and/or Private Route Director 530, and a number of user devices (e.g., M_C, M_X, M_A etc.). .EX 1001, 10:24-27. "The VCN Manager 510 is a central server or server cluster providing management, connection, and security services for the VCN." ' 785 Patent, 10:66-11:1. The "various user machines, Mn, are coupled to the Internet 506, as well as other devices." '785 Patent, 10:17-20. "In order to establish or participate in communication within the VCN, a device must register with and join the VCN, thereby becoming a member." To join, "[t]he Agent will send a message to the VCN Manager 510 and receive a virtual IP address in return." *Id.* at 14:10-15. This is shown in step 650 of Figure 7. *Id.*

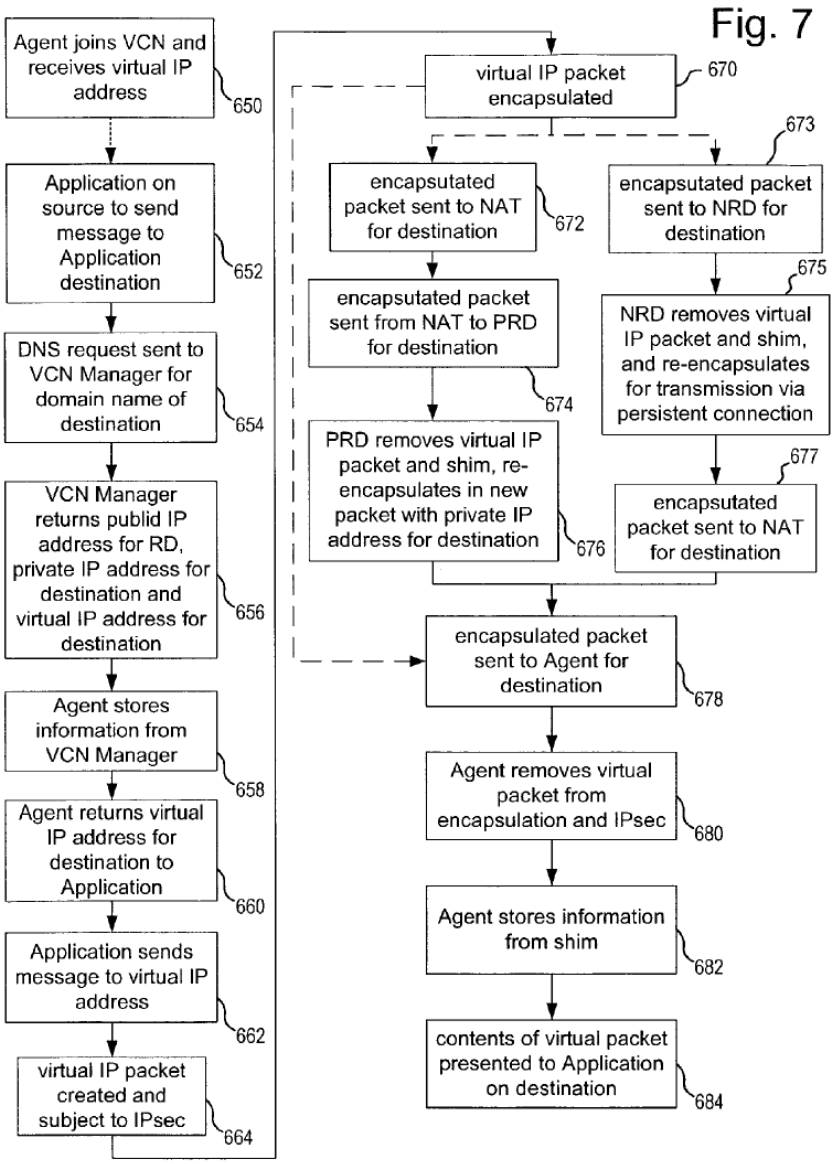

The ’785 patent describes the virtual IP or network address as preferably another private network address that is chosen in a well-defined set of addresses (virtual address realm) such that each virtual network address occurs only once across the virtual network and thus is a unique identifier of the device within the network address. *Id.* at 12:50-54 (“each member is assigned a virtual IP address unique in the context of the virtual community and that will not conflict with any local addresses on its LAN or any public addresses on the Internet.”); *Id.* at 12:48-50 (“In general, when choosing virtual addresses it is best to choose addresses that will not be routable to

the member."). To that end, the '785 patent describes this virtual network address in broad terms, adding that it can be a string, or an address compliant with either IPv4 or IPv6 standards. *Id.* at 12:40-44 ("Assigning a virtual address to each peer designated by a DNS string solves the problem of ambiguous endpoints ...These virtual addresses may be any legal IPv4 addresses.") As shown in Figure 7, a new member device wanting to send a message to another device in the VCN "will initiate a DNS request," which is then sent to the VCN Manager 510, as shown in step 654. *Id.* at 14:32-34. In response, the "VCN Manager 510 returns the public address of the Route Director for the destination, the private address for the destination device, and a virtual IP address for the destination device," as shown in Step 656. *Id.* at 14:34-38.[2]

This information is then stored in a table, or any other data structure" for creating a virtual IP packet to be forwarded to the destination address. '785 Patent, 14:48-15:15. When the destination wishes to respond to the source, or the sources wishes to send additional information, the process of Figure 7 can be repeated, although the steps of performing the DNS request do not need to be performed again, since the information between the two devices has already been stored by the devices. *Id.* at 15:58-67.

D. Overview of the '326 Patent

The '326 Patent concerns "a system and method for high data rate multi-channel wireless communications" which reuses "existing single channel radio designs" to "achieve very high data rate expanded bandwidth (wide band) WLAN operations." *See* Dkt#1 ¶ 15. Particularly, the '326 patent seeks to provide "[a] method for increasing data rates and data throughput in a network" by "partially filling the frequency gap between the first channel and the second channel by adding

[2] The 785 specification notes that the three addresses are not always returned, for instance, in the case where "the destination machine has a public address (and, thus does not use a routing director) then step 656 will only include returning the public IP address for the destination." '785 Patent, 14:40-44.

one or more data subcarriers into the frequency gap such that the one or more guard bands are at least partially filled with at least some of the one or more data subcarriers," "combining the first channel and the second channel using channel bonding with orthogonal frequency division multiplexing," and "transmitting data subcarriers occupying the first channel, the second channel, and the frequency gap in parallel to a receiver." *Id.* at 1:1-24. The patent contemplates "a way to achieve very high data rate expanded bandwidth (wide band) WLAN operations reusing existing single channel radio designs" that "provides a dual-channel form of operation for greater flexibility and performance across multiple platforms." Dkt#1-4 at 7:59-63. *See* Figure 4 of the '326 Patent below:

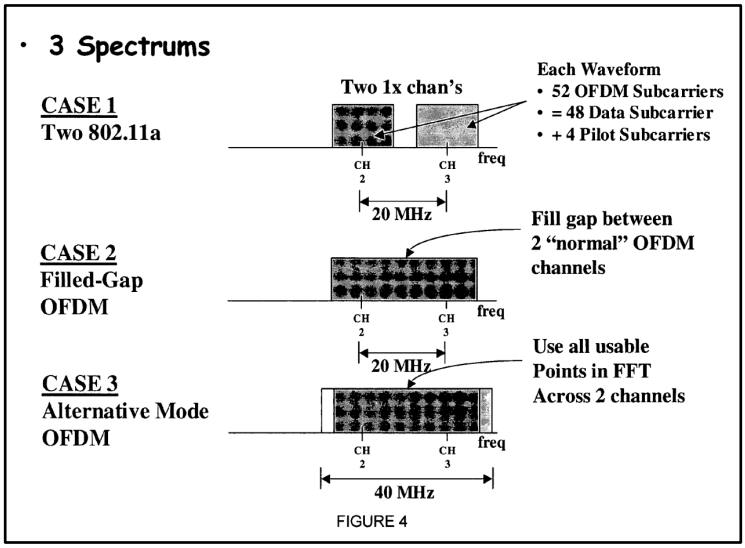

FIGURE 4

E. Overview of the '469 Patent

The '469 Patent concerns installing a satellite distributed Internet hotspot in a "remote location" or "rural area" that "experience[s] high volume transient traffic, such as rest area, restaurants, truck stops, rural hotels, conference centers, motels and state park lodges." '469 Patent at Abstract, 3:52-55. The specification and claims recite placing a "satellite dish 14 for communicating with the satellite, a subscriber access unit 16 operatively coupled to the satellite

dish 14 and a router 18 operatively coupled to the subscriber access unit"—"at the rural location," meaning "anywhere there is 120 volt electricity available or access to the sun for a solar panel and enough space to house the transceiver and mount a satellite dish." *Id*. at 1:39-41, 4:21-25, 4:18-28.

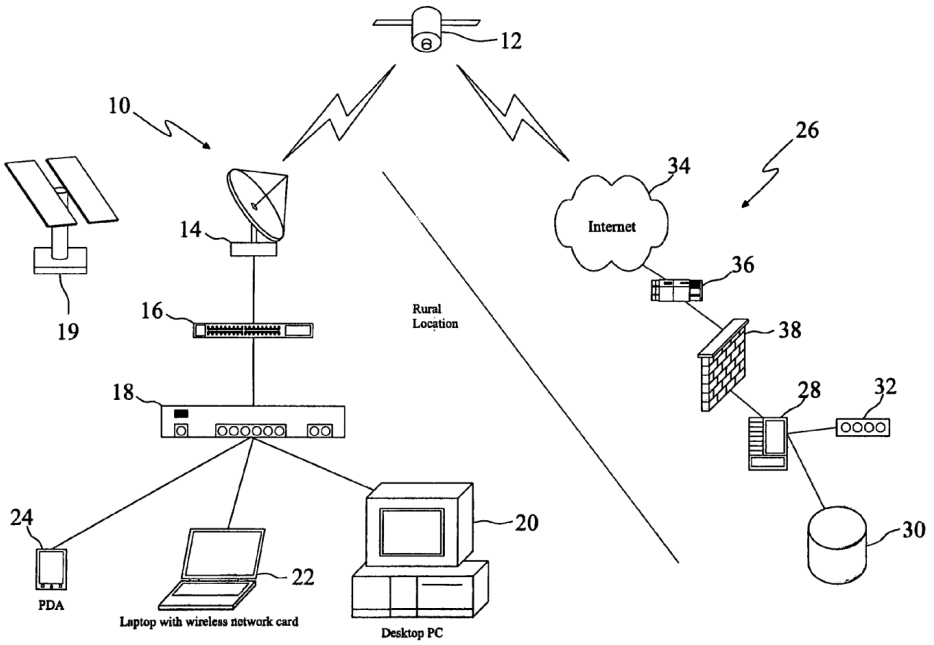

FIG.1

As shown in Figure 1 of the '469 Patent, the invention contemplates connection to the hotspot by "user web-enabled devices, such as PC 20, laptop computer 22 and PDA 24" (*id.* at 4:29-30), upon which

> they are routed through the 'Subscriber Access Unit.' This unit, utilizing radius client, automatically forces the user to first logon via satellite through a third party commercial site that houses the radius server. Internet access is granted upon activation of a valid credit card, or existing valid account.

'469 Patent at 4:2-7; *id.* at 4:32-34 ("The user can access the Hotspot using his own web-ready device to acquire a dynamic IP address").

F. Overview of the ’582 Patent

The ’582 Patent relates to load balancing using multiple computer processors. ’582 Patent, 1:14-17. Particularly, ’582 Patent deals with “a way to split the performance of a given task among a plurality of processing units which can all access, directly or indirectly, the input data and the devices on which the output data is to be stored.” *Id.* Further, “[t]he principal object of the present invention is to enable the decomposition of a certain type of linear processes that currently use a single computer, into equivalent parallel processes that can efficiently use any number of potentially heterogeneous computers, taking the available capacity of each of these computers into account while optimizing execution.” *Id*. at 1:48-54. See FIG. 1 of the ’582 Patent, below.

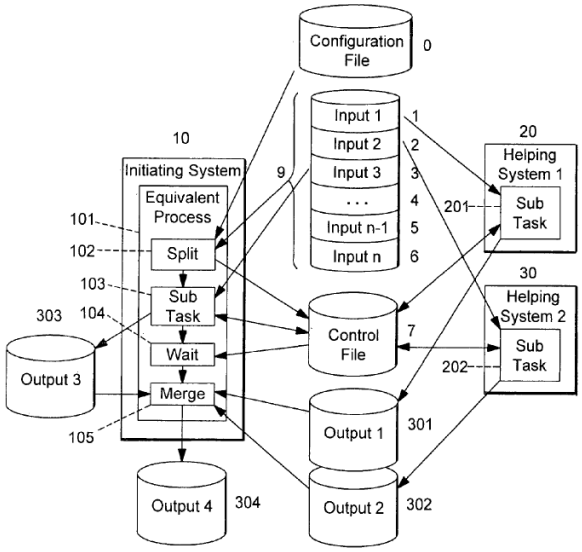

Fig. 1

* * *

Each of the concepts discussed above, as well as many others, were widely known by the alleged invention dates of the Asserted Patents. Accordingly, the Asserted Patents are nothing

more than a recitation of knowledge that was well-known in the industry, and are, at best, a recitation of well-known features and functionalities that took no more than an ordinary level of skill in the art to arrange in a known manner using conventional techniques.

G. Overview of the ’080 Patent

The ’080 Patent is directed to parallel distributed computing. ’080 Patent, Abstract, 1:11–15. As described, the patent concerns distributed computing programs that “operate across multiple processors/nodes and multiple memories” through the use of “at least one distributed shared variable located across the multiple memories and one or more distributed programs configured to operate across multiple processors,” together with “one or more self-migrating threads configured to migrate from one processor to another.” *Id.* at 2:8–19.

The patent further discloses a method of converting a distributed sequential computing (DSC) program into a distributed parallel computing (DPC) program by “utilizing parallelization and pipeline opportunities in the sequential computation.” *Id.* at 7:36–40. According to the patent, this approach allows an originally sequential program to be transformed into one capable of execution across multiple processors in parallel.

FIGS. 3(a) and 3(b), shown below, illustrate a program conversion process.

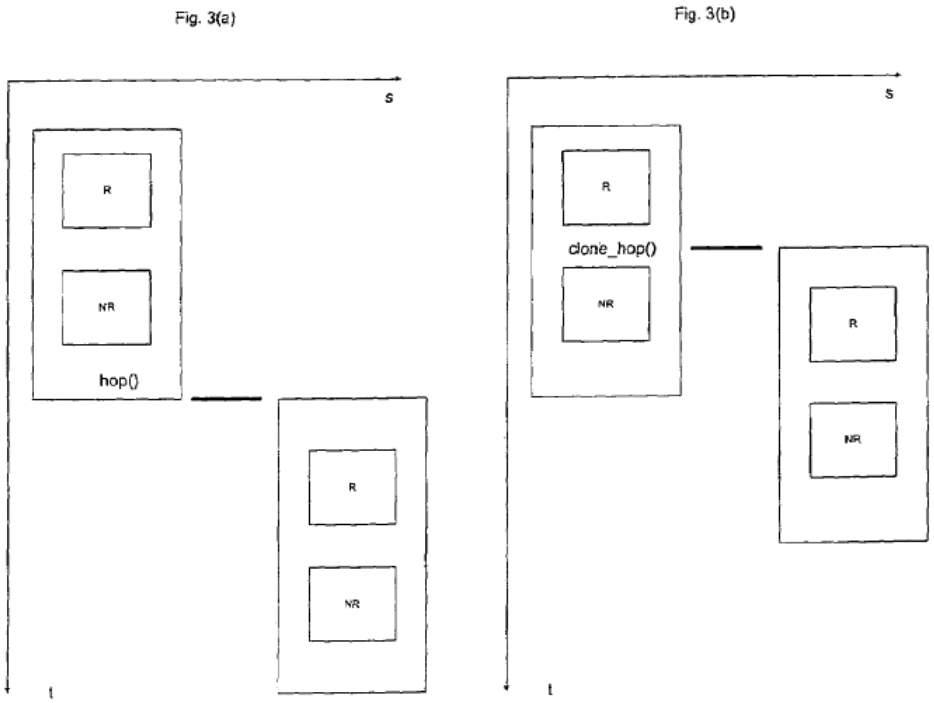

In Figure 3(a), once a computation of R is completed, a thread clones itself and migrates to a different node, carrying an intermediate result. In Figure 3(b), the cloned thread continues the next computation on the new node, while the original thread continues computing NR on the initial node. *Id.* at 7:53–65.

The patent describes that this conversion may be achieved using a mobile agent system to implement navigational programming. *Id.* at 8:20–26. The purported advantage of this approach is that threads are able to move between processors while carrying state, thereby enabling a degree of parallelization without requiring extensive manual restructuring of programs.

H. Overview of the ’282 Patent

The ’282 Patent describes clustered computing involving multiple compute nodes with Operating System (“OS”) software image management, where nodes are activated by diskless booting protocols or remote software installation to local storage, and where a boot image is

required for each node in the cluster – and states that storing a boot image for each server results in wasted storage, and copying the entire master image at boot results in long boot times. ’282 Patent, 1:21-57. The Background discusses branching-store file systems where a read-only “root” image is accessible by all nodes, and changes made by a node to the root image are stored in a “leaf” image unique to that node–a filter merges the leaf images with the root image to provide a cohesive instance of the application environment. ’282 Patent, 1:58-2:5.

Fig. 1 of the ’282 Patent diagrams a system 100 (e.g., “a multi-computer system, such as an HPC [high performance computing] cluster”) having a number of compute nodes 120a-n coupled to a first storage unit 140 and a corresponding second storage unit 150a-n through a corresponding union block device (“UBD”) 130a-n. ’282 Patent, 3:62-4:16. To the compute nodes 120a-n, it appears that they have access to their own version of the application environment. However, a separate boot image is not created and stored for each node. ’282 Patent, 4:6-10.

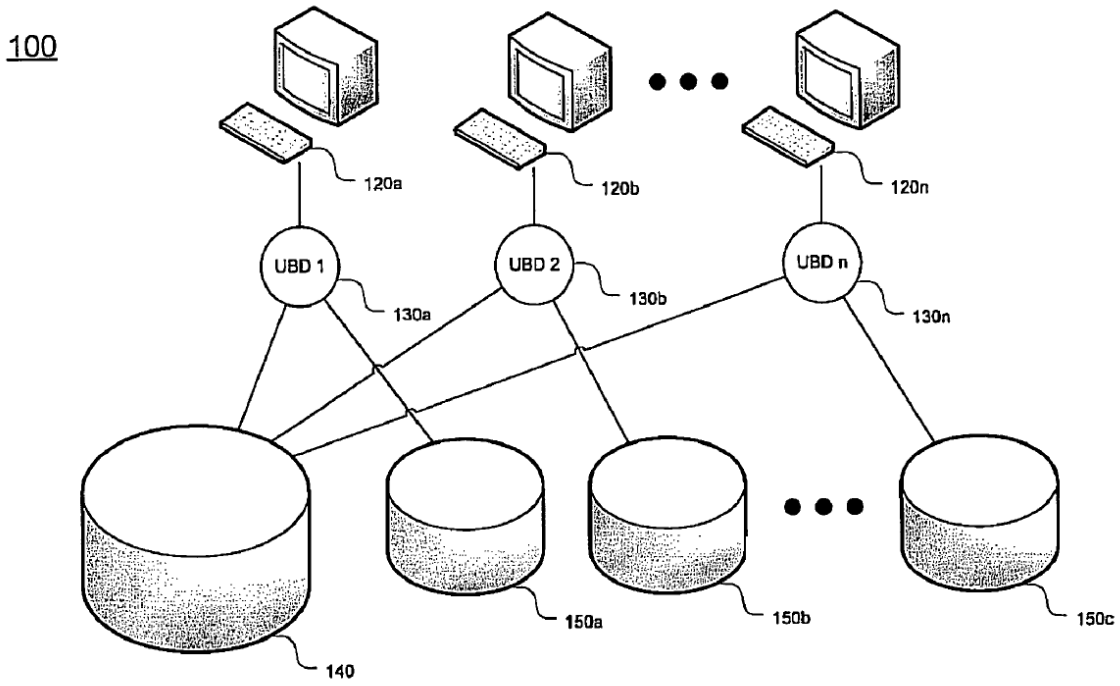

Figure 1

Instead, the first storage unit 140 stores blocks of the root image. The root image contains data initially common to the compute nodes 120a-n, and is not changed by them. ’282 Patent, 4:11-16. Each compute node 120a-n also has read-only access to a corresponding second storage unit 150a-n for storing a leaf image, which in the challenged claims includes “new data blocks and changes to the blocks of the root image…” or similar language. *Id.*, 4:14-18, 7:21-24, 8:12-15. The first storage unit 240 and second storage units 250a-n may each be contained on separate physical storage devices, on separate logical spaces on the same storage device, or any combination thereof. ’282 Patent, 4:18-22.

A compute node 120a-n mounts its instantiation of the application environment via its respective UBD 130a-n which, in one embodiment, are “effectively low level drivers that operate

as an interface between the first and second storage devices and the file system of each compute node 220a-n." *Id.*, 4:41-45. UBDs 130a-n determine what "leaf image" (from the appropriate second storage unit 250) is needed for portions of the image that their respective compute nodes 120a-n have changed, and locate the portions of the image not changed by their respective node (which may reside in the root image or intermediate images comprising versions of the root image, not depicted in Fig. 1). '282 Patent, 4:52-61.

UBDs 130a-n also create a new leaf image on a respective second storage unit 150a-n when their respective compute nodes 120a-n make changes to their instantiations of the image (and may also modify the leaf image in response to their respective compute node's access to its instance of the image). *Id.*, 4:61-5:3. For example, "upon receiving a write request from their respective compute nodes for a sector X, the UBDs 130a-n will create an appropriate persistent mapping for sector X and then write sector X onto their respective second storage units 150a-n, where sector X can then be modified." *Id.*, 5:3-8.

The blocks of the root image and leaf image are merged "on the fly" to create the node's image and saves space without significantly impacting load times. '282 Patent, 2:49-53, 6:8-16, 6:41-45, 6:56-59. From the node's perspective, the created image appears as one cohesive image even though a separate and complete image is not actually stored for the node. *Id.*, 6:10-13.

I. Overview of the '584 Patent

The '584 Patent "relates, in general, to ... hosting a set of computer clusters that are … configured or customized to suit a number of remote customers or client." '584 Patent, 1:15-20. A "cluster" is simply "two or more computing resources [used] to perform computing tasks" and "may include a computer or processors, network or communication links for transferring data among the grouped resources, data storage, and other devices to perform one or more assigned computing processes or tasks." '584 Patent, 1:22-29. Such "clusters may be configured for high

availability, for higher performance, or to suit other functional parameters" such as load balancing. '584 Patent, 1:31-31. "A load balancing cluster is a configuration in which a server sends small individual tasks to a cluster of additional servers when it is overloaded." '584 Patent, 2:20-22. A "high availability cluster is a configuration in which a first server watches a second server and if the second server fails, then the first server takes over the function of the second server." '584 Patent, 2:22-25. A high performance cluster (HPC) is "a set of computers [configured] to work together to solve a single [large] problem" that "is broken down into smaller independent tasks that are assigned to individual computers in the cluster allowing the large problem to be solved faster." '584 Patent, 2:22-25.

The '584 Patent describes the various "reasons why it is often undesirable for a company to own and maintain a cluster," particularly high performance clusters that "are difficult to setup, configure, and manage" and "also requires numerous resources for ongoing maintenance that increases the cost and manpower associated with cluster ownership." '584 Patent, 1:35-43. "Unfortunately, while the number of tasks and computing situations that would benefit from HPC clusters continues to rapidly grow, HPC clusters are not being widely adopted. In part, this is because HPC clusters require the most computers of any cluster type and, thus, cause the most problems with maintenance and management." '584 Patent, 2:12-17.

The '584 Patent specifically addresses the costs of ownership and operation for a multi-cluster ("multiple clusters [cooperating] to perform tasks") of any of the three described cluster types, in which "[t]he difficulties for managing clusters are amplified … because of their complexity. For example, if one … cluster consumes a set of resources, then multiple … clusters will, of course, consume a much larger set of resources and be even more expensive to maintain." '584 Patent, 2:26-33. "In all of these cases, the burden of managing, monitoring, and hosting the

cluster remains with the user of the cluster who owns the cluster who must maintain the cluster on their premises." '584 Patent, 2:47-51.

To alleviate those costs, the '584 Patent proposes "providing clusters to users or "clients" such as companies and other organizations that provide the computational assets or power that the clients demand while not presenting an unacceptable burden on the clients' resources." '584 Patent, 2:51-56. For that purpose, the '584 Patent introduces the term "private" in describing client-specific access to cluster resources within a multi-cluster system. For example, claim 1 recites:

1. A computer system, comprising:

a private communications network linked to a public communications network;

a first cluster comprising a set of computing resources, including at least one hardware processor, in a first configuration, wherein the first cluster is communicatively linked to the private communications network;

a second cluster comprising a set of computing resources, including at least one hardware processor, in a second configuration, wherein the second cluster is communicatively linked to the private communications network; and

a monitoring system to monitor operations of the first cluster and the second cluster for communications problems;

wherein the first configuration differs from the second configuration;

wherein the first configuration provides a first computing environment to perform a first client task and the second configuration provides a second computing environment to perform a second client task; and

wherein the computing resources comprise processing nodes, data storage shared by the processing nodes, and at least one communications network to link the processing nodes to each other and to the data storage;

wherein the first cluster establishes communications between the set of computing resources of the first cluster and a first gateway communicatively linked between the first cluster and the private communications network;

wherein the second cluster establishes communications among the set of computing resources of the second cluster and a second gateway communicatively linked between the second cluster and the private communications network;

wherein communications between the first cluster and the second cluster are isolated;

wherein the first cluster is a high performance cluster; and

wherein the second cluster is a high performance cluster.

Claim 1 recites a multi-cluster ("a first cluster comprising a set of computing resources" and "a second cluster comprising a set of computing resources") system of high performance clusters ("the first cluster is a high performance cluster" and "the second cluster is a high performance cluster") equipped with high availability cluster functionality ("a monitoring system to monitor operations of the first cluster and the second cluster for communications problems") and a "private" communications network ("the first cluster is communicatively linked to the private communications network" and "the second cluster is communicatively linked to the private communications network") that nonetheless "isolates" the clusters ("communications between the

first cluster and the second cluster are isolated") while simultaneously allowing remote access (via "a public communications network"). Claim 10 recites analogous features:

10. A computer system, comprising:
a firewall communicatively linked to a public network and a private network;
a first private cluster network comprising:
a first high performance computing (HPC) cluster comprising a set of computing resources comprising at least one processing device in a first configuration; and
a first gateway communicatively linked between the first HPC cluster and the private network;
a second private cluster network comprising:
a second HPC cluster comprising a set of computing resources in a second configuration; and
a second gateway communicatively linked between the second HPC cluster and the private network; and
a monitoring system to monitor operation of the first private cluster network and the second private cluster network;
wherein the first configuration differs from the second configuration;
wherein the first configuration provides a first computing environment to perform a first client task;
wherein the second configuration provides a second computing environment to perform a second client task;
wherein the firewall limits communications from a first client associated with the first client task to connections with the first cluster;
wherein the firewall limits communications from a second client associated with the second client task to connections with the second cluster; and
wherein communications between the first HPC cluster and the second HPC cluster are isolated.

Claim 10 additional recites a firewall between the public and private communications networks ("a firewall communicatively linked to a public network and a private network" that "limits communications from a first client … to connections with the first cluster" and "limits communications from a second client … to connections with the second cluster") and gateways or routers between the clusters and the private communications network ("a first gateway communicatively linked between the first HPC cluster and the private network" and "a second gateway communicatively linked between the second HPC cluster and the private network").

In general, the '584 Patent purports to address issues with managing clusters, particularly multiple clusters, and identifies a need for systems and methods for providing cluster processing capabilities to users while reducing the cost and operating management burden on the companies for which such users work. See, e.g., '584 Patent at 2:12-60. The '584 Patent discloses methods and systems for hosting multiple clusters, each of which is configured for a customer, and providing users with remote control over individual cluster configuration, access control, and monitoring of the cluster. *Id.*, 2:64-3:10.

Fig. 2 (annotated below) illustrates one configuration disclosed in the '584 Patent for the features of Claims 1 and 10:

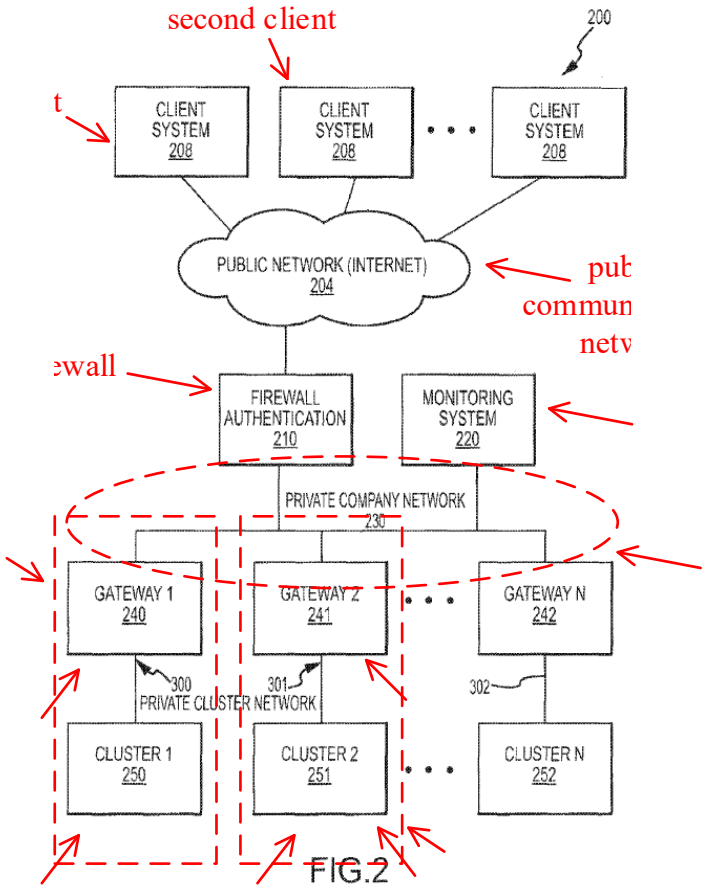

System 200 includes a public network 204 connected to a firewall and authentication system 210. *Id.*, Fig. 2, 5:15-19. The firewall and authentication system 210 links the public network 204 to a private network 230. *Id.*, Fig. 2, 5:22-36. The '584 Patent describes three methods for limiting users to certain clusters using the firewall. In the first method, the firewall 210 limits clients to a specific cluster based on the public address of the cluster. *Id.*, 6:6-9. In the second method, the firewall 210 limits clients to a specific cluster based on the TCP/IP port on the firewall to which the client connects. *Id.*, 6:14-18. In the third method, the firewall 210 limits clients to clusters based on a user's authenticated credentials. *Id.*, 6:21-27.

The client systems 208 communicate via the Internet 204 and firewall 210 to a private network 230, to which a first private cluster network 300 and a second private cluster network 301 respectively comprising gateway 1 240 and cluster 1 250 and gateway 2 241 and cluster 2 251 also communicate, together with monitoring system 220. Since only a single private company network 230 is illustrated, Fig. 2 apparently depicts the structure of a multi-cluster system dedicated to a single customer—that is, a separate implementation of the structure of Fig. 2 would be required for another customer, as opposed to multiple customers each receiving services from clusters 250, 251, and 252.

Monitoring system 220 is connected to the private network 230 and monitors all the clusters 250, 251, and 252. *Id.*, Fig. 2, 5:29-32. Each gateway ("router") 240, 241, and 242 links the private network 230 to each of private networks 300, 301, and 302, respectively, and clusters 250, 251, and 252, respectively. *Id.*, Fig. 2, 5:32-36.

Fig. 3A illustrates an embodiment of a cluster "configured to provide customization to suit a particular task or computing application":

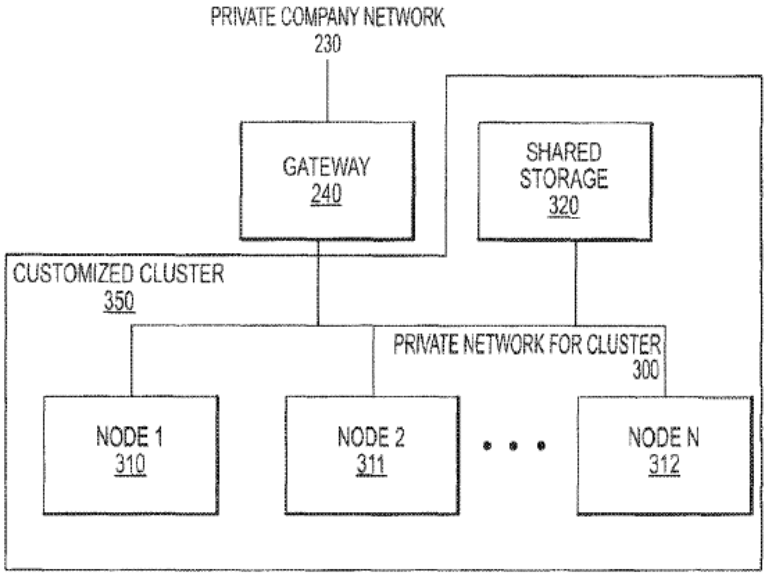

FIG.3A

Id., Fig. 3A, 3:64-67, 7:19-28. Fig. 3A is "[o]ne possible common configuration" of "customized cluster 350." *Id.*, 7:19-22. The cluster includes nodes 310, 311, and 312 and shared storage 320 connected by a single private network 300. *Id.*, 7:22-28.

J. Overview of the '000 Patent

The '000 Patent relates to a communications network in which a user equipment (UE), in a time interval that it is not sending information over a physical uplink shared channel, sends an uplink physical signal based on received resource allocation information. '000 Patent, Abstract. The uplink physical signal is used to determine channel conditions by a base station, and the UE receives, on a downlink control channel, control information that is based on the determined channel conditions. *Id.* The '000 Patent discusses using a physical layer common control channel (PLCCH) to form a feedback system, and a dedicated timeslot groups all of the UL_Beacon signals

from multiple UEs in a specific uplink timeslot. *Id.* at 2:43-55. FIG. 2 illustrates the timeslot arrangement as described in the ’000 Patent.

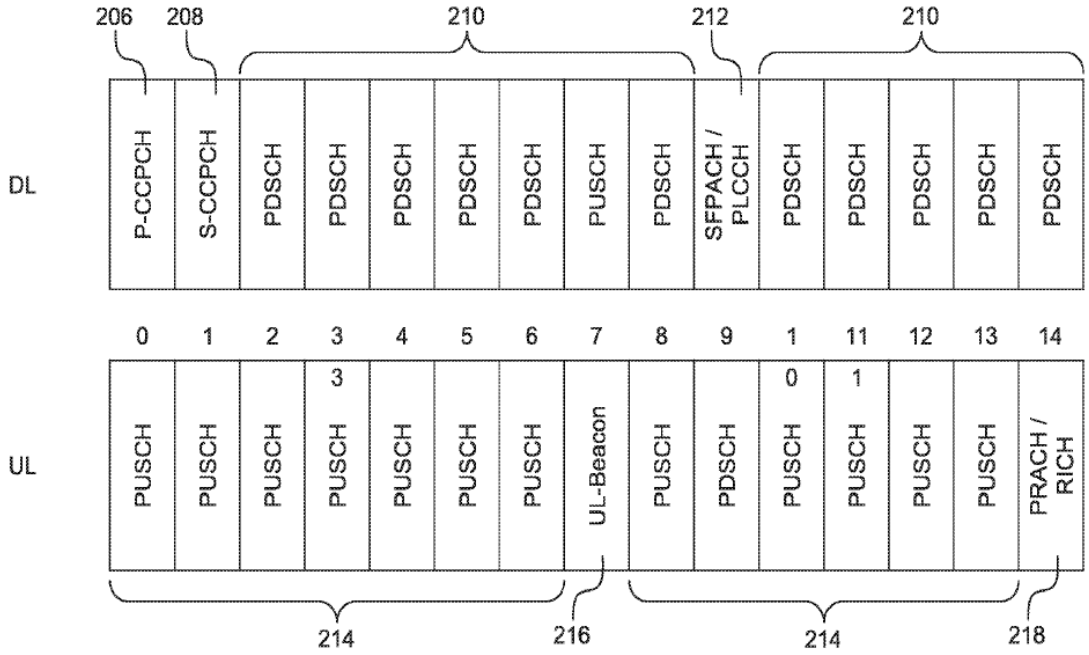

FIG. 2

The PLCCH 212 shares a timeslot with another downlink shared channel, the downlink frame also comprises a downlink beacon timeslot 206, an access control timeslot 208, and normal traffic carrying timeslots 210, and the uplink frame comprises a UL_Beacon control timeslot 216, an access control timeslot 218, and normal traffic carrying timeslots 214. *Id.* at 5:62-6:6.

III. GROUNDS OF INVALIDITY UNDER 35 U.S.C. § 101

Pursuant to the Court’s OGP, Southwest identifies the following Asserted Claims of the Asserted Patents as ineligible under 35 U.S.C. § 101. In addition to the specific discussions below, the specification and prosecution history for each asserted patent reflect statements and admissions concerning the state of the art at the time of the purported inventions, and the prior art charted and discussed in these contentions for purposes of invalidity under 35 U.S.C. § 103 is relevant for consideration regarding the state of the art at the time of the purported inventions.

A. U.S. Patent Nos. 8,332,844 and 7,721,282

1. State of the Art Relevant to the ’844 and ’282 Patents

By the earliest priority date of December 30, 2004, systems administrators and infrastructure engineers working in distributed computing environments had access to a range of well-understood, conventional technologies for provisioning and managing operating system images across multiple compute nodes. These technologies were not only theoretically described but actively implemented and in widespread use across educational institutions, research laboratories, enterprise networks, and government systems. Understanding this state of the art is critical to evaluating the Asserted Claims of the ’844 and ’282 Patents[3], as it establishes that the techniques described in the patents were already conventional, mature, and widely implemented in the relevant field.

Distributed system architectures at the time were designed to deliver consistent runtime environments to groups of machines—whether stateless thin clients, HPC nodes, or clustered servers—by employing shared root filesystems, overlay filesystems, and caching mechanisms. These established practices optimized storage, consistency, and performance and were actively documented and deployed in real-world systems.

a. Distributed Image Management in 2004

By December 2004, several foundational techniques in distributed image and storage management were widely recognized, well understood, and routinely implemented across both academic and commercial systems. These included the use of snapshots, copy-on-write (CoW) mechanisms, merging delta changes with base images, shared base images with writable overlays, and efficient virtual machine migration strategies.

[3] The ’844 and ’282 Patents in share a common specification lineage and focus on the concept of distributed application environments.

One of the most prevalent techniques was snapshotting using Copy-on-Write. Storage systems like NetApp's Write Anywhere File Layout (WAFL) architecture leveraged CoW to create space-efficient, consistent, point-in-time copies of file systems. WAFL enabled the creation of read-only snapshots and writable clones that separated static base data from dynamic changes without duplicating the entire file system. The concept was not limited to NetApp; as early as 1992, the Episode File System integrated snapshots and file versioning with CoW in distributed environments supported by the Distributed Computing Environment (DCE). In the virtualization space, VMware's early GSX and ESX platforms also relied on CoW to manage snapshots of virtual machines, tracking changes made after a snapshot was taken while preserving the original disk image.

Alongside snapshotting, it was routine to merge snapshots with base images to present a unified view of the file system or virtual machine state. For example, VMware systems combined base virtual disk images with delta files to construct a current VM state, a practice commonly used by system administrators by the early 2000s. Similarly, NetApp technologies described in patents such as U.S. Patent Nos. 5,819,292 and 6,604,118 disclosed mechanisms for merging base data with CoW-based snapshots to provide a consistent and current data view.

In networked and high-performance computing environments, the use of shared read-only base images with writable overlays was equally well established. Systems such as Sun Microsystems' diskless workstations and the Linux Terminal Server Project (LTSP) enabled multiple clients to boot from a single centralized read-only root image while maintaining isolated writable overlays. Academic and research environments employing Beowulf clusters or Rocks Cluster Toolkit adopted similar strategies, allowing efficient management of large numbers of

nodes while minimizing image duplication. NetApp further enabled writable clones of read-only snapshots, as disclosed in U.S. Patent 7,334,095.

The migration and management of virtual machines—including their associated image states and snapshots—was also well understood by 2004. Research by Sapuntzakis *et al.* at Stanford University demonstrated the migration of virtual machines using CoW disks and demand paging to efficiently capture and transfer VM state across systems. These techniques mirrored the commercial practices already in use by companies like VMware and reflected broader industry familiarity with image management in virtualized environments.

b. Real-World Implementations Demonstrating the State of the Art

Several systems operational before or during 2004 embodied the above techniques, demonstrating that they were not only theoretically known but also widely implemented and recognized in practice.

- NetApp's WAFL File System exemplified the state of the art with its CoW-based snapshot architecture. WAFL enabled the creation of read-only snapshots, writable clones, and consistent file system views without duplicating the base image. This architecture was thoroughly documented in both U.S. Patents 5,819,292 and 7,334,095, as well as in technical literature such as "File System Design for an NFS File Server Appliance" by Dave Hitz et al.
- VMware's GSX and ESX server platforms provided commercial-grade virtual machine management, including snapshotting, delta image tracking, and the merging of these deltas with base images. This allowed users to roll back or move between states while minimizing disk usage.

- Sun Microsystems' diskless workstations leveraged centralized read-only images to boot multiple clients across a network, each maintaining private writable layers. These overlays captured client-specific changes while preserving the shared base image intact.
- The Episode File System, developed in the early 1990s, brought snapshotting and version control to distributed file systems using CoW. This system efficiently tracked and stored changes to files across versions in a distributed environment.
- Petal, a distributed virtual disk project from HP Labs, provided dynamic, fault-tolerant storage with support for snapshot creation and management using CoW techniques. Petal's architecture demonstrated the application of distributed block storage principles in combination with image versioning and migration features.

Taken together, these examples show that by December 2004, the claimed techniques for managing images, snapshots, and overlays in distributed systems were neither novel nor inventive—they were standard practice in both the commercial and academic realms.

c. Conclusion:

By the earliest priority date of December 30, 2004, the concepts underlying the Asserted Claims of the '844 patent were well understood, routine, and conventional within the field of distributed system image management. The use of snapshots, CoW, merging base images with snapshots, and maintaining shared root images with per-client writable overlays were well documented, publicly available, and widely deployed.

These practices were integral to well-established systems such as NetApp WAFL, VMware virtualization environments, Sun Microsystems diskless workstations, and cluster management solutions. Because the techniques described by the Asserted Claims of the '844 Patent were

routinely implemented and broadly accepted by December 2004, the Asserted Claims of the ’844 patent are both conventional and rendered obvious by the state of the art.

2. The Asserted Claims of the ’844 and ’282 Patents Fail Under *Alice*

The ’282 Patent, titled *Block-Level I/O Subsystem for Distributed Computing Environment Management*, was filed first and describes a system in which read-only “root images” are merged with per-node “leaf images” using a “union block device” to deploy computing environments across multiple nodes. The ’844 Patent, titled *Root Image Caching and Indexing for Block-Level Distributed Application Management*, is a continuation-in-part of the ’282 Patent and extends the shared specification by introducing caching and indexing mechanisms to optimize the deployment of distributed environments.

Both patents depend on underlying techniques that were admittedly well-understood, routine, and conventional practices at the time of filing. For example, clustered computing and distributed file systems were established technologies. *See* ’282 Patent at 1:21–35; ’844 Patent at 1:31–45. Root-leaf storage methods were commonly used to create boot images “on the fly.” *See* ’282 Patent at 1:62–2:6; ’844 Patent at 2:14–25. And caching mechanisms, including least-recently-used (LRU) algorithms, were known in the art. *See* ’844 Patent at 6:38–7:17.

The ’282 Patent claims a system for organizing and storing information, with claim 1 charted as representative (Dkt#52-24). Claim 1 recites, in relevant part:

> 1. A system for distributing an application environment comprising:
> a compute node comprising a computer system;
> a first storage unit for storing blocks of **a root image** …;
> a second storage unit for storing **a leaf image** …; and
> a union block device for interfacing between the compute node and the first and second storage units … wherein **the union block device creates the application environment by merging** the blocks of the root image stored on the first storage unit with the blocks of the leaf image stored on the second storage unit ….

The ’844 Patent claims methods for organizing and storing information, with claim 7 charted as representative (Dkt#52-8). Claim 7 recites, in relevant part:

> 7. A method for providing data to a plurality of compute nodes, comprising:
>
> storing blocks of **a root image** of said compute nodes on a first storage unit;
>
> storing **leaf images** for respective compute nodes on respective second storage units…; and
>
> **caching blocks of said root image** that have been accessed by at least one of said compute nodes in a cache memory.

Both patents rely on generic computer hardware and software implementations, as shown in Figure 1 of each patent, which depict general-purpose computing devices with standard storage media. *See* ’282 Patent at 4:11–40; ’844 Patent at 4:27–56. Components such as “Union Block Devices” (UBDs) are described merely as low-level drivers without any disclosed novel functionality. *See* ’282 Patent at 4:41–45; ’844 Patent at 5:19–64. The claims are drafted in broad functional language—“providing,” “distributing,” “storing,” “interfacing,” and “caching”—without specifying any improved algorithms, hardware, or software. In sum, the claims reflect the conventional practice of storing one type of data (a “root image”) in a first location, storing another type of data (a “leaf image”) in a second location, and utilizing standard hardware and routine techniques to merge or cache the data.

The prosecution history of the ’282 Patent underscores the abstract nature of the claims. On July 8, 2009, the examiner rejected original claims 1–33 under § 101, explaining the system was “an abstract idea” that failed to disclose how it would “process and carry out its intended results.” *See* Dkt#55 at Ex. A at 4–5. The applicant overcame the rejection by amending the claims to recite generic hardware components, such as the “first storage unit,” “second storage unit,” and “union block device.” *See* Dkt#55 at Ex. B at 1. While the amendments satisfied the examiner’s objection at the time, modern § 101 precedent makes clear that merely adding conventional

hardware does not transform an abstract idea into a patent-eligible invention. *See, e.g., Alice*, 573 U.S. at 223–24.

Claim 1 of the ’282 Patent and claim 7 of the ’844 Patent both recite the abstract concept of organizing and storing information in a root-leaf structure: keeping a master “root image” shared across compute nodes, maintaining individualized “leaf images” for per-node changes, and (for the ’844 Patent) caching frequently accessed blocks. These steps mirror basic data collection and organization practices analogous to longstanding human conduct—*e.g.*, keeping a central record and local edits—without any technical innovation. *See Synopsys, Inc. v. Mentor Graphics Corp.*, 839 F.3d 1138, 1146 (Fed. Cir. 2016) (organizing information is an abstract idea); *Intell. Ventures I LLC v. Erie Indem. Co.*, 850 F.3d 1315, 1327 (Fed. Cir. 2017) (same); *In re TLI Commc’ns LLC Patent Litig.*, 823 F.3d 607, 611 (Fed. Cir. 2016) (“*TLI*”) (claim related to creating and storing data images based on “classification” of the data); *Content Extraction & Transmission LLC v. Wells Fargo Bank, Nat’l Ass’n*, 776 F.3d 1343, 1347 (Fed. Cir. 2014) (“The concept of data collection, recognition, and storage is undisputedly well-known.”).

Claim 1 recites broad steps—storing root and leaf images and merging them using a generic “union block device”—without any specific algorithm, circuit, or new file-system structure. *See* ’282 Patent at claim 1; *see also ChargePoint*, 920 F.3d 769 (claims using functional language to describe results without specific technological means are abstract). The patent itself concedes these concepts were conventional: cluster computing and distributed file systems were established technologies; root-leaf boot images were common; and caching algorithms like LRU were routine. *See* ’282 Patent at 1:21–35, 1:62–2:6; ’844 Patent at 1:31–45, 2:14–25, 6:38–7:17.

Claim 7 of the ’844 Patent merely adds caching blocks already accessed—another routine function the specification admits was standard. *See* ’844 Patent at 6:38–7:17; *Erie Indem.*, 850

F.3d at 1327 ("organizing and accessing data includes longstanding conduct that existed well before the advent of computers"). Simply storing data in a hierarchy, caching it, or recognizing and organizing information are classic examples of abstract ideas. *See Content Extraction*, 776 F.3d at 1347; *Versata Software, Inc. v. NetBrain Techs., Inc.*, 2015 WL 5768938, at *7 (D. Del. Sept. 30, 2015) ("representing information in a hierarchy amounts to an abstract idea").

In the end, the claims resemble a traditional library system: the central card catalog serves as a shared, primary record (root); individual checkout cards track each book's borrower and status (leaf); and the return cart holds recently returned books awaiting reshelving (cache)—highlighting that these practices are longstanding techniques for organizing and storing information, not inventive technological solutions. Because the claims do not specify any concrete mechanism or technical advancement beyond these conventional organizational methods, they are directed to an abstract idea and fail *Alice* step 1.

a. Claims 1 and 7 Lack an Inventive Concept.

Claims 1 and 7 also fail *Alice* step 2 because they do not recite any "inventive concept" that could transform the abstract idea of organizing and storing information into a patent-eligible application. *See Alice*, 573 U.S. at 217–18. Instead, the claims apply the abstract root-leaf storage idea using generic, conventional computing components.

The patents themselves concede that the claimed techniques—storing root images, maintaining leaf images for local changes, and caching frequently accessed blocks—were all well-known, conventional practices at the time of filing. *See* '282 Patent at 1:21–35, 1:62–2:6 (cluster computing, distributed file systems, root-leaf boot images); '844 Patent at 1:31–45, 2:14–25, 6:38–7:17 (caching). These admissions confirm that the claims use generic computing hardware and software without any new algorithms, configurations, or technological improvements. *Symantec*, 838 F.3d at 1315 ("claims use generic computers to perform generic computer functions").

The claims themselves underscore their conventional nature, reciting only high-level functional steps—"providing," "distributing," "storing," "interfacing," and "caching"—without specifying any inventive implementation for these tasks. *See BSG Tech.*, 899 F.3d at 1290–91 ("If a claim's only 'inventive concept' is the application of an abstract idea using conventional and well-understood techniques, the claim has not been transformed into a patent-eligible application of an abstract idea"). Components like the "union block device" are described in the specification as low-level drivers performing routine merging of data blocks, not any technological advance. *See* '282 Patent at 4:41–45; '844 Patent at 5:19–64.

Courts have invalidated similar claims applying conventional computing elements to abstract goals. *See, e.g.*, *Content Extraction*, 776 F.3d at 1348 (holding claims for data extraction and storage invalid because they relied on routine computing hardware and techniques). Claims 1 and 7 fall squarely in this category, merely combining conventional elements to perform abstract data organization and caching without any innovative improvement.

The prosecution history of the '282 Patent reinforces the absence of a non-abstract inventive concept. The examiner initially rejected the claims as abstract, and the applicant overcame that rejection solely by adding generic hardware references, such as "first storage unit," "second storage unit," and "union block device." *See* Dkt#55 at Ex. A at 4–5; Ex. B at 1. But under modern § 101 precedent, "the mere recitation of a generic computer cannot transform a patent-ineligible abstract idea into a patent-eligible invention." *Alice*, 573 U.S. at 223–24.

In the end, the claims merely require storing one type of data (a "root image") in one place, another type of data (a "leaf image") in a second place, and using standard hardware and known techniques to merge or cache them. They provide no inventive concept—claims 1 and 7 fail both steps of the *Alice* inquiry.

B. U.S. Patent No. 8,407,722

1. State of the Art Relevant to the ’722 Patent

At the time of the purported invention, claimed to have a priority date of December 18, 2000, the field of asynchronous messaging, client registration, and dynamic content routing was well established. Numerous standards, protocols, and technologies had already addressed the challenges of efficiently distributing data updates in networked environments, particularly where client devices needed to receive specific information based on prior registration.

The alleged innovation in the ’722 Patent centers around organizing and transmitting data through a method that involves client registration and message routing within a dynamic network architecture. However, as demonstrated below, these concepts were not novel or unconventional as of December 2000.

a. Networking Standards and Protocols (Pre-2000)

One of the foundational concepts purportedly improved by the ’722 Patent is asynchronous messaging, where data updates are sent without requiring an immediate response from the client. Asynchronous data routing was not a novel concept at the time of the alleged invention; it had been widely implemented in established systems and protocols well before the priority date.

One of the earliest implementations of dynamic data transmission is IP Multicast, standardized as RFC 1112 in 1989. IP Multicast allows sending a single data transmission to multiple recipients who have joined a specific multicast group. This approach significantly reduced network traffic by ensuring that only registered devices received the transmitted data. The ability to direct data only to interested recipients mirrors the concept of client registration for data updates, as claimed in the ‘722 Patent.

Similarly, CORBA Event Services, introduced in the late 1990s, provided asynchronous communication between distributed objects. These services allowed clients to register for specific

events or updates, forming a fundamental part of distributed application architectures. CORBA's event-driven model effectively addressed the need for targeted data distribution and client registration in networked systems, predating the patent's purported improvements.

Another significant standard, the Java Message Service (JMS), was introduced in 1998. JMS implemented both the publish-subscribe model and point-to-point messaging, allowing clients to subscribe to specific data topics and receive only the relevant updates. This capability directly addressed the problem of selective message delivery, which the '722 Patent later claimed to improve.

Likewise, TIBCO Rendezvous, available by 1998, utilized content-based addressing and routing to manage the efficient delivery of data in real-time applications. This system also incorporated message queuing and subscription mechanisms, showing that targeted data dissemination was a well-understood challenge long before the alleged invention.

b. Message Queuing and Client Registration Systems

During the 1990s, message queuing systems were already employing techniques for client registration and selective message distribution. IBM MQ Series, introduced in the early 1990s, provided robust message queuing with support for both publish-subscribe models and point-to-point communication. These systems enabled client applications to register for specific message types, thereby receiving only the updates of interest. This core functionality—registering for updates and receiving targeted messages—parallels the method claimed in the '722 Patent.

In a similar vein, Gryphon, a content-based routing system introduced in 1998, supported dynamic data routing and client subscriptions. It allowed clients to receive updates based on content specifications, a method fundamentally similar to the dynamic message routing described in the '722 Patent.

Another early messaging protocol, Session Initiation Protocol (SIP), which was standardized in 1999, offered a subscription and notification mechanism for presence updates. Through SUBSCRIBE and NOTIFY functions, SIP enabled clients to receive real-time notifications based on their expressed interests, thus efficiently handling client-specific data routing.

c. Relevant Prior Art Patents (Pre-2000)

Several patents pre-dating the ’722 Patent also addressed dynamic content routing and client registration.

- **US Patent 5,754,939 (Herz et al.)** (issued in **1998**) discloses methods for routing messages to recipients based on profile information. This technique inherently involves selectively delivering messages to clients who registered to receive them, thus predating the ‘722 Patent’s claimed method of client-specific message updates.
- **US Patent 5,845,324 (White et al.)** (issued in **1998**) similarly addresses message routing in networked communication systems, emphasizing methods where client devices receive only the relevant data based on their registrations.
- **US Patent 5,919,247 (Van Hoff et al.)** (issued in **1999**) discusses distributed content update systems that involve client-server architectures to update registered clients. This system reflects the idea of routing updates only to those clients that have expressed a need for specific data, which the ‘722 Patent claims as an improvement.

d. Real-Time Data and Event Notification Systems

By the late 1990s, event notification systems were leveraging client subscriptions to deliver updates efficiently. For example, Event Notification Services from 1999 utilized client-specific

subscriptions to notify registered users of changes or updates, mirroring the client registration and update routing claimed in the ’722 Patent.

Another significant example from 1996 is the Dissemination-Based Information Systems research, which focused on efficiently delivering data to registered users. These systems implemented techniques for selectively transmitting updates, thereby optimizing network resources, much like the patent’s method of reducing message traffic.

e. Industry Implementations (Pre-2000)

In practice, industries such as finance had long implemented real-time data systems that updated registered clients with new information, such as stock price changes. Middleware systems like IBM MQ and CORBA were commonly used in enterprise environments to route messages efficiently, leveraging client subscriptions and content-based routing well before the priority date of the ’722 Patent.

f. Conclusion

The evidence shows that by December 2000, the concepts underlying the ’722 Patent—specifically client registration, dynamic content routing, and efficient message dissemination—were well-established in the field. The alleged invention does not introduce a novel technological improvement but rather combines existing methods and standards in a predictable way. The claimed methods represent an incremental combination of known techniques rather than a groundbreaking departure from the established state of the art.

2. The Asserted Claims of the ’722 Patent are Ineligible Under § 101

The Asserted Claims (claims 14, 16, 17, and 18) of the ’722 Patent recite the abstract idea of receiving information, identifying relevant content, registering interest, and disseminating updates to interested parties. This is a long-standing and fundamental practice in organizing and distributing information—not a technological improvement or specific technical solution. Because

the claims implement an abstract idea using only generic networking and data-handling functions without reciting any technological improvement or unconventional hardware, the claims fail both steps of the *Alice* framework.

a. The Asserted Claims of the ’722 Patent are Directed to an Abstract Idea

The Asserted Claims of the ’722 Patent are directed to the abstract idea of receiving information, identifying relevant content, registering interest, and disseminating updates to interested parties. Claim 14—the only representative independent claim—describes a method for enabling dynamic updates to “live objects” displayed on a client device through a structured communication framework involving a source device, a routing network, and intermediary nodes. An input source sends a data representation to a client device via a routing network; this data includes at least one live object—an identifiable element capable of receiving updates. The client device recognizes the live object, determines its identifier, and registers with the routing network to receive updates about it. This registration includes connection information, which is stored at a node in the routing network. When the input source sends an update message for the live object, the message is routed through a gateway that determines its category and selects the appropriate node type to handle it. The node then identifies the registered client and forwards the message. Upon receipt, the client updates the relevant property of the live object.

Claim 16 adds to claim 14 that the client stores metadata related to the live object, and that the update message modifies this metadata. Claim 17 adds to claim 14 that the update message includes a message type, which the client uses to determine how to apply the update. Claim 18 expands on claim 14 by allowing the client to register for multiple live objects and receive updates for each.

What the Asserted Claims of the ’722 Patent effectively describe is a rules-based information forwarding mechanism, based on identifiers and interest registration—a framework that has existed in mailrooms, subscription services, and newsrooms long before the advent of digital networks. Its implementation using computers and a “routing network” merely automates this longstanding human practice.

Stripped of jargon, the Asserted Claims of the ’722 Patent describe a familiar, abstract pattern: sending information, having a recipient identify what is relevant, and distributing future updates to those who have expressed interest. This pattern is not new or technological. It is, for example, identical in substance to how a traditional newsroom operates. A journalist (the “input source”) provides a summary of several developing stories (the “data representation”) to a central bulletin board in the newsroom. Each story on the board is a “live object” in the sense that it may be updated. Editors (the “client devices”) review the bulletin board and mark their interest in particular stories. When updates come in from the field, a receptionist (the “gateway device”) categorizes the update and determines which editor (the “node”) should receive it. The update is then delivered to the relevant editor, who revises the draft story accordingly.

This real-world newsroom example illustrates that the Asserted Claims of the ’722 Patent merely recite an abstract method of organizing and delivering information—a practice that has been implemented manually for decades. The fact that the ’722 Patent describes this process in the context of a computing environment does not render it any less abstract. Claims directed to abstract frameworks for information delivery—like updating content in response to user interaction or preference—have repeatedly been held patent-ineligible. *See, e.g.*, *Broadband iTV, Inc. v. Amazon.com, Inc.*, No. 6:20-CV-00921-ADA, 2022 WL 4703425, at *11 (W.D. Tex. Sept. 30, 2022) (J. Albright), *aff’d,* 113 F.4th 1359 (Fed. Cir. 2024); *see also Broadband iTV, Inc. v.*

Oceanic Time Warner Cable, LLC, 135 F. Supp. 3d 1175, 1178 (D. Haw. 2015) (claims directed to abstract idea of "using the same hierarchical ordering based on metadata to facilitate the display and locating of video content" ineligible under § 101). Because the Asserted Claims of the '722 Patent focus on the result of an implementing an abstract idea—delivering updated content to interested recipients—rather than a specific technological means of achieving that result, they fail at *Alice* step one.

The specification attempts to present these steps as an improvement over prior art by claiming to enhance network efficiency through dynamic client registration and message routing. It asserts that the use of node specialization and dynamic mapping reduces unnecessary message traffic. The routing network purportedly eliminates the need for the input source to track which clients are displaying the live objects by maintaining a registry of registered clients. The system is described as being useful for applications where content on client devices must be updated dynamically based on changes in data, such as stock prices or sports scores. However, the specification itself reveals that the claimed methods are implemented using conventional networking techniques. The routing network, which consists of nodes and gateways, is built using generic computing components, including single-processor computer systems running common operating systems like Linux. The specification indicates that the system utilizes existing messaging protocols, such as HTTP, and known client-server architectures. Furthermore, the patent acknowledges that the basic concepts of client registration and update handling were already present in existing methods that included client-driven approaches, applets, and server-driven updates using TCP/IP connections.

b. The Asserted Claims of the ’722 Patent Do Not Recite an Inventive Concept

Step 2 of *Alice* cannot save the Asserted Claims of the ’722 Patent from ineligibility under 35 U.S.C. § 101. The Asserted Claims of the ’722 Patent do no more than implement the abstract idea of selectively distributing content updates to interested recipients using generic computing components performing routine, conventional functions. The purported improvement—routing update messages based on client registration—does not introduce any new computing technology or method of enhancing network efficiency. Instead, it merely applies well-known client-server communication techniques to the problem of distributing data updates. The specification itself discloses that the system utilizes conventional networking components and known data transmission protocols without any significant modification.

Claim 14 recites basic components: an “input source,” a “client device,” a “routing network,” “nodes,” and “gateways.” But none of these are claimed in a specific or inventive configuration. The specification describes the input source as a web server or dynamic content provider, the client device as a browser-enabled device such as a PC or mobile phone, and the routing network as an internet-based message delivery structure. The “gateway” and “node” elements, while given roles in the message flow, are described in general terms that mirror conventional content delivery mechanisms—such as proxies, relays, load balancers, or intermediate servers.

There is no technical detail in the claim about how messages are classified, how registration is implemented, or how update routing is performed. The claim merely recites the expected result: that a client receives an update for a live object it previously registered for. Courts have routinely held that such claims, which rely on routine network behavior and leave implementation to the practitioner, do not supply an inventive concept. *See, e.g.*, *Two-Way Media Ltd. v. Comcast Cable*

Commc'ns, LLC, 874 F.3d 1329, 1339 (Fed. Cir. 2017) ("The claim uses a conventional ordering of steps—first processing the data, then routing it, controlling it, and monitoring its reception—with conventional technology to achieve its desired result.").

The specification itself confirms that the invention is designed to operate on existing infrastructure and leverages known technologies. Client devices are said to use standard web browsers with existing support for Java, JavaScript, or plug-ins. Update messages are transmitted over HTTP and are parsed using client-side scripts. The routing network is implemented using conventional clusters, nodes, and gateways, and messages are routed using category/type mappings or registry lookups—well-understood design patterns in networked systems. The so-called "live objects" are simply HTML elements or other page components that can be identified by an ID and updated via DOM manipulation or script execution, which common techniques in web development since at least the late 1990s. The use of an "activation module" to register interest in updates is just another name for client-side code that subscribes to a push service—an architecture long practiced in content syndication and notification systems. Nothing in Claim 14 requires, or even enables, a novel technical implementation of these mechanisms.

None of the limitations in claims 16, 17, or 18 inject any inventive concept into the '722 Patent:

- **Claim 16**'s mention of metadata storage and update is a routine feature of client-side state tracking. Web applications and software clients have long-maintained associated metadata (e.g., timestamps, tags, formatting) alongside core content.
- **Claim 17** introduces a message type field used to determine how to process an update. But conditional logic based on message types is a staple of basic

programming and messaging protocols. This is no more inventive than a "switch" statement tied to a message header.

- **Claim 18** expands registration to multiple live objects, which is a straightforward extension of the core idea. There is no novel mechanism for batch registration, grouping, or prioritization; the claim merely allows more than one subscription, a feature inherent in any scalable publish-subscribe system.

Thus, the dependent claims likewise apply well-known programming constructs and user-experience features without claiming how any of them are implemented in a novel or unconventional manner.

Furthermore, the combination of client registration and dynamic message routing was not an inventive concept at the time of the alleged invention. Technologies such as IP Multicast, Java Message Service (JMS), and CORBA Event Services were already implementing message routing based on client registration well before the priority date. The combination of these known elements does not produce unexpected results or provide a technological improvement. Here, the claimed method merely takes existing client registration and message routing techniques and applies them in a straightforward, predictable way.

The Asserted Claims of the '722 Patent therefore do not improve any specific computer functionality or solve any technical problem in a new way—they merely implement a conventional information delivery model using abstract functional language and general-purpose computing components. As such, the Asserted Claims of the '722 Patent fail *Alice* step two and are invalid under 35 U.S.C. § 101.

c. Conclusion

The Asserted Claims of the '722 Patent are invalid under 35 U.S.C. § 101 because they fail both prongs of the *Alice* framework. At step one, these claims are directed to the abstract idea of

distributing updates about selected content to interested recipients—an organizing principle that has long been practiced by humans and implemented in conventional information systems. These claims describe this idea at a high level of generality, using functional language untethered to any specific improvement in technology or network design. At step two, the claims do not recite any inventive concept sufficient to transform this abstract idea into a patent-eligible application. The components are generic, the operations are conventional, and the implementation relies entirely on known computing techniques. These claims simply automate a familiar content delivery paradigm using routine architecture, offering no technical advancement over the prior art.

C. U.S. Patent No. 7,949,785

The Asserted Claims (claims 30, 35, and 37) of the ’785 Patent are invalid under 35 U.S.C. § 101 because they are directed to an abstract idea and lack an inventive concept. The Asserted Claims of the ’785 Patent recite a virtual network manager that facilitates secure communications within a virtual community—an abstract concept under *Alice* step 1. Further, the claims use only generic and conventional computing components and processes without introducing any specific technological improvements, and as such, the claims likewise fail to recite an inventive concept necessary to survive *Alice* step 2. Consequently, the Asserted Claims of the ’785 Patent fail under *Alice* and are ineligible for patent protection under 35 U.S.C. § 101.

1. State of the Art in March 2003

By March 2003, secure communication and virtual networking were well-established fields, and numerous technologies were routinely used to address the challenges associated with secure data transmission over public networks. The ’785 Patent, which claims a virtual network manager for secure communication in a virtual community, builds on concepts and techniques that were widely known and used by March 2003. To fully understand the context of the invention, it

is essential to examine the prevailing technologies and methods that a person of ordinary skill in the art (POSA) would have recognized as routine and conventional.

a. Secure Communication and Virtual Private Networks (VPNs)

One of the most common methods for secure communication over public networks in 2003 was the use of Virtual Private Networks (VPNs). VPNs were routinely deployed to create secure tunnels that allowed private network traffic to be transmitted over the public Internet. These tunnels were established using encryption protocols such as IPsec (Internet Protocol Security), which provided authentication, encryption, and data integrity for IP communications. IPsec was commonly used to create secure point-to-point connections, effectively encapsulating data within an encrypted packet that could be transmitted securely over the Internet.

Other VPN protocols included the Point-to-Point Tunneling Protocol (PPTP), which facilitated the creation of VPNs by encapsulating data within IP packets, and Secure Sockets Layer (SSL)/Transport Layer Security (TLS), which were widely used for web-based secure communication. VPN technology was an integral part of network security practices, with major companies like Cisco offering VPN client software and integrated VPN solutions as part of their networking equipment. The concept of encapsulating private network traffic within a secure channel was routine and had been implemented in numerous commercial and enterprise settings.

Further, the use of VPNs addressed the growing need for secure remote access, allowing employees to connect to a corporate network from offsite locations. By encrypting data and using secure tunneling, VPNs enabled organizations to maintain private communications even when using the public Internet. This approach was considered standard practice for enterprises looking to protect data from unauthorized access.

b. Network Address Translation (NAT) and Address Depletion

During this period, the Internet was facing a well-documented problem: the depletion of available IPv4 addresses. The rapid expansion of Internet-connected devices had exhausted the finite pool of unique public IP addresses. Network Address Translation (NAT) emerged as a practical and widely implemented solution to this problem. NAT allowed multiple devices within a private network to share a single public IP address when accessing the Internet. This was achieved by translating the private IP addresses to the public IP address of a NAT device (such as a router) and tracking the active connections using port numbers.

NAT was particularly beneficial for enterprises with large internal networks, as it significantly reduced the number of public IP addresses needed. NAT devices maintained tables mapping internal (private) addresses to external (public) ones, enabling inbound and outbound traffic to be correctly routed. This technique was so fundamental that most consumer and enterprise routers incorporated NAT functionality by default.

The concept of NAT traversal was also well understood by 2003. Because NAT inherently interfered with direct peer-to-peer communication, solutions like STUN (Session Traversal Utilities for NAT) and UPnP (Universal Plug and Play) were developed to allow devices behind NAT to establish direct connections. These techniques were vital for applications such as VoIP (Voice over IP) and real-time communications, which required consistent end-to-end connectivity despite NAT barriers.

c. Dynamic DNS (DDNS) and Mobility Solutions

Another challenge related to IP address management was the dynamic assignment of IP addresses to devices, especially in mobile or residential contexts. Dynamic DNS (DDNS) provided a solution by automatically updating DNS records when a device's IP address changed. This was crucial for maintaining connectivity to devices that did not have a fixed IP address. DDNS allowed

users to maintain a consistent hostname that would resolve to the device's current IP address, enabling continuous access regardless of network changes.

Dynamic DNS was standardized by RFC 2136, published in 1997, and was commonly used in conjunction with NAT to maintain address stability for dynamically addressed hosts. The emergence of mobile IP protocols, including those outlined in RFC 3344, further addressed the mobility issue by allowing devices to maintain the same IP address while moving between different networks.

d. Peer-to-Peer (P2P) Networking and NAT Traversal

In parallel, peer-to-peer (P2P) networking was becoming increasingly prevalent, with applications such as file sharing (e.g., Gnutella, Napster) and distributed computing. These systems often faced challenges with NAT traversal, as direct device-to-device connections were impeded by NAT devices. To overcome this, P2P applications used techniques like hole punching, where both peers behind NAT would simultaneously open a connection to a third-party server to facilitate direct communication.

These traversal techniques, while not perfect, were necessary for maintaining direct connectivity in decentralized networks. The ability to establish direct communication between peers despite NAT interference was a key feature for P2P systems, and methods to achieve this were well known and routinely employed.

e. Virtual LANs (VLANs) and Virtual IP Addresses

Another well-established concept was the use of Virtual LANs (VLANs) to logically segment a physical network into smaller, manageable sub-networks. VLANs allowed devices to communicate as if they were on the same local network, even if physically separated. This logical grouping of devices was fundamental for both security and network management.

Similarly, the concept of virtual IP addresses was commonly used to represent services or devices within a network. Virtual IPs were not tied to a single physical interface, allowing systems to maintain service availability even if the underlying hardware changed. Load balancers and failover systems routinely used virtual IPs to distribute traffic or provide redundancy.

f. Conclusion

By March 2003, the landscape of network communication and secure virtual networking was marked by well-understood technologies: VPNs provided secure data transmission over public networks, NAT allowed efficient IP address management and connectivity, and dynamic DNS addressed mobility and dynamic IP assignment. P2P networking dealt with NAT traversal challenges using established methods, while VLANs and virtual IPs were commonplace for managing complex network topologies.

The ’785 Patent, therefore, builds on these conventional techniques without introducing any novel technological solution. Its reliance on well-known methods for secure communication, NAT traversal, and virtual addressing does not advance the state of the art. Rather, it merely applies conventional networking practices to the problem of secure virtual community formation, which had already been addressed through routine methods available at the time.

2. The Asserted Claims of the ’785 Patent Recite an Abstract Idea

The Asserted Claims of the ’785 Patent are directed to the abstract idea of membership management and address look-up in a communications network—mere administrative tasks performed every day by receptionists, security personnel, and bouncers. Claim 30, the only independent Asserted Claim of the ’785 Patent, recites:

> [30.0] A virtual network manager, comprising:
>
> [30.1] a network interface configured for data communication via a virtual network that is defined by a domain name having an

associated public network address;

[30.2] a memory and a processor to implement a register module configured to register devices in a virtual network, the register module further configured to:

[30.3] receive a registration request from an agent associated with a device;

[30.4] distribute a virtual network address to the device when the device is registered in the virtual network, the device being identified to other devices in the virtual network by the virtual network address; and

[30.5] a DNS server for the virtual network, the DNS server configured to receive a DNS request from a first device in the virtual network, and return a network address associated with a network route director, a private network address associated with a second device in the virtual network, and a virtual network address associated with the second device.

Stripped of jargon, the claimed elements are basic administrative functions involved in setting up and maintaining a private communication network—operations that map directly onto longstanding abstract concepts such as maintaining a directory of users, assigning identifiers, and responding to queries with directing information. Claim 35 builds on claim 30 by adding a "join module" that receives join and leave requests—analogous to a sign-in/sign-out log for network members. Claim 37 further adds that the join module maintains a mapping between virtual addresses and devices—a conventional association table akin to a user directory or ARP (address resolution protocol) table.

The Asserted Claims of the '785 Patent all reflect the abstract idea of membership management and address look-up in a communications network—akin to a corporate office receptionist managing an internal directory. The receptionist receives visitors (devices) requesting

access (registration), checks whether they're authorized to enter (authentication), assigns them a visitor badge with an internal extension number (virtual address), and, when asked, tells other employees where to find the visitor (DNS resolution and routing). The receptionist also tracks when the visitor checks in and out (join and leave requests) and keeps a temporary log mapping badge numbers to visitors (address-device association). These are routine administrative functions that merely facilitate communication within a defined space—just as the Asserted Claims do within a virtual network. There is no innovation in how the receptionist performs these tasks, and these tasks have been performed by humans for centuries. Likewise, the Asserted Claims do not improve any underlying networking technology or propose any inventive technical implementation. The Asserted Claims of the '785 Patent are simply automating a familiar organizational role using conventional computing tools, rendering them abstract under *Alice* step one.

Tellingly, the method of originally filed claim 64 (which issued as claim 48) did not include any requirement that the steps of the claim be performed by a computer. On February 4, 2009 (5 years before the *Alice* decision), the Examiner rejected claim 64 under 35 U.S.C. § 101, applying the *Bilski* "machine-or-transformation" test for patentable subject matter that existed in 2009. In other words, without the recitation of a "machine" (*i.e.*, a computer), the claims were not patentable under § 101. In response to the Section 101 rejection, the Applicants amended claim 64 to be "computer-implemented," as none of the originally-filed claims required the use of a computer. Although an amendment requiring that the method be performed by a computer was sufficient in 2009-2010 to overcome the Examiner's Section 101 rejections, this is not the case today. Under current Supreme Court and Federal Circuit law, the *Alice* steps apply.

The ’785 Patent Applicants’ computer-implemented amendment to independent claim 64 crystallizes two points. First, the amendment demonstrates that the Applicants understood that the method described in the ’785 Patent and claimed in the originally-filed claim 64 could be practiced without the use of a computer, *i.e.*, the method could be performed in the human mind, or by a human using a pen and paper. *See CyberSource Corp. v. Retail Decisions, Inc.*, 654 F.3d 1366, 1372–73 (Fed. Cir. 2011) (holding that a claim whose “steps can be performed in the human mind, or by a human using a pen and paper” is directed to an “unpatentable mental process[]”); *Elec. Power Grp.*, 830 F.3d at 1355 (“[C]laims focusing on organizing, characterizing, and/or sorting information are patent-ineligible because they are not significantly differentiable from ordinary mental processes.”). Second, this amendment demonstrates that the focus of the claims of the ’785 Patent is not on any specific asserted improvement in computer capabilities. *In re TLI Commc’ns L.L.C. Pat. Litig.*, 823 F.3d at 612 (“[T]he claims were not directed to specific improvement to computer functionality. Rather, they are directed to the use of conventional or generic technology in a nascent but well-known environment, without any claim that the invention reflects an inventive solution to any problem presented by combining the two.”).

Under *Alice*, a claim that is unpatentable without the recitation of a computer does not become patentable by reciting a computer. That the claims of the ’785 Patent merely implement the non-statutory subject matter on a generic computing device is plain from the fact that the originally-filed claims did not require that the claimed systems and methods include or be performed by a computer, respectively. Thus, the language of the Asserted Claims, their prosecution history, and the change in the law demonstrate that the Asserted Claims of the ’785 Patent are directed to an abstract administrative idea applied to a communications network.

3. The Asserted ’785 Patent Claims Lack an Inventive Concept

The Asserted Claims of the ’785 Patent fail at *Alice* step 2 because they do not recite anything beyond generic computer functions performed using conventional components. The specification confirms that the system is built using well-known networking elements (*e.g.*, processors, memory, interfaces, DNS servers, NAT traversal techniques, virtual IP addressing) without any specialized circuitry, protocol, or configuration.

The ’785 Patent itself acknowledges that the components and methods it employs were conventional at the time of invention. For example, the specification discusses the use of Network Address Translation (NAT) and virtual addresses to facilitate secure communication, but these techniques were already well-known in the field of networking. The patent does not propose any novel way of utilizing NAT or managing virtual addresses beyond their ordinary and conventional uses.

Claim 30, for instance, merely describes using a DNS server to resolve device addresses within a virtual network, which is a standard function of DNS servers generally. The idea of assigning virtual addresses to devices and resolving these addresses through DNS lookups is not unique or inventive. Instead, the patent recites high-level results—such as secure communication—without specifying how these results are technologically achieved. There is no disclosed protocol, no new addressing scheme, no algorithm for conflict resolution, and no structural innovation in how devices are registered or managed. The system instead relies on existing IP, UDP, NAT, and IPsec technologies. The claims are results-oriented: “register the device,” “assign an address,” “respond to a DNS query”—without any accompanying inventive technical solution.

The claim elements—processor, memory, network interface, modules—are standard hardware or logical software components performing their expected functions. There is no claim

that the invention requires new hardware, reconfigured components, or even custom protocols. The Asserted Claims of the ’785 Patent are therefore equivalent to the claims in *BSG Tech LLC v. BuySeasons, Inc.*, 899 F.3d 1281, 1291 (Fed. Cir. 2018), where the claims at issue merely limited an abstract idea to a particular technological environment and were held ineligible. Similarly, in *ChargePoint, Inc. v. SemaConnect, Inc.*, the court invalidated claims that combined generic networking capabilities with existing concepts without adding any inventive technology. 920 F.3d 759, 774 (Fed. Cir. 2019) (“But network control is the abstract idea itself, and ‘a claimed invention’s use of the ineligible concept to which it is directed cannot supply the inventive concept that renders the invention ‘significantly more’ than that ineligible concept.’”) (quoting *BSG Tech*, 899 F.3d at 1290). The Asserted Claims of the ’785 Patent follow the same pattern by applying well-understood networking techniques without advancing the state of the art.

4. Conclusion

The Asserted Claims of the ’785 Patent are invalid under 35 U.S.C. § 101. They are directed to abstract administrative operations for managing virtual networks and fail to recite any inventive concept in either their individual components or overall arrangement. They do not improve any underlying technology, nor do they disclose a novel technical mechanism for achieving the stated goals. As such, they fail both steps of the *Alice* test.

5. Admissions in the Specification

a. Network Address Translation (NAT) as Routine and Conventional:

The specification of the ’785 Patent explicitly acknowledges that NAT (Network Address Translation) was a well-known and conventional technique at the time: “One popular solution to the depleting address problem is Network Address Translation (NAT). This concept includes predefining a number of network addresses to be private addresses and public addresses. Public addresses are unique addresses that should only be used by one entity having access to the Internet.

That is, no two entities on the Internet should have the same public address. Private addresses are not unique and are typically used for entities not having direct access to the Internet. Private addresses are used in private networks. Private addresses can be used by more than one organization or network. NAT assumes that all of the machines on a network will not need to access the Internet at all times. Therefore, there is no need for each machine to have a public address." '785 Patent at 1:56-62.

b. Virtual Private Network (VPN) as Well-Known:

The patent also identifies VPN technology as an existing and established solution: "One solution currently in use that provides for local and remote specified entities to communicate and collaborate using the Internet is the Virtual Private Network (VPN). The VPN uses additional network software layers to increase security between users in the public realm and those in private realms. For example, some VPNs encrypt packets using IPsec (or other protocols). The encrypted packets are then encapsulated within a standard packet and transmitted across the Internet to the destination. At the destination, the encrypted packet is decrypted." '785 Patent at 4:58-67.

c. Dynamic DNS as Known and Conventional:

Dynamic DNS, which is also mentioned in the patent, is described as an existing technology that predates the invention: "One method of overcoming the mobility problem includes the use of Dynamic DNS. More information about Dynamic DNS can be found in RFC2136 incorporated herein by reference." '785 Patent at 5:11-14.

d. Hardware and System Components as Conventional:

The specification explicitly states that the hardware components required for the invention were standard and understood: "A hardware architecture for the machines, server or other devices used to implement the present invention should be well understood to one of average skill in the art. Suitable hardware includes one or more processors, a memory, a mass storage device, a

portable storage device, a first network interface, a second network interface and I/O devices, in communication with each other." '785 Patent at 9:42-48.

e. IP Addressing and Network Protocols as Routine:

The specification discusses the standard nature of IP addressing and network protocols: "Most machines on the Internet use the TCP/IP (Transmission Control Protocol/Internet Protocol) reference model to send data to other machines on the Internet." '785 Patent at 3:1-3.

D. U.S. Patent No. 8,027,326

Representative Claim 1 recites:

> [1.0] A method for increasing data rates and data throughput in a network, the method comprising:
>
> [1.1] selecting at least a first channel and a second channel, wherein the first channel and the second channel are adjacent without any other channels there between, wherein the first channel and the second channel each have a plurality of data subcarriers, wherein the data subcarriers of the first channel and the data subcarriers of the second channel are separated by a frequency gap corresponding to one or more guard bands between the first and second channels;
>
> [1.2] partially filling the frequency gap between the first channel and the second channel by adding one or more data subcarriers into the frequency gap such that the one or more guard bands are at least partially filled with at least some of the one or more data subcarriers using full spectral synthesis capability of a fast fourier transform or an inverse fast fourier transform;
>
> [1.3] **combining the first channel and the second channel** using channel bonding with orthogonal frequency division multiplexing (OFDM); and
>
> [1.4] transmitting data subcarriers occupying the first channel, the second channel, and the frequency gap in parallel to a receiver.

1. State of the Art Relevant to the '326 Patent

Southwest sets forth a summary of its current understanding of the state of the art for the general subject matter of the '326 Patent. The '326 Patent generally relates to a "method and

system for high data rate multi-channel wireless communications" which reuses "existing single channel radio designs" to "achieve very high data rate expanded bandwidth (wide band) WLAN operations." Broadly, the '326 Patent concerns the development of more efficient Wi-Fi, with I.V.'s Complaint focusing on "hardware and/or software from these providers that support Wi-Fi, including IEEE 802.11n and 802.11ac protocols." Dkt#1 ¶ 93. These Wi-Fi protocols were widely used as of the date of filing:

"802.11ac was finalised in 2013 and you will find it in every major smartphone, laptop and desktop computer and smart television. It succeeds the equally-badly named '802.11n' which has been around since 2007 and brings some major benefits." Kelly, Gordon, "802.11ac vs 802.11n Wi-Fi: What's the Difference?" Forbes, December 30, 2014 *available at* https://www.forbes.com/sites/gordonkelly/2014/12/30/802-11ac-vs-802-11n-wifi-whats-the-difference/.

802.11 was already a popular standard. "IEEE 802.11-based wireless technology is well known by the common name 'Wi-Fi' (Wireless Fidelity) and provides wireless connectivity to the majority of today's digital devices such as mobile phones, laptops, smart TVs, etc. The most commonly used wireless technologies in smart manufacturing, especially discrete manufacturing industries are also IEEE 802.11 based." Liu, Xuejing, et al., "Exploring the Regulatory Mechanisms of Long Non-Coding RNAs in the Pathogenesis of Atherosclerosis," Pubmed Central, August 1, 2022 *available at* https://pmc.ncbi.nlm.nih.gov/articles/PMC9824593/.

Trends in the Wi-Fi industry included improving internet speeds, increasing bandwidth and reducing interference, particularly as the volume of users increased.

2. The Asserted Claims of the '326 Patent are Ineligible Under 35 U.S.C. § 101

The Asserted Claims (claims 1, 4, and 18) of the '326 Patent are directed to the abstract idea of combining adjacent communication channels to increase data throughput in a network. The Asserted Claims of the '326 Patent merely implement this concept using conventional networking techniques and generic computing components, offering no technological innovation or improvement. As such, they are ineligible under 35 U.S.C. § 101 because they are directed to an abstract idea and fail to recite an inventive concept, as required under the two-step framework set forth in *Alice Corp. v. CLS Bank Int'l*, 573 U.S. 208 (2014).

a. The Asserted Claims of the '326 Patent are Directed to an Abstract Idea

The Asserted Claims of the '326 Patent recite the abstract idea of combining channels to increase data throughput (claims 1 and 18) and transmitting data to multiple radios (claim 4), and fail Step 1 of *Alice*. *See Alice*, 573 U.S. at 216-17. These are long-standing and fundamental practices in sending and receiving information over a network—not a technological improvement or specific technical solution. There is nothing to the patent beyond the concept of 'combine two pipes together, including the space between them, to get a bigger pipe.'

Channel bonding and transmitting data to multiple radios is an abstract idea as claims directed to sending and receiving data are abstract in nature. *See, e.g., Affinity Labs of Texas, LLC. v. DIRECTTV, LLC*, 838 F.3d 1253, 1261 (Fed. Cir. 2016) (explaining that patents directed to "the conveyance and manipulation of information using wireless communication and computer technology" do not disclose eligible subject matter). Claims directed to formatting data are also abstract. *See Dropbox, Inc. v. Synchronoss Techs., Inc.*, 815 F. App'x 529, 537 (Fed. Cir. 2020) (finding claims ineligible that were directed, in part, to "formatting data").

b. The ’326 Patent Claims Lack an Inventive Concept

Step 2 of *Alice* cannot save the Asserted Claims of the ’326 Patent from ineligibility under 35 U.S.C. § 101. The Asserted Claims of the ’326 Patent do no more than implement the abstract idea of increasing data throughput by using generic computing components performing routine, conventional functions. Namely, channel bonding (claims 1 and 18) and transmitting data to multiple radios (claim 4) lack an inventive concept because such claims amount only to generic components and fail to demonstrate unconventionality. *See Dropbox*, 815 F. App’x at 537 (finding that “data transfer connection[s] are generic computer-related concepts as they literally are just data transfer modalities” and are thus not inventive concepts).

c. Conclusion

The Asserted Claims of the ‘326 Patent are invalid under 35 U.S.C. § 101. They are directed to the abstract idea of transferring data over a network and fail to recite an inventive concept. Because the claims implement an abstract idea using only generic networking and data-handling functions without reciting any technological improvement or unconventional mechanisms, the claims fail both steps of the *Alice* framework.

E. U.S. Patent No. 7,324,469

The ’469 Patent, titled “Satellite Distributed High Speed Internet Access,” claims methods for providing an internet hotspot to subscribers in a remote location. Asserted independent Claim 24 of the ’469 Patent recites:

> 24. An Internet Hotspot comprising:
>
> a satellite dish **communicating with the Internet** via one or more data links with a satellite;
>
> at least one router operatively coupled to the satellite dish;
>
> a subscriber access unit operatively coupled between the satellite dish and the at least one router, the subscriber access unit **being capable of authenticating** a subscription account

> associated with a user prior to allowing the user access to the Internet; and
>
> a web-ready device operatively coupled to the at least one router, the web-read device **having a browser application** operating thereon for accessing the Internet;
>
> wherein the satellite dish, at least one router and the subscriber access unit are located in a remote location a experiencing a relatively high volume of transient traffic;
>
> wherein the user **may authenticate** the subscription account and access the Internet at the remote location by **establishing a data connection** between the web-ready device and the router.

(emphasis added).

1. State of the Art Relevant to the '469 Patent

As of September 2003—the earliest claimed priority date of the '469 Patent—wireless and wired Internet hotspots were ubiquitous, and their operation as a pay-for-use business was well known. For example, a 2003 book entitled "Going Wi-Fi" describes that hotpots were "all the rage":

> North America, Singapore, Korea and Japan have led this Wi-Fi trend, offering traveling laptop users temporary wireless Internet access in various types of public gathering spots including, for example, hotels and cafés. According to Garner Inc., the number of HotSpots will grow to more than 71,000 in 2003 from about 1200 in 2001.

Reynolds, Janice, "Going Wi-Fi A Practical Guide to Planning and Building an 802.11 Network," CMP Books, San Francisco (2003) ("Going Wi-Fi") at 4. These thousands of Internet hotspots included monthly subscription-based service as well as some that "allow users to purchase as little as 30 minutes worth of wireless access for the equivalent of a few dollars." *Id*. at 5. Well-established telecommunications providers like T-Mobile and Boingo were, at the time the Asserted Patent was filed, already offering hotspots "from Starbucks to hotels to airports." *Id.* ("and, of course, they plan to charge plenty for it."). Numerous publications describe the availability of hotspots at locations such as hotels, airports, coffee shops, and fast-food restaurants. *See* Ellison, Carol, "Unwire Everywhere," PC MAGAZINE (Special Wireless Issue 2003) at 97-104 ("Hot spots

are cropping up at a remarkable rate to meet the connectivity demands of users as they venture out from their homes and offices.”).

The concept of subscription or payment authorization to access Internet hotspots was likewise well established at the time of the filing of the ’469 Patent, and many companies offered “turnkey” hotspot “kits” which

> deliver the fundamental services layer by providing standards-based services such as secure authentication, automated configuration, IP routing, firewalls, caching, remote management, usage tracking, and bandwidth shaping.

Going Wi-Fi at 271.

With the advent of satellite Internet connectivity quickly came satellite Internet “hotspots,”—of course, for a fee. In one example, Airpath Wireless offered turnkey hotspot hardware, software, and connectivity services “for Hot Spot providers in need of broadband connectivity in remote or cost-prohibitive Hot Spot locations,” such as “marinas, truck-stops, campgrounds, resorts, and hotels located in rural areas.” June 25, 2003, Press Release available at https://web.archive.org/web/20030808000849/http://www.mainstreamdata.com:80/content/_news/news0.html. Airpath services included a “Hot Spot Billing Suite” for authentication and subscriber management. Satellite networks were especially suited to implementation of hotspots outside of urban settings, including military bases throughout the world. iDirect Government provided Internet cafes in US military tents and buildings around the world beginning in March 2000. *See* https://www.idirectgov.com/media/1jxdg0c3/idigt_cs_spawar-mwrnet_0215.pdf.

Although the ’469 Patent does not mention aircraft or in-transit connectivity—the patent addresses only fixed locations such as “conference centers”—Southwest also addresses the state of the art pertaining to in-flight connectivity in view of the plaintiff’s construction of the claims to encompass in-flight connectivity systems. The Boeing Company announced its in-flight

connectivity system, "Connexion," three years before the filing of the provisional application of the '469 patent, in April 2000. Building on its proprietary satellite transceiver antenna technology, Connexion installed a "flat, two-inch antenna and additional wiring [] to each top of aircraft" which "provides enhanced response to directional changes" and which adjusted "to keep in touch with the nearest satellite." Suwanateep at 7-8. Boeing's Connexion system was among the first to offer real-time airborne connectivity. *Id*. at 5.

> The cabin is equipped with onboard server, router and service-analysis equipment and is outfitted for the security enhancement capabilities pursuing for commercial airline customers. Seats are configured for connectivity. Since Internet traffic tends to happen in bursts, the cabin file-server not only allows multiple users to share access to a single physical connection, but also allows them to be on-line simultaneously.

Suwanateep at 9. Connexion by Boeing was first installed on private corporate aircraft, but later rolled out on major commercial airlines including United Airlines and Delta in early 2003. With commercial airline adoption came paid access for travelers using Connexion In-Flight Portal:

Find out about our In-Flight Portal

Before you access the Internet through the Connexion by Boeing service, you will have the option to select a variety of free services and content through our In-Flight Portal.

The In-Flight Portal's selection of top news and entertainment headlines will help keep you up to date, even at 39,000 feet. You can also use the In-Flight Portal to register for the service, view Frequently Asked Questions (FAQs), and contact customer care.

https://web.archive.org/web/20030201115424/http://www.connexionbyboeing.com/index.cfm.

Aircrafts were not the only in-transit systems for Internet access designed to meet growing demand in the early 2000s. In 2002, satellite provider Intelsat partnered with Maritime Telecommunications Network (MTN) to provide connectivity to maritime customers including Norwegian Cruise Lines. *At Sea But Never Out Of Touch*, CRUISE INDUSTRY QUARTERLY,

(Summer 2003) at 25. MTN provided complete hardware and software solutions to cruise ships, including internet cafes and billing options for passenger access.

2. The Asserted Claims of the ’469 Patent recite the business practice of placing a paid hotspot in a “transient location”

Each of the Asserted Claims of the ’469 Patent are invalid under 35 U.S.C. § 101 because the claims are directed to an abstract idea and fail to describe an inventive concept. *Alice Corp. v. CLS Bank Int’l*, 573 U.S. 208, 216-17 (2014). For example, all of the Asserted Claims of the ’469 patent are generally directed to an abstract idea for Section 101 purposes and under Intellectual Venture’s apparent constructions. The sole asserted independent claim, claim 24, concerns placing a known composition of commercial components in a “remote location” to establish a subscribers-only internet hotspot. The specification also makes clear that the invention of the Asserted Patent is the idea of placing paid hotspots where users would otherwise not have Internet access:

> The present invention provides rural “Hotspots” (such as Wi-Fi access, for example) to enable wireless and hardwired, satellite distributed Internet access for anyone with a PC or other web-ready device (wireless ready or cabled) and a valid credit card.

’469 Patent at [1:34-38]. The business idea of charging people money for internet access in a “transient location” like a restaurant or motel is just that: a business idea. Paying for services is a “fundamental economic practice long prevalent in our system of commerce” and, “as such, is a patent ineligible abstract idea.” *W. Express Bancshares, LLC v. Green Dot Corp*., 816 F. App’x 485, 487 (Fed. Cir. 2020).

Applying this fundamental economic practice to tangible components such as commercially available network equipment does not alter the fact that the claims are directed to “an art or principle in the abstract, and not for any particular method or machinery.” *ChargePoint, Inc. v. SemaConnect, Inc.*, 920 F.3d 759, 769 (Fed. Cir. 2019) (quoting *Wyeth v. Stone*, 30 F. Cas. 723 (C.C.D. Mass. 1840)); *ChargePoint*, 920 F.3d at 770 (“In short, the inventors here had the

good idea to add networking capabilities to existing charging stations to facilitate various business interactions. But that is where they stopped, and that is all they patented. We therefore hold that claim 1 is 'directed to' an abstract idea"). The patentee's implementation rests wholly on the existing knowledge of a person of skill in the art: "The Hotspot 10 comprises *all the equipment installed at the rural location that is necessary to provide Internet access via satellite*." '469 patent at 4:18-21 (emphasis added). "The Ethernet wireless access point 40 can employ *a security protocol of a type that is known to persons skilled in the art*, such as the 802.11b security protocol, or any subsequent or future versions of the 802.11 standard." '469 patent at 5:19-25 (emphasis added). The Federal Circuit has "repeatedly found the concept of controlling access to resources via software to be an abstract idea." *Ericsson Inc. v. TCL Commc'n Tech. Holdings Ltd*., 955 F.3d 1317, 1327 (Fed. Cir. 2020); *see also Smartflash LLC v. Apple Inc.*, 680 F. App'x 977 (Fed. Cir. 2017).

3. The Asserted Claims of the '469 Patent lack an inventive concept.

The specification provides no solution to overcome technical challenges associated with "remote"-ness, or a "high volume of transient traffic" or "subscriber access." The claims of the Asserted Patent are results-driven and fail to overcome ineligibility. Each limitation recites generic components which are "capable of" performing connectivity, routing, and authorization using any method whatsoever. As set forth above and in the attached claim charts, paid Internet hotspots were very well known and widely used at the time of the Asserted Patent. Placing a paid Internet hotspot in "a remote location" is insufficient to render the claims eligible where no particular improvement is recited to, for example, teach *how* a subscriber access unit is "capable of" authorizing payments in "a remote location." *Universal Secure Registry LLC v. Apple Inc*., 10 F.4th 1342, 1346 (Fed. Cir. 2021); *Elec. Power Grp., LLC v. Alstom S.A.*, 830 F.3d 1350, 1354 (Fed. Cir. 2016) ("limiting the claims to the particular technological environment of power-grid

monitoring is, without more, insufficient to transform them into patent-eligible applications of the abstract idea at their core."). The "essentially result-focused, functional character of claim language has been a frequent feature of claims held ineligible under § 101, especially in the area of using generic computer and network technology to carry out economic transactions."

Each of the asserted dependent claims likewise recite the use of conventional components or processes to achieve results for which those components are designed. '469 Patent, claim 25 ("a wired data connection" "a wireless data connection"); claim 26 ("a plurality of users **may access** the Internet simultaneously," "at the remote location," "establishing data connections with the router via their web-ready devices"); claim 28 ("the data connections include wireless data connections"); claim 32 ("the wireless connection," "802.11a wireless area network," "802.11b wireless area network," "802.11g wireless area network," "802.11n wireless area network"). *See also CyberSource Corp. v. Retail Decisions, Inc.*, 654 F.3d 1366, 1370-73 (Fed. Cir. 2011) (a method of verifying the validity of credit card transactions over the Internet held patent-ineligible as directed to an abstract idea); *buySAFE, Inc. v. Google, Inc.*, 765 F.3d 1350, 1354-55 (Fed. Cir. 2014) (guaranteeing performance in an Internet transaction was patent-ineligible); *TLI Communications LLC Patent Litigation*, 823 F.3d 607, 615 (Fed. Cir. 2016) ("vague, functional descriptions of server components are insufficient to transform the abstract idea into a patent-eligible invention."). The claimed steps are described at a high level of generality, using generic terms, confirming the '469 is ineligible under 35 U.S.C. §101.

F. U.S. Patent No. 7,257,582

1. State of the Art Relevant to the '582 Patent in March 2002

The principles underlying the '582 Patent's claims were widely known and implemented in numerous systems prior to the claimed priority date of March 13, 2002. Long before March 2002, distributed computing frameworks had already embraced first-come, first-served dynamic

task assignment, self-scheduling workloads, and efficient data partitioning across multiple processing nodes. These methods were integral to parallel computing, volunteer computing initiatives, and large-scale database management—fields in which researchers had been refining these concepts for over a decade prior to March 2002.

By the late 1990s, high-performance computing ("HPC") systems, parallel databases, and distributed file systems were actively employing automated load balancing techniques, allowing processors to dynamically claim tasks as they became available. The master-worker paradigm, in which a master process assigns work to multiple processors and redistributes tasks based on availability, was a foundational computing concept. Volunteer computing projects like SETI@home (1999) had already demonstrated the real-world application of parallel task distribution and result aggregation, processing enormous datasets by dynamically distributing work units to thousands of participating machines. Similarly, industry-standard MPP (massively parallel processing) databases had been using data partitioning techniques since the 1980s to distribute processing workloads across multiple nodes, enabling efficient parallel query execution.

These well-established techniques, which had been publicly disclosed and successfully deployed in both academic and industry settings, directly contradict any claim that the '582 Patent introduced a novel approach. The state of the art at the time confirms that the patent merely recites preexisting, widely implemented concepts in distributed computing and parallel processing.

a. Dynamic Scheduling in Parallel Processing was Well Known by March 2002.

By the early 1990s, dynamic scheduling of computational workloads was an established technique in parallel computing. Long before March 2002, researchers and industry practitioners had widely implemented first-come, first-served task scheduling to efficiently utilize processor resources. The master-worker paradigm—where a central process partitions a workload and

distributes it dynamically to available processors—was already a fundamental principle of parallel computing systems. Further, the bag-of-tasks model, introduced by Carriero and Gelernter in the late 1980s, demonstrated how worker processes could independently pull new tasks from a shared task pool, ensuring that faster processors were never idle while waiting for slower ones. This dynamic, demand-based task assignment allowed distributed computing systems to scale efficiently and optimize processor utilization.

By 1990, researchers had expanded on this concept through self-scheduling for parallel loops, where processors independently claimed computational iterations rather than following a static, predetermined allocation. Hewlett-Packard's 1994 patent, U.S. Patent No. 5,325,493, further reinforced this technique by describing a system in which processors would automatically request and execute tasks on a first-come, first-served basis, eliminating bottlenecks and ensuring that computational work was dynamically distributed. In that system, each processor, upon finishing its current task, automatically requests the next task, and processed data is eventually recombined in order. The patent emphasizes that this approach maximizes parallel throughput by not waiting for slower processors.

The same principle was later embodied in volunteer computing projects such as SETI@home (1999), which partitioned large astronomical data files into discrete work units and assigned them to available processors across a network. Each participant's system would request the next available task, execute it, and return results asynchronously to be merged into the central database. This demonstrated not only the viability but also the widespread public deployment of dynamically distributed task execution in a distributed computing environment. By 2000, Intel's patent application (US 2002/0040381 A1, filed October 2000) described a multi-processor load-balancing system that placed computational tasks into a queue, where processors would pull the

next available job upon completion of a prior task, ensuring continuous processor utilization. This system functioned precisely as described in the ’582 Patent: tasks were not assigned in advance but dynamically distributed as processors became available.

These techniques were not confined to academic research—they were actively deployed in high-performance computing, commercial database processing, and networked data analysis. Systems such as IBM LoadLeveler, Sun Grid Engine, and Condor were already widely used in enterprise computing to dynamically distribute jobs among processors. These systems employed task scheduling policies, including first-come, first-served scheduling, priority-based scheduling, and adaptive load balancing, ensuring optimal utilization of processing resources. The ’582 Patent describes an approach where subtasks are executed in parallel and reassigned based on availability, but this was precisely the methodology employed by Condor—a job scheduling system developed at the University of Wisconsin, which allowed idle processors to claim unassigned tasks dynamically. Similarly, the Globus Toolkit, an essential framework for grid computing, provided mechanisms for distributed task execution across heterogeneous systems, allowing real-time reassignment of workloads based on processor capacity. Google’s 2004 MapReduce paper would later credit these well-established techniques as the foundation for large-scale distributed computing, confirming that the core scheduling method claimed in the ’582 Patent was well-known and widely implemented before March 2002

The ’582 Patent itself acknowledges that job scheduling in parallel systems was well understood, admitting that dynamic task execution techniques were already known in the art. The first-come, first served scheduling policy, in particular, was not a novel concept in the context of multi-processor computing; rather, it was a basic scheduling principle applied in numerous high-performance computing environments. U.S. Patent No. 6,334,137 (2001) further reinforces this

point, as it describes a system for controlling the parallel execution of jobs, dynamically registering jobs, and balancing workloads among multiple computing nodes. Similarly, U.S. Patent No. 5,765,166 (1998) highlights a parallel processing approach for multiple hypothesis tracking, which includes task distribution based on processor availability, mirroring the claim structure of the ’582 Patent. Thus, dynamic scheduling as described in the ’582 Patent was already well established in both commercial products and prior patents, confirming that the claimed invention lacks novelty.

b. Data Partitioning and Shared Processing was Well Known by March 2002.

By March 2002, parallel data processing had been an essential component of high-performance computing for decades. In the 1980s, massively parallel processing (MPP) databases such as Teradata had introduced data partitioning, where large datasets were automatically divided across multiple processors for simultaneous execution. Research projects such as the Gamma database further developed this concept, refining techniques for parallel query execution on partitioned data. These advances laid the foundation for modern distributed data processing systems and demonstrated that splitting an input dataset into independently processed partitions was a well-established practice.

The concept of shared file access across multiple processors was equally well understood. The Andrew File System (AFS), developed in the 1980s, allowed multiple machines to access and process the same file concurrently, enabling parallel computation on shared datasets. By the late 1990s, enterprise computing environments had fully embraced Network Attached Storage (NAS) and Storage Area Networks (SAN), providing high-speed, concurrent access to large datasets by multiple processing nodes. These technologies made it trivial for a cluster of machines to read from and write to a shared file, a key capability claimed in the ’582 Patent.

Meanwhile, volunteer computing projects such as SETI@home and distributed.net (1997) were actively employing data partitioning and parallelized computation across thousands of machines worldwide. SETI@home, for example, split radio telescope data into work units, distributed them to participating computers, and recombined results asynchronously, demonstrating large-scale parallel processing on shared datasets. Similarly, distributed.net divided large cryptographic keyspaces into smaller search ranges, assigned them to individual processors, and collected results into a master database—a direct precursor to the distributed workloads envisioned in the ’582 Patent.

The process of dividing large computational tasks across multiple processors and merging the results was also well established in high-performance computing (HPC). Systems such as IBM’s LoadLeveler and Condor (1990) scheduled jobs across clusters of computers, often breaking down large computational tasks into parallelized workloads. Parallel database management systems, including those developed by Oracle and IBM, routinely split and processed massive tables across multiple processors to accelerate query performance. These well-documented techniques anticipated the purported invention of automatically partitioning an input dataset, distributing partitions across processors, and merging the results into an output dataset.

Further, prior to March 2002, Message Passing Interface (MPI) and Parallel Virtual Machine (PVM) had become the standard for distributed computing, providing detailed methodologies for logically subdividing workloads across multiple nodes. These frameworks enabled data segmentation, real-time allocation of tasks to available processors, and efficient reassembly of processed outputs. Similarly, Parallel Database Management Systems (DBMS), including Oracle Parallel Server and IBM DB2, had implemented partitioning strategies for decades, allowing concurrent query execution across multiple computing nodes. Likewise, U.S.

Patent No. 5,535,393 (1996) discloses a system for optimally distributing workloads among processors while minimizing data contention—fundamentally the same goal the ’582 Patent seeks to achieve. U.S. Patent No. 6,304,866 (2001) discusses a multiprocessing system employing on-demand and incremental sub-task allocation, further demonstrating that the concept of dynamically segmenting data was already well known. The notion that file processing can be subdivided logically and executed in a distributed manner was, therefore, a standard principle in computing prior to March 2002.

c. Conclusion

Thus, the ’582 Patent fails to introduce any novel aspect in how partitions are defined, stored, or processed. It relies on general functional language, describing the need to logically subdivide records without detailing any new approach or specific improvement over conventional systems. As of the March 2002 earliest possible priority date, the practice of splitting files for parallel execution—whether by byte ranges, record boundaries, or database partitioning schemes—was fully established in the art.

2. The ’582 Patent Claims Ineligible Subject Matter Under 35 U.S.C. § 101

The Asserted Claims (claims 1, 2, 5, and 7) of the ’582 Patent are invalid under 35 U.S.C. § 101 because they are directed to an abstract idea—specifically, the idea of dividing a large task into subtasks and processing them using available resources on a first-come/first-served basis—and lack any inventive concept that transforms this abstract idea into patent-eligible subject matter. The Asserted Claims of the ’582 Patent therefore fail at both steps of the Alice test and are invalid. See *Alice Corp. v. CLS Bank Int’l*, 573 U.S. 208 (2014).

The ’582 Patent, titled “Method for Managing Distributed Processing of Tasks in a Network,” claims a method for subtask processing in distributed computing systems. Claim 1—the only independent claim of the ’582 Patent—recites:

> 1. A method of effecting on **a preexisting input file** a computer-executable process **comprised of a plurality of subtasks**, the method comprising the steps of:
>
> (a) automatically determining file allocation and **logically subdividing records of said input file into a plurality of partitions**;
>
> (b) **distributing descriptions of** all of said **partitions to** each of a plurality of **subtask processors**[;]
>
> (c) **simultaneously executing** at least a respective **one of the subtasks** of the computer-executable process in each of at least some of said processors on a respective one of the partitions with each subtask reading and processing the respective partition so as to process the respective partition and produce respective subtask output and;
>
> (d) thereafter **repeating step (c)** in at least some of the subtask processors each **with another unprocessed partition on a first-come/first-served basis**; and
>
> (e) generating at least one output **combining all of the subtask outputs** and reflecting the processing of all of said subtasks.

The patent admits that these steps mostly were well known in the art, including partitioning data, distributing tasks, parallel processing, and aggregating results. Dkt#1-6 at 3:35-47, 3:67-4:15, 4:59-63. Partitioning (step a) relies on conventional techniques, such as byte ranges or track addresses, while subtask distribution (step b) employs generic mechanisms using control files; processing subtasks (step c) involves standard read-process-write operations, and aggregation (step e) is “of course” a conventional merging operation. *Id.* at 3:35-4:15, 4:59-63. The dependent Asserted Claims of the ’582 Patent fare no better. Claim 2 merely states that a separate processor may perform the partitioning and distribution—an obvious and conventional division of labor that lacks any inventive concept. Claim 5 recites that subtask outputs can be accumulated in arbitrary

order but offers no technical detail or mechanism for doing so—just a result. Claim 7 limits the input file to being stored on a network-attached storage device, which the patent itself identifies as a well-known technology.

The claimed first-come/first-served scheduling (step d) was argued during prosecution as the "primary difference" over the prior art. *See* Ex. A, Mar. 2, 2007 Remarks. According to the applicant, the prior art used "load information to distribute the load between processors," whereas:

> *With the instant invention … load information is not created* …. Instead, the load sharing is done as a byproduct of the fact that *the load-sharing process take parts of the load on a first-come/first-served basis*. A comparison would be to a road intersection where, according to the prior art, there is a traffic light that determines who can go when. The instant invention is more like such an intersection with a four-way stop so that the individual drivers determine who can go and when.

Id. The patentee's admission about the "primary difference" between the claimed invention and the prior art is critical in two ways. First, by pinpointing the "first available" assignment technique as the point of novelty, the inventors have defined what the claimed invention is "directed to" for purposes of the *Alice* Step 1 inquiry. *See Affinity Labs of Tex., LLC v. DIRECTV, LLC*, 838 F.3d 1253, 1257–58 (Fed. Cir. 2016) ("The 'abstract idea' step of the inquiry calls upon us to look at the 'focus of the claimed advance over the prior art' to determine if the claim's 'character as a whole' is directed to excluded subject matter."). Second, by the simple comparison between the invention and the managing of traffic loads at a street intersection, the inventor acknowledged that his "invention" merely applies a longstanding method of organizing human activities to computers.

The methods described in the '582 Patent implement that abstract concept using generic computing components, such as processors and memory, which are standard elements in distributed systems. The claims use simple functional language to describe desired outcomes—partitioning, distributing, processing, scheduling, and aggregating—without detailing how these

operations are performed or improved. Consequently, the Asserted Claims of the ’582 Patent fail at both steps of the Alice test and are therefore invalid.

a. The Asserted Claims of the ’582 Patent recite an abstract scheduling technique.

The Asserted Claims of the ’582 Patent are directed to the abstract idea of dividing a large task into subtasks and processing them using available resources on a first-come/first-served basis. Claim 1 of the ’582 Patent—the only independent claim of the ’582 Patent—comprises five steps: (a) “logically subdividing records . . . into a plurality of partitions,” (b) distributing descriptions of those partitions to multiple “subtask processors,” (c) “simultaneously executing” at least one “subtask” on each of the subtask processors, (d) thereafter allocating any remaining “unprocessed partition” to the subtask processors “on a first-come/first-served basis,” and (e) aggregating “all of the subtask outputs” into a final combined output. Stripped of jargon, Claim 1 covers the basic concept of splitting up a task and distributing the work, then collecting the results.

Claim 1’s distributed task management approach is an abstract idea that humans have long practiced without computers; it is akin to breaking a large job into smaller tasks, handing those tasks out to a group of workers, giving each new work as they free up, and then assembling the final product. The practice of breaking up a large job into discrete tasks, passing out a first round of assignments to team members, instructing them to ask for a new assignment when finished, and then combining the results has been employed by humans since the building of the Egyptian pyramids. The Federal Circuit has consistently held that processes based on such fundamental organizational practices are abstract. *See, e.g.*, *Intellectual Ventures I LLC v. Capital One Bank (USA)*, 792 F.3d 1363, 1367 (Fed. Cir. 2015) (organizing, storing, and retrieving information held abstract); *Intellectual Ventures I LLC v. Symantec Corp.*, 838 F.3d 1307 (Fed. Cir. 2016)

(automatically organizing information into wanted and unwanted categories and discarding the unwanted information held abstract).

"[T]here is a critical difference between patenting a particular concrete solution to a problem and attempting to patent the abstract idea of a solution to the problem in general." *Electric Power Group, LLC v. Alstom S.A.*, 830 F.3d 1350, 1356 (Fed. Cir. 2016). The Asserted Claims of the '582 Patent fall on the latter side of that line: they seek to monopolize the general idea of a solution (parallel task processing with on-the-fly scheduling) rather than a concrete technological solution. The Asserted Claims of the '582 Patent do not improve computer technology or solve a specific technical problem in how computers operate but instead apply conventional and common-sense workload management ideas to distributed computing. Partitioning data, distributing tasks, processing in parallel, and aggregating results are standard operations in distributed computing systems. Dkt#1-6 at 3:35–4:15, 4:59–63. Simply executing a known business/workflow practice on generic computers is not a patentable improvement to those computers.

The '582 Patent's recitation of assigning work using first-come/first-served scheduling—a ubiquitous method of task processing akin to queue management (e.g., a line at a concession stand or a four-way stop)—demonstrates its abstract nature. Claim 1 applies this principle to parallel computer processing without offering any new technological innovation. Moreover, The Asserted Claims of the '582 Patent use abstract functional language to describe desired outcomes—such as "logically subdividing," "distributing," and "aggregating"—without detailing how these steps are performed. This kind of result-oriented claiming that specifies an outcome (efficient parallel processing) without limiting the claim to any particular innovative technique for achieving it is a hallmark of an abstract idea. Thus, the '582 Patent "merely applies a well-known idea using generic computers 'to the particular technological environment of the Internet.'"

Intellectual Ventures I LLC v. Symantec Corp., 838 F.3d 1307, 1314 (Fed. Cir. 2016). In *Two-Way Media*, the Federal Circuit held that reciting a series of steps to achieve a desired result, without specifying how those steps are performed, renders the claim abstract. *See Two-Way Media Ltd. v. Comcast Cable Commc'ns*, LLC, 874 F.3d 1329, 1337–38 (Fed. Cir. 2017) ("routing" and "accumulating records" held abstract and invalid). Even though the specification describes conventional methods for these operations, the Asserted Claims of the '582 Patent do not specify how data is partitioned, how partitioned subtasks are distributed, or how results are aggregated. Dkt#1-6 at 3:35–4:15, 4:59–63. Such high-level, results-oriented language underscores the claim's abstract nature. As the Federal Circuit noted in *Electric Power*, claims that focus on the outcome of data processing without specifying the means to achieve it are abstract and invalid. 830 F.3d at 1356.

IV argues that the Asserted Claims of the '582 Patent are not abstract because they are "directed to an improvement in data processing"—specifically claiming that using multiple computers in parallel "increases the speed of execution of processes and balances the load" on resources. Dkt#28 at 9-10. The claimed method only achieves these benefits by applying the abstract idea of task partitioning and parallel execution on generic computers, rather than by reciting a new technology. Improved speed and load balancing are expected results of running a workload in parallel; they are performance outcomes, not inventive technical means. The '582 Patent claims do not improve the internal operation of the computer processors or change how the network functions—they just use more computing power in a straightforward way. Merely accelerating an existing process via parallelization is akin to the scenario in S*AP America v. InvestPic*, where claims "selecting certain information, analyzing it using mathematical techniques, and reporting or displaying the results of the analysis" were held abstract. 898 F.3d

1161, 1167-1168 (Fed. Cir. 2018). Indeed, the claims of the ’582 Patent “fit into the familiar class of claims that do not ‘focus ... on [] an improvement in computers as tools, but on certain independently abstract ideas that use computers as tools.’” *Id.* at 1168 (quoting *Electric Power*, 830 F.3d at 1354). Furthermore, IV’s reliance on *Enfish, LLC v. Microsoft Corp.*, 822 F.3d 1327 (Fed. Cir. 2016), is misplaced. Unlike *Enfish*, where the claims improved database memory structure, the ’582 Patent does not specify any new hardware or improvement to system architecture—it merely applies a standard method of parallelization to a computing process.

Because the Asserted Claims of the ’582 Patent of the ’582 Patent are directed to a fundamental method for organizing and processing tasks, it falls squarely within the category of claims deemed ineligible under Step 1 of the *Alice* framework.

b. The ’582 Patent lacks an inventive concept.

As to *Alice* Step 2, The Asserted Claims of the ’582 Patent recite only conventional steps and generic components without introducing any meaningful technical improvements or innovations. The claim elements, individually and in combination, reflect routine operations in distributed computing, as explicitly acknowledged in the specification. Partitioning input data into subsets, distributing tasks to processors, and processing tasks in parallel were standard techniques for optimizing workload distribution at the time. ’582 Patent at 3:35-4:15, 4:59-63.

The first-come/first-served scheduling technique, likewise, is a well-established method for processing tasks based on availability, like the applicant’s example of the four-way stop sign. The Asserted Claims of the ’582 Patent “merely appl[y] [this] well-known idea using generic computers.” *Symantec*, 838 F.3d at 1314. The specification does not describe any modification, improvement, or adaptation of this scheduling technique to make it unique or unconventional in the context of distributed computing. The Asserted Claims of the ’582 Patent simply apply this known concept predictably to allocate unprocessed subtasks, a principle embedded in all multi-

threaded and distributed computing architectures, and offers no specific mechanisms or technical enhancements. Thus, The Asserted Claims of the ’582 Patent are “directed to a result or effect that itself is the abstract idea and merely invoke[s] generic processes and machinery” rather than “a specific means or method that improves the relevant technology.” *Yu v. Apple Inc.*, 1 F.4th 1040, 1043 (Fed. Cir. 2021). “What is claimed is simply a generic environment in which to carry out the abstract idea.” *Id.*

Confirming the routine nature of the claimed methods, both the specification and the Asserted Claims of the ’582 Patent rely entirely on generic computing components, such as processors, memory, and standard network architecture. Dkt#1-6 at 4:27–36; *Trinity Info Media, LLC v. Covalent, Inc.*, 72 F.4th 1355, 1364, 1366–67 (Fed. Cir. 2023) (generic computer components such as “processors” and “memory” insufficient to add an inventive concept). The patent does not propose any novel configurations or functionalities for these components but instead recites conventional “functions in general terms, without limiting them to technical means for performing the functions that are arguably an advance over conventional computer and network technology.” *Elec. Power*, 830 F.3d at 1351.

For example, Claim 1’s reliance on functional language—such as “automatically determining,” “logically subdividing,” “distributing,” “executing,” and “combining”—describes desired outcomes without specifying how those outcomes are achieved. It does not explain how data is partitioned into subsets, how subtasks are allocated, how unallocated tasks are managed, or how results are aggregated into a final output. Dkt#1-6 at 6:47–4:15, 4:59–63. This lack of specificity leaves the claim framed at a high level of abstraction, with no concrete implementation details that could transform the method into a patent-eligible application. The dependent Asserted Claims of the ’582 Patent fare no better. Claim 2 merely delegates partitioning and distribution to

another processor, without explaining how that processor performs the task. Claim 5 generically allows output in arbitrary order but lacks any technical detail on how that's achieved. Claim 7 limits the input file to network-attached storage—a conventional environment the patent admits was already well known.

Courts have consistently held analogous claims ineligible under Step 2 of the Alice framework. In *Content Extraction*, 776 F.3d at 1348, the court found "no 'inventive concept'" in the use of generic computer components to perform routine activities. Similarly, in *Symantec Corp.*, 838 F.3d at 1320, the Federal Circuit emphasized that for a computer-implemented invention to be patent-eligible, it must involve more than well-understood, routine, and conventional activities. Like the claims in these cases, the Asserted Claims of the '582 Patent merely apply abstract principles of task management to distributed computing using conventional techniques, which does not suffice to render it patent-eligible.

IV points to the patent's description of using heterogeneous computers and balancing load as evidence that the claims capture a technical innovation. This argument is unpersuasive. As detailed above, the combination of steps in the Asserted Claims of the '582 Patent are entirely conventional—they are the standard recipe for parallel processing (split, distribute, process, repeat, merge). There is no inventive coordination or unconventional synergy arising from the arrangement of these steps; each step does what one would normally expect, and together they achieve the expected outcome of parallel execution. Unlike in *CosmoKey*, where the claim recited a specific authentication method that was not routine, or *Enfish* where a new data structure improved computer functionality, the Asserted Claims of the '582 Patent simply assemble known techniques to carry out an abstract goal. 15 F.4th at 1098-1099; 822 F.3d at 1337. Combining conventional steps in a computer environment, without more, does not create an inventive concept.

IV emphasizes that the patent describes using multiple heterogeneous computers and optimizing execution, but those aspects were already familiar in distributed computing. *See* Section III.F.1 *supra*.

Viewed as a whole, the Asserted Claims of the ’582 Patent combine conventional steps in a predictable manner to achieve the abstract goal of managing distributed tasks. They offer no technological advancements or inventive concepts beyond the abstract idea itself. Accordingly, the ’582 Patent fails to meet the requirements for patent eligibility under 35 U.S.C. § 101.

G. U.S. Patent No. 8,352,584

1. State of the Art Relevant to the ’584 Patent in September 2010

By the earliest priority date of September 2010, every principle recited in the ’584 patent had already been disclosed and implemented in commercially available systems. The art had converged on provider-hosted, on-demand clusters with dedicated interconnects, mature out-of-band management, and well-developed tenant security models.

It was already well-established that high-performance-computing (HPC) capacity could be rented on-demand from third-party providers rather than purchased outright. IBM’s Supercomputing (later “Deep Computing”) on Demand service, first publicized in 2003, let industrial customers tunnel over VPN links into a provider-owned cluster and pay only for the cycles they consumed. Building on that model, Penguin Computing’s “Penguin On Demand” (POD) went live in August 2009, advertising bare-metal, InfiniBand-attached nodes that customers could reserve by the hour. These offerings demonstrate that provider-hosted, pay-per-use compute clusters were no longer novel by September 2010.

At the same time, public Infrastructure-as-a-Service clouds had begun courting tightly-coupled workloads. Amazon EC2 introduced “Cluster Compute” instances in July 2010, explicitly targeting MPI and other network-intensive applications while retaining the cloud’s API-driven

elasticity and customer-controlled security groups. By 2010, users could therefore assemble virtual HPC-style clusters inside a multi-tenant environment and manage their own connectivity and security.

Fine-grained, out-of-band node management was solved years earlier. IPMI 2.0, published 12 Feb 2004, defined standardized BMC commands for power cycling, sensor telemetry, and event logging—capabilities baked into virtually every server shipping by 2010. Researchers also addressed cluster-wide security monitoring; the NVisionCC project (2004) demonstrated process-behavior analytics that could flag anomalies across hundreds of nodes with negligible performance impact, providing a foundation for multi-tenant alerting.

On the hardware side, InfiniBand had already become the preferred fabric for performance-sensitive clusters: of the TOP500 supercomputers in 2009, 181 systems—well over one-third—used InfiniBand interconnects. Commodity adoption of low-latency, high-bandwidth fabrics therefore pre-dated the ’584 patent by at least a year.

Taken together, the prior art shows that—well before the ’584 patent’s priority date—customers could (1) lease tailor-sized clusters from remote providers, (2) self-provision virtual or physical nodes with mature automation tool-chains, (3) monitor and power-manage each server out-of-band, and (4) rely on InfiniBand for high-performance interconnects. Any alleged advances in the ’584 patent toward co-located, customer-specific clusters secured by dedicated gateways would have been, at most, an obvious aggregation of these already-known capabilities.

2. The ’584 Patent Claims Ineligible Subject Matter Under § 101

The ’584 Patent, titled *System for Hosting Customized Computing Clusters*, claims a system for hosting computing clusters for use by clients. The purported problem is a logistical challenge, not a technological one: while “multiple cluster systems” were already known and

conventional, they were "typically limited" because "clients are required to host and manage the clusters that are located on their site or in their facilities." '584 Patent at 4:60–5:2, 5:19–21.

As its proposed solution, the patent describes outsourcing cluster management by providing a "hosted cluster system" located remotely from the client. *Id.* at 5:22–25. Clients can "access their hosted cluster from a remote location via … the Internet or other network," allowing them to offload the burden of on-site infrastructure. *Id.* at 4:25–27. The patent frames the invention as solving common problems associated with managing computer clusters by hosting computer clusters for clients using "a network for communications with a corresponding client and monitoring equipment and/or software modules." *Id.* at 4:53–58. It characterizes the system as one that provides clients with the "computational assets or power" they need "while not presenting an unacceptable burden on the clients' resources." *Id.* at 2:52–56.

The "present invention" is described as "hosting a plurality of clusters that are each configured for a particular task … and optionally providing for configuration, access control, and monitoring." *Id.* at 2:64–3:3. But the only distinction claimed over conventional clusters is location: the "cluster systems of the invention … are physically provided at one or more locations that are remote from the processing user or client's facilities." *Id.* at 4:19–23.

Claim 1, the only claim referenced or charted in the Complaint, recites a generic system architecture implementing this outsourcing model:

> 1. A computer system, comprising:
>
> a private communications network linked to a public communications network;
>
> a first cluster … in a first configuration … linked to the private communications network;
>
> a second cluster … in a second configuration … linked to the private communications network;
>
> a monitoring system …;

with additional limitations requiring communications isolation, defining clusters as "high performance," and linking each cluster through respective gateways.

The terms in claim 1 are defined broadly and generically. The specification makes clear that the invention extends to "any particular type of cluster or to particular hardware and/or software components." *Id.* at 10:22–25. The term "configuration" encompasses virtually every conventional aspect of cluster design, including "the physical components," "the topology of the cluster," and "any clustering software utilized to manage the cluster." *Id.* at 10:50–58.

Similarly, the "monitoring system" is described as relying on off-the-shelf tools such as the Intelligent Platform Management Interface (IPMI) and Simple Network Management Protocol (SNMP). *Id.* at 7:53–62. The patent does not disclose or claim any improvement to the clusters themselves, the computing resources, the network, or the monitoring systems; it merely assembles known components in a conventional arrangement.

a. Claim 1 Is Directed to a Business Idea.

Claim 1 of the '584 Patent is directed to the abstract idea of offloading computing tasks to remote clusters and monitoring them—a logistical or business goal, not a technological improvement. The supposed advance of hosting clusters remotely is framed in the patent as a solution to reduce clients' infrastructure costs, not a technical enhancement. '584 Patent at 1:39–43. Claim 1 recites only a system that receives a client task over a public network and executes it using remote clusters linked by conventional networking components.

The Federal Circuit has consistently held that "communicating requests to a remote server and receiving communications from that server" is an abstract idea. *Bridge and Post, Inc. v. Verizon Commc'ns, Inc.*, 778 F. App'x 882, 892 (Fed. Cir. 2019) (quoting *ChargePoint, Inc. v. SemaConnect, Inc.*, 920 F.3d 759, 766–67 (Fed. Cir. 2019)); *see also BuySafe, Inc. v. Google, Inc.*, 765 F.3d 1350, 1355 (Fed. Cir. 2014) ("That a computer receives and sends information over a

network … is not even arguably inventive."). Just like in *ChargePoint*, where adding network communications to known systems did not render the claims eligible, claim 1's functional recitation of "performing a client task," "monitoring operations," and "reporting the state of the cluster" merely describes abstract outcomes without concrete technological solutions.

Similarly, in *Two-Way Media*, the Federal Circuit held claims invalid where they recited functional results—"converting," "routing," and "monitoring"—without any technological implementation, because the claims simply relied on a generic network architecture performing routine tasks. 874 F.3d at 1337–38. The '584 Patent's claim 1 is no different: it describes using standard hardware to execute client tasks over a network without any improvement to the functionality of the clusters or networks themselves.

The generic monitoring elements of the claim likewise fail to impart eligibility. Claim 1's monitoring system simply checks for problems and reports them using conventional tools like SNMP and IPMI—off-the-shelf technologies that the patent admits are standard. '584 Patent at 7:53–62. This is akin to *InvestPic*, where the Federal Circuit found that claims focused on collecting, analyzing, and reporting information using standard computers were abstract and lacked any technological improvement. 898 F.3d at 1167–68. Because claim 1 does not improve how computers or networks function, but instead recites a generic use of existing systems to carry out an abstract hosting and monitoring scheme, it fails *Alice* step 1.

b. Claim 1 Lacks an Inventive Concept.

Claim 1 of the '584 Patent also fails *Alice* step 2 because it uses only generic computer components to perform conventional functions. The specification confirms that all components of

claim 1 are standard. The system includes a "public communications network,"[4] a "private communications network," two computing clusters, and a monitoring system. But none of these elements are novel or unconventional. The "clusters" are conventional computing clusters made up of processing nodes, shared storage, and standard networking.

The monitoring system fares no better. It consists of two main components implemented using existing, off-the-shelf technologies: the IPMI and SNMP—both longstanding, conventional tools for monitoring system health. '584 Patent at 7:53–62. Their inclusion confirms the absence of any technological advance. The use of such "off-the-shelf, conventional computer, network, and display technology" cannot confer patent eligibility. *Elec. Power Grp.*, 830 F.3d at 1355; *see also Two-Way Media*, 874 F.3d at 1339 (invalidating claims relying on "conventional computer and network components operating according to their ordinary functions."). Claim 1 fails *Alice* step 2 because it merely uses standard clusters and networks to perform ordinary hosting and monitoring tasks.

The '584 Patent does not identify any non-conventional arrangement of these elements. It claims a routine setup in which two generic clusters are linked to an intranet, receive tasks from a public network, and use standard monitoring tools. That configuration reflects a typical managed data center architecture—not an inventive concept.

In addition, claim 1 does not recite any inventive combination of elements. Although an inventive concept can sometimes arise from a "non-conventional and non-generic arrangement of known, conventional pieces," *Bascom Glob. Internet Servs., Inc. v. AT&T Mobility LLC*, 827 F.3d

[4] The "public communications network" is generally understood by the specification to mean the Internet. *E.g.*, '584 Patent at 3:8–10, 4:23–27. In contrast, the "private communications network" is a typical intranet using established protocols such as "Gigabit Ethernet," "10 Gigabit Ethernet," "Infiniband™," or "Myrinet™." '584 Patent at 7:41–52.

1341, 1350 (Fed. Cir. 2016), the ordered combination here is conventional: computing clusters communicating over standard networks, monitored using known tools. This mirrors the type of generic implementation the Federal Circuit repeatedly finds ineligible.

As in *Elec. Power*, the claims "do not require any non-conventional and non-generic arrangement of known, conventional pieces," and merely perform generic functions on standard computer components. 830 F.3d at 1355. *ChargePoint* confirms the same principle: adding generic networking to existing systems does not impart inventiveness. 920 F.3d at 774–75. Claim 1 does not improve how clusters, networks, or monitoring systems function; it simply applies conventional tools in their ordinary roles to achieve abstract results without any "improvement to the functioning of the computer itself." *Alice*, 573 U.S. at 225.

Because Claim 1 lacks any inventive concept, it fails both steps of the Alice inquiry and is not directed to patent-eligible subject matter.

H. U.S. Patent No. 7,712,080

1. State of the Art Relevant to the '080 Patent in May 2003

By May 2003, the computer-science community had already accumulated nearly a decade of experience with moving computations to where data reside and orchestrating parallel work across clusters and nascent grids. Researchers had engineered mobile-agent frameworks that could carry a running program's state from one host to another, perfected highly tuned message-passing libraries for high-performance computing (HPC), and begun shipping commercial grid toolkits that automatically placed jobs near large datasets.

Mobile-agent systems formed the most direct antecedents of later "self-migrating thread" proposals. Early platforms such as General Magic's Telescript (1994) demonstrated full stack capture and redeployment between Telescript engines. IBM's Aglets, released in 1997 by its Tokyo lab, popularized Java-based agent migration via a simple dispatch call. European projects—

including MOLE from TU Dresden and the Ara, Grasshopper, and Odyssey families—expanded the design space with alternative security policies and runtime services. In the United States, D'Agents (evolved from Agent Tcl) offered strong mobility across multiple languages, coupling migration with public-key authentication and resource quotas. By 2003, therefore, the community considered strong code mobility feasible, albeit still experimental outside academia.

While mobile agents explored fine-grained mobility, mainstream HPC relied on message passing and distributed-shared-memory abstractions. MPI-1.1 (1994) and MPI-2 (1997) had become the de-facto standards, with vendor implementations and mature debuggers being widely available. Distributed-shared-memory prototypes such as TreadMarks, Munin, and Midway provided transparent shared variables on commodity clusters, but their coherence traffic often limited scalability. Complementing these were data-parallel or task-parallel languages and runtimes: High-Performance Fortran 2.0 (1997) allowed compilers to distribute arrays with simple directives; MIT's Cilk-5 employed work-stealing for recursive parallelism; and Illinois's Charm++ scheduled migratable objects to balance load dynamically. Berkeley's Active Messages work, dating to 1992, showed how tiny handler functions embedded in network packets could overlap computation and communication—an early nod to sending code with data rather than moving bulk datasets.

At the same time, grid-computing toolkits started to unite these ideas at job granularity. The Globus Toolkit 2.0, released in early 2002, standardised secure job submission (GRAM), high-performance data transfer (GridFTP), and information services that let users co-allocate processors near storage. Wisconsin's Condor-G brokered jobs across administrative domains while respecting local policies, effectively automating the decision to "move work to data." Commercial vendors—including IBM and Platform Computing—began shipping production grid

stacks, and popular-press coverage in outlets such as Wired heralded the grid as the next computing revolution.

In sum, by May 2003 the building blocks that the ’080 Patent characterizes—mobile execution, shared-variable abstractions, and conversion of sequential code into parallel execution—were already the subject of active research, widely published demonstrations, and commercial deployment.

2. The ’080 Patent Claims Ineligible Subject Matter Under § 101

The ’080 Patent, titled *Systems and Methods for Parallel Distributed Programming*, describes what it terms “navigational programming.” ’080 Patent at 3:15. Independent Claim 1, the only asserted independent claim, recites three functional steps: (i) establishing a “distributed shared variable” across multiple memories; (ii) developing at least one “distributed sequential computing” (DSC) program that accesses the variable; and (iii) upon occurrence of an “intermediate condition,” spawning child DSC programs that “self-migrate” to relevant data, thereby creating a “distributed parallel computing” (DPC) program. Dependent Claims 3–6 add limitations concerning the environment in which these steps occur (e.g., among multiple processors, memories, nodes, or threads). Claim 9 recites the same concept as a system, and Claims 17 and 18 specify operation across a distributed shared memory system.

The asserted claims are directed to the abstract idea of organizing and coordinating software tasks. Specifically, the claims recite establishing a logical shared variable, developing a program that accesses it, and spawning additional programs when a condition occurs. The claims do not describe how to implement any of these functions: they provide no algorithm for creating a distributed variable, detecting an intermediate condition, spawning a process, or migrating code. Instead, they invoke functional results using broad terms such as “establishing,” “developing,” “spawning,” and “transforming” without supplying technical detail. Because the asserted claims

utilize generic computer hardware and fail to disclose any technological improvement to computer hardware, networking, or memory structures, the claims fail both steps of the *Alice* test and are ineligible under 35 U.S.C. § 101.

a. The asserted claims are directed to an abstract idea.

Looking to the ’080 Patent’s claim language, specification, and claimed advance over the prior art, *BSG Tech LLC v. BuySeasons, Inc.*, 899 F.3d 1281, 1287–88 (Fed. Cir. 2018), the asserted claims of the ’080 Patent, issued pre-*Alice*, are ineligible under 35 U.S.C. § 101. Specifically, the ’080 patent is directed to the abstract idea of moving a program and splitting it into parallel tasks using conventional computer hardware.

Claim 1, the only asserted independent claim, instructs a developer to (i) “establish” a single logical variable spread across memories, (ii) “develop” a sequential program that reads it, and (iii) “transform” that program by “spawning” a child program when an “intermediate condition” arises so the parent and child can run in parallel. The claim never specifies *how* to create a distributed variable, detect the condition, spawn a process, or migrate code; it merely demands the result—parallel processing—leaving the underlying engineering entirely to the practitioner. Terms like “establishing,” “developing,” “spawning,” and “transforming” are invoked with no supporting algorithm or data structure.

As the Federal Circuit has emphasized, there is an “important common-sense distinction between ends sought and particular means of achieving them, between desired results (functions) and particular ways of performing them.” *Elec. Power Grp., LLC v. Alstom S.A.*, 830 F.3d 1350, 1356 (Fed. Cir. 2016). Claim 1 falls into the former category. It does not describe *how* “the at least one distributed parallel computing program concurrently uses the at least one distributed sequential computing program and the at least one spawned child distributed sequential computing program to perform parallel processing”—it merely claims the result of doing so. Such results-oriented

drafting is abstract. *See ChargePoint, Inc. v. SemaConnect, Inc.*, 920 F.3d 759, 769 (Fed. Cir. 2019) ("Even a specification full of technical details" may conclude with claims on an "abstract idea.").

Claims 3–6 cannot save the '080 Patent from abstraction because they do nothing except require that the abstract scheme run "among a plurality of memories," "across multiple processors," "using multiple threads," or "across multiple nodes." Implementing an abstract idea on routine, off-the-shelf components cannot save it from abstraction. Likewise, Claims 17 and 18 merely restate that the program runs "across a distributed shared memory system"—a classic field-of-use restriction that does nothing to change the abstract nature of the claims.

b. The claims add no "inventive concept."

At *Alice* step two, the '080 patent adds nothing to the abstract concept beyond instructing practitioners to apply it using ***entirely conventional computing components and functions***. The asserted claims invoke only generic computer hardware elements—processors, memories, nodes, threads, and a distributed shared memory system. No claim recites a specific improvement to processor architecture, memory management, or network communication; instead, they rely on a standard distributed-system hardware to carry out the abstract scheme. Indeed, the '080 Patent proposes merely arranging known computing building blocks to perform their ordinary functions in a conventional environment, which the Federal Circuit has repeatedly held insufficient to supply an "inventive concept."

3. Conclusion

The asserted claims of the '080 Patent do not solve a technological problem; they merely describe an abstract method for structuring software development and executing parallel code on conventional computers. Claims 1, 3–6, 9, 17, and 18 are ineligible under 35 U.S.C. § 101.

I. U.S. Patent No. 11,032,000

1. State of the Art Relevant to the ’000 Patent in November 2019

As of November 2019, the state of the art in wireless communication systems included a range of techniques for managing uplink channel conditions, power control, and feedback mechanisms, particularly in systems operating under Frequency Division Duplexing (FDD) where uplink and downlink channels do not share reciprocity.

In 3GPP standards, user equipment (UE) commonly transmitted uplink control information over dedicated channels such as the Physical Uplink Control Channel (PUCCH) and Physical Random Access Channel (PRACH), depending on the scheduling context. In UMTS and WCDMA systems, features like the Physical Common Packet Channel (pCPCH) and Feedback Dedicated Physical Control Channel (F-DPCH) were used to support uplink access signaling and power control feedback from the base station. These features enabled the network to manage uplink power and access timing without the need for a dedicated uplink shared data channel.

Similarly, mechanisms for downlink feedback were in place through various control channels. LTE networks employed the Physical Downlink Control Channel (PDCCH) to deliver scheduling decisions and power control commands. These control channels often operated alongside shared data channels within a frame or subframe and were capable of delivering UE-specific information efficiently, including transmit power adjustments based on uplink channel measurements.

Systems incorporating support for half-duplex UEs were also known. In TDD and FDD systems, scheduling strategies were adapted to accommodate UEs that could not simultaneously transmit and receive. Techniques such as dynamic slot allocation, subframe configuration, and time-domain multiplexing were used to separate uplink and downlink transmissions. Fractionation

and subframe repetition strategies were proposed in LTE-A and LTE-A Pro to manage UE capability constraints and improve overall system efficiency.

The management of UE states through Radio Resource Control (RRC) mechanisms was also well established by 2019. For example, CELL_FACH and CELL_PCH sub-states in UMTS allowed for low-activity UEs to remain connected with reduced signaling overhead. These states enabled limited uplink transmissions without requiring fully active data channels and included procedures for quickly transitioning between low-power and high-activity modes depending on system demands.

In academic literature and industry publications, additional approaches were explored for enhancing uplink estimation and feedback in FDD systems. These included uplink-aided downlink channel estimation using long-term statistical properties of the wireless channel, such as channel covariance matrices, angle-of-arrival information, and delay spread analysis. These methods aimed to reduce the overhead of explicit CSI feedback by using uplink signals as a proxy for downlink conditions, particularly in massive MIMO systems.

Some proposed systems used separate pilot or beacon signals for channel sounding, especially in the context of non-reciprocal systems. However, these signals were generally embedded within the broader control or data transmission framework and were not necessarily allocated to timeslots distinct from the uplink shared channel. Similarly, control feedback based on those signals was delivered using existing downlink channels without the introduction of a new physical layer control channel structure.

By 2019, it was also common to multiplex control information within the same timeslot or resource block as shared data transmissions, particularly in CDMA- and OFDMA-based systems. Techniques such as time multiplexing, frequency division multiplexing, and code division

multiplexing were used to accommodate multiple channel types within the same transmission interval, allowing efficient use of spectrum.

In sum, the state of the art as of November 2019 included: (i) uplink signaling mechanisms that operated independently of user data; (ii) downlink control feedback channels that delivered power control and scheduling information; (iii) support for half-duplex UEs through dynamic slot configuration; (iv) RRC-managed UE sub-states enabling low-overhead connectivity; and (v) pilot- and beacon-based feedback systems using known uplink signal characteristics.

2. The ’000 Patent Claims Ineligible Subject Matter Under § 101

a. Background of the ’000 Patent

The ’000 patent frames a transitional problem: when a system that benefits from uplink–downlink reciprocity is operated in FDD spectrum, reciprocity is lost because the links are on different frequencies and may be separated by more than the channel’s coherence bandwidth; in high-mobility scenarios, the downlink–uplink timing offset can also exceed coherence time. The ’000 Patent’s claimed solution is to introduce a User Equipment (UE)-originated “uplink physical control signal” dubbed a “UL_Beacon,” ’000 Patent at 4:49–51, transmitted in time intervals when the UE is not sending data on the conventional psychical uplink shared channel (“PUSCH”), and a downlink “Physical Layer Control Channel” (“PLCCH”) on which the base station returns control information such as power-control bits derived from the UL_Beacon measurement. *Id.* at 5:5–19. The patent also discloses a generic computing implementation (Fig. 5), explaining that embodiments may be executed by general-purpose processors with functionality distributed arbitrarily among units, further confirming the conventional nature of the implementation. ’000 Patent at 7:59–8:62.

The purported “advance” identified in the ’000 Patent is not the introduction of any new hardware component, radio transceiver design, or signal-processing algorithm. Rather, the

specification makes clear that the claims merely rearrange when existing uplink and downlink control signals are sent. The so-called "UL_Beacon" is just a user-originated control signal transmitted when the UE is not already using the uplink shared channel, and the "PLCCH" is merely a downlink control channel carrying conventional feedback such as power-control bits. The patent concedes that "[t]hose skilled in the art will recognize that the operations of the various embodiments may be implemented using hardware, software, firmware, or combinations thereof, as appropriate" ('000 Patent at 7:44–47), and that functionality may be distributed arbitrarily among processors (*Id.* at 7:59–8:62). These admissions confirm that the claims do not require any unconventional hardware or signal-processing technique; they claim only an administrative scheduling idea for placing existing types of control and data transmissions into different timeslots.

b. The '000 Patent's Claims are Directed to an Abstract Idea

Properly characterized, the asserted claims are directed to the abstract idea of scheduling and relabeling conventional control and feedback transmissions between a user device and a base station. The claimed "UL_Beacon" is simply a control signal transmitted when the UE is idle on the uplink shared channel, and the "PLCCH" is a downlink feedback channel carrying conventional information such as power-control bits. Independent Claim 1, for example, recites a system (UE) that can (i) receive resource-allocation information for an "uplink physical signal" on resources separate from PUSCH, (ii) send data on PUSCH in assigned intervals, (iii) send the uplink physical signal when not sending data, and (iv) receive control information on a downlink control channel derived from that uplink signal. Stripped of terminology, Claim 1 is directed to the functional idea of deciding *when* to transmit known pilot signals and feedback bits, without reciting any new waveform, coding, or protocol. Independent Claim 13 mirrors these same elements in method form and likewise contains no concrete technical solution.

The specification confirms that the purported advance is not a technical solution at the radio-signal-processing level, but rather an administrative separation of control and data transmissions and a scheduling/bit-budget framework for delivering feedback. The specification recognizes that there are "a large number of possibilities" for the UL_Beacon/PLCCH arrangement, that more than one of each can be used per frame "if the feedback update rate is required to be faster," or fractionated for slower rates, and that timeslot arrangement "may be adjusted" for half-duplex terminals. *Id.* at 5:44–61, 6:18–27. The specification likewise concedes that "[t]hose skilled in the art will recognize that the operations of the various embodiments may be implemented using hardware, software, firmware, or combinations thereof, as appropriate." *Id.* 7:44–47. By conceding that the claimed system and method may be implemented using any variety of hardware and software in combination, the '000 Patent effectively recognizes that the alleged improvement over the prior art captured by the claimed system and method is the result of an abstract data transmission concept, not a specific technological improvement.

Thus, the '000 Patent claims fall squarely within the *Electric Power*/*Two-Way Media* line of abstraction. They recite functional objectives—receive resource-allocation information, send data on PUSCH in assigned intervals, send the uplink physical signal in an interval when it is not sending data, and receive control information on a physical control channel—implemented using conventional hardware and without claiming any particular means for achieving the results. The asserted claims are therefore abstract under *Alice* step 1. *See First-Class Monitoring, LLC v. United Parcel Serv. of Am., Inc.*, 389 F. Supp. 3d 456, 461, 467 (E.D. Tex. 2019) (claims directed to "requesting, collecting, and transmitting data using generic computers and conventional SMS protocols" held abstract).

c. The ’000 Patent’s Claims Lack an Inventive Concept

The asserted claims fare no better at *Alice* step 2, as they lack an inventive concept when considered either individually or as an ordered combination. To transform an abstract idea into patent-eligible subject matter, a claim must recite an “inventive concept”—something “significantly more” than the ineligible concept itself. *Alice*, 573 U.S. at 217–18. “[C]onventional and well-understood techniques” do not qualify. *BSG Tech*, 899 F.3d at 1290–91. Nor does “computer implementation” supply an inventive concept if the process can be “carried out in existing computers long in use.” *Alice*, 573 U.S. at 222. Here, the claimed system and method invoke standard networking components—“receiver,” “processor,” “transmitter,” “base station,” “signal[s],” “channel[s]”—operating as expected to convey data. Indeed, the specification concedes that the claimed system and method can be realized by a myriad of general-purpose processors and software, foreclosing any argument for inventiveness. *See* ’000 Patent at 7:59–8:62.

The ’000 Patent’s own specification confirms that Claim 1’s recited components—a “user equipment” (“UE”), “base station,” “uplink shared channel,” “uplink physical signal,” and “physical control channel”—are all standard elements of conventional UMTS/LTE wireless networks. See ’000 Patent at 3:33–58, 5:45–67. The “uplink physical signal” is merely a control signal transmitted in a timeslot, while the PLCCH returns power-control or channel-condition feedback. *Id.* at 5:64–6:24. These are longstanding mechanisms for uplink channel quality reporting and power control in 3GPP systems, implemented using known radio hardware and timeslot allocations.

Nothing in Claim 1 changes the way these components operate; it simply uses them “to achieve the abstract result” of exchanging information between a terminal and a base station. *ChargePoint, Inc. v. SemaConnect, Inc.*, 920 F.3d 759, 774 (Fed. Cir. 2019). The claim does not

recite a new protocol, modulation, or physical-layer technology—it relies on routine frame structures, time-multiplexed control/data channels, and predetermined bit allocations for feedback, all disclosed in existing 3GPP specifications.

Nor does the ordered combination add anything inventive. The claimed sequence—(1) receive resource-allocation information, (2) transmit data in assigned intervals, (3) in other intervals, send a beacon signal, and (4) receive control information—is simply a conventional time-division communication loop. Such "routine and conventional" coordination of transmission and feedback is a basic form of network communication and cannot supply an inventive concept. *In re TLI Commc'ns LLC Patent Litig.*, 823 F.3d 607, 615 (Fed. Cir. 2016).

Ultimately, Claim 1 covers the generic use of known wireless components in their expected arrangement to perform well-understood channel-estimation and feedback functions—exactly the type of "apply it with conventional steps" claiming the Supreme Court rejected in *Alice*. Because Claim 1 recites only standard wireless networking elements performing their ordinary roles, without any asserted nonconventional configuration or technical improvement, it lacks the requisite inventive concept under step two of *Alice*.

d. Conclusion

In sum, Claims 1–6 and 13–18 of the '000 Patent are directed to the abstract idea of "collecting information, analyzing it, and displaying certain results of the collection and analysis." *Elec. Power Grp.*, 830 F.3d at 1354. Further, because the claims utilize conventional hardware and software operating in its ordinary manner, the claims lack an inventive concept when considered either individually or as an ordered combination. The asserted claims are therefore ineligible under 35 U.S.C. § 101.

IV. THE '844 PATENT IS INVALID UNDER 35 U.S.C. §§ 102 AND/OR 103

A. The '844 Patent Priority Date

The asserted claims of the '844 Patent have a filing date of February 21, 2007. Application No. 11/709,477 (the '477 Application), which matured into the '844 Patent, was filed on February 21, 2007 and was a continuation-in-part of Application No. 11/395,816 (filed March 30, 2006) (now Patent No. 7,721,282) (the '816 Application), which was a continuation-in-part of Application No. 11/026,622 (filed December 20, 2004) (now abandoned) (the '622 Application). Plaintiff's Infringement Contentions allege that the asserted claims of the '844 Patent are entitled to a priority date of December 30, 2004, which is the filing date of the '622 Application.

However, none of the '844 Patent claims are entitled to either priority date, as the '816 and '622 Applications never mention caching or indexing – at least one of which is expressly recited in each claim of the '844 Patent. '844 Patent, 10:55- 14:17. *See Studiengesellschaft Kohle v. Shell Oil Co.*, 112 F.3d 1561, 1564 (Fed. Cir. 1997). Applicants even admitted that "indexing and indexing results are not discussed anywhere within Nguyen" (which matured from a continuation-in-part of the '622 Application). *See* '477 Application, Amendment After Non-Final Rejection dated February 21, 2007. Therefore, the asserted claims of the '844 Patent are only entitled to a filing date of February 21, 2007.

B. Identification of Prior Art that Anticipates or Renders Obvious the Asserted Claims of the '844 Patent

Southwest contends that the prior art references listed below and charted in Exhibits 844-1 – 844-24 anticipate and/or render obvious, alone or in combination, one or more of the asserted claims of the '844 Patent.

Prior Art Reference	Publication Date
"Optimizing the Migration of Virtual Computers," Association for Computing Machinery, Special Interest Group on Operating Systems, Operating Systems Review, Proceedings of the 5th Symposium on Operating Systems Design and Implementation, Volume 36, Issue S1 ("Sapuntzakis")	Published December 31, 2002 This reference is prior art under at least Pre-AIA 35 U.S.C. § 102(b).
U.S. Patent No. 7,089,300 ("Birse")	Filed – October 19, 1999 Issued – August 8, 2006 This reference is prior art under at least Pre-AIA 35 U.S.C. § 102(e).
U.S. Patent Application Publication No. 2005/0283597 ("Holzmann")	Filed – June 22, 2004 Published – December 22, 2005 This reference is prior art under at least Pre-AIA 35 U.S.C. § 102(b) and § 102(e).
U.S. Patent Application Publication No. 2002/0034105 ("Kulkarni")	Filed – January 8, 2001 Published – March 21, 2002 This reference is prior art under at least Pre-AIA 35 U.S.C. § 102(b) and § 102(e).
U.S. Patent Application Publication No. 2005/0004925 ("Stahl")	Filed – May 7, 2004 Published – January 6, 2005 This reference is prior art under at least Pre-AIA 35 U.S.C. § 102(b) and § 102(e).
U.S. Patent Application Publication No. 2006/0168154 ("Zhang")	Filed – November 19, 2004 Published – July 27, 2006 This reference is prior art under at least Pre-AIA 35 U.S.C. § 102(e).
U.S. Patent No. 8,001,085 ("Kiselev")	Filed – November 25, 2003 Issued – August 16, 2011

Prior Art Reference	Publication Date
	This reference is prior art under at least Pre-AIA 35 U.S.C. § 102(e).
U.S. Patent Application Publication No. 2004/0172509 ("Takeda")	Filed – June 23, 2003 Published – September 2, 2004 This reference is prior art under at least Pre-AIA 35 U.S.C. § 102(b) and § 102(e).
U.S. Patent No. 6,671,782 ("Menon")	Filed – March 29, 2000 Issued – December 30, 2003 This reference is prior art under at least Pre-AIA 35 U.S.C. § 102(b) and § 102(e).
U.S. Patent Application Publication No. 2003/0236850 ("Kodama")	Filed – March 21, 2002 Published – December 25, 2003 This reference is prior art under at least Pre-AIA 35 U.S.C. § 102(b) and § 102(e).
EP Patent No. EP0604013 ("Nelson")	Filed – November 15, 1993 Issued – February 20, 2002 This reference is prior art under at least Pre-AIA 35 U.S.C. § 102(b).
PCT Application Publication No. WO 2006/074869 ("Bayer")	Filed – January 4, 2006 Published – July 20, 2006 This reference is prior art under at least Pre-AIA 35 U.S.C. § 102(b) and § 102(e).
Shrira, Liuba et al., "Thresher: an efficient storage manager for copy-on-write snapshots," ATEC '06: Proceedings of the annual conference on USENIX '06 Annual Technical Conference (Shrira)	Published at least by May 30, 2006 This reference is prior art under at least Pre-AIA 35 U.S.C. § 102(a).
Laros, James H. et al., "Implementing Scalable Disk-Less Clusters Using The	Published at least by January 2003 Retrieved from: https://www.researchgate.net/publication/

Prior Art Reference	Publication Date
Network File System (NFS)," ("Laros")	255223070_Implementing_scalable_disk-less_clusters_using_the_Network_File_System_NFS This reference is prior art under at least Pre-AIA 35 U.S.C. § 102(b).
U.S. Patent Application Publication No. 2004/0153639 ("Cherian")	Filed – February 5, 2003 Published – August 5, 2004 This reference is prior art under at least Pre-AIA 35 U.S.C. §§ 102(b) and (e).
U.S. Patent Application Publication No. 2007/0057958 ("Bucher")	Filed – August 9, 2006 Published – March 15, 2007 This reference is prior art under at least Pre-AIA 35 U.S.C. § 102(e).
U.S. Patent No. 7,197,608 ("Mikuma")	Filed – July 12, 2004 Issued – March 27, 2007 This reference is prior art under at least Pre-AIA 35 U.S.C. § 102(e).
U.S. Patent Application Publication No. 2005/0283575 ("Kobayashi")	Filed – August 13, 2004 Published – December 22, 2005 This reference is prior art under at least Pre-AIA 35 U.S.C. §§ 102(b) and (e).
U.S. Patent No. 6,453,334 ("Vinson")	Filed – June 16, 1998 Issued – September 17, 2002 This reference is prior art under at least Pre-AIA 35 U.S.C. §§ 102(b) and (e).
U.S. Patent No. 5,930,513 ("Taylor")	Filed – June 6, 1996 Issued – July 27, 1999 This reference is prior art under at least Pre-AIA 35 U.S.C. §§ 102(b) and (e).
U.S. Patent Application Publication No. 2002/0002660 ("Malcolm")	Filed – July 31, 1998 Published – January 3, 2002

Prior Art Reference	Publication Date
	This reference is prior art under at least Pre-AIA 35 U.S.C. §§ 102(b) and (e).
U.S. Patent Application Publication No. 2002/0091763 ("Shah")	Filed – May 15, 2001 Published – July 11, 2002 This reference is prior art under at least Pre-AIA 35 U.S.C. §§ 102(b) and (e).
U.S. Patent No. 7,398,382 ("Rothman")	Filed – December 29, 2004 Issued – July 8, 2008 This reference is prior art under at least Pre-AIA 35 U.S.C. § 102(e).
U.S. Patent No. 6,317,826 ("McCall")	Filed – October 19, 1998 Issued – November 13, 2001 This reference is prior art under at least Pre-AIA 35 U.S.C. §§ 102(b) and (e).
Southwest Airlines NetApp System – NetApp/Southwest	At least as early as 2002 This reference is prior art under at least Pre-AIA 35 U.S.C. §§ 102(a) or (g).
VMware Systems - VMware	At least as early as 2001 This reference is prior art under at least Pre-AIA 35 U.S.C. §§ 102(a) or (g).

Plaintiffs assert claims 7 and 11 of the '844 Patent against Southwest in this lawsuit. These claims are invalid because the '844 Patent fails to meet one or more of the requirements for patentability. The individual bases for invalidity are provided below and in Exhibits 844-1 – 844-24. Each of the prior art references, the underlying work, and/or the underlying apparatus or method qualifies as prior art under one or more sections of Pre-AIA 35 U.S.C. §§ 102 and/or 103.

In an effort to focus the issues, Southwest has cited representative portions of identified references, even where a reference may contain additional disclosures or support for a particular claim element. Each and every disclosure of the same limitation in the same reference is not

necessarily identified. In addition, persons of ordinary skill in the art generally read a prior art reference as a whole and in the context of other publications and literature and in the context of their knowledge as persons of ordinary skill in the art. Thus, to understand and interpret any specific statement or disclosure within a prior art reference, such persons would rely on other information within the reference, along with other publications and their general scientific knowledge and experience in the field. Thus, each prior art reference identified herein should be understood in the context of the reference itself in conjunction with anything incorporated by reference or described as relevant technology by the reference, any documents that are referred to for further understanding by the reference, any product embodying the reference, and any testimony by those with knowledge of the reference, such as the named authors and inventors. Southwest may rely upon uncited portions of the prior art references and on other publications and expert testimony to provide context, and as aids to understanding and interpreting the portions that are cited. Southwest may also rely on uncited portions of the prior art references, other disclosed publications, and the testimony of experts to establish that a person of ordinary skill in the art would have been motivated to modify or combine certain of the cited references so as to render the claims obvious.

Some or all of the asserted claims of the '844 Patent are invalid as anticipated under Pre-AIA 35 U.S.C. § 102 in view of certain ones of the prior art references identified above as detailed in the claim charts included in Exhibits 844-1 – 844-24, which identify specific examples of where each limitation of the asserted claims of the '844 Patent is found in the prior art references. As explained above, the cited portions of prior art references identified in the attached claim charts are exemplary in nature and representative of the content and teaching of the prior art references,

and should be understood in the context of the reference as a whole and as they would be understood by a person of ordinary skill in the art.

To the extent any item of prior art cited above is deemed not to disclose, explicitly or inherently, any limitation of an asserted claim of the '844 Patent, Southwest reserves the right to argue that any difference between that prior art and the corresponding patent claim would have been either inherent in the art or obvious to a person of ordinary skill in the art, even if Southwest has not specifically denoted that the art is to be combined with the knowledge of a person of ordinary skill in the art.

To the extent Plaintiffs argue that any limitation of the asserted claims of the '844 Patent is not explicitly disclosed by an item of prior art identified above and in Exhibits 844-1 – 844-24, any purported differences are such that the claimed subject matter as a whole would have been obvious to one skilled in the art at the time of the alleged invention, in view of the state of the art and knowledge of those skilled in the art. The item of prior art would, therefore, render the relevant claims invalid as obvious under Pre-AIA 35 U.S.C. § 103.

To the extent any of the foregoing references are found not to anticipate the asserted claims of the '844 Patent, the foregoing references render the asserted claims obvious, either alone or in combination with one or more of the other references identified above. One of ordinary skill in the art would have been motivated to combine the various references cited herein so as to disclose each and every limitation of the asserted claims of the '844 Patent.

The prior art identified in Exhibits 844-1 – 844-24 renders one or more asserted claims of the '844 Patent obvious when the references are read alone or in combination with one or more of each other and/or when read in view of the state of the art and knowledge of those skilled in the art.

To the extent that Plaintiff argues that any asserted claim of the '844 Patent is not disclosed or rendered obvious by any reference charted in Exhibits 844-1 – 844-24, the asserted claims nevertheless would have been obvious in light of one or more other references charted in Exhibits 844-1 – 844-24 and in view of the knowledge, experience, and understanding of persons of ordinary skill in the art.

Each and every reference identified is also relevant to the state of the art at the time of the alleged invention. Any of the references disclosed above may be combined with one another to render obvious (and therefore invalid) each of the asserted claims of the '844 Patent. Southwest may rely upon a subset of the above identified references, or all of the references identified above, including all references in charted in Exhibits 844-1 – 844-24, for purposes of obviousness depending on the Court's claim construction, positions taken by Plaintiffs during this litigation, and further investigation and discovery.

1. Example Combinations of the Prior Art

The table below provides an identification of exemplary combinations of prior art references that, based on Southwest's present understanding of Plaintiff's Infringement Contentions and apparent reading of the claims, render obvious one or more of the asserted claims of the '844 Patent. The combinations of references identified below are non-exhaustive, and additional examples are apparent from other combinations of references charted in Exhibits 844-1 – 844-24. Although certain references charted in Exhibits 844-1 – 844-24 are listed variously in the left or right column below, Southwest does not thereby imply any restriction as to which reference is primary and which reference is secondary in such a combination. Southwest reserves the right to rely on either identified reference in the identified combinations as a primary and/or secondary reference.

Exhibit	Reference	Combination Reference(s)
844-1	Sapuntzakis	Holzmann, Nelson, Stahl, and/or Kulkarni, and/or one or more references as charted in Exhibits 844-1 – 844-24
844-2	Birse	Holzmann, Nelson, Stahl, and/or Kulkarni, and/or one or more references as charted in Exhibits 844-1 – 844-24
844-3	Kulkarni	Holzmann, Nelson, and/or Stahl, and/or one or more references as charted in Exhibits 844-1 – 844-24
844-4	Stahl	Holzmann, Nelson, Sapuntzakis, Birse, and/or Kulkarni, and/or one or more references as charted in Exhibits 844-1 – 844-24
844-5	Zhang	Holzmann, Nelson, Stahl, Sapuntzakis, Birse, and/or Kulkarni, and/or one or more references as charted in Exhibits 844-1 – 844-24
844-6	Kiselev	Holzmann, Nelson, and/or Stahl, and/or one or more references as charted in Exhibits 844-1 – 844-24
844-7	Takeda	Holzmann, Nelson, and/or Stahl, and/or one or more references as charted in Exhibits 844-1 – 844-24
844-8	Menon	Holzmann, Nelson, Stahl, Sapuntzakis, Birse, and/or Kulkarni, and/or one or more references as charted in Exhibits 844-1 – 844-24
844-9	Kodama	Holzmann, Nelson, Stahl, Sapuntzakis, Birse, and/or Kulkarni, and/or one or more references as charted in Exhibits 844-1 – 844-24
844-10	Laros	Holzmann, Nelson, Stahl, Sapuntzakis, Birse, and/or Kulkarni, and/or one or more references as charted in Exhibits 844-1 – 844-24

Exhibit	Reference	Combination Reference(s)
844-11	Shrira	Holzmann, Nelson, Stahl, Sapuntzakis, Birse, and/or Kulkarni, and/or one or more references as charted in Exhibits 844-1 – 844-24
844-12	Bayer	Holzmann, Nelson, Stahl, Sapuntzakis, Birse, and/or Kulkarni, and/or one or more references as charted in Exhibits 844-1 – 844-24
844-13	Cherian	One or more references as charted in Exhibits 844-1 – 844-24
844-14	Bucher	One or more references as charted in Exhibits 844-1 – 844-24
844-15	Mikuma	One or more references as charted in Exhibits 844-1 – 844-24
844-16	Kobayashi	One or more references as charted in Exhibits 844-1 – 844-24
844-17	Vinson	One or more references as charted in Exhibits 844-1 – 844-24
844-18	Taylor	One or more references as charted in Exhibits 844-1 – 844-24
844-19	Malcolm	One or more references as charted in Exhibits 844-1 – 844-24
844-20	Shah	One or more references as charted in Exhibits 844-1 – 844-24
844-21	Rothman	One or more references as charted in Exhibits 844-1 – 844-24
844-22	McCall	One or more references as charted in Exhibits 844-1 – 844-24
844-23	Southwest Airlines NetApp System	Holzmann, Nelson, Stahl, Sapuntzakis, Birse, and/or Kulkarni, and/or one or more references as charted in Exhibits 844-1 – 844-24

Exhibit	Reference	Combination Reference(s)
844-24	VMware Systems	Holzmann, Nelson, Stahl, Sapuntzakis, Birse, and/or Kulkarni, and/or one or more references as charted in Exhibits 844-1 – 844-24

It will be understood that, given the similarities between the art, any of Sapuntzakis, Birse, Kulkarni, Stahl, Zhang, Kiselev, Takeda, Menon, Kodama, Holzmann, Nelson, Cherian, Bucher, Mikuma, Kobayashi, Vinson, Taylor, Malcolm, Shah, Rothman, McCall, Laros, Shrira, Bayer, Southwest Airlines NetApp System, and/or VMware Systems could be combined with one or more of each other, for example based on the disclosures shown in Exhibits 844-1 – 844-24. It would have been obvious to combine these references for reasons that are readily apparent to one of ordinary skill in the art, and for reasons explained in additional detail in the sections that follow.

2. The Claims Recite Well-Known Concepts that Would Have Been Obvious to Implement

As noted above, the asserted claims of the '844 Patent represent nothing more than an arrangement of well-known concepts and features and add nothing to the state of the art at the time of the alleged invention. For each of the concepts represented by the claims, it would have been inherently obvious to add to the teachings of any number of known references and products, including to any of the primary references charted in Exhibits 844-1 – 844-24 to the extent that such reference is alleged to be missing such concept or feature.

3. Additional Reasons to Combine

In addition to the information contained elsewhere in these invalidity contentions, including in Exhibits 844-1 – 844-24, Southwest has identified additional motivations and reasons to combine the various references. Southwest notes that in *KSR Int'l Co. v. Teleflex Inc.*, the Supreme Court held that "[i]n determining whether the subject matter of a patent claim is obvious,

neither the particular motivation nor the avowed purpose of the patentee controls. What matters is the objective reach of the claim. If the claim extends to what is obvious, it is invalid under § 103." 550 U.S. 398, 127 S.Ct. 1727, 1742 (2007).

KSR further illustrated several ways in which the subject matter of a patent claim may be shown to be obvious. For instance, "[o]ne of the ways in which a patent's subject matter can be proved obvious is by noting that there existed at the time of invention a known problem for which there was an obvious solution encompassed by the patent's claims." *KSR*, 127 S.Ct. 1727, 1742. The Supreme Court held that it was error to "look only to the problem the patentee was trying to solve." *Id*. Rather, "[t]he question is not whether the combination was obvious to the patentee but whether the combination was obvious to a person with ordinary skill in the art. Under the correct analysis, any need or problem known in the field of endeavor at the time of invention and addressed by the patent can provide a reason for combining the elements in the manner claimed." *Id*. Further, "[c]ommon sense teaches … that familiar items may have obvious uses beyond their primary purposes, and in many cases a person of ordinary skill will be able to fit the teachings of multiple patents together like pieces of a puzzle." *Id.* Further, a showing that a combination of elements was "obvious to try" may show that it was obvious under § 103. *Id.* For instance, the Supreme Court held that "predictable solutions" using a combination of "known options" may render the subject matter of a patent claim obvious.

When there is a design need or market pressure to solve a problem and there are a finite number of identified, predictable solutions, a person of ordinary skill has good reason to pursue the known options within his or her technical grasp. If this leads to the anticipated success, it is likely the product not of innovation but of ordinary skill and common sense. *Id.* The ways in which the subject matter of a patent claim may be shown to be obvious, identified by *KSR*, are merely

illustrative. The main thrust of *KSR* was that "[r]igid preventative rules that deny factfinders recourse to common sense"—such as the overturned "teaching, suggestion, or motivation" test—are neither necessary under our case law nor consistent with it." *KSR*, 127 S.Ct. 1727, 1742-43; citing with approval, e.g., *DyStar Textilfarben GmbH & Co. Deutschland KG v. C.H. Patrick Co.*, 464 F. 3d 1356, 1367 (2006) ("Our suggestion test is in actuality quite flexible and not only permits, but requires, consideration of common knowledge and common sense"); *Alza Corp. v. Mylan Labs., Inc.*, 464 F. 3d 1286, 1291 (2006) ("There is flexibility in our obviousness jurisprudence because a motivation may be found implicitly in the prior art. We do not have a rigid test that requires an actual teaching to combine...").

Although Southwest notes that there is no longer a rigid requirement regarding motivation to combine under *KSR*, Southwest provides the following statements regarding motivation to combine. Multiple teachings, suggestions, and/or reasons to modify any of the references and/or to combine any two or more of the references charted in Exhibits 844-1 – 844-24 come from many sources, including the prior art (specific and as a whole), common knowledge, common sense, predictability, expectations, industry trends, design incentives or need, market demand or pressure, market forces, obvious to try, the nature of the problem faced, and/or knowledge possessed by one of ordinary skill. In addition, it would have been obvious to try combining the prior art references identified above because there were only a finite number of predictable solutions and/or because known work in one field or endeavor prompted variations based on predictable design incentives and/or market forces either in the same field or a different one.

The combination of prior art references identified in these contentions would have been obvious because the combination represents the known potential options with a reasonable expectation of success. Additionally, one of ordinary skill in the art would have been motivated to

create combinations identified in these contentions using: known methods to yield predictable results; known techniques in the same way; a simple substitution of one known, equivalent element for another to obtain predictable results; and/or teaching, suggestion, or motivation in the prior art generally. Also, market forces in the industry, and the desire to improve features and performance, would motivate the addition of features to products as they become available, become less expensive, become more commonly used, provide better performance, reduce costs, or predictably achieve other clearly desirable results.

Moreover, in addition to the information contained elsewhere in these contentions, and, in particular, charted in Exhibits 844-1 – 844-24, Southwest has identified additional motivations and reasons to combine the various references cited herein. In particular, multiple teachings, suggestions, and/or reasons to modify any of the references and/or to combine any two or more of the references charted in Exhibits 844-1 – 844-24 come from many sources, including the prior art (specific and as a whole), common knowledge, common sense, predictability, expectations, industry trends, design incentives or need, market demand or pressure, market forces, obvious to try, the nature of the problem faced, and/or knowledge possessed by one of ordinary skill. In addition, it would have been obvious to try combining the prior art references identified above because there were only a finite number of predictable solutions and/or because known work in one field or endeavor prompted variations based on predictable design incentives and/or market forces either in the same field or a different one. The combination of prior art references identified in these contentions would have been obvious because the claimed combinations represent the known potential options with a reasonable expectation of success.

To the extent that Plaintiffs contend that any of the above-identified references does not expressly or inherently disclose a particular element or limitation, it would have been obvious to

a person of ordinary skill in the art to modify the references or to combine their teachings with other prior art references, including the prior art references in these invalidity contentions, in a manner that renders such claims obvious and invalid.

In particular, various references identified above disclose, well before the critical date of the '844 Patent, systems distributed across plurality of compute nodes that provide for creating cohesive application environments by tracking changes to a common image. For example, Sapuntzakis concerns a system architecture for quickly moving the state of a running computer (including its OS, applications and user files on disk, and all data in memory) – called a "capsule" – across a network to another machine. *See* Sapuntazakis, 2. This is achieved by reducing the amount of data sent over the network through use of, for instance, "copy-on-write" ("COW") disk images that track just the updates to the disk-storage component of capsules. *Id*.

As another example, Birse relates to the provision of a OS in a net-booted environment. *See* Birse, 1:18-21. According to one embodiment, a server in a network computer ("NC") system maintains a copy of the OS that cannot be corrupted by ordinary users of the NC system. Additionally, the NC system may preserve user customizations (e.g., preferences) by maintaining individual, user, storage areas. When an NC client boots from the network and accesses a stored copy of the OS from an NC server, the user's preferences are dynamically merged with the system environment provided to the NC client. *Id.* 2:56-65. Advantageously, because of these features, a user may login to any NC client on the network and have the same user experience. *Id.* 2:65-3:3.

As yet another example, Kulkarni discloses a system comprising a server and a personal digital assistant (PDA). The server is equipped with a processor, memory, and a network interface, enabling communication with remote devices over a network, such as the Internet. The server's memory contains an image. *See* Kulkarni, at [0027]. The image in flash memory serves as the

starting point for creating an updated image. A differences file is stored that includes new data sections, data not present in the root image, and references to unchanged sections of the root image. *See* Kulkarni at [0038].

As yet another example, Stahl discloses a read-only repository file system 226 and a shared read-only file system that provides data to multiple computers. It further describes an overlay file system 220, which stores copies of files that have been modified by respective computers. Stahl also discloses a repository FS instance 224 and MapFS instance 216, which serve as a cache configured to store transient, in-memory versions of cached data blocks previously accessed by compute nodes, enabling efficient data access. *See* Stahl at [0026]-[0027].

As yet another example, Zhang describes a data module that stores primary data objects on a computer storage medium. It further discloses replication and placement of data objects in a distributed system, where replicas are created that may include only modified or additional data blocks specific to the respective compute nodes. Zhang at [0034], [0038]. Additionally, Zhang describes an index module on compute nodes that builds and tracks indices of data objects and shares this information with other nodes, enabling efficient access and management of data across the distributed system. *See* Zhang at [0008], [0047].

As yet another example, Kiselev discloses a system for maintaining consistent and up-to-date copies of primary data across a primary node and a secondary node. The primary node stores the primary data, while the secondary node holds snapshots that capture changes made to the primary data using overlay objects. These overlay objects store only the modified data blocks, referencing unchanged blocks from the primary volume. *See* Kiselev at Abstract, 5:26-63; 6:28-63.

As yet another example, Takeda discloses a data processing system comprising a primary storage unit and multiple secondary storage units. The primary storage unit (PVOL 2212) serves as the main data volume, storing data blocks used for updates and journal acquisition. The secondary storage units (SVOL 2214) store journal data and metadata derived from updates made to the primary storage unit. The journal data includes information about updates, such as addresses, timestamps, and content changes. The secondary storage unit (SVOL 2214) does not duplicate unchanged data blocks from the primary storage unit, as journal data represents only changes and additions. Additionally, the storage controller (210) incorporates a cache memory (212) to enhance I/O performance by temporarily storing data blocks. *See* Takeda at [0035]-[0038].

As yet another example, Menon discloses a shared disk system where multiple nodes, each equipped with a computer and an adaptor, interface with shared storage devices. The shared storage devices (10a, b, c) act as the primary repository storing data blocks used by compute nodes. Each adaptor includes a write cache (20a, b, c), which temporarily holds updates or modifications made by individual compute nodes. Additionally, the adaptors feature read caches (18a, b, c) that temporarily store recently accessed data blocks, optimizing data retrieval and enhancing I/O performance for compute nodes. *See* Menon at 3:55-4:61.

As yet another example, Kodama discloses a system where a primary storage unit stores a master copy of data. Kodama explains that replicated volumes store copies of the data from the master volume. The system handles changes to the data, such as modifications and deletions, by writing them to previously unused areas of the storage, with the updated data being replicated to the replicated volumes. *See* Kodama at [0007], [0050]-[0053].

As yet another example, the NetApp system implemented at Southwest Airlines in 2002 exemplifies a robust and efficient method for managing root and leaf image data. The system

architecture at Southwest leveraged clustered NetApp filers integrated with Oracle9i RAC to achieve high availability and seamless data management. The key technologies used in this setup included WAFL (Write Anywhere File Layout), SnapMirror, and SnapRestore. These technologies facilitated the management of root and leaf image data, maintained consistent application environments, and supported rapid recovery after system disruptions.

As yet another example, the VMware Systems, introduced in the early 2000s, enabled multiple virtual machines (compute nodes) to run concurrently on a single physical server. The virtual machines share data through root image files stored on centralized storage units and manage data changes via snapshots and redo logs. The systems efficiently provide data to a plurality of compute nodes through virtualization and dynamic resource allocation. *See* VMware GSX Server 3 Virtual Machine Guide, VMware GSX Server 3 Specifications Datasheet, and VMware ESX Server 2.1 Specifications Datasheet.

Various references identified above also disclose, well before the critical date of the '844 Patent, caching of data blocks. For example, Holzmann is directed to a system and method for booting multiple servers or other external devices from a storage area network using a single OS image. *See* Holzmann, [0017]. When a boot request is received from an external device, the control module 103 allocates cache space in the volatile cache memory portion 104 of the disk. The cache is used in the typical manner to optimize future access to data once it has demonstrated some likelihood of being further referenced. As additional servers or other network resources are booted, the cache is used to speed access to the most commonly used data. *Id.* at Abstract, [0021], [0024].

As another example, Nelson discloses a method and system for a caching file server. It stores the data in the cache memory accessed by the first client. A second client does not need to

access the data directly from the storage device, the data can be directly accessed by the cache memory. *See* Nelson at [0038]-[0039].

A person of ordinary skill in the art would have been motivated to combine the above references to incorporate the different beneficial technical features provided by each of the above references. Modifying the above references would have only required simple substitution, would not have required extensive experimentation, and would have yielded predictable results.

* * *

In addition to the specific combinations of prior art and the specific combinations of groups of prior art disclosed above, Southwest reserves the right to rely on any other combination of any prior art references disclosed herein. Southwest further reserves the right to rely upon combinations of prior art references disclosed within the prosecution history of the references cited herein.

The references charted in Exhibits 844-1 – 844-24 disclose the elements of the asserted claims of the '844 Patent explicitly and/or inherently and may also be relied upon to show the state of the art at the time of the alleged invention. The suggested obviousness combinations are provided in the alternative to Southwest's anticipation contentions and are not to be construed to suggest that any reference included in the combinations is not itself anticipatory.

C. OGP: Charts Setting Forth Where in the Prior Art References Each Element of the Asserted Claims Are Found

Pursuant to the Court's OGP, charts setting forth where specifically in each alleged item of prior art each element of each Asserted Claim of the '844 Patent is found are attached as Exhibits 844-1 – 844-24.

D. Other Relevant Prior Art References

In addition to the references identified above and charted in Exhibits 844-1 – 844-24, each of the references below is relevant to the '844 Patent, as it relates to the state of the art. Southwest reserves the right to amend its contentions to rely on any of the below references alone or in combination with any other references identified in these contentions.

Inventor/Author	Country	Issue/Publication No.	Filed Date
C. K. Haun et al.	US	2004/0153526	8/5/2004
James E. King et al.	US	7,529,807	5/5/2004
Yevgeniy Klimenko et al.	US	5,974,547	3/20/1998
Beng-Hong Lim	US	6,795,966	2/4/2000
Julian S. Taylor	US	5,930,513	6/6/1996
Tung M. Nguyen	US	7,870,106	2/2/2006
Pradip Kulkarni	US	7,721,282	3/30/2006
Rauch, et al., "Partition Repositories for Partition Cloning — OS Independent Software Maintenance in Large Clusters of PCs," Proceedings of the IEEE International Conference on Cluster Computing (CLUSTER 2000), DOI: 10.1109/CLUSTR.2000.889066			Pub. November 28, 2000.
Goscinski, et al., "GENESIS: An Efficient, Transparent and Easy to Use Cluster Operating System," Parallel Computing, Vol. 28, Issue 4, Pages 557–606			Pub. at least as early as April 2002
I. Souvatzis, "A shared write protected root filesystem for a cluster of network clients," arXiv, Retrieved from: https://www.researchgate.net/publication/1957467_A_Shared_Write-protected_Root_Filesystem_for_a_Group_of_Networked_Clients			Pub. at least as early as April 2004

Inventor/Author	Country	Issue/Publication No.	Filed Date
JI YONGPING	CN	CN1549171A	5/15/2003
Ryan Patrick Fong et al.	US	2003/0069951	9/14/2001
James Bernardin	US	2003/0154284	8/14/2003

V. THE '722 PATENT IS INVALID UNDER 35 U.S.C. §§ 102 AND/OR 103

A. The '722 Patent Priority Date

Application No. 11/396,251 (the '251 Application), which matured into the '722 Patent, was filed on March 30, 2006 and was a continuation of Application No. 10/105,018 (filed March 21, 2002) (now Patent No. 7,051,070) Application No. 10/105,018 is a continuation-in-part of Application No. 10/017,182 (filed Dec. 14, 2001) (now Patent No. 7,043,525).

The '722 Patent further claims the benefit of several provisional applications: Provisional Application No. 60/256,613 (filed Dec. 18, 2000); Provisional Application No. 60/276,847 (filed March 16, 2001); Provisional Application No. 60/278,303 (filed March 21, 2001); Provisional Application No. 60/279,608 (filed March 27, 2001); and Provisional Application No. 60/280,627 (filed March 29, 2001).

Plaintiff's Infringement Contentions allege that the asserted claims of the '722 Patent are entitled to a priority date of December 18, 2000, which is the filing date of the '613 Provisional. However, only one of the provisional applications, the '303 Provisional, filed on March 21, 2001, describes message types and node categories, which are claimed elements in the '722 Patent. Therefore, the asserted claims of the '722 Patent are only entitled to a filing date of March 21, 2001.

B. Identification of Prior Art that Anticipates or Renders Obvious the Asserted Claims of the '722 Patent

Southwest contends that the prior art references listed below and charted in Exhibits 722-1 – 722-11 anticipate and/or render obvious, alone or in combination, one or more of the asserted claims of the '722 Patent.

Prior Art Reference	Publication Date
U.S. Patent No. 5,721,825 ("Lawson")	Filed October 3, 1996 Issued – February 24, 1998 This reference is prior art under at least Pre-AIA 35 U.S.C. § 102(b) and § 102(e).
U.S. Patent No. 6,480,883 ("Tsutsumitake")	Filed – June 29, 1999 Issued – November 12, 2002 This reference is prior art under at least Pre-AIA 35 U.S.C. § 102(e).
PCT Patent Application Publication No. WO 99/26127 ("Kostes")	Filed – November 13, 1998 Published – May 27, 1999 This reference is prior art under at least Pre-AIA 35 U.S.C. § 102(b) and § 102(e).
U.S. Patent No. 6,999,991 ("Ikeda")	Filed – July 24, 2000 Issued – February 14, 2006 This reference is prior art under at least Pre-AIA 35 U.S.C. § 102(e).
U.S. Patent No. 6,990,591 ("Pearson")	Filed – December 22, 1999 Issued – January 24, 2006 This reference is prior art under at least Pre-AIA 35 U.S.C. § 102(e).
European Patent Application Publication No. EP1043671 ("Bird")	Filed – March 17, 2000 Published – October 11, 2000 This reference is prior art under at least Pre-AIA 35 U.S.C. § 102(a).

Prior Art Reference	Publication Date
U.S. Patent No. 6,721,740 ("Skinner")	Filed – June 5, 1998 Issued – April 13, 2004 This reference is prior art under at least Pre-AIA 35 U.S.C. § 102(e).
United States Patent No. 6,710,702 ("Averbuch")	Filed – November 22, 1999 Issued – March 23, 2004 This reference is prior art under at least Pre-AIA 35 U.S.C. § 102(e).
United States Patent No. 6,763,384 ("Gupta")	Filed – July 10, 2000 Issued – July 13, 2004 This reference is prior art under at least Pre-AIA 35 U.S.C. § 102(e).
United States Patent No. 6,859,829 ("Parupudi")	Filed – February 23, 1999 Issued – February 22, 2005 This reference is prior art under at least Pre-AIA 35 U.S.C. § 102(e).
United States Patent No. 6,216,132 ("Chandra")	Filed – November 20, 1997 Issued – April 10, 2001 This reference is prior art under at least Pre-AIA 35 U.S.C. § 102(e).
United States Patent No. 6,910,070 ("Mishra")	Filed – January 24, 2000 Issued – June 21, 2005 This reference is prior art under at least Pre-AIA 35 U.S.C. § 102(e).
United States Patent No. 6,823,359 ("Heidingsfeld")	Filed – November 21, 2000 Issued – November 23, 2004 This reference is prior art under at least Pre-AIA 35 U.S.C. § 102(e).
United States Patent No. 6,757,283 ("Yamanaka")	Filed – January 24, 2000 Issued – June 29, 2004

Prior Art Reference	Publication Date
	This reference is prior art under at least Pre-AIA 35 U.S.C. § 102(e).
United States Patent No. 7,051,084 ("Hayton")	Filed – November 2, 2000 Issued – May 23, 2006 This reference is prior art under at least Pre-AIA 35 U.S.C. § 102(e).
United States Patent No. 6,633,910 ("Rajan")	Filed – December 14, 1999 Issued – October 14, 2003 This reference is prior art under at least Pre-AIA 35 U.S.C. § 102(e).
United States Patent No. 9,300,560 ("Leighton")	Filed – March 4, 2013 Priority - July 20, 2000 Issued – March 29, 2016 This reference is prior art under at least Pre-AIA 35 U.S.C. § 102(e).
PointCast System – PointCast Incorporated	At least as early as 1997 This reference is prior art under at least Pre-AIA 35 U.S.C. §§ 102(a) or (g).
Castanet System – Marimba, Inc.	At least as early as 1996 This reference is prior art under at least Pre-AIA 35 U.S.C. §§ 102(a) or (g).
Active Desktop System – Microsoft Corporation	At least as early as 1998 This reference is prior art under at least Pre-AIA 35 U.S.C. §§ 102(a) or (g).

Plaintiffs assert claims 14, 16, 17, and 18 of the '722 Patent against Southwest in this lawsuit. These claims are invalid because the '722 Patent fails to meet one or more of the requirements for patentability. The individual bases for invalidity are provided below and in Exhibits 722-1 - 722-11. Each of the prior art references, the underlying work, and/or the

underlying apparatus or method qualifies as prior art under one or more sections of Pre-AIA 35 U.S.C. §§ 102 and/or 103.

In an effort to focus the issues, Southwest has cited representative portions of identified references, even where a reference may contain additional disclosures or support for a particular claim element. Each and every disclosure of the same limitation in the same reference is not necessarily identified. In addition, persons of ordinary skill in the art generally read a prior art reference as a whole and in the context of other publications and literature and in the context of their knowledge as persons of ordinary skill in the art. Thus, to understand and interpret any specific statement or disclosure within a prior art reference, such persons would rely on other information within the reference, along with other publications and their general scientific knowledge and experience in the field. Thus, each prior art reference identified herein should be understood in the context of the reference itself in conjunction with anything incorporated by reference or described as relevant technology by the reference, any documents that are referred to for further understanding by the reference, any product embodying the reference, and any testimony by those with knowledge of the reference, such as the named authors and inventors. Southwest may rely upon uncited portions of the prior art references and on other publications and expert testimony to provide context, and as aids to understanding and interpreting the portions that are cited. Southwest may also rely on uncited portions of the prior art references, other disclosed publications, and the testimony of experts to establish that a person of ordinary skill in the art would have been motivated to modify or combine certain of the cited references so as to render the claims obvious.

Some or all of the asserted claims of the '722 Patent are invalid as anticipated under Pre-AIA 35 U.S.C. § 102 in view of certain ones of the prior art references identified above as detailed

in the claim charts included in Exhibits 722-1 - 722-11, which identify specific examples of where each limitation of the asserted claims of the '722 Patent is found in the prior art references. As explained above, the cited portions of prior art references identified in the attached claim charts are exemplary in nature and representative of the content and teaching of the prior art references, and should be understood in the context of the reference as a whole and as they would be understood by a person of ordinary skill in the art.

To the extent any item of prior art cited above is deemed not to disclose, explicitly or inherently, any limitation of an asserted claim of the '722 Patent, Southwest reserves the right to argue that any difference between that prior art and the corresponding patent claim would have been either inherent in the art or obvious to a person of ordinary skill in the art, even if Southwest has not specifically denoted that the art is to be combined with the knowledge of a person of ordinary skill in the art.

To the extent Plaintiffs argue that any limitation of the asserted claims of the '722 Patent is not explicitly disclosed by an item of prior art identified above and in Exhibits 722-1 - 722-11, any purported differences are such that the claimed subject matter as a whole would have been obvious to one skilled in the art at the time of the alleged invention, in view of the state of the art and knowledge of those skilled in the art. The item of prior art would, therefore, render the relevant claims invalid as obvious under Pre-AIA 35 U.S.C. § 103.

To the extent any of the foregoing references are found not to anticipate the asserted claims of the '722 Patent, the foregoing references render the asserted claims obvious, either alone or in combination with one or more of the other references identified above. One of ordinary skill in the art would have been motivated to combine the various references cited herein so as to disclose each and every limitation of the asserted claims of the '722 Patent.

The prior art identified in Exhibits 722-1 - 722-11 renders one or more asserted claims of the '722 Patent obvious when the references are read alone or in combination with one or more of each other and/or when read in view of the state of the art and knowledge of those skilled in the art.

To the extent that Plaintiff argues that any asserted claim of the '722 Patent is not disclosed or rendered obvious by any reference charted in Exhibits 722-1 - 722-11, the asserted claims nevertheless would have been obvious in light of one or more other references charted in Exhibits 722-1 - 722-11 and in view of the knowledge, experience, and understanding of persons of ordinary skill in the art.

Each and every reference identified is also relevant to the state of the art at the time of the alleged invention. Any of the references disclosed above may be combined with one another to render obvious (and therefore invalid) each of the asserted claims of the '722 Patent. Southwest may rely upon a subset of the above identified references, or all of the references identified above, including all references in charted in Exhibits 722-1 - 722-11, for purposes of obviousness depending on the Court's claim construction, positions taken by Plaintiffs during this litigation, and further investigation and discovery.

1. Example Combinations of the Prior Art

The table below provides an identification of exemplary combinations of prior art references that, based on Southwest's present understanding of Plaintiff's Infringement Contentions and apparent reading of the claims, render obvious one or more of the asserted claims of the '722 Patent. The combinations of references identified below are non-exhaustive, and additional examples are apparent from other combinations of references charted in Exhibits 722-1 - 722-11. Although certain references charted in Exhibits 722-1 - 722-11 are listed variously in the left or right column below, Southwest does not thereby imply any restriction as to which reference

is primary and which reference is secondary in such a combination. Southwest reserves the right to rely on either identified reference in the identified combinations as a primary and/or secondary reference.

Exhibit	Reference	Combination Reference(s)
722-1	Lawson	Averbuch, Chandra, Mishra, Yamanaka, Hayton, Rajan, Tsutsumitake, Bird, Pearson, PointCast System, Castanet System, and/or Active Desktop System, and/or one or more references as charted in Exhibits 722-1 - 722-11
722-2	Kostes	Averbuch, Chandra, Mishra, Yamanaka, Hayton, Rajan, Tsutsumitake, Bird, Pearson, PointCast System, Castanet System, and/or Active Desktop System, and/or one or more references as charted in Exhibits 722-1 - 722-11
722-3	Ikeda	Averbuch, Chandra, Mishra, Yamanaka, Hayton, Rajan, Tsutsumitake, Bird, Pearson, PointCast System, Castanet System, and/or Active Desktop System, and/or one or more references as charted in Exhibits 722-1 - 722-11
722-4	Skinner	Averbuch, Chandra, Mishra, Yamanaka, Hayton, Rajan, Tsutsumitake, Bird, and/or Pearson, and/or one or more references as charted in Exhibits 722-1 - 722-11
722-5	Gupta	Averbuch, Chandra, Mishra, Yamanaka, Hayton, Rajan, Tsutsumitake, Bird, and/or Pearson, and/or one or more references as charted in Exhibits 722-1 - 722-11
722-6	Parapudi	Averbuch, Chandra, Mishra, Yamanaka, Hayton, Rajan, Tsutsumitake, Bird, and/or Pearson, and/or one or more references as charted in Exhibits 722-1 - 722-11
722-7	Heidingsfeld	Averbuch, Chandra, Mishra, Yamanaka, Hayton, Rajan, Tsutsumitake, Bird, and/or

Exhibit	Reference	Combination Reference(s)
		Pearson, and/or one or more references as charted in Exhibits 722-1 - 722-11
722-8	Leighton	Averbuch, Chandra, Mishra, Yamanaka, Hayton, Rajan, Tsutsumitake, Bird, and/or Pearson, and/or one or more references as charted in Exhibits 722-1 - 722-11
722-9	PointCast System	Lawson, Kostes, Ikeda, Averbuch, Chandra, Mishra, Yamanaka, Hayton, Rajan, Tsutsumitake, Bird, and/or Pearson, and/or one or more references as charted in Exhibits 722-1 - 722-11
722-10	Castanet System	Lawson, Kostes, Ikeda, Averbuch, Chandra, Mishra, Yamanaka, Hayton, Rajan, Tsutsumitake, Bird, and/or Pearson, and/or one or more references as charted in Exhibits 722-1 - 722-11
722-11	Active Desktop System	Lawson, Kostes, Ikeda, Averbuch, Chandra, Mishra, Yamanaka, Hayton, Rajan, Tsutsumitake, Bird, and/or Pearson, and/or one or more references as charted in Exhibits 722-1 - 722-11

It will be understood that, given the similarities between the art, any of Lawson, Kostes, Ikeda, Skinner, Gupta, Parapudi, Heidingsfeld, Averbuch, Chandra, Mishra, Yamanaka, Hayton, Rajan, Tsutsumitake, Bird, Pearson, Leighton, Castanet System, PointCast System, and/or Active Desktop System could be combined with one or more of each other, for example based on the disclosures shown in Exhibits 722-1 - 722-11. It would have been obvious to combine these references for reasons that are readily apparent to one of ordinary skill in the art, and for reasons explained in additional detail in the sections that follow.

2. The Claims Recite Well-Known Concepts that Would Have Been Obvious to Implement

As noted above, the asserted claims of the '722 Patent represent nothing more than an arrangement of well-known concepts and features and add nothing to the state of the art at the time of the alleged invention. For each of the concepts represented by the claims, it would have been inherently obvious to add to the teachings of any number of known references and products, including to any of the primary references charted in Exhibits 722-1 - 722-11 to the extent that such reference is alleged to be missing such concept or feature.

3. Additional Reasons to Combine

In addition to the information contained elsewhere in these invalidity contentions, including in Exhibits 722-1 - 722-11, Southwest has identified additional motivations and reasons to combine the various references. Southwest notes that in *KSR Int'l Co. v. Teleflex Inc.*, the Supreme Court held that "[i]n determining whether the subject matter of a patent claim is obvious, neither the particular motivation nor the avowed purpose of the patentee controls. What matters is the objective reach of the claim. If the claim extends to what is obvious, it is invalid under § 103." 550 U.S. 398, 127 S.Ct. 1727, 1742 (2007).

KSR further illustrated several ways in which the subject matter of a patent claim may be shown to be obvious. For instance, "[o]ne of the ways in which a patent's subject matter can be proved obvious is by noting that there existed at the time of invention a known problem for which there was an obvious solution encompassed by the patent's claims." *KSR*, 127 S.Ct. 1727, 1742. The Supreme Court held that it was error to "look only to the problem the patentee was trying to solve." *Id*. Rather, "[t]he question is not whether the combination was obvious to the patentee but whether the combination was obvious to a person with ordinary skill in the art. Under the correct analysis, any need or problem known in the field of endeavor at the time of invention and addressed

by the patent can provide a reason for combining the elements in the manner claimed." *Id*. Further, "[c]ommon sense teaches … that familiar items may have obvious uses beyond their primary purposes, and in many cases a person of ordinary skill will be able to fit the teachings of multiple patents together like pieces of a puzzle." *Id.* Further, a showing that a combination of elements was "obvious to try" may show that it was obvious under § 103. *Id.* For instance, the Supreme Court held that "predictable solutions" using a combination of "known options" may render the subject matter of a patent claim obvious.

When there is a design need or market pressure to solve a problem and there are a finite number of identified, predictable solutions, a person of ordinary skill has good reason to pursue the known options within his or her technical grasp. If this leads to the anticipated success, it is likely the product not of innovation but of ordinary skill and common sense. *Id.* The ways in which the subject matter of a patent claim may be shown to be obvious, identified by *KSR*, are merely illustrative. The main thrust of *KSR* was that "[r]igid preventative rules that deny factfinders recourse to common sense"—such as the overturned "teaching, suggestion, or motivation" test—are neither necessary under our case law nor consistent with it." *KSR*, 127 S.Ct. 1727, 1742-43; citing with approval, e.g., *DyStar Textilfarben GmbH & Co. Deutschland KG v. C.H. Patrick Co.*, 464 F. 3d 1356, 1367 (2006) ("Our suggestion test is in actuality quite flexible and not only permits, but requires, consideration of common knowledge and common sense"); *Alza Corp. v. Mylan Labs., Inc.*, 464 F. 3d 1286, 1291 (2006) ("There is flexibility in our obviousness jurisprudence because a motivation may be found implicitly in the prior art. We do not have a rigid test that requires an actual teaching to combine...").

Although Southwest notes that there is no longer a rigid requirement regarding motivation to combine under *KSR*, Southwest provides the following statements regarding motivation to

combine. Multiple teachings, suggestions, and/or reasons to modify any of the references and/or to combine any two or more of the references charted in Exhibits 722-1 - 722-11 come from many sources, including the prior art (specific and as a whole), common knowledge, common sense, predictability, expectations, industry trends, design incentives or need, market demand or pressure, market forces, obvious to try, the nature of the problem faced, and/or knowledge possessed by one of ordinary skill. In addition, it would have been obvious to try combining the prior art references identified above because there were only a finite number of predictable solutions and/or because known work in one field or endeavor prompted variations based on predictable design incentives and/or market forces either in the same field or a different one.

The combination of prior art references identified in these contentions would have been obvious because the combination represents the known potential options with a reasonable expectation of success. Additionally, one of ordinary skill in the art would have been motivated to create combinations identified in these contentions using: known methods to yield predictable results; known techniques in the same way; a simple substitution of one known, equivalent element for another to obtain predictable results; and/or teaching, suggestion, or motivation in the prior art generally. Also, market forces in the industry, and the desire to improve features and performance, would motivate the addition of features to products as they become available, become less expensive, become more commonly used, provide better performance, reduce costs, or predictably achieve other clearly desirable results.

Moreover, in addition to the information contained elsewhere in these contentions, and, in particular, charted in Exhibits 722-1 - 722-11, Southwest has identified additional motivations and reasons to combine the various references cited herein. In particular, multiple teachings, suggestions, and/or reasons to modify any of the references and/or to combine any two or more of

the references charted in Exhibits 722-1 - 722-11 come from many sources, including the prior art (specific and as a whole), common knowledge, common sense, predictability, expectations, industry trends, design incentives or need, market demand or pressure, market forces, obvious to try, the nature of the problem faced, and/or knowledge possessed by one of ordinary skill. In addition, it would have been obvious to try combining the prior art references identified above because there were only a finite number of predictable solutions and/or because known work in one field or endeavor prompted variations based on predictable design incentives and/or market forces either in the same field or a different one. The combination of prior art references identified in these contentions would have been obvious because the claimed combinations represent the known potential options with a reasonable expectation of success.

To the extent that Plaintiffs contend that any of the above-identified references does not expressly or inherently disclose a particular element or limitation, it would have been obvious to a person of ordinary skill in the art to modify the references or to combine their teachings with other prior art references, including the prior art references in these invalidity contentions, in a manner that renders such claims obvious and invalid.

In particular, various references identified above disclose, well before the critical date of the '722 Patent, systems for providing live objects and routing updates to live objects via various nodes based on message and node types to clients registered to receive updates to the live objects.

For example, Ikeda discloses a push service system that routes data to registered client devices through various agents (nodes) depending on the type of node. See Ikeda at Abstract, 19:48-20:20, 20:28-47.

As another example, Lawson discloses "[a] system [and] method for global event notification in a distributed computer environment" in which "a local event registry [is used] to

identify local event consumers that should be notified when an event occurs" and "[A] global event registry [] identifies other servers which need notification when an event occurs." These other servers "will then, in turn, notify their local event consumers of the event." *See* Lawson at Abstract.

As yet another example, Kostes, discloses "a system and method for displaying, in near real-time, data published from various computer systems and networks, such as the Internet." 1:22-24. The system is "web-enabled, providing tight integration with all popular [web] browsers." 30:17-20. In Kostes's "publish/subscribe architecture [(aka ''model-view' architecture')] ... various information sources [(e.g., different sources such as Sportsticker, CNN, Reuters, etc.)], most likely under a contractual agreement with [Kostes's] push server, constantly publish and broadcast data to the push server, using any desired communication method," and a "client computer subscribes to desired types of information available from the push server." 7:12-18, 16:10-13, 2:11-20, 3:9-14.

As yet another example, Tsutsumitake discloses "[a] real-time information transmission system [and method that] can immediately transmit information updated on a server to a client" in a web-enabled environment. *See* Tsutsumitake at Abstract; 1:6-32. A web "client analyzes [a web]page. If an event request is included in the analyzed page ... [a] connection ID [is used by] the server [to] send[] an event to the client each time the event has occurred. The client processes the event and reflects the processed result on a screen of a display" to, e.g., update in real time powerplant data 71 and 72 being monitored via the web. *See* Tsutsumitake at Abstract, 13:31-65.

As yet another example, the PointCast System provided a push/subscribe service in which live webpage objects such as news, financial data, and other content was dynamically updated within a graphical UI. *See* https://web.archive.org/web/19990826121133/http://www.pointcast.com/tour/index.html?homet

xt. The PointCast server acted as a gateway, receiving news or stock updates from external sources and associating them with specific content channels. The PointCast server/gateway identified the category of update message and then sent the update message to the appropriate node type. *See* https://www.pcmag.com/encyclopedia/term/pointcast; https://web.archive.org/web/19990921040538/http://www.pointcast.com/content/index.html?hometxt.

As yet another example, the Castanet System, introduced in 1996, was a family of Java-based delivery systems for publishing and automatically distributing application updates and other published materials via the Internet and intranets." *See* https://www.pcmag.com/encyclopedia/term/marimba.

As yet another example, the Active Desktop System is a Microsoft Windows feature since Windows 95 that allows users to display interactive content, such as web pages, as their desktop wallpaper. *See* https://gustavus.edu/gts/Active_Desktop. Active desktop "provid[ed] a dynamic and personalized computing experience, transforming your static desktop into an interactive hub. By embedding live web content like news feeds or weather updates directly onto your background, it keeps you informed without the need to open multiple applications. This feature enhances convenience and productivity, offering real-time information briefly. Tailoring your desktop with active desktop ensures a workspace that aligns with your preferences, making it a valuable tool for those seeking a more engaging and customized digital environment." *See* https://www.lenovo.com/us/en/glossary/active-desktops/.

Various references identified above also disclose, well before the critical date of the '722 Patent, identifying a message category based on an input source. For example, Bird discloses a publish/subscribe system in which messages are identified according to the sender. *See* Bird at

Abstract, [0044]. As another example, Pearson discloses including source identifying information in message headers such as port numbers. *See* Pearson at 18:41-19:18.

A person of ordinary skill in the art would have been motivated to combine the above references to incorporate the different beneficial technical features provided by each of the above references. Modifying the above references would have only required simple substitution, would not have required extensive experimentation, and would have yielded predictable results.

* * *

In addition to the specific combinations of prior art and the specific combinations of groups of prior art disclosed above, Southwest reserves the right to rely on any other combination of any prior art references disclosed herein. Southwest further reserves the right to rely upon combinations of prior art references disclosed within the prosecution history of the references cited herein.

The references charted in Exhibits 722-1 - 722-11 disclose the elements of the asserted claims of the '722 Patent explicitly and/or inherently and may also be relied upon to show the state of the art at the time of the alleged invention. The suggested obviousness combinations are provided in the alternative to Southwest's anticipation contentions and are not to be construed to suggest that any reference included in the combinations is not itself anticipatory.

C. OGP: Charts Setting Forth Where in the Prior Art References Each Element of the Asserted Claims Are Found

Pursuant to the Court's OGP, charts setting forth where specifically in each alleged item of prior art each element of each Asserted Claim of the '722 Patent is found are attached as Exhibits 722-1 - 722-11.

D. Additional Prior Art

In addition to the references identified above and charted in Exhibits 722-1 - 722-11, each of the references below is relevant to the '722 Patent, as it relates to the state of the art. Southwest reserves the right to amend its contentions to rely on any of the below references alone or in combination with any other references identified in these contentions.

Inventor/Author	Country	Issue/Publication No.	Filed Date
Robert W. Baynes Jr. et al.	US	2002/0032722	9/12/2001
Simon Antony James Holdsworth et al.	US	7,103,680	4/25/2000
Andrew John Mark Miles et al.	US	6,886,044	4/26/2005
Mark A. Fox et al.	US	6,654,786	8/30/2000
Richard Lee Schwartz et al.	US	5,913,032	9/30/1996
Hemant Madan	US	7,516,196	3/21/2000
Christopher C. Andrews	US	2010/0325562	3/1/2000
Stephen James Paul Todd	US	6,643,682	2/22/2000
Hirokawa Masaru et al.	JP	JPH11353216A	06/08/1998; Pub. 12/24/1999
James P. Richardson et al.	US	6,292,803	11/18/1997
Colin Leonard Bird et al.	UK	GB 2 348 025	3/19/1999; Pub 9/20/2000
M. Hauswirth and M. Jazayeri, "A Component and Communication Model for Push Systems," Proceedings of the ESEC/FSE 99 - Joint 7th European Software Engineering Conference ("Hauswirth")			Pub. at least as early as September 6, 1999.
G. S. Barnes Nelson, "Messaging Systems: SAS® Tools for Internet-Based Communications," Proceedings of the 25th Annual SAS Users Group International Conference (SUGI 25), Paper 288-25 ("Barnes Nelson")			Pub. at least as early as March 19, 1999.
Segall, et al., "Content Based Routing with Elvin4," Proceedings of AUUG2K (No. 39) ("Segall")			Pub. at least as early as June 2000.

VI. THE '785 PATENT IS INVALID UNDER 35 U.S.C. §§ 102 AND/OR 103

A. The '785 Patent Priority Date

Plaintiff's Infringement Contentions allege the asserted claims of the '785 Patent have a filing date of March 21, 2003. However, this appears to be a typographical error. The '785 Patent has a filing date of March 31, 2003. The '785 Patent includes no priority claim.

B. Identification of Prior Art that Anticipates or Renders Obvious the Asserted Claims of the '785 Patent

Southwest contends that the prior art references listed below and charted in Exhibits 785-1 – 785-29 anticipate and/or render obvious, alone or in combination, one or more of the asserted claims of the '785 Patent.

Prior Art Reference	Publication Date
U.S. Patent No. 6,970,941 ("Caronni I")	Filed – December 10, 1999 Issued – November 29, 2005 This reference is prior art under at least Pre-AIA 35 U.S.C. § 102(e).
U.S. Patent No. 7,814,228 ("Caronni II")	Filed – February 13, 2003 Issued – October 12, 2010 This reference is prior art under at least Pre-AIA 35 U.S.C. § 102(e).
U.S. Patent No. 6,766,371 ("Hipp")	Filed – October 5, 2000 Issued – July 20, 2004 This reference is prior art under at least Pre-AIA 35 U.S.C. § 102(e).
U.S. Patent Application Publication No. 2003/0028671 ("Mehta")	Filed – June 10, 2002 Published – February 6, 2003 This reference is prior art under at least Pre-AIA 35 U.S.C. § 102(e).
Huitema, C., Network Working Group Request for Comment (RFC): 1383, entitled An Experiment in DNS	Published December 1992 This reference is prior art under at least Pre-AIA 35 U.S.C. § 102(b).

Prior Art Reference	Publication Date
Based IP Routing ("RFC 1383")	
U.S. Patent No. 7,133,404 ("Alkhatib")	Filed – August 10, 2001 Issued – November 7, 2006 This reference is prior art under at least Pre-AIA 35 U.S.C. § 102(e).
U.S. Patent Application Publication No. 2002/0184529 ("Foster I")	Filed – April 19, 2002 Published – December 5, 2002 This reference is prior art under at least Pre-AIA 35 U.S.C. § 102(e).
U.S. Patent Application Publication No. 2003/0208602 ("Bhalla")	Filed – April 8, 2002 Published – November 6, 2003 This reference is prior art under at least Pre-AIA 35 U.S.C. § 102(e).
U.S. Patent Application Publication No. 2002/0181395 ("Foster II")	Filed – April 19, 2002 Published – December 5, 2002 This reference is prior art under at least Pre-AIA 35 U.S.C. § 102(e).
U.S. Patent Application Publication No. 2002/0091859 ("Tuomenoksa")	Filed – April 11, 2001 Published – July 11, 2002 This reference is prior art under at least Pre-AIA 35 U.S.C. § 102(e).
U.S. Patent Application Publication No. 2004/0177136 ("Chen")	Filed – March 3, 2003 Published – September 9, 2004 This reference is prior art under at least Pre-AIA 35 U.S.C. § 102(e).
European Patent Publication No. EP1098496 ("Engmann")	Published – October 19, 2000 This reference is prior art under at least Pre-AIA 35 U.S.C. § 102(b).
U.S. Patent Application Publication No. 2002/0069278 ("Forslow")	Filed – December 5, 2000 Published – June 6, 2002 This reference is prior art under at least Pre-AIA 35 U.S.C. § 102(e).
U.S. Patent No. 6,701,437 ("Hoke")	Filed – November 9, 1998

Prior Art Reference	Publication Date
	Issued – March 2, 2004 This reference is prior art under at least Pre-AIA 35 U.S.C. § 102(e).
U.S. Patent Application Publication No. 2002/0116502 ("Iyer")	Filed – February 22, 2001 Published – August 22, 2002 This reference is prior art under at least Pre-AIA 35 U.S.C. § 102(e).
U.S. Patent Application Publication No. 2003/0065785 ("Jain")	Filed – September 28, 2001 Published – April 3, 2003 This reference is prior art under at least Pre-AIA 35 U.S.C. § 102(e).
U.S. Patent Application Publication No. 2002/0035624 ("Kim")	Filed – July 9, 2001 Published – March 21, 2002 This reference is prior art under at least Pre-AIA 35 U.S.C. §§ 102(b) and (e).
U.S. Patent Application Publication No. 20020154635 ("Liu")	Filed – April 23, 2001 Published – October 24, 2002 This reference is prior art under at least Pre-AIA 35 U.S.C. § 102(e).
U.S. Patent No. 8,068,817 ("Viswanath")	Filed – August 27, 2002 Issued – November 29, 2011 This reference is prior art under at least Pre-AIA 35 U.S.C. § 102(e).
U.S. Patent Application Publication No. 2002/0116523 ("Warrier")	Filed – February 22, 2001 Published – August 22, 2002 This reference is prior art under at least Pre-AIA 35 U.S.C. § 102(e).
U.S. Patent Application Publication No. 2003/0229697 ("Borella")	Filed – June 10, 2002 Published – December 11, 2003 This reference is prior art under at least Pre-AIA 35 U.S.C. § 102(e).
U.S. Patent Application Publication No. 2003/0084162 ("Johnson")	Filed – October 31, 2001 Published – May 1, 2003 This reference is prior art under at least Pre-AIA 35 U.S.C. § 102(e).
PCT Patent Application Publication No.	Filed – March 28, 2003

Prior Art Reference	Publication Date
WO2003088625 (“Volz”)	Priority – April 8, 2002 Published – October 23, 2003 This reference is prior art under at least Pre-AIA 35 U.S.C. § 102(e).
U.S. Patent Application Publication No. 2004/0098507 (“Thubert”)	Filed – November 20, 2002 Published – May 20, 2004 This reference is prior art under at least Pre-AIA 35 U.S.C. § 102(e).
U.S. Patent Application Publication No. 2003/0016636 (“Tari”)	Filed – July 15, 2002 Published – January 23, 2003 This reference is prior art under at least Pre-AIA 35 U.S.C. § 102(e).
U.S. Patent No. 8,107,483 (“Dunk”)	Filed – March 12, 2010 Priority – November 27, 2002 Issued – January 31, 2012 This reference is prior art under at least Pre-AIA 35 U.S.C. § 102(e).
PCT Patent Application Publication No. WO2002015014 (“Wootton”)	Filed – July 31, 2001 Published – February 21, 2002 This reference is prior art under at least Pre-AIA 35 U.S.C. §§ 102(b) and (e).
U.S. Patent Application Publication No. 2002/0038382 (“Ryu”)	Filed – August 30, 2001 Published – March 28, 2002 This reference is prior art under at least Pre-AIA 35 U.S.C. §§ 102(b) and (e).
U.S. Patent Application Publication No. 2003/0172184 (“Kong”)	Filed – March 6, 2003 Published – September 11, 2003 This reference is prior art under at least Pre-AIA 35 U.S.C. § 102(e).
U.S. Patent Application Publication No. 2004/0037260 (“Kakemizu”)	Filed – August 7, 2003 Published – February 26, 2004 This reference is prior art under at least Pre-AIA 35 U.S.C. § 102(e).

Prior Art Reference	Publication Date
Cisco VPN Routers and Software Systems – Cisco Systems	At least as early as 2002 This reference is prior art under at least Pre-AIA 35 U.S.C. §§ 102(a) and (g).
VMware Systems - VMware	At least as early as 2001 This reference is prior art under at least Pre-AIA 35 U.S.C. §§ 102(a) and (g).

Plaintiffs assert claims 30, 35, and 37 of the '785 Patent against Southwest in this lawsuit. These claims are invalid because the '785 Patent fails to meet one or more of the requirements for patentability. The individual bases for invalidity are provided below and in Exhibits 785-1 – 785-29. Each of the prior art references, the underlying work, and/or the underlying apparatus or method qualifies as prior art under one or more sections of Pre-AIA 35 U.S.C. §§ 102 and/or 103.

In an effort to focus the issues, Southwest has cited representative portions of identified references, even where a reference may contain additional disclosures or support for a particular claim element. Each and every disclosure of the same limitation in the same reference is not necessarily identified. In addition, persons of ordinary skill in the art generally read a prior art reference as a whole and in the context of other publications and literature and in the context of their knowledge as persons of ordinary skill in the art. Thus, to understand and interpret any specific statement or disclosure within a prior art reference, such persons would rely on other information within the reference, along with other publications and their general scientific knowledge and experience in the field. Thus, each prior art reference identified herein should be understood in the context of the reference itself in conjunction with anything incorporated by reference or described as relevant technology by the reference, any documents that are referred to for further understanding by the reference, any product embodying the reference, and any testimony by those with knowledge of the reference, such as the named authors and inventors.

Southwest may rely upon uncited portions of the prior art references and on other publications and expert testimony to provide context, and as aids to understanding and interpreting the portions that are cited. Southwest may also rely on uncited portions of the prior art references, other disclosed publications, and the testimony of experts to establish that a person of ordinary skill in the art would have been motivated to modify or combine certain of the cited references so as to render the claims obvious.

Some or all of the asserted claims of the '785 Patent are invalid as anticipated under Pre-AIA 35 U.S.C. § 102 in view of certain ones of the prior art references identified above as detailed in the claim charts included in Exhibits 785-1 – 785-29, which identify specific examples of where each limitation of the asserted claims of the '785 Patent is found in the prior art references. As explained above, the cited portions of prior art references identified in the attached claim charts are exemplary in nature and representative of the content and teaching of the prior art references, and should be understood in the context of the reference as a whole and as they would be understood by a person of ordinary skill in the art.

To the extent any item of prior art cited above is deemed not to disclose, explicitly or inherently, any limitation of an asserted claim of the '785 Patent, Southwest reserves the right to argue that any difference between that prior art and the corresponding patent claim would have been either inherent in the art or obvious to a person of ordinary skill in the art, even if Southwest has not specifically denoted that the art is to be combined with the knowledge of a person of ordinary skill in the art.

To the extent Plaintiffs argue that any limitation of the asserted claims of the '785 Patent is not explicitly disclosed by an item of prior art identified above and in Exhibits 785-1 – 785-29, any purported differences are such that the claimed subject matter as a whole would have been

obvious to one skilled in the art at the time of the alleged invention, in view of the state of the art and knowledge of those skilled in the art. The item of prior art would, therefore, render the relevant claims invalid as obvious under Pre-AIA 35 U.S.C. § 103.

To the extent any of the foregoing references are found not to anticipate the asserted claims of the '785 Patent, the foregoing references render the asserted claims obvious, either alone or in combination with one or more of the other references identified above. One of ordinary skill in the art would have been motivated to combine the various references cited herein so as to disclose each and every limitation of the asserted claims of the '785 Patent.

The prior art identified in Exhibits 785-1 – 785-29 renders one or more asserted claims of the '785 Patent obvious when the references are read alone or in combination with one or more of each other and/or when read in view of the state of the art and knowledge of those skilled in the art.

To the extent that Plaintiff argues that any asserted claim of the '785 Patent is not disclosed or rendered obvious by any reference charted in Exhibits 785-1 – 785-29, the asserted claims nevertheless would have been obvious in light of one or more other references charted in Exhibits 785-1 – 785-29 and in view of the knowledge, experience, and understanding of persons of ordinary skill in the art.

Each and every reference identified is also relevant to the state of the art at the time of the alleged invention. Any of the references disclosed above may be combined with one another to render obvious (and therefore invalid) each of the asserted claims of the '785 Patent. Southwest may rely upon a subset of the above identified references, or all of the references identified above, including all references in charted in Exhibits 785-1 – 785-29, for purposes of obviousness

depending on the Court's claim construction, positions taken by Plaintiffs during this litigation, and further investigation and discovery.

1. Example Combinations of the Prior Art

The table below provides an identification of exemplary combinations of prior art references that, based on Southwest's present understanding of Plaintiff's Infringement Contentions and apparent reading of the claims, render obvious one or more of the asserted claims of the '785 Patent. The combinations of references identified below are non-exhaustive, and additional examples are apparent from other combinations of references charted in Exhibits 785-1 – 785-29. Although certain references charted in Exhibits 785-1 – 785-29 are listed variously in the left or right column below, Southwest does not thereby imply any restriction as to which reference is primary and which reference is secondary in such a combination. Southwest reserves the right to rely on either identified reference in the identified combinations as a primary and/or secondary reference.

Exhibit	Reference	Combination Reference(s)
785-1	Mehta	RFC 1383, Caronni I, Caronni II, and/or Hipp, and/or one or more references as charted in Exhibits 785-1 – 785-29
785-2	Caronni I	Caronni II, Hipp, Mehta, and/or RFC 1383, and/or one or more references as charted in Exhibits 785-1 – 785-29
785-3	Alkhatib	One or more references as charted in Exhibits 785-1 – 785-29
785-4	Foster I	One or more references as charted in Exhibits 785-1 – 785-29
785-5	Bhalla	One or more references as charted in Exhibits 785-1 – 785-29

Exhibit	Reference	Combination Reference(s)
785-6	Foster II	One or more references as charted in Exhibits 785-1 – 785-29
785-7	Tuomenoksa	One or more references as charted in Exhibits 785-1 – 785-29
785-8	Chen	One or more references as charted in Exhibits 785-1 – 785-29
785-9	Engmann	One or more references as charted in Exhibits 785-1 – 785-29
785-10	Forslow	One or more references as charted in Exhibits 785-1 – 785-29
785-11	Hoke	One or more references as charted in Exhibits 785-1 – 785-29
785-12	Iyer	One or more references as charted in Exhibits 785-1 – 785-29
785-13	Jain	One or more references as charted in Exhibits 785-1 – 785-29
785-14	Kim	One or more references as charted in Exhibits 785-1 – 785-29
785-15	Liu	One or more references as charted in Exhibits 785-1 – 785-29
785-16	Viswanath	One or more references as charted in Exhibits 785-1 – 785-29
785-17	Warrier	One or more references as charted in Exhibits 785-1 – 785-29
785-18	Borella	One or more references as charted in Exhibits 785-1 – 785-29
785-19	Johnson	One or more references as charted in Exhibits 785-1 – 785-29
785-20	Volz	One or more references as charted in Exhibits 785-1 – 785-29

Exhibit	Reference	Combination Reference(s)
785-21	Thubert	One or more references as charted in Exhibits 785-1 – 785-29
785-22	Tari	One or more references as charted in Exhibits 785-1 – 785-29
785-23	Dunk	One or more references as charted in Exhibits 785-1 – 785-29
785-24	Wootton	One or more references as charted in Exhibits 785-1 – 785-29
785-25	Ryu	One or more references as charted in Exhibits 785-1 – 785-29
785-26	Kong	One or more references as charted in Exhibits 785-1 – 785-29
785-27	Kakemizu	One or more references as charted in Exhibits 785-1 – 785-29
785-28	Cisco VPN Routers and Software Systems	Mehta, RFC 1383, Caronni I, Caronni II, and/or Hipp, and/or one or more references as charted in Exhibits 785-1 – 785-29
785-29	VMware Systems	Mehta, RFC 1383, Caronni I, Caronni II, and/or Hipp, and/or one or more references as charted in Exhibits 785-1 – 785-29

It will be understood that, given the similarities between the art, any of Mehta, Caronni I, Caronni II, Hipp, RFC 1383, Alkhatib, Foster I , Bhalla, Foster II, Tuomenoksa, Chen, Engmann, Forslow, Hoke, Iyer, Jain, Kim, Liu, Viswanath, Warrier, Borella, Johnson, Volz, Thubert, Tari, Dunk, Wootton, Ryu, Kong, Kakemizu, Cisco VPN Routers and Software Systems, and/or VMware Systems could be combined with one or more of each other, for example based on the disclosures shown in Exhibits 785-1 – 785-29. It would have been obvious to combine these

references for reasons that are readily apparent to one of ordinary skill in the art, and for reasons explained in additional detail in the sections that follow.

2. The Claims Recite Well-Known Concepts that Would Have Been Obvious to Implement

As noted above, the asserted claims of the '785 Patent represent nothing more than an arrangement of well-known concepts and features and add nothing to the state of the art at the time of the alleged invention. For each of the concepts represented by the claims, it would have been inherently obvious to add to the teachings of any number of known references and products, including to any of the primary references charted in Exhibits 785-1 – 785-29 to the extent that such reference is alleged to be missing such concept or feature.

3. Additional Reasons to Combine

In addition to the information contained elsewhere in these invalidity contentions, including in Exhibits 785-1 – 785-29, Southwest has identified additional motivations and reasons to combine the various references. Southwest notes that in *KSR Int'l Co. v. Teleflex Inc.*, the Supreme Court held that "[i]n determining whether the subject matter of a patent claim is obvious, neither the particular motivation nor the avowed purpose of the patentee controls. What matters is the objective reach of the claim. If the claim extends to what is obvious, it is invalid under § 103." 550 U.S. 398, 127 S.Ct. 1727, 1742 (2007).

KSR further illustrated several ways in which the subject matter of a patent claim may be shown to be obvious. For instance, "[o]ne of the ways in which a patent's subject matter can be proved obvious is by noting that there existed at the time of invention a known problem for which there was an obvious solution encompassed by the patent's claims." *KSR*, 127 S.Ct. 1727, 1742. The Supreme Court held that it was error to "look only to the problem the patentee was trying to solve." *Id*. Rather, "[t]he question is not whether the combination was obvious to the patentee but

whether the combination was obvious to a person with ordinary skill in the art. Under the correct analysis, any need or problem known in the field of endeavor at the time of invention and addressed by the patent can provide a reason for combining the elements in the manner claimed." *Id*. Further, "[c]ommon sense teaches … that familiar items may have obvious uses beyond their primary purposes, and in many cases a person of ordinary skill will be able to fit the teachings of multiple patents together like pieces of a puzzle." *Id.* Further, a showing that a combination of elements was "obvious to try" may show that it was obvious under § 103. *Id.* For instance, the Supreme Court held that "predictable solutions" using a combination of "known options" may render the subject matter of a patent claim obvious.

When there is a design need or market pressure to solve a problem and there are a finite number of identified, predictable solutions, a person of ordinary skill has good reason to pursue the known options within his or her technical grasp. If this leads to the anticipated success, it is likely the product not of innovation but of ordinary skill and common sense. *Id.* The ways in which the subject matter of a patent claim may be shown to be obvious, identified by *KSR*, are merely illustrative. The main thrust of *KSR* was that "[r]igid preventative rules that deny factfinders recourse to common sense"—such as the overturned "teaching, suggestion, or motivation" test—are neither necessary under our case law nor consistent with it." *KSR*, 127 S.Ct. 1727, 1742-43; citing with approval, e.g., *DyStar Textilfarben GmbH & Co. Deutschland KG v. C.H. Patrick Co.*, 464 F. 3d 1356, 1367 (2006) ("Our suggestion test is in actuality quite flexible and not only permits, but requires, consideration of common knowledge and common sense"); *Alza Corp. v. Mylan Labs., Inc.*, 464 F. 3d 1286, 1291 (2006) ("There is flexibility in our obviousness jurisprudence because a motivation may be found implicitly in the prior art. We do not have a rigid test that requires an actual teaching to combine...").

Although Southwest notes that there is no longer a rigid requirement regarding motivation to combine under *KSR*, Southwest provides the following statements regarding motivation to combine. Multiple teachings, suggestions, and/or reasons to modify any of the references and/or to combine any two or more of the references charted in Exhibits 785-1 – 785-29 come from many sources, including the prior art (specific and as a whole), common knowledge, common sense, predictability, expectations, industry trends, design incentives or need, market demand or pressure, market forces, obvious to try, the nature of the problem faced, and/or knowledge possessed by one of ordinary skill. In addition, it would have been obvious to try combining the prior art references identified above because there were only a finite number of predictable solutions and/or because known work in one field or endeavor prompted variations based on predictable design incentives and/or market forces either in the same field or a different one.

The combination of prior art references identified in these contentions would have been obvious because the combination represents the known potential options with a reasonable expectation of success. Additionally, one of ordinary skill in the art would have been motivated to create combinations identified in these contentions using: known methods to yield predictable results; known techniques in the same way; a simple substitution of one known, equivalent element for another to obtain predictable results; and/or teaching, suggestion, or motivation in the prior art generally. Also, market forces in the industry, and the desire to improve features and performance, would motivate the addition of features to products as they become available, become less expensive, become more commonly used, provide better performance, reduce costs, or predictably achieve other clearly desirable results.

Moreover, in addition to the information contained elsewhere in these contentions, and, in particular, charted in Exhibits 785-1 – 785-29, Southwest has identified additional motivations and

reasons to combine the various references cited herein. In particular, multiple teachings, suggestions, and/or reasons to modify any of the references and/or to combine any two or more of the references charted in Exhibits 785-1 – 785-29 come from many sources, including the prior art (specific and as a whole), common knowledge, common sense, predictability, expectations, industry trends, design incentives or need, market demand or pressure, market forces, obvious to try, the nature of the problem faced, and/or knowledge possessed by one of ordinary skill. In addition, it would have been obvious to try combining the prior art references identified above because there were only a finite number of predictable solutions and/or because known work in one field or endeavor prompted variations based on predictable design incentives and/or market forces either in the same field or a different one. The combination of prior art references identified in these contentions would have been obvious because the claimed combinations represent the known potential options with a reasonable expectation of success.

To the extent that Plaintiffs contend that any of the above-identified references does not expressly or inherently disclose a particular element or limitation, it would have been obvious to a person of ordinary skill in the art to modify the references or to combine their teachings with other prior art references, including the prior art references in these invalidity contentions, in a manner that renders such claims obvious and invalid.

In particular, various references identified above disclose, well before the critical date of the '785 Patent, virtual network managers having a network interface and that communicate via a virtual network defined by a domain name having a public network address, and that include a register module to register devices in the virtual network.

For example, Mehta discloses a system designed to enable secure, bi-directional communication between public network devices and wireless devices on private networks. *See*

Mehta at Abstract. Mehta discloses an Address Management Proxy System (AMPS) that allocates temporary public IP addresses to wireless devices to facilitate communication across public and private networks without exposing private IP addresses. Mehta at Abstract. Mehta's system includes modified DNS/API servers, Address Proxy/Routers, and an Address Management Data Server to dynamically assign public IP addresses to private network devices as needed. *See* Mehta at [0011]. Metha's AMPS uses techniques like Time to Live (TTL) for each IP mapping, ensuring temporary mappings that enhance security by automatically expiring connections. *See* Mehta at [0015]. The system manages a pool of public addresses to allocate dynamically, using protocols like TCP/IP and UDP for seamless data exchange. *See* Mehta at [0011], [0024]. AMPS can support various types of networks and devices beyond traditional IP networks, including ATM networks and other wireless technologies. Metha addresses the challenge of secure and efficient communication between disparate network types, enhancing connectivity options without compromising network security. *See* Mehta at [0041].

As another example, RFC 1383 discloses "a scheme that allows for simple routing" that is "complementary with the classic hierarchical routing approach," while providing "an easy to implement and low cost solution for 'multi-homed' domains." *See* RFC 1383 at 2. Specifically, the RFC-1383 solution is described as "a generalization of the 'MX record' scheme used for mail routing." *See* RFC 1383 at 2. RFC-1383 introduces "RX records" for routing IP packets by associating domain names with preferred gateways by means of "source routing" or "tunneling," or another form of encapsulation protocol. *See* RFC 1383 at 4. To implement this RX routing, a modified DNS lookup is suggested: the source or an early relay makes the routing decision by querying the DNS for RX records, which list gateways with preference levels. *See* RFC 1383 at 6, 9. RFC-1383 describes a network interface integrated with a standard IP router, working alongside

a DNS query manager. *See* RFC 1383 at 12-13. When an Internet Control Message Protocol (ICMP) message is received, the query manager updates the local routing table to ensure that any new packets bound for the specified destination are routed through the real-time forwarder. *Id.* Simultaneously, the query manager sends a DNS request to read the RX records for the destination. *Id.* Upon receiving the response, the query manager selects a gateway and provides this information to the real-time forwarder. *See* RFC 1383 at 11-12. When the real-time forwarder receives a packet, it checks if a gateway for the destination is available. *See* RFC 1383 at 12-13. If so, it inserts the necessary source routing information and forwards the packet—either through the general IP routing program or directly to the network interface linked to the intermediate gateway. *See* RFC 1383 at 12.

As another example, Caronni I discloses "data processing systems and, more particularly, [] a private network using a public-network infrastructure." *See* Caronni I at 1:57–59. Caronni I establishes a "'Supernet,' which is a private network that uses components from a public-network infrastructure." *See* Caronni I at 4:38–39. The Supernet allows organizations to utilize public networks for their enterprise networks, reducing the burden on maintaining network infrastructure. *See* Caronni I at 4:40–43. Caronni I's system uses a separate layer that isolates address names of nodes from addressing schemes and delivery schemes. *See* Caronni I at 4:55–59 ("The Supernet contains a modification to the IP packet format that can be used to separate network behavior from addressing. As a result of the modification, any delivery scheme may be assigned to any address, or group of addresses."). This separation provides flexibility in addressing and delivery methods. When a node attempts to join a Supernet through the SNlogin Script, SASD validates and authenticates the request and then "creates an address mapping between a node ID and the real

address." *See* Caronni I at 9:67–10:18 (SNlogin script "performs a handshaking with SASD to authenticate this information.").

Caronni II discloses "a virtual computer network and more particularly to the addressing of messages sent in a virtual network using data encapsulated in higher level protocols." *See* Caronni II at 1:6–9. In particular, Caronni II addresses the challenge of sending messages to virtual addresses in networks with packet filtering or network address translation (NAT) devices. *See* Caronni II at 3:54–57, 8:14–25. Caronni II introduces an extended virtual address registration process that includes higher-level protocol designations, allowing messages to bypass filtering mechanisms. *See* Caronni II at 2:40–44. Caronni II discloses a virtual network overlay on a physical network, where "[a] virtual network is a logical network overlaid on a physical network." *See* Caronni II at 1:13–14. Caronni II utilizes a virtual address resolution facility that "works with stored virtual address registrations for the virtual network." *See* Caronni II at 4:9–10. These registrations are stored in a Virtual Address Resolution Protocol (VARP) lookup table and include not only the virtual IP address corresponding real IP address but also "a designation of a transport protocol and a port address for an interface between the Application layer and the Transport layer." *See* Caronni II at 4:62–65.

As another example, Hipp discloses "[a] virtual network environment to be used by a set of applications for the express purpose of isolating the applications from other applications on the same node or network[.]" *See* Hipp at Abstract. The "Virtual Network Environment" (VNE) is defined as "a collection of IP addresses related to applications that are contained within the[] VNE or have the potential of being placed in the VNE." *See* Hipp at 2:66–3:2. The system assigns a "unique virtual IP address and virtual hostname to a group of processes that make up the application instance which the instance keeps throughout its execution." *See* Hipp at 6:1–4. This

virtual network identity (VNI) remains with the application regardless of which node it runs on, allowing for transparent movement across machines without modifying the application. *See* Hipp at 6:4–6.

Further, Hipp demonstrates that using a domain name server (DNS) was well-known and understood well before the '785 Patent. Hipp discloses using a DNS in the context of hostname resolution. *See* Hipp at 6:16–25. "The virtual hostname resolves to the virtual IP address for both the applications registered with the VNI framework as well as those that are not registered. This may require configuration of a name service or OS host configuration files." *See* Hipp at 6:16–20. "For example, if an application instance used a virtual IP address of 10.10.0.1 and a virtual hostname of host1055, the standard hostname to IP address resolution mechanisms (e.g. DNS or the /etc/hosts file) would have to be preconfigured to resolve a query of host1055 to IP address 10.10.0.1." *See* Hipp at 6:20–25.

As yet another example, the Cisco VPN Routers and Software Systems provided devise and software enabling fast data communication through network interfaces, facilitated adding and removing devices from the network, including supporting VPN tunnels for such devices, and performing address translation. *See, e.g.*, Cisco 7100 Series VPN Routers, Cisco VPN 3000 Series Concentrator Data Sheet, Cisco VPN 3000 Series Concentrator Data Sheet.

As yet another example, the VMware Systems provided a virtual infrastructure that provided dynamic resource allocation, enabling dynamic management of server resources and provisioning through a management console, and provisioning of new resources. *See, e.g.*, VMware ESX Server Specifications, VMware GSX Server Specifications, VMware Enterprises Continue to Embrace VMware Virtual Infrastructure.

A person of ordinary skill in the art would have been motivated to combine the above references to incorporate the different beneficial technical features provided by each of the above references. Modifying the above references would have only required simple substitution, would not have required extensive experimentation, and would have yielded predictable results.

* * *

In addition to the specific combinations of prior art and the specific combinations of groups of prior art disclosed above, Southwest reserves the right to rely on any other combination of any prior art references disclosed herein. Southwest further reserves the right to rely upon combinations of prior art references disclosed within the prosecution history of the references cited herein.

The references charted in Exhibits 785-1 – 785-29 disclose the elements of the asserted claims of the '785 Patent explicitly and/or inherently and may also be relied upon to show the state of the art at the time of the alleged invention. The suggested obviousness combinations are provided in the alternative to Southwest's anticipation contentions and are not to be construed to suggest that any reference included in the combinations is not itself anticipatory.

C. OGP: Charts Setting Forth Where in the Prior Art References Each Element of the Asserted Claims Are Found

Pursuant to the Court's OGP, charts setting forth where specifically in each alleged item of prior art each element of each Asserted Claim of the '785 Patent is found are attached as Exhibits 785-1 – 785-29.

D. Other Relevant Prior Art References

In addition to the references identified above and charted in Exhibits 785-1 – 785-29, each of the references below is relevant to the '785 Patent, as it relates to the state of the art. Southwest

reserves the right to amend its contentions to rely on any of the below references alone or in combination with any other references identified in these contentions.

Inventor/Author	Country	Issue/Publication No.	Filed Date
Hasan S. Alkhatib et al.	US	6,119,171	Sept. 12, 2000
Hasan S. Alkhatib et al.	US	7,139,828	Nov. 21, 2006
Hasan S. Alkhatib et al.	US	2004/0044778	Aug. 30, 2002
Jan Forslöw	US	7,155,518	January 8, 2001
Barrett Morris Kreiner et al.	US	2008/0232295	November 27, 2002
Anthony J. Li et al.	US	5,473,599	December 5, 1995
Changwen Lui et al.	US	2004/0120295	December 19, 2002
Samir Mehta et al.	WO	2002/102012A2	June 10, 2002
Emily L. Hipp	US	7,146,431	Dec. 5, 2006
Emily L. Hipp	US	7,210,147	Oct. 5, 2000
Can C. Aysan et al.	US	7,379,465	December 7, 2001
Qiaofeng Zhou	US	2002/0138578	January 24, 2001
Ashar Aziz	US	6,643,701	Nov. 17, 1999
Moon-Jeong Choi	US	2002/0040397	October 2, 2001
Germano Caronni et al.	US	6,798,782	Dec. 10, 1999
Germano Caronni et al.	US	7,685,309	Aug. 11, 2005 – priority Dec. 10, 1999
Germano Caronni et al.	US	7,765,581	Dec. 10, 1999
David Spooner	US	8,743,891	Feb. 24, 2004 – priority Aug. 24, 2001
Qiaofend Zhou	US	6,950,879	Jan. 24, 2001
John Keane et al.	US	6,996,628	April 11, 2001
Robert P. St. Peirre et al.	US	7,254,835	Jan. 4, 2002
Robert P. St. Peirre et al.	US	7,890,633	Feb. 13, 2003
James Russell Godwin	US	7,519,721	April 4, 2008 – priority Jan. 17. 2001
Luis F. Cabrera	US	7,899,047	Aug. 13, 2007 – priority Nov. 27, 2001
Werner Lindemann	US	2002/0010796	Jan. 24, 2002
Thomas T. Nguyen	US	2002/0016926	April 26, 2001
Samuel Bendinelli	US	2002/0029276	April 11, 2001
Jheroen P. Dorenbosch	US	2002/0138622	March 21, 2001
John Andrew Aiken JR.	US	2002/0178268	May 22, 2001
Yuefeng Liu	US	2002/0154635	April 23, 2001
Glenn C. Scott	US	2004/0019633	July 24, 2002
Glen Ceniza	US	2002/0186698	June 12, 2001
Germano Caronni et al.	WO	01/43329	Dec. 8, 2000

Inventor/Author	Country	Issue/Publication No.	Filed Date
Germano Caronni et al.	WO	01/45351	Dec. 8, 2000
Germano Caronni et al.	WO	01/43355	Dec. 11, 2000
Germano Caronni et al.	WO	01/43356	Dec. 11, 2000
Germano Caronni et al.	WO	01/43369	Dec. 11, 2000
Germano Caronni et al.	WO	01/43391	Dec. 11, 2000
Holger Karl et al.	WO	2004/075506	Feb. 16, 2004
M. Skye Poier	CA	2316428	Pub. Feb. 18, 2002
Robert P. St. Peirre et al.	UK	2384667	Pub. July 30, 2003
Microsoft Corporation, "Virtual Private Networking," *Microsoft TechNet – Networking & RAS Technology Center*			Pub. Jan. 17, 2000
C. Perkins, "IP Mobility Support for IPv4," *Request for Comments: 3220*, Internet Engineering Task Force			Jan. 18, 2002
C. Perkins, "Mobile IP," *IEEE Communications Magazine*, IEEE Communications Society			Pub. May 1997
G. Caronni et al., "Virtual Enterprise Networks: The Next Generation of Secure Enterprise Networking," Annual Computer Security Applications Conference (2000)			Pub. 2000
VPN 3000 Series Concentrator Getting Started; Cisco Systems - Https://Web.Archive.Org/Web/20030308052045/Http://Www.Cisco.Com/Application/Pdf/En/Us/Guest/Products/Ps2284/C1692/Ccmigration_09186a00801021e2.Pdf			Dated November 2001; Pub. At least by March 8, 2003
Rekhter, Y. et al., Network Working Group Request for Comment (RFC): 1918, entitled Address Allocation for Private Internets			Pub. Feb. 1996
Fox, B. et al., Network Working Group Request for Comment (RFC): 2685, entitled			Pub. Sept. 1999

Inventor/Author	Country	Issue/Publication No.	Filed Date
Virtual Private Networks Identifier			
Gleeson, B. et al., Network Working Group Request for Comment (RFC): 2764, entitled A Framework for IP Based Virtual Private Networks			Pub. Feb. 2000
Lim, et al., "Customizable virtual private network service with QoS" *Computer Networks*, Volume 36, Issue 1, Pages 137–151, Elsevier Science B.V.			Pub. July 2001
Okazaki, Naonobu et al., "An Efficient Method for Private Network Management Using IP Address Translation," T.IEE Japan, Vo. 121-C, No. 10, 2001			Pub. 2001
Kato, et al., "Mobile IP Using Private IP Addresses," Proceedings of the Sixth IEEE Symposium on Computers and Communications			Pub. July 2001
Zaccone, et al., "Address reuse in the Internet, adjourning or suspending the adoption of IP next generation?," Proceedings of IEEE International Conference on Networks 2000 (ICON 2000) Networking Trends and Challenges in the New Millenium			Pub. 2000
A. Kara, "Secure Remote Access from Office to Home," *IEEE Communications Magazine*, Vol. 39, Issue 10, pp. 68-72			Pub. Oct. 1, 2001
H. Liu, "Mobile Domain Name System An Alternative for Mobile IP," Proceedings of the 8th Annual International Conference on Communications Systems 2002 (ICCS 2002)			Pub. 2002

VII. THE '326 PATENT IS INVALID UNDER 35 U.S.C. §§ 102 AND/OR 103

A. The '326 Patent Priority Date

Plaintiff's Infringement Contentions allege the asserted claims of the '326 Patent have a filing date of January 12, 2004.

B. Identification of Prior Art that Anticipates or Renders Obvious the Asserted Claims of the '326 Patent

Southwest contends that the prior art references listed below and charted in Exhibits 326-1 – 326-11 anticipate and/or render obvious, alone or in combination, one or more of the asserted claims of the '326 Patent.

Prior Art Reference	Publication Date
U.S. Patent Application Publication No. 2003/022473 ("Yamaura")	Filed – February 20, 2003 Published – December 4, 2003 This reference is prior art under at least Pre-AIA 35 U.S.C. § 102(e).
U.S. Patent No. 6,510,133 ("Uesugi")	Filed – January 21, 1999 Issued – January 21, 2003 This reference is prior art under at least Pre-AIA 35 U.S.C. § 102(e).
JP Patent Application Publication No. JP2002319917 ("Mori")	Filed – April 24, 2001 Published – October 31, 2002 This reference is prior art under at least Pre-AIA 35 U.S.C. § 102(b).
JP Patent Application Publication No. JP2003309533 ("Miyoshi")	Filed – April 17, 2002 Published – October 31, 2003 This reference is prior art under at least Pre-AIA 35 U.S.C. § 102(a).
JP Patent Application Publication No. JPH11113049 ("Koga")	Filed – September 30, 1997 Published – April 23, 1999

Prior Art Reference	Publication Date
	This reference is prior art under at least Pre-AIA 35 U.S.C. § 102(b).
U.S. Patent No. 7,418,050 ("Gardner")	Filed – February 26, 2003 Issued – August 26, 2008 This reference is prior art under at least Pre-AIA 35 U.S.C. § 102(e).
PCT Patent Application Publication No. WO 00/38387 ("Baldemair")	Filed – December 21, 1999 Published – October 10, 2001 This reference is prior art under at least Pre-AIA 35 U.S.C. § 102(b).
Thompson, D. E., "Modelling Adjacent Channel Interference in 3G Networks," THE INSTITUTE OF ELECTRICAL ENGINEERS (2003) ("Thompson")	Published – 2003 This reference is prior art under at least Pre-AIA 35 U.S.C. § 102(e).
Weste, Neil et al., "VLSI for OFDM," IEEE COMMUNICATIONS MAGAZINE (Oct. 1998) ("Weste")	Published – 2003 This reference is prior art under at least Pre-AIA 35 U.S.C. §§ 102(b) and 102(e).
"WLAN Channel Bonding: Causing Greater Problems Than It Solves" ("Texas Instruments White Paper")	Published – September 2003 This reference is prior art under at least Pre-AIA 35 U.S.C. § 102(e).
"WLAN Solutions: TNETW1130 Converged Single-Chip MAC and Baseband Processor for IEEE 802.11 a/b/g" ("TI Baseband Processor for IEEE 802.11")	Published – 2003 This reference is prior art under at least Pre-AIA 35 U.S.C. § 102(e).

Plaintiffs assert claims 1, 4, and 18 of the '326 Patent against Southwest in this lawsuit. These claims are invalid because the '326 Patent fails to meet one or more of the requirements for patentability. The individual bases for invalidity are provided below and in Exhibits 326-1 – 326-

11. Each of the prior art references, the underlying work, and/or the underlying apparatus or method qualifies as prior art under one or more sections of Pre-AIA 35 U.S.C. §§ 102 and/or 103.

In an effort to focus the issues, Southwest has cited representative portions of identified references, even where a reference may contain additional disclosures or support for a particular claim element. Each and every disclosure of the same limitation in the same reference is not necessarily identified. In addition, persons of ordinary skill in the art generally read a prior art reference as a whole and in the context of other publications and literature and in the context of their knowledge as persons of ordinary skill in the art. Thus, to understand and interpret any specific statement or disclosure within a prior art reference, such persons would rely on other information within the reference, along with other publications and their general scientific knowledge and experience in the field. Thus, each prior art reference identified herein should be understood in the context of the reference itself in conjunction with anything incorporated by reference or described as relevant technology by the reference, any documents that are referred to for further understanding by the reference, any product embodying the reference, and any testimony by those with knowledge of the reference, such as the named authors and inventors. Southwest may rely upon uncited portions of the prior art references and on other publications and expert testimony to provide context, and as aids to understanding and interpreting the portions that are cited. Southwest may also rely on uncited portions of the prior art references, other disclosed publications, and the testimony of experts to establish that a person of ordinary skill in the art would have been motivated to modify or combine certain of the cited references so as to render the claims obvious.

Some or all of the asserted claims of the '326 Patent are invalid as anticipated under Pre-AIA 35 U.S.C. § 102 in view of certain ones of the prior art references identified above as detailed

in the claim charts included in Exhibits 326-1 – 326-11, which identify specific examples of where each limitation of the asserted claims of the '326 Patent is found in the prior art references. As explained above, the cited portions of prior art references identified in the attached claim charts are exemplary in nature and representative of the content and teaching of the prior art references, and should be understood in the context of the reference as a whole and as they would be understood by a person of ordinary skill in the art.

To the extent any item of prior art cited above is deemed not to disclose, explicitly or inherently, any limitation of an asserted claim of the '326 Patent, Southwest reserves the right to argue that any difference between that prior art and the corresponding patent claim would have been either inherent in the art or obvious to a person of ordinary skill in the art, even if Southwest has not specifically denoted that the art is to be combined with the knowledge of a person of ordinary skill in the art.

To the extent Plaintiffs argue that any limitation of the asserted claims of the '326 Patent is not explicitly disclosed by an item of prior art identified above and in Exhibits 326-1 – 326-11, any purported differences are such that the claimed subject matter as a whole would have been obvious to one skilled in the art at the time of the alleged invention, in view of the state of the art and knowledge of those skilled in the art. The item of prior art would, therefore, render the relevant claims invalid as obvious under Pre-AIA 35 U.S.C. § 103.

To the extent any of the foregoing references are found not to anticipate the asserted claims of the '326 Patent, the foregoing references render the asserted claims obvious, either alone or in combination with one or more of the other references identified above. One of ordinary skill in the art would have been motivated to combine the various references cited herein so as to disclose each and every limitation of the asserted claims of the '326 Patent.

The prior art identified in Exhibits 326-1 – 326-11 renders one or more asserted claims of the '326 Patent obvious when the references are read alone or in combination with one or more of each other and/or when read in view of the state of the art and knowledge of those skilled in the art.

To the extent that Plaintiff argues that any asserted claim of the '326 Patent is not disclosed or rendered obvious by any reference charted in Exhibits 326-1 – 326-11, the asserted claims nevertheless would have been obvious in light of one or more other references charted in Exhibits 326-1 – 326-11 and in view of the knowledge, experience, and understanding of persons of ordinary skill in the art.

Each and every reference identified is also relevant to the state of the art at the time of the alleged invention. Any of the references disclosed above may be combined with one another to render obvious (and therefore invalid) each of the asserted claims of the '326 Patent. Southwest may rely upon a subset of the above identified references, or all of the references identified above, including all references in charted in Exhibits 326-1 – 326-11, for purposes of obviousness depending on the Court's claim construction, positions taken by Plaintiffs during this litigation, and further investigation and discovery.

1. Example Combinations of the Prior Art

The table below provides an identification of exemplary combinations of prior art references that, based on Southwest's present understanding of Plaintiff's Infringement Contentions and apparent reading of the claims, render obvious one or more of the asserted claims of the '326 Patent. The combinations of references identified below are non-exhaustive, and additional examples are apparent from other combinations of references charted in Exhibits 326-1 – 326-11. Although certain references charted in Exhibits 326-1 – 326-11 are listed variously in the left or right column below, Southwest does not thereby imply any restriction as to which

reference is primary and which reference is secondary in such a combination. Southwest reserves the right to rely on either identified reference in the identified combinations as a primary and/or secondary reference.

Exhibit	Reference	Combination Reference(s)
326-1	Baldemair	Gardner, Koga, Miyoshi, Mori, Yamaura, Uesegi, Texas Instruments White Paper, TI Baseband Processor for IEEE 802.11, and/or one or more references as charted in Exhibits 326-1 – 326-11.
326-2	Gardner	Miyoshi, Koga, Mori, Uesugi, TI Baseband Processor for IEEE 802.11, Yamaura, Texas Instruments White Paper, and/or one or more references as charted in Exhibits 326-1 – 326-11.
326-3	Koga	Gardner, Miyoshi, Mori, Uesugi, Yamaura, TI Baseband Processor for IEEE 802.11, Texas Instruments White Paper, and/or one or more references as charted in Exhibits 326-1 – 326-11.
326-4	Miyoshi	Gardner, Koga, Mori, TI Baseband Processor for IEEE 802.11, Texas Instruments White Paper, Yamaura, Uesugi and/or one or more references as charted in Exhibits 326-1 – 326-11.
326-5	Mori	Gardner, Koga, Miyoshi, Yamaura, Texas Instruments White Paper, TI Baseband Processor for IEEE 802.11, Uesugi and/or one or more references as charted in Exhibits 326-1 – 326-11.
326-6	Texas Instruments White Paper	Gardner, Koga, Miyoshi, Mori, TI Baseband Processor for IEEE 802.11, Uesugi, Yamaura, and/or one or more references as charted in Exhibits 326-1 – 326-11.
326-7	Thompson	Gardner, Koga, Miyoshi, Mori, Uesugi, Yamaura, Texas Instruments White Paper, TI Baseband Processor for IEEE 802.11,

Exhibit	Reference	Combination Reference(s)
		and/or one or more references as charted in Exhibits 326-1 – 326-11.
326-8	TI Baseband Processor for IEEE 802.11	Yamaura, Uesugi, Mori, Miyoshi, Koga, Gardner, Texas Instruments White Paper and/or one or more references as charted in Exhibits 326-1 – 326-11.
326-9	Uesugi	Gardner, Koga, Miyoshi, Mori, Texas Instruments White Paper, TI Baseband Processor for IEEE 802.11, Yamaura, and/or one or more references as charted in Exhibits 326-1 – 326-11.
326-10	Weste	Gardner, Koga, Yamaura, Mori, Miyoshi, Texas Instruments White Paper, TI Baseband Processor for IEEE 802.11, Uesugi, and/or one or more references as charted in Exhibits 326-1 – 326-11.
326-11	Yamaura	Gardner, Koga, Mori, Miyoshi, Texas Instruments White Paper, TI Baseband Processor for IEEE 802.11, Uesugi, and/or one or more references as charted in Exhibits 326-1 – 326-11

It will be understood that, given the similarities between the art, any of Baldemari, Gardner, Koga, Miyoshi, Mori, Texas Instruments White Paper, Thompson, TI Baseband Processor for IEEE 802.11, Uesugi, Weste, and/or Yamaura could be combined with one or more of each other, for example based on the disclosures shown in Exhibits 326-1 – 326-11. It would have been obvious to combine these references for reasons that are readily apparent to one of ordinary skill in the art, and for reasons explained in additional detail in the sections that follow.

2. The Claims Recite Well-Known Concepts that Would Have Been Obvious to Implement

As noted above, the asserted claims of the '326 Patent represent nothing more than an arrangement of well-known concepts and features and add nothing to the state of the art at the time

of the alleged invention. For each of the concepts represented by the claims, it would have been inherently obvious to add to the teachings of any number of known references and products, including to any of the primary references charted in Exhibits 326-1 – 326-11 to the extent that such reference is alleged to be missing such concept or feature.

3. Additional Reasons to Combine

In addition to the information contained elsewhere in these invalidity contentions, including in Exhibits 326-1 – 326-11, Southwest has identified additional motivations and reasons to combine the various references. Southwest notes that in *KSR Int'l Co. v. Teleflex Inc.*, the Supreme Court held that "[i]n determining whether the subject matter of a patent claim is obvious, neither the particular motivation nor the avowed purpose of the patentee controls. What matters is the objective reach of the claim. If the claim extends to what is obvious, it is invalid under § 103." 550 U.S. 398, 419 (2007).

KSR further illustrated several ways in which the subject matter of a patent claim may be shown to be obvious. For instance, "[o]ne of the ways in which a patent's subject matter can be proved obvious is by noting that there existed at the time of invention a known problem for which there was an obvious solution encompassed by the patent's claims." *KSR*, 127 S.Ct. at 1742. The Supreme Court held that it was an error to "look only to the problem the patentee was trying to solve." *Id*. Rather, "[t]he question is not whether the combination was obvious to the patentee but whether the combination was obvious to a person with ordinary skill in the art. Under the correct analysis, any need or problem known in the field of endeavor at the time of invention and addressed by the patent can provide a reason for combining the elements in the manner claimed." *Id*. Further, "[c]ommon sense teaches … that familiar items may have obvious uses beyond their primary purposes, and in many cases a person of ordinary skill will be able to fit the teachings of multiple patents together like pieces of a puzzle." *Id.* Further, a showing that a combination of elements

was "obvious to try" may show that it was obvious under § 103. *Id.* For instance, the Supreme Court held that "predictable solutions" using a combination of "known options" may render the subject matter of a patent claim obvious.

When there is a design need or market pressure to solve a problem and there are a finite number of identified, predictable solutions, a person of ordinary skill has good reason to pursue the known options within his or her technical grasp. If this leads to the anticipated success, it is likely the product not of innovation but of ordinary skill and common sense. *Id.* The ways in which the subject matter of a patent claim may be shown to be obvious, identified by *KSR*, are merely illustrative. The main thrust of *KSR* was that "[r]igid preventative rules that deny factfinders recourse to common sense"—such as the overturned "teaching, suggestion, or motivation" test—are neither necessary under our case law nor consistent with it." *KSR*, 127 S.Ct. at 1742-43; citing with approval, *e.g.*, *DyStar Textilfarben GmbH & Co. Deutschland KG v. C.H. Patrick Co.*, 464 F. 3d 1356, 1367 (2006) ("Our suggestion test is in actuality quite flexible and not only permits, but requires, consideration of common knowledge and common sense"); *Alza Corp. v. Mylan Labs., Inc.*, 464 F. 3d 1286, 1291 (2006) ("There is flexibility in our obviousness jurisprudence because a motivation may be found implicitly in the prior art. We do not have a rigid test that requires an actual teaching to combine . . .").

Although Southwest notes that there is no longer a rigid requirement regarding motivation to combine under *KSR*, Southwest provides the following statements regarding motivation to combine. Multiple teachings, suggestions, and/or reasons to modify any of the references and/or to combine any two or more of the references charted in Exhibits 326-1 – 326-11 come from many sources, including the prior art (specific and as a whole), common knowledge, common sense, predictability, expectations, industry trends, design incentives or need, market demand or pressure,

market forces, obvious to try, the nature of the problem faced, and/or knowledge possessed by one of ordinary skill. In addition, it would have been obvious to try combining the prior art references identified above because there were only a finite number of predictable solutions and/or because known work in one field or endeavor prompted variations based on predictable design incentives and/or market forces either in the same field or a different one.

The combination of prior art references identified in these contentions would have been obvious because the combination represents the known potential options with a reasonable expectation of success. Additionally, one of ordinary skill in the art would have been motivated to create combinations identified in these contentions using: known methods to yield predictable results; known techniques in the same way; a simple substitution of one known, equivalent element for another to obtain predictable results; and/or teaching, suggestion, or motivation in the prior art generally. Also, market forces in the industry, and the desire to improve features and performance, would motivate the addition of features to products as they become available, become less expensive, become more commonly used, provide better performance, reduce costs, or predictably achieve other clearly desirable results.

Moreover, in addition to the information contained elsewhere in these contentions, and, in particular, charted in Exhibits 326-1 – 326-11, Southwest has identified additional motivations and reasons to combine the various references cited herein. In particular, multiple teachings, suggestions, and/or reasons to modify any of the references and/or to combine any two or more of the references charted in Exhibits 326-1 – 326-11 come from many sources, including the prior art (specific and as a whole), common knowledge, common sense, predictability, expectations, industry trends, design incentives or need, market demand or pressure, market forces, obvious to try, the nature of the problem faced, and/or knowledge possessed by one of ordinary skill. In

addition, it would have been obvious to try combining the prior art references identified above because there were only a finite number of predictable solutions and/or because known work in one field or endeavor prompted variations based on predictable design incentives and/or market forces either in the same field or a different one. The combination of prior art references identified in these contentions would have been obvious because the claimed combinations represent the known potential options with a reasonable expectation of success.

To the extent that Plaintiffs contends that any of the above-identified references does not expressly or inherently disclose a particular element or limitation, it would have been obvious to a person of ordinary skill in the art to modify the references or to combine their teachings with other prior art references, including the prior art references in these invalidity contentions, in a manner that renders such claims obvious and invalid.

For example, many of the prior art references charted in Exhibits 326-1 – 326-11 share a goal of increasing the data rates and data throughput in a network. Various references identified in these Preliminary Infringement Contentions disclose, well before the alleged critical date of the '326 patent, increased speed in data transmission: "In order to increase the speed of the communication channel, it is necessary to allocate a wide frequency bandwidth for each transmission channel." Mori at [0029].

For example, Yamaura discloses "a convention radio communication system" that "accords to the scheme called HiSWANa," where "the frequencies of the center carrier are 5.17 GHz, 5.19 GHz, 5.21 GHz, and 5.23 GHz, and a signal band of 20 MHz (including a guard band) is assigned to each carrier." Yamaura at [0005]. A person of ordinary skill in the art would understand that using a HiSWANa (high-speed wireless access network) scheme for optimal guard band usage is comparable to increasing data rate and throughput.

As another example, Mori discloses selecting adjacent channels comprised of data subcarriers and separated by guard bands: "[t]he radio access system put into practical use uses a bandwidth of 100 MHz in a 5 GHz band, and arranges four channels having an interval of 20 MHz in the 5-GHz band, and performs communication using each channel." Mori at [0003]. Further, Mori discloses partially filling the frequency gap, or guard band, between the two adjacent channels by adding data subcarriers into the guard band: " . . . the spectrum shown in h) increases the number of data carriers by allocating subcarrier data to the guard band between the continuous bands B1 and B2." Mori at [0131-32]. Further still, Mori discloses filling the guard band using fast fourier transform or inverse fast fourier transform: "subcarriers other than the pilot signal for transmitting the information signal are based on a complex signal sequence supplied to the IFFT," " . . . [t]he IFFT circuit 14 performs inverse Fourier transform on the frequency domain information relating to the signal point position for each subcarrier supplied for each of the plurality of operation blocks, and obtains the time domain information for each IFFT circuit block." Mori at [0012], [0051].

As another example, Gardner discloses combining a first and second channel using channel bonding: "[v]arious options for IEEE 802.11a extensions that would support higher data rates have been considered. One option is to use multiple channels to transmit the data stream; for example, data could be multiplexed between two 54 Mbps streams occupying two contiguous 20 MHz channels to obtain a rate of 108 Mbps." Gardner at [2:15-26].

As set forth above, the market and industry for the increase in data rates and data throughput in a network was well established and known by one of ordinary skill in the art. A person of ordinary skill would know, for example, to consider any feature of increasing data rates and throughput already implemented by major industry players, including systems such as Texas

Instruments Baseband Processor for IEEE 802.11, which contemplates increasing data throughput and channel bonding.

* * *

In addition to the specific combinations of prior art and the specific combinations of groups of prior art disclosed above, Southwest reserves the right to rely on any other combination of any prior art references disclosed herein. Southwest further reserves the right to rely upon combinations of prior art references disclosed within the prosecution history of the references cited herein.

The references charted in Exhibits 326-1 – 326-11 disclose the elements of the asserted claims of the '326 Patent explicitly and/or inherently and may also be relied upon to show the state of the art at the time of the alleged invention. The suggested obviousness combinations are provided in the alternative to Southwest's anticipation contentions and are not to be construed to suggest that any reference included in the combinations is not itself anticipatory.

C. OGP: Charts Setting Forth Where in the Prior Art References Each Element of the Asserted Claims Are Found

Pursuant to the Court's OGP, charts setting forth where specifically in each alleged item of prior art each element of each Asserted Claim of the '326 Patent is found are attached as Exhibits 326-1 – 326-11.

D. Other Relevant Prior Art References

In addition to the references identified above and charted in Exhibits 326-1 – 326-11, each of the references below is relevant to the '326 Patent, as it relates to the state of the art. Southwest reserves the right to amend its contentions to rely on any of the below references alone or in combination with any other references identified in these contentions.

Inventor/Author	Country	Issue/Publication No.	Filed Date
IEEE STANDARD FOR INFORMATION TECHNOLOGY. ANSI/ IEEE Std 802.11, 1999 Edition, "Part 11: Wireless LAN Medium Access Control (MAC) and Physical Layer (PHY) specifications: High-speed Physical Layer in the 5 GHz Band"			Published 1999
IEEE STANDARD FOR INFORMATION TECHNOLOGY. ANSI/ IEEE "Part 11: Wireless LAN Medium Access Control (MAC) and Physical Layer (PHY) specifications: Higher-Speed Physical Layer Extension in the 2.4 GHz Band ANSI/ IEEE "IEEE Std 802.11b-1999."			Published 1999
IEEE STANDARD FOR INFORMATION TECHNOLOGY. ANSI/ IEEE "Part 11: Wireless LAN Medium Access Control (MAC) and Physical Layer (PHY) specifications Amendment 4: Further Higher Data Rate Extension in the 2.4 GHz Band"			Published 2003
Li et al., "802.11n Channel Model Validation"			Published November 2003

VIII. THE '469 PATENT IS INVALID UNDER 35 U.S.C. §§ 102 AND/OR 103

A. The '469 Patent Priority Date

Plaintiff's Infringement Contentions allege the asserted claims of the '469 Patent have a filing date of September 29, 2003. Southwest disputes the alleged priority date of September 29, 2003. In particular, several aspects of the claims are not adequately supported by the written

description of the provisional application. In one example, asserted claim 32 recites "[t]he Internet Hotspot of claim 25, wherein the wireless connection is one of an 802.11a wireless area network, an 802.11b wireless area network, an 802.11g wireless area network, **and an 802.11n wireless area network**." But the 802.11g standard was not adopted until 2009, and indeed had not even been drafted by September 2003. The patentee could not have been in possession of a system employing a standard that did not, at the time, exist. And the patentee made clear that provisional application No. 60/507,022, on which the claimed priority date is premised discloses only the then-available 802.11b, 802.11g, and 802.11a standards:

> Uses existing technology combined with this unique application. Readily available network technology. Utilizes 802.11b, 802.11g or 802.11a in the present embodiment.

09/29/2003 Specification.

Although it disputes the alleged priority date, Southwest nevertheless applies September 29, 2003, as the priority date for the purpose of these Preliminary Invalidity Contentions, as the Asserted Patent is invalid under 35 U.S.C. Sections 102 and 103 even if it were entitled to an artificially early date of priority. To the extent that Intellectual Ventures modifies its alleged priority date, Southwest may respond and challenge that date to the extent required by law to satisfy its burden.

B. Identification of Prior Art that Anticipates or Renders Obvious the Asserted Claims of the '469 Patent

Southwest contends that the prior art references listed below and charted in Exhibits 469-1 – 469-13 anticipate and/or render obvious, alone or in combination, one or more of the asserted claims of the '469 Patent.

Prior Art Reference	Publication Date
Airpath Wireless Hot Spot	At least by June 2003 This reference is prior art under at least Pre-AIA 35 U.S.C. §§ 102(a) and (g).
U.S. Patent No. 6,894,990 ("Agarwal")	Filed – October 13, 2000 Issued – May 17, 2005 This reference is prior art under at least Pre-AIA 35 U.S.C. § 102(e).
U.S. Patent Application Publication No. 2002/0138625 ("Bruner")	Filed – March 21, 2001 Published – September 26, 2002 This reference is prior art under at least Pre-AIA 35 U.S.C. §§ 102(a), § 102(b) and § 102(e).
U.S. Patent No. 6,445,777 ("Clark")	Filed – December 21, 1998 Issued – September 3, 2002 This reference is prior art under at least Pre-AIA 35 U.S.C. §§ 102(a), (b), (e) and (g).
Connexion by Boeing	At least by June 2003 This reference is prior art under at least Pre-AIA 35 U.S.C. §§ 102(a), (b) and (g).
DeSanctis, et al., "Aeronautical Communications for Personal and Multimedia Services via Satellite," AM. INST. OF AERONAUTICAL. AND ASTRONAUTICS ("DeSanctis")	Published at least by April 2003 This reference is prior art under at least Pre-AIA 35 U.S.C. §§ 102(a), (b), and (g).
Jahn, et al., "Dimensioning of Aeronautical Satellite Services," AM. INST. OF AERONAUTICAL. AND ASTRONAUTICS ("Jahn I")	Published at least by October 2002 This reference is prior art under at least Pre-AIA 35 U.S.C. §§ 102(a) and (g).
Jahn, et al., "Passenger Multimedia Service Concept via Future Satellite Systems" DGLR JAHRBUCH ("Jahn II")	Published – 2002 This reference is prior art under at least Pre-AIA 35 U.S.C. §§ 102(a), (b) and (g).
U.S. Patent Application No. 2003/0051041 ("Kalavade")	Filed – August 6, 2002

Prior Art Reference	Publication Date
	Published – March 13, 2003 This reference is prior art under at least Pre-AIA 35 U.S.C. §§ 102(a), (b), (e), and (g).
Maritime Telecommunications Network Cruise Ship Internet Services	At least by June 2003 This reference is prior art under at least Pre-AIA 35 U.S.C. §§ 102(a) and (g).
U.S. Patent Application No. 2007/0008937 ("Mody")	Filed – July 21, 2004 Priority – July 22, 2003 Published – January 11, 2007 This reference is prior art under at least Pre-AIA 35 U.S.C. §§ 102(a), (e), and (g).
U.S. Patent Application No. 2003/0055975 ("Nelson")	Filed – June 19, 2001 Published – March 28, 2003 This reference is prior art under at least Pre-AIA 35 U.S.C. §§ 102(a), (e) and (g).
U.S. Patent Application No. 2004/0109449 ("Seo")	Filed – August 15, 2003 Published – June 10, 2004 This reference is prior art under at least Pre-AIA 35 U.S.C. §§ 102(a), (e), and (g).
Suwanateep, Manasuda, "Inflight Internet Connectivity Technology and Its Application on E-Commerce," U. OF THAILAND (2002) ("Suwanateep")	Published at least by July 2002 This reference is prior art under at least Pre-AIA 35 U.S.C. §§ 102(a), (b), and (g).
Tenzing Global	At least by April 2001 This reference is prior art under at least Pre-AIA 35 U.S.C. §§ 102(a), (b), and (g).
Wireless Cabin	At least by February 9, 2003 This reference is prior art under at least Pre-AIA 35 U.S.C. §§ 102(a) and (g).

Prior Art Reference	Publication Date
U.S. Patent Application Publication No. 2003/0050041 ("Wu")	Filed – September 7, 2001 Published – March 13, 2003 This reference is prior art under at least Pre-AIA 35 U.S.C. §§ 102(a), (e), and (g).

Plaintiffs assert claims 24, 25, 26, 28, and 32 of the '469 Patent against Southwest in this lawsuit. These claims are invalid because the '469 Patent fails to meet one or more of the requirements for patentability. The individual bases for invalidity are provided below and in Exhibits 469-1 – 469-13. Each of the prior art references, the underlying work, and/or the underlying apparatus or method qualifies as prior art under one or more sections of Pre-AIA 35 U.S.C. §§ 102 and/or 103.

In an effort to focus the issues, Southwest has cited representative portions of identified references, even where a reference may contain additional disclosures or support for a particular claim element. Each and every disclosure of the same limitation in the same reference is not necessarily identified. In addition, persons of ordinary skill in the art generally read a prior art reference as a whole and in the context of other publications and literature and in the context of their knowledge as persons of ordinary skill in the art. Thus, to understand and interpret any specific statement or disclosure within a prior art reference, such persons would rely on other information within the reference, along with other publications and their general scientific knowledge and experience in the field. Thus, each prior art reference identified herein should be understood in the context of the reference itself in conjunction with anything incorporated by reference or described as relevant technology by the reference, any documents that are referred to for further understanding by the reference, any product embodying the reference, and any testimony by those with knowledge of the reference, such as the named authors and inventors.

Southwest may rely upon uncited portions of the prior art references and on other publications and expert testimony to provide context, and as aids to understanding and interpreting the portions that are cited. Southwest may also rely on uncited portions of the prior art references, other disclosed publications, and the testimony of experts to establish that a person of ordinary skill in the art would have been motivated to modify or combine certain of the cited references so as to render the claims obvious.

Some or all of the asserted claims of the '469 Patent are invalid as anticipated under Pre-AIA 35 U.S.C. § 102 in view of certain ones of the prior art references identified above as detailed in the claim charts included in Exhibits 469-1 – 469-13, which identify specific examples of where each limitation of the asserted claims of the '469 Patent is found in the prior art references. As explained above, the cited portions of prior art references identified in the attached claim charts are exemplary in nature and representative of the content and teaching of the prior art references, and should be understood in the context of the reference as a whole and as they would be understood by a person of ordinary skill in the art.

To the extent any item of prior art cited above is deemed not to disclose, explicitly or inherently, any limitation of an asserted claim of the '469 Patent, Southwest reserves the right to argue that any difference between that prior art and the corresponding patent claim would have been either inherent in the art or obvious to a person of ordinary skill in the art, even if Southwest has not specifically denoted that the art is to be combined with the knowledge of a person of ordinary skill in the art.

To the extent Plaintiffs argue that any limitation of the asserted claims of the '469 Patent is not explicitly disclosed by an item of prior art identified above and in Exhibits 469-1 – 469-13, any purported differences are such that the claimed subject matter as a whole would have been

obvious to one skilled in the art at the time of the alleged invention, in view of the state of the art and knowledge of those skilled in the art. The item of prior art would, therefore, render the relevant claims invalid as obvious under Pre-AIA 35 U.S.C. § 103.

To the extent any of the foregoing references are found not to anticipate the asserted claims of the '469 Patent, the foregoing references render the asserted claims obvious, either alone or in combination with one or more of the other references identified above. One of ordinary skill in the art would have been motivated to combine the various references cited herein so as to disclose each and every limitation of the asserted claims of the '469 Patent.

The prior art identified in Exhibits 469-1 – 469-13 renders one or more asserted claims of the '469 Patent obvious when the references are read alone or in combination with one or more of each other and/or when read in view of the state of the art and knowledge of those skilled in the art.

To the extent that Plaintiff argues that any asserted claim of the '469 Patent is not disclosed or rendered obvious by any reference charted in Exhibits 469-1 – 469-13, the asserted claims nevertheless would have been obvious in light of one or more other references charted in Exhibits 469-1 – 469-13 and in view of the knowledge, experience, and understanding of persons of ordinary skill in the art.

Each and every reference identified is also relevant to the state of the art at the time of the alleged invention. Any of the references disclosed above may be combined with one another to render obvious (and therefore invalid) each of the asserted claims of the '469 Patent. Southwest may rely upon a subset of the above identified references, or all of the references identified above, including all references charted in Exhibits 469-1 – 469-13, for purposes of obviousness depending

on the Court's claim construction, positions taken by Plaintiffs during this litigation, and further investigation and discovery.

1. Example Combinations of the Prior Art

The table below provides an identification of exemplary combinations of prior art references that, based on Southwest's present understanding of Plaintiff's Infringement Contentions and apparent reading of the claims, render obvious one or more of the asserted claims of the '469 Patent. The combinations of references identified below are non-exhaustive, and additional examples are apparent from other combinations of references charted in Exhibits 469-1 – 469-13. Although certain references charted in Exhibits 469-1 – 469-13 are listed variously in the left or right column below, Southwest does not thereby imply any restriction as to which reference is primary and which reference is secondary in such a combination. Southwest reserves the right to rely on either identified reference in the identified combinations as a primary and/or secondary reference.

Exhibit	Reference	Combination Reference(s)
469-1	Agarwal	Airpath Wireless Hot Spot, Bruner, Clark, Connexion by Boeing, DeSanctis, Jahn II, Kalavade, Mody, MTN Cruise Ship Internet Services, Nelson, Seo, Suwanateep, Tenzing Global, Wireless Cabin, Wu, and/or one or more references as charted in Exhibits 469-1 – 469-13.
469-2	Airpath Wireless Hot Spot	Agarwal, Bruner, Clark, Connexion by Boeing, DeSanctis, Jahn II, Kalavade, Mody, MTN Cruise Ship Internet Services, Nelson, Seo, Suwanateep, Tenzing Global, Wireless Cabin, Wu, and/or one or more references as charted in Exhibits 469-1 – 469-13.
469-3	Bruner	Airpath Wireless Hot Spot, Agarwal, Clark, Connexion by Boeing, DeSanctis,

Exhibit	Reference	Combination Reference(s)
		Jahn II, Kalavade, Mody, MTN Cruise Ship Internet Services, Nelson, Seo, Suwanateep, Tenzing Global, Wireless Cabin, Wu, and/or one or more other references as charted in Exhibits 469-1 – 469-13.
469-4	Clark	Airpath Wireless Hot Spot, Agarwal, Bruner, Connexion by Boeing, DeSanctis, Jahn II, Kalavade, Mody, MTN Cruise Ship Internet Services, Nelson, Seo, Suwanateep, Tenzing Global, Wireless Cabin, Wu, and/or one or more references as charted in Exhibits 469-1 – 469-13.
469-5	Connexion by Boeing	Airpath Wireless Hot Spot, Agarwal, Bruner, Clark, DeSanctis, Jahn II, Kalavade, Mody, MTN Cruise Ship Internet Services, Nelson, Seo, Suwanateep, Tenzing Global, Wireless Cabin, Wu, and/or one or more references as charted in Exhibits 469-1 – 469-13.
469-6	Jahn I	Airpath Wireless Hot Spot, Agarwal, Bruner, Clark, Connexion by Boeing, DeSanctis, Jahn II, Kalavade, Mody, MTN Cruise Ship Internet Services, Nelson, Seo, Suwanateep, Tenzing Global, Wireless Cabin, Wu, and/or one or more references as charted in Exhibits 469-1 – 469-13.
469-7	Jahn II	Airpath Wireless Hot Spot, Agarwal, Bruner, Clark, Connexion by Boeing, DeSanctis, Kalavade, Mody, MTN Cruise Ship Internet Services, Nelson, Seo, Suwanateep, Tenzing Global, Wireless Cabin, Wu, and/or one or more references as charted in Exhibits 469-1 – 469-13.
469-8	Nelson	Airpath Wireless Hot Spot, Agarwal, Bruner, Clark, Connexion by Boeing, DeSanctis, Jahn II, Kalavade, Mody, MTN Cruise Ship Internet Services, Seo, Suwanateep, Tenzing Global, Wireless

Exhibit	Reference	Combination Reference(s)
		Cabin, Wu, and/or one or more references as charted in Exhibits 469-1 – 469-13.
469-9	Maritime Telecommunications Network Cruise Ship Internet Services	Airpath Wireless Hot Spot, Agarwal, Bruner, Clark, Connexion by Boeing, DeSanctis, Jahn II, Kalavade, Mody, Nelson, Seo, Suwanateep, Tenzing Global, Wireless Cabin, Wu, and/or one or more references as charted in Exhibits 469-1 – 469-13.
469-10	Suwanateep	Airpath Wireless Hot Spot, Agarwal, Bruner, Clark, Connexion by Boeing, DeSanctis, Jahn II, Kalavade, Mody, MTN Cruise Ship Internet Services, Nelson, Seo, Tenzing Global, Wireless Cabin, Wu, and/or one or more references as charted in Exhibits 469-1 – 469-13.
469-11	Tenzing Global	Airpath Wireless Hot Spot, Agarwal, Bruner, Clark, Connexion by Boeing, DeSanctis, Jahn II, Kalavade, Mody, MTN Cruise Ship Internet Services, Nelson, Seo, Suwanateep, Wireless Cabin, Wu, and/or one or more references as charted in Exhibits 469-1 – 469-13.
469-12	Wireless Cabin	Airpath Wireless Hot Spot, Agarwal, Bruner, Clark, Connexion by Boeing, DeSanctis, Jahn II, Kalavade, Mody, MTN Cruise Ship Internet Services, Nelson, Seo, Suwanateep, Tenzing Global, Wu, and/or one or more references as charted in Exhibits 469-1 – 469-13.
469-13	Wu	Airpath Wireless Hot Spot, Agarwal, Bruner, Clark, Connexion by Boeing, DeSanctis, Jahn II, Kalavade, Mody, MTN Cruise Ship Internet Services, Nelson, Seo, Suwanateep, Tenzing Global, Wireless Cabin, and/or one or more references as charted in Exhibits 469-1 – 469-13.

It will be understood that, given the similarities between the art, any of Agarwal, Airpath Wireless Hot Spot, Bruner, Clark, Connexion by Boeing, Jahn I, Jahn II, Nelson, Maritime Telecommunications Network Cruise Ship Internet Services, Suwanateep, Tenzing Global, Wireless Cabin, and/or Wu could be combined with one or more of each other, for example based on the disclosures shown in Exhibits 469-1 – 469-13. It would have been obvious to combine these references for reasons that are readily apparent to one of ordinary skill in the art, and for reasons explained in additional detail in the sections that follow.

2. The Claims Recite Well-Known Concepts that Would Have Been Obvious to Implement

As noted above and *supra* II.F the asserted claims of the '469 Patent represent nothing more than an arrangement of well-known concepts and features and add nothing to the state of the art at the time of the alleged invention. For each of the concepts represented by the claims, it would have been inherently obvious to add to the teachings of any number of known references and products, including to any of the primary references charted in Exhibits 469-1 – 469-13 to the extent that such reference is alleged to be missing such concept or feature.

3. Additional Reasons to Combine

In addition to the information contained elsewhere in these invalidity contentions, including in Exhibits 469-1 – 469-13, Southwest has identified additional motivations and reasons to combine the various references. Southwest notes that in *KSR Int'l Co. v. Teleflex Inc.*, the Supreme Court held that "[i]n determining whether the subject matter of a patent claim is obvious, neither the particular motivation nor the avowed purpose of the patentee controls. What matters is the objective reach of the claim. If the claim extends to what is obvious, it is invalid under § 103." 550 U.S. 398, 419 (2007).

KSR further illustrated several ways in which the subject matter of a patent claim may be shown to be obvious. For instance, "[o]ne of the ways in which a patent's subject matter can be proved obvious is by noting that there existed at the time of invention a known problem for which there was an obvious solution encompassed by the patent's claims." *KSR*, 127 S.Ct. 1727, 1742. The Supreme Court held that it was error to "look only to the problem the patentee was trying to solve." *Id*. Rather, "[t]he question is not whether the combination was obvious to the patentee but whether the combination was obvious to a person with ordinary skill in the art. Under the correct analysis, any need or problem known in the field of endeavor at the time of invention and addressed by the patent can provide a reason for combining the elements in the manner claimed." *Id*. Further, "[c]ommon sense teaches … that familiar items may have obvious uses beyond their primary purposes, and in many cases a person of ordinary skill will be able to fit the teachings of multiple patents together like pieces of a puzzle." *Id.* Further, a showing that a combination of elements was "obvious to try" may show that it was obvious under § 103. *Id.* For instance, the Supreme Court held that "predictable solutions" using a combination of "known options" may render the subject matter of a patent claim obvious.

When there is a design need or market pressure to solve a problem and there are a finite number of identified, predictable solutions, a person of ordinary skill has good reason to pursue the known options within his or her technical grasp. If this leads to the anticipated success, it is likely the product is not of innovation but of ordinary skill and common sense. *Id.* The ways in which the subject matter of a patent claim may be shown to be obvious, identified by *KSR*, are merely illustrative. The main thrust of *KSR* was that "[r]igid preventative rules that deny factfinders recourse to common sense"—such as the overturned "teaching, suggestion, or motivation" test—are neither necessary under our case law nor consistent with it." *KSR*, 127 S.Ct.

1727, 1742-43; citing with approval, *e.g.*, *DyStar Textilfarben GmbH & Co. Deutschland KG v. C.H. Patrick Co.*, 464 F. 3d 1356, 1367 (2006) ("Our suggestion test is in actuality quite flexible and not only permits, but requires, consideration of common knowledge and common sense"); *Alza Corp. v. Mylan Labs., Inc.*, 464 F. 3d 1286, 1291 (2006) ("There is flexibility in our obviousness jurisprudence because a motivation may be found implicitly in the prior art. We do not have a rigid test that requires an actual teaching to combine...").

Although Southwest notes that there is no longer a rigid requirement regarding motivation to combine under *KSR*, Southwest provides the following statements regarding motivation to combine. Multiple teachings, suggestions, and/or reasons to modify any of the references and/or to combine any two or more of the references charted in Exhibits 469-1 – 469-13 come from many sources, including the prior art (specific and as a whole), common knowledge, common sense, predictability, expectations, industry trends, design incentives or need, market demand or pressure, market forces, obvious to try, the nature of the problem faced, and/or knowledge possessed by one of ordinary skill. In addition, it would have been obvious to try combining the prior art references identified above because there were only a finite number of predictable solutions and/or because known work in one field or endeavor prompted variations based on predictable design incentives and/or market forces either in the same field or a different one.

The combination of prior art references identified in these contentions would have been obvious because the combination represents the known potential options with a reasonable expectation of success. Additionally, one of ordinary skill in the art would have been motivated to create combinations identified in these contentions using: known methods to yield predictable results; known techniques in the same way; a simple substitution of one known, equivalent element for another to obtain predictable results; and/or teaching, suggestion, or motivation in the prior art

generally. Also, market forces in the industry, and the desire to improve features and performance, would motivate the addition of features to products as they become available, become less expensive, become more commonly used, provide better performance, reduce costs, or predictably achieve other clearly desirable results.

Moreover, in addition to the information contained elsewhere in these contentions, and, in particular, charted in Exhibits 469-1 – 469-13, Southwest has identified additional motivations and reasons to combine the various references cited herein. In particular, multiple teachings, suggestions, and/or reasons to modify any of the references and/or to combine any two or more of the references charted in Exhibits 469-1 – 469-13 come from many sources, including the prior art (specific and as a whole), common knowledge, common sense, predictability, expectations, industry trends, design incentives or need, market demand or pressure, market forces, obvious to try, the nature of the problem faced, and/or knowledge possessed by one of ordinary skill. In addition, it would have been obvious to try combining the prior art references identified above because there were only a finite number of predictable solutions and/or because known work in one field or endeavor prompted variations based on predictable design incentives and/or market forces either in the same field or a different one. The combination of prior art references identified in these contentions would have been obvious because the claimed combinations represent the known potential options with a reasonable expectation of success.

To the extent that Plaintiffs contends that any of the above-identified references does not expressly or inherently disclose a particular element or limitation, it would have been obvious to a person of ordinary skill in the art to modify the references or to combine their teachings with other prior art references, including the prior art references in these invalidity contentions, in a manner that renders such claims obvious and invalid.

For example, many of the prior art references charted in Exhibits 469-1 – 469-13 share a goal of providing Internet users with airborne, seaborne, or otherwise remote access to the Internet by way of their own PDAs or laptops. Various references identified in these Preliminary Infringement Contentions disclose, well before the alleged critical date of the '469 patent, installation of paid or otherwise access-limited Internet hotspots in remote locations for users who desire access "[w]hen away from home or office." Wu at [0003]; *id.* at [0004] ("Over recent years, the field of wireless communications has enjoyed tremendous growth.").

For example, Wu discloses "a network system capable of providing prepaid wireless remote access service" which "obtains customer-inputted identification information related to the prepaid account" using an "authentication client." Wu at [0001], [0009], [0033] (noting that "virtually any type of prepaid arrangement or prepayment system may be effected" including, in an alternative embodiment, that funds be "deducted immediately and electronically from a credit card, a debit card, a check card, a charge account, or other forms of remote payment systems." Wu further teaches that subscriber access could be easily handled by "a commercially available device such as the ISS-2000 Internet Subscriber Server manufactured by Handlink Technology, Inc." Wu at [0043].

As another example, Bruner discloses "an airline-based system for providing electronic commerce to passengers during flights" and that "it will be understood by those skilled [sic] the art that the invention is generally applicable to any remote vehicle or building including aircraft, ships, trains and hotels." Bruner at [0001]. According to Bruner, "airborne users 13 are connected to the system via the aircraft based user terminals which are connected to an airline-based remote server computer" by way of an Airborne Data Server (ADS).

As another example, Kalavade teaches the use of commercially-available client access servers "at the hotspot, such as, e.g., a Cisco Router or a Nokia Access controller intercepts the session and sends a pre-defined web page to the user. This typically queries the user for a login and a password . . . Once authenticated, the RADIUS server responds with an Access Response to the RADIUS client." Kalavade at [0056], [0207].

As another example, Jahn I and Jahn II disclose a system for "travellers in aircraft on the move" including "wireless access segments in the aircraft cabin, namely a wireless LAN according to IEEE 802.11b standard," a "satellite segment for interconnection of the cabin with the terrestrial telecom networks," and on-board service integration. Jahn II at 2-3. Jahn explains that, "since IP traffic at IP connection level can be monitored only before the IS stream multiplexing, it is envisaged that AAA functions must be located in the cabin to monitor for instance, volume-based accounting." *Id*. at 8.

As set forth above and *supra* II.F, the market and industry for Internet hotspots was well established and known by one of ordinary skill in the art. A person of ordinary skill would know, for example, to consider any feature of remote Internet hotspot designs already implemented by major industry players, including systems such as Airpath Hot Spot, Connexion by Boeing, or MTN for Cruise Ships. A person of ordinary skill would know that installation of an Internet hotspot could be achieved using "out of the box" hardware and software, and could be then improved upon or customized using any number of known techniques to achieve specific business objectives such as accepting credit cards or offering prepaid or subscription access to a commodity service.

* * *

In addition to the specific combinations of prior art and the specific combinations of groups of prior art disclosed above, Southwest reserves the right to rely on any other combination of any prior art references disclosed herein. Southwest further reserves the right to rely upon combinations of prior art references disclosed within the prosecution history of the references cited herein.

The references charted in Exhibits 469-1 – 469-13 disclose the elements of the asserted claims of the '469 Patent explicitly and/or inherently and may also be relied upon to show the state of the art at the time of the alleged invention. The suggested obviousness combinations are provided in the alternative to Southwest's anticipation contentions and are not to be construed to suggest that any reference included in the combinations is not itself anticipatory.

C. OGP: Charts Setting Forth Where in the Prior Art References Each Element of the Asserted Claims Are Found

Pursuant to the Court's OGP, charts setting forth where specifically in each alleged item of prior art each element of each Asserted Claim of the '469 Patent is found are attached as Exhibits 469-1 – 469-13.

D. Other Relevant Prior Art References

In addition to the references identified above and charted in Exhibits 469-1 – 469-13, each of the references below is relevant to the '469 Patent, as it relates to the state of the art. Southwest reserves the right to amend its contentions to rely on any of the below references alone or in combination with any other references identified in these contentions.

Inventor/Author	Country	Issue/Publication No.	Filed Date
B. Reilly Barry et al.	US	6,615,258	September 24, 1998
Burt Liebowitz et al.	US	5,757,784	January 4, 1996
David D. Otten et al.	US	7,174,127	September 17, 2002
Jeffrey A. Frisco et al.	US	6,208,307	April 7, 2000
Jeyhan Karaoguz et al.	US	6,885,859	December 9, 2002
John Howard et al.	US	2003/0204610	April 30, 2003

Inventor/Author	Country	Issue/Publication No.	Filed Date
John Thomasson et al.	US	2001/0023435	December 20, 2000
Kazuhiro Hara et al.	US	6,560,221	March 6, 1998
Khalid Monir A. El-Rafie et al.	US	6,968,394	March 21, 2000
Michael Massey	US	2001/0026537	February 23, 2001
Nikhil M. Deshpande et al.	US	2002/0176579	May 24, 2001
Patrick Meenan et al.	US	7,283,505	October 31, 2002
Per Wahlberg	US	2004/0137841	April 19, 2002
Robert Davis et al.	US	2002/0154055	April 15, 2002
Selim Rakib	US	2002/0031120	July 3, 2001
Shailendra Depura et al.	US	2003/0084051	July 26, 2002
Yi Gong et al.	US	2005/0032531	August 6, 2003
Conforto et al., "Suited/GMBS System: Architecture and Mobile Terminal"			January 2001
Holzbock et al., "Land-Mobile Demonstration of Multimedia IP Services in Multi-Segment Access Networks," AM. INST. OF AERONAUTICAL. AND ASTRONAUTICS			At least by May 12, 2002
Holzbock et al., "Evolution of Aeronautical Communications for Personal and Multimedia Services" IEEE COMMS. MAGAZINE			July 2003
Jovanovic et al., "Joint Tactical Radio - Aspects of Standardization," SCIENTIFIC-TECHNICAL REVIEW, vol. III, no. 2			At least by July 2003
Martin, "Communication Satellites (1958-1992)," THE AEROSPACE CORPORATION			At least by December 31, 1991

IX. THE '582 PATENT IS INVALID UNDER 35 U.S.C. §§ 102 AND/OR 103

A. The '582 Patent Priority Date

Plaintiff's Infringement Contentions allege the asserted claims of the '582 Patent have a filing date of March 13, 2002.

B. Identification of Prior Art that Anticipates or Renders Obvious the Asserted Claims of the '582 Patent

Southwest contends that the prior art references listed below and charted in Exhibits 582-1 – 582-6 anticipate and/or render obvious, alone or in combination, one or more of the asserted claims of the '582 Patent.

Prior Art Reference	Publication Date
U.S. Patent No. 6,304,866 ("Chow")	Filed – June 27, 1997 Issued – October 16, 2001 This reference is prior art under at least Pre-AIA 35 U.S.C. § 102(e).
U.S. Patent Application Publication No. 2002/0019844 ("Kurowski")	Filed – January 12, 2001 Published – February 14, 2002 This reference is prior art under at least Pre-AIA 35 U.S.C. § 102(e).
U.S. Patent No. 6,330,583 ("Reiffin")	Filed – September 9, 1994 Issued – December 11, 2001 This reference is prior art under at least Pre-AIA 35 U.S.C. § 102(e).
U.S. Patent No. 6,212,617 ("Hardwick")	Filed – June 30, 1998 Issued – April 3, 2001 This reference is prior art under at least Pre-AIA 35 U.S.C. § 102(e).
U.S. Patent Application Publication No. 2002/0103889 ("Markson")	Filed – June 19, 2001 Published – August 1, 2002 This reference is prior art under at least Pre-AIA 35 U.S.C. § 102(e).
U.S. Patent Application Publication No. 2002/0091786 ("Yamaguchi")	Filed – November 1, 2001 Published – July 11, 2002 This reference is prior art under at least Pre-AIA 35 U.S.C. § 102(e).

Prior Art Reference	Publication Date
U.S. Patent No. 5,765,146 ("Wolf")	Filed – November 4, 1993 Issued – June 9, 1998 This reference is prior art under at least Pre-AIA 35 U.S.C. § 102(b) and § 102(e).
EP Patent Application Publication No. EP0377993 ("Lorie")	Published – July 18, 1990 This reference is prior art under at least Pre-AIA 35 U.S.C. § 102(b).
P. Maheshwari, "Improving task scheduling for larger grain execution of parallel functional programs," [1993] Proceedings of the Twenty-sixth Hawaii International Conference on System Sciences, Wailea, HI, USA, 1993, pp. 594-602 vol.2, doi: 10.1109/HICSS.1993.284066. ("Maheshwari")	Published January 8, 1993 This reference is prior art under at least Pre-AIA 35 U.S.C. § 102(b). Retrieved from https://ieeexplore.ieee.org/document/284066
Gamma System - University of Wisconsin-Madison	At least as early as 1990 This reference is prior art under at least Pre-AIA 35 U.S.C. §§ 102(a) or (g).
Volcano Parallel Database System - University of Wisconsin-Madison	At least as early as 1990 This reference is prior art under at least Pre-AIA 35 U.S.C. §§ 102(a) or (g).

Plaintiffs assert claims 1, 2, 5, and 7 of the '582 Patent against Southwest in this lawsuit. These claims are invalid because the '582 Patent fails to meet one or more of the requirements for patentability. The individual bases for invalidity are provided below and in Exhibits 582-1 – 582-6. Each of the prior art references, the underlying work, and/or the underlying apparatus or method qualifies as prior art under one or more sections of Pre-AIA 35 U.S.C. §§ 102 and/or 103.

In an effort to focus the issues, Southwest has cited representative portions of identified references, even where a reference may contain additional disclosures or support for a particular

claim element. Each and every disclosure of the same limitation in the same reference is not necessarily identified. In addition, persons of ordinary skill in the art generally read a prior art reference as a whole and in the context of other publications and literature and in the context of their knowledge as persons of ordinary skill in the art. Thus, to understand and interpret any specific statement or disclosure within a prior art reference, such persons would rely on other information within the reference, along with other publications and their general scientific knowledge and experience in the field. Thus, each prior art reference identified herein should be understood in the context of the reference itself in conjunction with anything incorporated by reference or described as relevant technology by the reference, any documents that are referred to for further understanding by the reference, any product embodying the reference, and any testimony by those with knowledge of the reference, such as the named authors and inventors. Southwest may rely upon uncited portions of the prior art references and on other publications and expert testimony to provide context, and as aids to understanding and interpreting the portions that are cited. Southwest may also rely on uncited portions of the prior art references, other disclosed publications, and the testimony of experts to establish that a person of ordinary skill in the art would have been motivated to modify or combine certain of the cited references so as to render the claims obvious.

Some or all of the asserted claims of the '582 Patent are invalid as anticipated under Pre-AIA 35 U.S.C. § 102 in view of certain ones of the prior art references identified above as detailed in the claim charts included in Exhibits 582-1 – 582-6, which identify specific examples of where each limitation of the asserted claims of the '582 Patent is found in the prior art references. As explained above, the cited portions of prior art references identified in the attached claim charts are exemplary in nature and representative of the content and teaching of the prior art references,

and should be understood in the context of the reference as a whole and as they would be understood by a person of ordinary skill in the art.

To the extent any item of prior art cited above is deemed not to disclose, explicitly or inherently, any limitation of an asserted claim of the '582 Patent, Southwest reserves the right to argue that any difference between that prior art and the corresponding patent claim would have been either inherent in the art or obvious to a person of ordinary skill in the art, even if Southwest has not specifically denoted that the art is to be combined with the knowledge of a person of ordinary skill in the art.

To the extent Plaintiffs argue that any limitation of the asserted claims of the '582 Patent is not explicitly disclosed by an item of prior art identified above and in Exhibits 582-1 – 582-6, any purported differences are such that the claimed subject matter as a whole would have been obvious to one skilled in the art at the time of the alleged invention, in view of the state of the art and knowledge of those skilled in the art. The item of prior art would, therefore, render the relevant claims invalid as obvious under Pre-AIA 35 U.S.C. § 103.

To the extent any of the foregoing references are found not to anticipate the asserted claims of the '582 Patent, the foregoing references render the asserted claims obvious, either alone or in combination with one or more of the other references identified above. One of ordinary skill in the art would have been motivated to combine the various references cited herein so as to disclose each and every limitation of the asserted claims of the '582 Patent.

The prior art identified in Exhibits 582-1 – 582-6 renders one or more asserted claims of the '582 Patent obvious when the references are read alone or in combination with one or more of each other and/or when read in view of the state of the art and knowledge of those skilled in the art.

To the extent that Plaintiff argues that any asserted claim of the '582 Patent is not disclosed or rendered obvious by any reference charted in Exhibits 582-1 – 582-6, the asserted claims nevertheless would have been obvious in light of one or more other references charted in Exhibits 582-1 – 582-6 and in view of the knowledge, experience, and understanding of persons of ordinary skill in the art.

Each and every reference identified is also relevant to the state of the art at the time of the alleged invention. Any of the references disclosed above may be combined with one another to render obvious (and therefore invalid) each of the asserted claims of the '582 Patent. Southwest may rely upon a subset of the above identified references, or all of the references identified above, including all references in charted in Exhibits 582-1 – 582-6, for purposes of obviousness depending on the Court's claim construction, positions taken by Plaintiffs during this litigation, and further investigation and discovery.

1. Example Combinations of the Prior Art

The table below provides an identification of exemplary combinations of prior art references that, based on Southwest's present understanding of Plaintiff's Infringement Contentions and apparent reading of the claims, render obvious one or more of the asserted claims of the '582 Patent. The combinations of references identified below are non-exhaustive, and additional examples are apparent from other combinations of references charted in Exhibits 582-1 – 582-6. Although certain references charted in Exhibits 582-1 – 582-6 are listed variously in the left or right column below, Southwest does not thereby imply any restriction as to which reference is primary and which reference is secondary in such a combination. Southwest reserves the right to rely on either identified reference in the identified combinations as a primary and/or secondary reference.

Exhibit	Reference	Combination Reference(s)
582-1	Chow	Reiffin, Kurowski, Yamaguchi, Wolf, Lorie, and/or Markson, and/or one or more references as charted in Exhibits 582-1 – 582-6
582-2	Reiffin	Chow, Kurowski, Yamaguchi, Wolf, Lorie, and/or Markson, and/or one or more references as charted in Exhibits 582-1 – 582-6
582-3	Hardwick	Reiffin, Kurowski, Yamaguchi, Wolf, Lorie, Chow, and/or Markson, and/or one or more references as charted in Exhibits 582-1 – 582-6
582-4	Maheshwari	Reiffin, Kurowski, Yamaguchi, Wolf, Lorie, Chow, and/or Markson, and/or one or more references as charted in Exhibits 582-1 – 582-6
582-5	Gamma System	Reiffin, Kurowski, Yamaguchi, Wolf, Lorie, Chow, and/or Markson, and/or one or more references as charted in Exhibits 582-1 – 582-6
582-6	Volcano Parallel Database System	Reiffin, Kurowski, Yamaguchi, Wolf, Lorie, Chow, and/or Markson, and/or one or more references as charted in Exhibits 582-1 – 582-6

It will be understood that, given the similarities between the art, any of Chow, Reiffin, Hardwick, Kurowski, Yamaguchi, Wolf, Lorie, Markson, Maheshwari, the Gamma System, and/or the Volcano Parallel Database System could be combined with one or more of each other, for example based on the disclosures shown in Exhibits 582-1 – 582-6. It would have been obvious to combine these references for reasons that are readily apparent to one of ordinary skill in the art, and for reasons explained in additional detail in the sections that follow.

2. The Claims Recite Well-Known Concepts that Would Have Been Obvious to Implement

As noted above, the asserted claims of the '582 Patent represent nothing more than an arrangement of well-known concepts and features and add nothing to the state of the art at the time of the alleged invention. For each of the concepts represented by the claims, it would have been inherently obvious to add to the teachings of any number of known references and products, including to any of the primary references charted in Exhibits 582-1 – 582-6 to the extent that such reference is alleged to be missing such concept or feature.

3. Additional Reasons to Combine

In addition to the information contained elsewhere in these invalidity contentions, including in Exhibits 582-1 – 582-6, Southwest has identified additional motivations and reasons to combine the various references. Southwest notes that in *KSR Int'l Co. v. Teleflex Inc.*, the Supreme Court held that "[i]n determining whether the subject matter of a patent claim is obvious, neither the particular motivation nor the avowed purpose of the patentee controls. What matters is the objective reach of the claim. If the claim extends to what is obvious, it is invalid under § 103." 550 U.S. 398, 127 S.Ct. 1727, 1742 (2007).

KSR further illustrated several ways in which the subject matter of a patent claim may be shown to be obvious. For instance, "[o]ne of the ways in which a patent's subject matter can be proved obvious is by noting that there existed at the time of invention a known problem for which there was an obvious solution encompassed by the patent's claims." *KSR*, 127 S.Ct. 1727, 1742. The Supreme Court held that it was error to "look only to the problem the patentee was trying to solve." *Id*. Rather, "[t]he question is not whether the combination was obvious to the patentee but whether the combination was obvious to a person with ordinary skill in the art. Under the correct analysis, any need or problem known in the field of endeavor at the time of invention and addressed

by the patent can provide a reason for combining the elements in the manner claimed." *Id*. Further, "[c]ommon sense teaches … that familiar items may have obvious uses beyond their primary purposes, and in many cases a person of ordinary skill will be able to fit the teachings of multiple patents together like pieces of a puzzle." *Id.* Further, a showing that a combination of elements was "obvious to try" may show that it was obvious under § 103. *Id.* For instance, the Supreme Court held that "predictable solutions" using a combination of "known options" may render the subject matter of a patent claim obvious.

When there is a design need or market pressure to solve a problem and there are a finite number of identified, predictable solutions, a person of ordinary skill has good reason to pursue the known options within his or her technical grasp. If this leads to the anticipated success, it is likely the product not of innovation but of ordinary skill and common sense. *Id.* The ways in which the subject matter of a patent claim may be shown to be obvious, identified by *KSR*, are merely illustrative. The main thrust of *KSR* was that "[r]igid preventative rules that deny factfinders recourse to common sense"—such as the overturned "teaching, suggestion, or motivation" test—are neither necessary under our case law nor consistent with it." *KSR*, 127 S.Ct. 1727, 1742-43; citing with approval, e.g., *DyStar Textilfarben GmbH & Co. Deutschland KG v. C.H. Patrick Co.*, 464 F. 3d 1356, 1367 (2006) ("Our suggestion test is in actuality quite flexible and not only permits, but requires, consideration of common knowledge and common sense"); *Alza Corp. v. Mylan Labs., Inc.*, 464 F. 3d 1286, 1291 (2006) ("There is flexibility in our obviousness jurisprudence because a motivation may be found implicitly in the prior art. We do not have a rigid test that requires an actual teaching to combine...").

Although Southwest notes that there is no longer a rigid requirement regarding motivation to combine under *KSR*, Southwest provides the following statements regarding motivation to

combine. Multiple teachings, suggestions, and/or reasons to modify any of the references and/or to combine any two or more of the references charted in Exhibits 582-1 – 582-6 come from many sources, including the prior art (specific and as a whole), common knowledge, common sense, predictability, expectations, industry trends, design incentives or need, market demand or pressure, market forces, obvious to try, the nature of the problem faced, and/or knowledge possessed by one of ordinary skill. In addition, it would have been obvious to try combining the prior art references identified above because there were only a finite number of predictable solutions and/or because known work in one field or endeavor prompted variations based on predictable design incentives and/or market forces either in the same field or a different one.

The combination of prior art references identified in these contentions would have been obvious because the combination represents the known potential options with a reasonable expectation of success. Additionally, one of ordinary skill in the art would have been motivated to create combinations identified in these contentions using: known methods to yield predictable results; known techniques in the same way; a simple substitution of one known, equivalent element for another to obtain predictable results; and/or teaching, suggestion, or motivation in the prior art generally. Also, market forces in the industry, and the desire to improve features and performance, would motivate the addition of features to products as they become available, become less expensive, become more commonly used, provide better performance, reduce costs, or predictably achieve other clearly desirable results.

Moreover, in addition to the information contained elsewhere in these contentions, and, in particular, charted in Exhibits 582-1 – 582-6, Southwest has identified additional motivations and reasons to combine the various references cited herein. In particular, multiple teachings, suggestions, and/or reasons to modify any of the references and/or to combine any two or more of

the references charted in Exhibits 582-1 – 582-6 come from many sources, including the prior art (specific and as a whole), common knowledge, common sense, predictability, expectations, industry trends, design incentives or need, market demand or pressure, market forces, obvious to try, the nature of the problem faced, and/or knowledge possessed by one of ordinary skill. In addition, it would have been obvious to try combining the prior art references identified above because there were only a finite number of predictable solutions and/or because known work in one field or endeavor prompted variations based on predictable design incentives and/or market forces either in the same field or a different one. The combination of prior art references identified in these contentions would have been obvious because the claimed combinations represent the known potential options with a reasonable expectation of success.

To the extent that Plaintiffs contend that any of the above-identified references does not expressly or inherently disclose a particular element or limitation, it would have been obvious to a person of ordinary skill in the art to modify the references or to combine their teachings with other prior art references, including the prior art references in these invalidity contentions, in a manner that renders such claims obvious and invalid.

In particular, various references identified above disclose, well before the critical date of the '582 Patent, distributed computing systems that already solved the '582 Patent's goal of decomposing linear computational processes that currently use a single computer into equivalent parallel processes that can use any number of heterogeneous computers.

For example, Chow discloses distributed multi-processing systems and database operations. Chow at 2:42-46. Chow's disclosure provides a multiprocessing system "to perform an aggregate task as quickly as possible, with minimum workload skew among independently operating processing elements." *See* Chow at 2:1-7.

As another example, Reiffin discloses distributed multi-processing systems wherein a large compute-intensive task may be partitioned into subtasks for parallel execution. Reiffin at 1:7-14. Reiffin provides that "a large compute-intensive task may be partitioned into subtasks which are then distributed among a plurality of personal computer or workstations for parallel execution of the subtasks." *See* Reiffin at 1:9-12.

As another example, Kurowski discloses large-scale network-distributed computing systems. Kurowski at [0003]. Kurowski's disclosure provides "[a] distributed computing system achieves a highly distributed environment where very large computation intensive tasks are broken down into thousands of sub-tasks and then distributed to thousands of clients running on a variety of computers across the Internet." *See* Kurowski at Abstract.

As yet another example, Hardwick discloses computer-executable processes following a divide-and-conquer algorithm where the input file is derived from the storage unit and the input is then logically distributed or shared into partitions. The partitions are then distributed to the subtask processors for concurrent processing. *See* Hardwick at Abstract, 10:35-44, claim 1.

As yet another example, Maheshwari discloses a parallel processing system that uses concurrent task partitions, and data is processed in a first-in-first-out (FIFO) manner. *See* Maheshwari at 2-3.

As yet another example, the Gamma System was a parallel relational database system developed at the University of Wisconsin-Madison in the late 1980s. It embodied many concepts that later influenced systems like MapReduce, particularly in how it handled partitioned parallelism for query execution. *See, e.g.*, https://apps.dtic.mil/sti/pdfs/ADA223436.pdf. The Gamma System subdivided data for parallel processing. *See* https://minds.wisconsin.edu/bitstream/handle/1793/11036/file_1.pdf,

https://www.cs.ubc.ca/~rap/teaching/504/2022W2/slides/parallel.pdf, https://minds.wisconsin.edu/bitstream/handle/1793/58708/TR635.pdf?sequence=1.

As yet another example, the Volcano Parallel Database System was a parallel database system designed in the late 1980s and early 1990s at the University of Wisconsin–Madison. It served as a foundation for many later research projects and commercial systems. Volcano is best known not just as a parallel database, but also as an extensible and highly modular query execution engine. Volcano distributes tasks to partitions each with a subtask processor and processes subtasks in parallel. *See* https://paperhub.s3.amazonaws.com/dace52a42c07f7f8348b08dc2b186061.pdf, https://pages.cs.wisc.edu/~shivaram/cs744-readings/volcano.pdf, https://cs-people.bu.edu/mathan/reading-groups/papers-classics/volcano.pdf.

Various references identified above also disclose, well before the critical date of the '582 Patent, file allocation and partitioning, load balancing, using additional processors to carry out file allocation/partitioning and associated distribution, providing an accumulation of output records in an arbitrary order, and input files residing on network attached storage.

For example, Yamaguchi discloses a system in which a program is executed on each of several logical partitions, the load on each of the logical partitions is monitored, and when a logical partition is overloaded, data being distributed by the logical partition is automatically switched for distribution by another logical partition. *See* Yamaguchi at Abstract.

As another example, Wolf discloses using additional processors for performing distributed processing steps. *See* Wolf at 4:63-5:7.

As yet another example, Lorie discloses performing processing in random or arbitrary orders. *See* Lorie at 6:50-56.

As yet another example, Markson discloses a system which logically allocates storage and to the processors and also logically associates logical units from the storage units to those processors, and providing input files on network attached storage. *See* Markson at [0118].

A person of ordinary skill in the art would have been motivated to combine the above references to incorporate the different beneficial technical features provided by each of the above references. Modifying the above references would have only required simple substitution, would not have required extensive experimentation, and would have yielded predictable results.

* * *

In addition to the specific combinations of prior art and the specific combinations of groups of prior art disclosed above, Southwest reserves the right to rely on any other combination of any prior art references disclosed herein. Southwest further reserves the right to rely upon combinations of prior art references disclosed within the prosecution history of the references cited herein.

The references charted in Exhibits 582-1 – 582-6 disclose the elements of the asserted claims of the '582 Patent explicitly and/or inherently and may also be relied upon to show the state of the art at the time of the alleged invention. The suggested obviousness combinations are provided in the alternative to Southwest's anticipation contentions and are not to be construed to suggest that any reference included in the combinations is not itself anticipatory.

C. OGP: Charts Setting Forth Where in the Prior Art References Each Element of the Asserted Claims Are Found

Pursuant to the Court's OGP, charts setting forth where specifically in each alleged item of prior art each element of each Asserted Claim of the '582 Patent is found are attached as Exhibits 582-1 – 582-6.

D. Other Relevant Prior Art References

In addition to the references identified above and charted in Exhibits 582-1 – 582-6, each of the references below is relevant to the '582 Patent, as it relates to the state of the art. Southwest reserves the right to amend its contentions to rely on any of the below references alone or in combination with any other references identified in these contentions.

Inventor/Author	Country	Issue/Publication No.	Filed Date
Tuneo Iida et al.	US	6,334,137	August 24, 1999
Chad Grey Thompson	US	2002/0099716	January 25, 2001
Yuichi Aiba	JP	JP20003/30959	November 30, 2000
Dianne L. Steiger et al.	US	US2002/040381	September 28, 2001
Russ W. Herrell et al.	US	5,325,493	March 30, 1993
Christopher L. Reeve	US	5,535,393	June 5, 1995
Roberta L. Gotfried	US	5,765,166	June 9, 1998
S. Kuo, M. Winslett, Y. Chen, Y. Cho, M. Subramaniam and K. Seamons, "Parallel input/output with heterogeneous disks," Proceedings. Ninth International Conference on Scientific and Statistical Database Management (Cat. No.97TB100150), Olympia, WA, USA, 1997, pp. 79-90, doi: 10.1109/SSDM.1997.621154.			Pub. Aug. 11-13, 1997 Retrieved from https://ieeexplore.ieee.org/document/621154
David Morrison et al.	US	5,945,990	November 19, 1996
Shawn B. Smith et al.	WO	03/012696	July 29, 2002
James Mathew Rehg et al.	US	6,480,876	May 28, 1998
"Some Thoughts on Parallel Processing," Lynn D. Yarbough, Communications of the ACM, Vol. 3, Issue 10, page 539, October 1, 1960 (available at: https://dl.acm.org/doi/10.1145/367415.367426).			Oct. 1, 1960
"A Survey of Some Theoretical Aspects of Multiprocessing," J. L. Baer, ACM Computing			March 1, 1973

Inventor/Author	Country	Issue/Publication No.	Filed Date
Surveys (CSUR), Volume 5, Issue 1 Pages 31 – 80, March 1, 1973 (available at: https://dl.acm.org/doi/10.1145/356612.356615)			
"Parallel Sorting Algorithms for Tightly Coupled Multiprocessors," Michael J. Quinn, Parallel Computing 6 (1988) 349-357.			1988
"Removing Skew Effect in Join Operation on Parallel Processors," Ron-Chung Hu, Richard R. Muntz, Computer Science Technical Report, University of California, Los Angeles, June 1989.			June 1989
"Parallel Architectures for Database Systems," A.R. Hurson, L.L. Miller, S.H. Pakzad, M.H. Eich, B. Shirazi, Advances in Computers, Vol. 28, pages 107-151, 1989.			1989
"Parallel Algorithms for Merging and Sorting," Narsingh Deo, Dilip SarKar, Information Sciences, Vol. 56, pages 151-161, 1991.			1991
"Parallel Algorithms for lcast Median of Squares Regression," Chong-Wei Xu and Wei-Kei Shiue, Computational Statistics & Data Analysis, Vol. 16, pages 349-362, 1993.			1993
"On the Average Running Time of Odd-Even Merge Sort," Christine Rub, Max Plank-Institute Fur Informtik, Research Report, April 1995.			April 1995
"Parallel Algorithms," Guy E. Blelloch and Bruce M. Maggs, a chapter in "The Computer Science and Engineering			1997

Inventor/Author	Country	Issue/Publication No.	Filed Date
Handbook." CRC Press, 1997, ISBN: 0-8493-2909-4. Available at https://dl.acm.org/doi/pdf/10.5555/1882723.1882748.			
"An Approach to Parallelizing Isotonic Regression," Anthony J. Kearsley, Richard A. Tapia, Michael W.Trosset, Applied Mathematics and Parallel Computing, H. Fisher et. al. (eds.), Physica-Verlag Heidelberg (1996), pages 141-147.			1996
"Part 1: The Parallel Computing Environment, Alice E. Koniges, Morris A. Jette, and David C. Eder, in "Industrial Strength Parallel Computing," Morgan Kaufmann, (2000). ISBN 9781558605404. Available at: http://wayback.cecm.sfu.ca/PSG/book/intro.html and at https://books.google.com/books?id=mWalawBciCQC&pg=PA1&source=gbs_toc_r&cad=2#v=onepage&q&f=false.			2000
GPFS: A Parallel File System, Jason Barkes, Marcelo R. Barrios, Francis Cougard, Paul G. Crumley, Didac Marin, Hari Reddy, Theerapong Thitayanun, IBM International Technical Support Organization, April 1998.			April 1998
"Analysis of First-Come-First-Serve Parallel Job Scheduling," Uwe Schwiegelshohn and Ramin Yahyapour. Proceedings of the Annual ACM-SIAM Symposium on Discrete Algorithms (1998). Available at http://dx.doi.org/10.1145/314613.315031.			1998

Inventor/Author	Country	Issue/Publication No.	Filed Date
Bricker, et al., "Condor Technical Summary," University of Wisconsin – Madison Computer Sciences Department			Pub. Jan. 1992
W. Gentzsch, "Sun Grid Engine: Towards Creating a Compute Power Grid," Sun Microsystems, Inc.			2001
O. Sievert, "A Gentle Introduction to Globus," Prepared for Parallel Computation, CSE160/CSE260, Spring 1999			1999
Anderson, et al., "SETI@home Internet Distributed Computing for SETI," ASP Conference Series, Vol. 213			2000
Bamford, et al., "Architecture of Oracle Parallel Server," Proceedings of the 24th Very Large Database (VLDB) Conference New York, USA, 1998			Pub. 1998
J. Howard, "An Overview of the Andrew File System," Carnegie Mellon University			1988
S. Hotovy, "Workload Evolution on the Cornell Theory Center IBM SP2" Cornell Theory Center			1996
Foster et al., "Wide-Area Implementation of the Message Passing Interface," Parallel Computing 24(12),1735-1749			1998
Heymann et al., "Adaptive Scheduling for Master-Worker Applications on the Computational Grid," Department of Computer Sciences University of Wisconsin – Madison			2000
D. Gelernter and N. Carriero, "How to Write Parallel Programs: A Guide to the			Sept. 1989

Inventor/Author	Country	Issue/Publication No.	Filed Date
Perplexed," *ACM Computing Surverys*, Vol. 21, No. 3			

X. THE '080 PATENT IS INVALID UNDER 35 U.S.C. §§ 102 AND/OR 103

A. The '080 Patent Priority Date

Plaintiff's Infringement Contentions allege the asserted claims of the '080 Patent has an effective filing date of May 21, 2003.

B. Identification of Prior Art that Anticipates or Renders Obvious the Asserted Claims of the '080 Patent

Southwest contends that the prior art references listed below and charted in Exhibits 080-1 - 080-6 anticipate and/or render obvious, alone or in combination, one or more of the asserted claims of the '080 Patent.

Prior Art Reference	Publication Date
U.S. Patent No. 6,106,575 ("Hardwick")	Filed – June 30, 1998 Issued – August 22, 2000 This reference is prior art under at least Pre-AIA 35 U.S.C. §§ 102(a), (b), and (e).
I. Foster, "Designing and Building Parallel Programs: Concepts and Tools for Parallel Software Engineering," Addison-Wesley Longman Publishing Co., Inc., 75 Arlington Street, Suite 300 Boston, MA (ISBN: 978-0-201-57594-1) (1995) ("Foster")	At least by 1995 This reference is prior art under at least Pre-AIA 35 U.S.C. § 102(a) and (b). The book is available in an online version at: https://www.mcs.anl.gov/~itf/dbpp/text/book.html, and citations in these invalidity contentions cite to the page numbers of the produced PDF of the online version.
L. Pan et al., "Mobile Agents – The Right Vehicle for Distributed Sequential Computing," Information and Computer Science department of the University of	At least by 2001 This reference is prior art under at least Pre-AIA 35 U.S.C. §§ 102(a) and (b).

Prior Art Reference	Publication Date
California, Irvine, Technical Report No. 01-68 (2001) ("Pan")	
U.S. Patent No. 5,471,622 ("Eadline")	Filed – April 20, 1995 Issued – November 28, 1995 This reference is prior art under at least Pre-AIA 35 U.S.C. §§ 102(a), (b), and (e).
M. Fukuda et al., "Distributed Coordination with MESSENGERS," Science of Computer Programming 31 (1998) 291-311 (1998) ("Fukuda")	At least by 1998 This reference is prior art under at least Pre-AIA 35 U.S.C. §§ 102(a) and (b).
U.S. Patent Application Publication No. 2003/0195938 ("Howard")	Filed – January 10, 2003 Published – October 16, 2003 This reference is prior art under at least Pre-AIA 35 U.S.C. § 102(e).
U.S. Patent Application Publication No. 2002/0199179 ("Lavery")	Filed – June 21, 2001 Published – December 26, 2002 This reference is prior art under at least Pre-AIA 35 U.S.C. §§ 102(a) and (e).
U.S. Patent No. 6,286,027 ("Dwyer")	Filed – November 30, 1998 Issued – September 4, 2001 This reference is prior art under at least Pre-AIA 35 U.S.C. §§ 102(a), (b), and (e).
M. Fukuda et al., "Messages versus messengers in distributed programming," Proceedings of 17th International Conference on Distributed Computing Systems, Baltimore, MD, USA, 1997, pp. 347-354, doi: 10.1109/ICDCS.1997.598068. ("Fukuda2")	At least by 1997 This reference is prior art under at least Pre-AIA 35 U.S.C. §§ 102(a) and (b).

Prior Art Reference	Publication Date
U.S. Patent Application Publication No. 2003/0014471 ("Oshawa")	Filed – April 29, 2002 Published – January 16, 2003 This reference is prior art under at least Pre-AIA 35 U.S.C. §§ 102(a) and (e).
N. Suzuki et al., "Self-migrating threads for multi-agent applications," ICWC 99. IEEE Computer Society International Workshop on Cluster Computing, Melbourne, VIC, Australia, 1999, pp. 221-228, doi: 10.1109/IWCC.1999.810828. ("Suzuki")	At least by 1999 This reference is prior art under at least Pre-AIA 35 U.S.C. §§ 102(a) and (b).

Plaintiffs assert claims 1, 3-6, 9, 17, and 18 of the '080 Patent against Southwest in this lawsuit. These claims are invalid because the '080 Patent fails to meet one or more of the requirements for patentability. The individual bases for invalidity are provided below and in Exhibits 080-1 - 080-6. Each of the prior art references, the underlying work, and/or the underlying apparatus or method qualifies as prior art under one or more sections of Pre-AIA 35 U.S.C. §§ 102 and/or 103.

In an effort to focus the issues, Southwest has cited representative portions of identified references, even where a reference may contain additional disclosures or support for a particular claim element. Each and every disclosure of the same limitation in the same reference is not necessarily identified. In addition, persons of ordinary skill in the art generally read a prior art reference as a whole and in the context of other publications and literature and in the context of their knowledge as persons of ordinary skill in the art. Thus, to understand and interpret any specific statement or disclosure within a prior art reference, such persons would rely on other information within the reference, along with other publications and their general scientific

knowledge and experience in the field. Thus, each prior art reference identified herein should be understood in the context of the reference itself in conjunction with anything incorporated by reference or described as relevant technology by the reference, any documents that are referred to for further understanding by the reference, any product embodying the reference, and any testimony by those with knowledge of the reference, such as the named authors and inventors. Southwest may rely upon uncited portions of the prior art references and on other publications and expert testimony to provide context, and as aids to understanding and interpreting the portions that are cited. Southwest may also rely on uncited portions of the prior art references, other disclosed publications, and the testimony of experts to establish that a person of ordinary skill in the art would have been motivated to modify or combine certain of the cited references so as to render the claims obvious.

Some or all of the asserted claims of the '080 Patent are invalid as anticipated under Pre-AIA 35 U.S.C. § 102 in view of certain ones of the prior art references identified above as detailed in the claim charts included in Exhibits 080-1 - 080-6, which identify specific examples of where each limitation of the asserted claims of the '080 Patent is found in the prior art references. As explained above, the cited portions of prior art references identified in the attached claim charts are exemplary in nature and representative of the content and teaching of the prior art references, and should be understood in the context of the reference as a whole and as they would be understood by a person of ordinary skill in the art.

To the extent any item of prior art cited above is deemed not to disclose, explicitly or inherently, any limitation of an asserted claim of the '080 Patent, Southwest reserves the right to argue that any difference between that prior art and the corresponding patent claim would have been either inherent in the art or obvious to a person of ordinary skill in the art, even if Southwest

has not specifically denoted that the art is to be combined with the knowledge of a person of ordinary skill in the art.

To the extent Plaintiffs argue that any limitation of the asserted claims of the '080 Patent is not explicitly disclosed by an item of prior art identified above and in Exhibits 080-1 - 080-6, any purported differences are such that the claimed subject matter as a whole would have been obvious to one skilled in the art at the time of the alleged invention, in view of the state of the art and knowledge of those skilled in the art. The item of prior art would, therefore, render the relevant claims invalid as obvious under Pre-AIA 35 U.S.C. § 103.

To the extent any of the foregoing references are found not to anticipate the asserted claims of the '080 Patent, the foregoing references render the asserted claims obvious, either alone or in combination with one or more of the other references identified above. One of ordinary skill in the art would have been motivated to combine the various references cited herein so as to disclose each and every limitation of the asserted claims of the '080 Patent.

The prior art identified in Exhibits 080-1 - 080-6 renders one or more asserted claims of the '080 Patent obvious when the references are read alone or in combination with one or more of each other and/or when read in view of the state of the art and knowledge of those skilled in the art.

To the extent that Plaintiff argues that any asserted claim of the '080 Patent is not disclosed or rendered obvious by any reference charted in Exhibits 080-1 - 080-6, the asserted claims nevertheless would have been obvious in light of one or more other references charted in Exhibits 080-1 - 080-6 and in view of the knowledge, experience, and understanding of persons of ordinary skill in the art.

Each and every reference identified is also relevant to the state of the art at the time of the alleged invention. Any of the references disclosed above may be combined with one another to render obvious (and therefore invalid) each of the asserted claims of the '080 Patent. Southwest may rely upon a subset of the above identified references, or all of the references identified above, including all references in charted in Exhibits 080-1 - 080-6, for purposes of obviousness depending on the Court's claim construction, positions taken by Plaintiffs during this litigation, and further investigation and discovery.

1. Example Combinations of the Prior Art

The table below provides an identification of exemplary combinations of prior art references that, based on Southwest's present understanding of Plaintiff's Infringement Contentions and apparent reading of the claims, render obvious one or more of the asserted claims of the '080 Patent. The combinations of references identified below are non-exhaustive, and additional examples are apparent from other combinations of references charted in Exhibits 080-1 - 080-6. Although certain references charted in Exhibits 080-1 - 080-6 are listed variously in the left or right column below, Southwest does not thereby imply any restriction as to which reference is primary and which reference is secondary in such a combination. Southwest reserves the right to rely on either identified reference in the identified combinations as a primary and/or secondary reference.

Exhibit	Reference	Combination Reference(s)
080-1	Hardwick	Eadline, Foster, Lavery, Dwyer, Fukuda2, Oshawa, Suzuki and/or one or more references as charted in Exhibits 080-1 - 080-6
080-2	Foster	Eadline, Hardwick, Lavery, Dwyer, Fukuda2, Oshawa, Suzuki and/or one or

Exhibit	Reference	Combination Reference(s)
		more references as charted in Exhibits 080-1 - 080-6
080-3	Pan	Eadline, Foster, Hardwick, Lavery, Dwyer, Fukuda2, Oshawa, Suzuki and/or one or more references as charted in Exhibits 080-1 - 080-6
080-4	Eadline	Foster, Hardwick, Lavery, Dwyer, Fukuda2, Oshawa, Suzuki and/or one or more references as charted in Exhibits 080-1 - 080-6
080-5	Fukuda	Eadline, Foster, Hardwick, Lavery, Dwyer, Fukuda2, Oshawa, Suzuki and/or one or more references as charted in Exhibits 080-1 - 080-6
080-6	Howard	Eadline, Foster, Hardwick, Lavery, Dwyer, Fukuda2, Oshawa, Suzuki and/or one or more references as charted in Exhibits 080-1 - 080-6

It will be understood that, given the similarities between the art, any of Hardwick, Foster, Pan, Eadline, Fukuda, Howard, Lavery, Dwyer, Fukuda2, Oshawa, and/or Suzuki, could be combined with one or more of each other, for example based on the disclosures shown in Exhibits 080-1 - 080-6. It would have been obvious to combine these references for reasons that are readily apparent to one of ordinary skill in the art, and for reasons explained in additional detail in the sections that follow.

2. The Claims Recite Well-Known Concepts that Would Have Been Obvious to Implement

As noted above, the asserted claims of the '080 Patent represent nothing more than an arrangement of well-known concepts and features and add nothing to the state of the art at the time of the alleged invention. For each of the concepts represented by the claims, it would have been inherently obvious to add to the teachings of any number of known references and products,

including to any of the primary references charted in Exhibits 080-1 - 080-6 to the extent that such reference is alleged to be missing such concept or feature.

3. Additional Reasons to Combine

In addition to the information contained elsewhere in these invalidity contentions, including in Exhibits 080-1 - 080-6, Southwest has identified additional motivations and reasons to combine the various references. Southwest notes that in *KSR Int'l Co. v. Teleflex Inc.*, the Supreme Court held that "[i]n determining whether the subject matter of a patent claim is obvious, neither the particular motivation nor the avowed purpose of the patentee controls. What matters is the objective reach of the claim. If the claim extends to what is obvious, it is invalid under § 103." 550 U.S. 398, 127 S.Ct. 1727, 1742 (2007).

KSR further illustrated several ways in which the subject matter of a patent claim may be shown to be obvious. For instance, "[o]ne of the ways in which a patent's subject matter can be proved obvious is by noting that there existed at the time of invention a known problem for which there was an obvious solution encompassed by the patent's claims." *KSR*, 127 S.Ct. 1727, 1742. The Supreme Court held that it was error to "look only to the problem the patentee was trying to solve." *Id*. Rather, "[t]he question is not whether the combination was obvious to the patentee but whether the combination was obvious to a person with ordinary skill in the art. Under the correct analysis, any need or problem known in the field of endeavor at the time of invention and addressed by the patent can provide a reason for combining the elements in the manner claimed." *Id*. Further, "[c]ommon sense teaches … that familiar items may have obvious uses beyond their primary purposes, and in many cases a person of ordinary skill will be able to fit the teachings of multiple patents together like pieces of a puzzle." *Id.* Further, a showing that a combination of elements was "obvious to try" may show that it was obvious under § 103. *Id.* For instance, the Supreme

Court held that "predictable solutions" using a combination of "known options" may render the subject matter of a patent claim obvious.

When there is a design need or market pressure to solve a problem and there are a finite number of identified, predictable solutions, a person of ordinary skill has good reason to pursue the known options within his or her technical grasp. If this leads to the anticipated success, it is likely the product not of innovation but of ordinary skill and common sense. *Id.* The ways in which the subject matter of a patent claim may be shown to be obvious, identified by *KSR*, are merely illustrative. The main thrust of *KSR* was that "[r]igid preventative rules that deny factfinders recourse to common sense"—such as the overturned "teaching, suggestion, or motivation" test—are neither necessary under our case law nor consistent with it." *KSR*, 127 S.Ct. 1727, 1742-43; citing with approval, e.g., *DyStar Textilfarben GmbH & Co. Deutschland KG v. C.H. Patrick Co.*, 464 F. 3d 1356, 1367 (2006) ("Our suggestion test is in actuality quite flexible and not only permits, but requires, consideration of common knowledge and common sense"); *Alza Corp. v. Mylan Labs., Inc.*, 464 F. 3d 1286, 1291 (2006) ("There is flexibility in our obviousness jurisprudence because a motivation may be found implicitly in the prior art. We do not have a rigid test that requires an actual teaching to combine...").

Although Southwest notes that there is no longer a rigid requirement regarding motivation to combine under *KSR*, Southwest provides the following statements regarding motivation to combine. Multiple teachings, suggestions, and/or reasons to modify any of the references and/or to combine any two or more of the references charted in Exhibits 080-1 - 080-6 come from many sources, including the prior art (specific and as a whole), common knowledge, common sense, predictability, expectations, industry trends, design incentives or need, market demand or pressure, market forces, obvious to try, the nature of the problem faced, and/or knowledge possessed by one

of ordinary skill. In addition, it would have been obvious to try combining the prior art references identified above because there were only a finite number of predictable solutions and/or because known work in one field or endeavor prompted variations based on predictable design incentives and/or market forces either in the same field or a different one.

The combination of prior art references identified in these contentions would have been obvious because the combination represents the known potential options with a reasonable expectation of success. Additionally, one of ordinary skill in the art would have been motivated to create combinations identified in these contentions using: known methods to yield predictable results; known techniques in the same way; a simple substitution of one known, equivalent element for another to obtain predictable results; and/or teaching, suggestion, or motivation in the prior art generally. Also, market forces in the industry, and the desire to improve features and performance, would motivate the addition of features to products as they become available, become less expensive, become more commonly used, provide better performance, reduce costs, or predictably achieve other clearly desirable results.

Moreover, in addition to the information contained elsewhere in these contentions, and, in particular, charted in Exhibits 080-1 - 080-6, Southwest has identified additional motivations and reasons to combine the various references cited herein. In particular, multiple teachings, suggestions, and/or reasons to modify any of the references and/or to combine any two or more of the references charted in Exhibits 080-1 - 080-6 come from many sources, including the prior art (specific and as a whole), common knowledge, common sense, predictability, expectations, industry trends, design incentives or need, market demand or pressure, market forces, obvious to try, the nature of the problem faced, and/or knowledge possessed by one of ordinary skill. In addition, it would have been obvious to try combining the prior art references identified above

because there were only a finite number of predictable solutions and/or because known work in one field or endeavor prompted variations based on predictable design incentives and/or market forces either in the same field or a different one. The combination of prior art references identified in these contentions would have been obvious because the claimed combinations represent the known potential options with a reasonable expectation of success.

To the extent that Plaintiffs contend that any of the above-identified references does not expressly or inherently disclose a particular element or limitation, it would have been obvious to a person of ordinary skill in the art to modify the references or to combine their teachings with other prior art references, including the prior art references in these invalidity contentions, in a manner that renders such claims obvious and invalid.

In particular, various references identified above disclose, well before the critical date of the '080 Patent, developing a distributed parallel computing program. For example, Pan concerns using mobile agents to facilitate distributed sequential computing using a collective memory. *See* Pan, Abstract. Pan's mobile agents use navigational statements to "hop" between nodes to support distributed computing across the nodes. *See* Pan, 2.

As another example, Howard discloses "methods and systems for parallel computation of an algorithm using a plurality of nodes" such that nodes participating in computation requests perform processing of a program in parallel. *See* Howard, Abstract. To transform a distributed sequential computing program into a distributed parallel computing program Howard discloses that processing requests originating with a home node are broadcast to other nodes connected to the home node. *See* Howard, [0017]. These other nodes then can perform parallel processing of the task. *See* Howard, at [0075].

As yet another example, Fukuda discloses a Messengers system where the Messengers interact with one another in both time and space via spatial interactions accomplished via shared node variables defined in every logical node. *See* Fukuda, 12. The Messengers can hop to other nodes in the system to perform parallel processing. *See* Fukuda, 7.

As yet another example, Foster relates to teachings of parallel programming that uses multicomputers that perform parallel processing and read and write to remote memories. *See* Foster, 15, 156-57. Foster also discuss how sequential programming can be converted to parallel composition of computer programs. *See* Foster, 159.

As yet another example, Eadline describes a "system and method for parallel execution of logic programs on a computer network." *See* Eadline, Abstract. When parallel stacks are created, new queries are "spawned" and the parallel stack is solved. *See* Eadline, 7:36-62.

As yet another example, Hardwick discloses a system that converts programs between parallel and sequential programming languages. *See* Hardwick, Abstract. The Hardwick system uses multiple memories that can be distributed but also shared between multiple processors and/or threads. *See* Hardwich, 7:35-51. Hardwick discloses using parallelism to "divide and conquer" computing problems using asynchronous processor teams. *See* Hardwich, 4:55-63.

Various other examples of distributed parallel programming also exist, such as those found in Lavery (*see* Lavery at [0012] (disclosing auxiliary computation using trigger events)), Dwyer (*see* Dwyer at 1:25-35 (disclosing use of concurrent or parallel programming using multithreaded processes)), Fukuda2 (*see* Fukuda2 at 4-5 (disclosing Messenger hopping to perform processing at multiple nodes)), Oshawa (*see* Oshawa at [0096]-[0103] (disclosing creating forking threads to handle parallel processing tasks)), and Suzuki (*see* Suzuki at 2 (disclosing self-migrating threads that navigate a logical network to carry out parallel processing tasks)).

A person of ordinary skill in the art would have been motivated to combine the above references to incorporate the different beneficial technical features provided by each of the above references. Modifying the above references would have only required simple substitution, would not have required extensive experimentation, and would have yielded predictable results.

* * *

In addition to the specific combinations of prior art and the specific combinations of groups of prior art disclosed above, Southwest reserves the right to rely on any other combination of any prior art references disclosed herein. Southwest further reserves the right to rely upon combinations of prior art references disclosed within the prosecution history of the references cited herein.

The references charted in Exhibits 080-1 - 080-6 disclose the elements of the asserted claims of the '080 Patent explicitly and/or inherently and may also be relied upon to show the state of the art at the time of the alleged invention. The suggested obviousness combinations are provided in the alternative to Southwest's anticipation contentions and are not to be construed to suggest that any reference included in the combinations is not itself anticipatory.

C. OGP: Charts Setting Forth Where in the Prior Art References Each Element of the Asserted Claims Are Found

Pursuant to the Court's OGP, charts setting forth where specifically in each alleged item of prior art each element of each Asserted Claim of the '080 Patent is found are attached as Exhibits 080-1 - 080-6.

D. Other Relevant Prior Art References

In addition to the references identified above and charted in Exhibits 080-1 - 080-6, each of the references below is relevant to the '080 Patent, as it relates to the state of the art. Southwest

reserves the right to amend its contentions to rely on any of the below references alone or in combination with any other references identified in these contentions.

Inventor/Author	Country	Issue/Publication No.	Filed Date
JP2001282549A	JP	10/12/2001	3/30/2000
S.C. Goldstein, "Lazy Threads: Implementing a Fast Parallel Call" Journal of Parallel and Distributed Computing 37, 5-20 (1996), Article No. 0104, Retrieved from: https://citeseerx.ist.psu.edu/document?repid=rep1&type=pdf&doi= 8f7d5034bfa394f316ef18569ab94d6565a8e055		At least by August 25, 1996	
G.L. Peterson, "Concurrent Reading While Writing," Department of Computer, University of Rochester, NY, Carlson Library (1980) (Rev. 1981) Retrieved from: https://scispace.com/pdf/concurrent-reading-while-writing-uo5k2lzcaa.pdf		At least by February 1981	
Mascarenhas, Edward and Rego, Vernon, "Ariadne: Architecture of a Portable Threads system supporting Mobile Processes" (1995). Department of Computer Science Technical Reports. Paper 1195. https://docs.lib.purdue.edu/cstech/1195		At least by 1995	
Sang, Janche and Rego, Vernon J., "Efficient Implementation of Thread Migration on Distributed-Memory Multi-processors" (1993). Department of Computer		At least by 1993	

Inventor/Author	Country	Issue/Publication No.	Filed Date
Science Technical Reports. Paper 1078. https://docs.lib.purdue.edu/cstech/1078			
C. Wicke et al, "Automatic State Capture of Self-Migrating Computations in Messengers" (1998). Lecture Notes in Computer Science (LNCS,volume 1477). https://ics.uci.edu/~mbdillen/papers/MA1998.pdf		At least by 1998	
E. Mascarenhas et al, "Ariadne: Architecture of a Portable Threads system supporting Thread Migration" (1998). SOFTWARE—PRACTICE AND EXPERIENCE, VOL. 26(3), 327–356 (3 1996)		At least by 1996	
M. Fukuda et al., "Messengers: Distributed Programming Using Mobile Agents," 2001 Society for Design and Process Science, DECEMBER 2001, Vol. 5, No. 4, pp. 95-112.		At least by December 2001	
M. Fukuda. "Messengers User's Manual," Department of Information and Computer Science, University of California, Irvine (January 21, 1998).		At least by January 21, 1998.	
Mascarenhas, Edward and Rego, Vernon, "Migrant Threads on Process Farms: Parallel Programming with Ariadne*" (1995). Department of Computer Science Technical Reports. Paper 1253. https://docs.lib.purdue.edu/cstech/1253		At least by 1995	

XI. THE '282 PATENT IS INVALID UNDER 35 U.S.C. §§ 102 AND/OR 103

A. The '282 Patent Priority Date

The asserted claims of the '282 Patent have a filing date of March 30, 2006. Application No. 11/395,816 (the "'816 Application"), which matured into the '282 Patent, was filed on March 30, 2006 and was a continuation-in-part of Application No. 11/026,622 (filed December 20, 2004) (abandoned) (the "'622 Application").

However, none of the '282 Patent claims are entitled to the priority date of the '622 Application because the '282 Patent claims subject matter not found in the '622 Application. For example, the '622 Application never mentions "merging the blocks of the root image stored on the first storage unit with the blocks of the leaf image stored on the second storage unit to create the application environment" nor "upon receiving a write request from the compute node for a sector X, creating an appropriate persistent mapping for sector X" – which are expressly required by all claims of the '282 Patent. '282 Patent, 5:1-10, 7:11-8:65. *See Studiengesellschaft Kohle v. Shell Oil Co.*, 112 F.3d 1561, 1564 (Fed. Cir. 1997). Additionally, claims 1-14 of the '282 Patent recite use of a "union block device," which is also not found in the '622 Application. Therefore, the asserted claims of the '282 Patent are only entitled to a filing date of March 30, 2006.

B. Identification of Prior Art that Anticipates or Renders Obvious the Asserted Claims of the '282 Patent

Southwest contends that the prior art references listed below and charted in Exhibits 282-1 – 282-21 anticipate and/or render obvious, alone or in combination, one or more of the asserted claims of the '282 Patent.

Prior Art Reference	Publication Date
"Optimizing the Migration of Virtual Computers," Association for Computing Machinery,	Published December 31, 2002 This reference is prior art under at least Pre-AIA 35 U.S.C. § 102(b).

Prior Art Reference	Publication Date
Special Interest Group on Operating Systems, Operating Systems Review, Proceedings of the 5th Symposium on Operating Systems Design and Implementation, Volume 36, Issue S1 ("Sapuntzakis")	
U.S. Patent No. 7,089,300 ("Birse")	Filed – October 19, 1999 Issued – August 8, 2006 This reference is prior art under at least Pre-AIA 35 U.S.C. § 102(e).
U.S. Patent Application Publication No. 2002/0034105 ("Kulkarni")	Filed – January 8, 2001 Published – March 21, 2002 This reference is prior art under at least Pre-AIA 35 U.S.C. § 102(b) and § 102(e).
U.S. Patent Application Publication No. 2005/0004925 ("Stahl")	Filed – May 7, 2004 Published – January 6, 2005 This reference is prior art under at least Pre-AIA 35 U.S.C. § 102(b) and § 102(e).
U.S. Patent Application Publication No. 2006/0168154 ("Zhang")	Filed – November 19, 2004 Published – July 27, 2006 This reference is prior art under at least Pre-AIA 35 U.S.C. § 102(e).
U.S. Patent No. 8,001,085 ("Kiselev")	Filed – November 25, 2003 Issued – August 16, 2011 This reference is prior art under at least Pre-AIA 35 U.S.C. § 102(e).
U.S. Patent Application Publication No. 2004/0172509 ("Takeda")	Filed – June 23, 2003 Published – September 2, 2004 This reference is prior art under at least Pre-AIA 35 U.S.C. § 102(b) and § 102(e).

Prior Art Reference	Publication Date
U.S. Patent No. 6,671,782 ("Menon")	Filed – March 29, 2000 Issued – December 30, 2003 This reference is prior art under at least Pre-AIA 35 U.S.C. § 102(b) and § 102(e).
U.S. Patent Application Publication No. 2003/0236850 ("Kodama")	Filed – March 21, 2002 Published – December 25, 2003 This reference is prior art under at least Pre-AIA 35 U.S.C. § 102(b) and § 102(e).
PCT Application Publication No. WO 2006/074869 ("Bayer")	Filed – January 4, 2006 Published – July 20, 2006 This reference is prior art under at least Pre-AIA 35 U.S.C. § 102(b) and § 102(e).
Laros, James H. et al., "Implementing Scalable Disk-Less Clusters Using The Network File System (NFS)," ("Laros")	Published at least by January 2003 Retrieved from: https://www.researchgate.net/publication/255223070_Implementing_scalable_disk-less_clusters_using_the_Network_File_System_NFS This reference is prior art under at least Pre-AIA 35 U.S.C. § 102(b).
U.S. Patent Application Publication No. 2004/0153639 ("Cherian")	Filed – February 5, 2003 Published – August 5, 2004 This reference is prior art under at least Pre-AIA 35 U.S.C. §§ 102(b) and (e).
U.S. Patent No. 7,197,608 ("Mikuma")	Filed – July 12, 2004 Issued – March 27, 2007 This reference is prior art under at least Pre-AIA 35 U.S.C. § 102(e).
U.S. Patent Application Publication No. 2005/0283575 ("Kobayashi")	Filed – August 13, 2004 Published – December 22, 2005 This reference is prior art under at least Pre-AIA 35 U.S.C. §§ 102(b) and (e).

Prior Art Reference	Publication Date
U.S. Patent No. 6,453,334 ("Vinson")	Filed – June 16, 1998 Issued – September 17, 2002 This reference is prior art under at least Pre-AIA 35 U.S.C. §§ 102(b) and (e).
U.S. Patent No. 5,930,513 ("Taylor")	Filed – June 6, 1996 Issued – July 27, 1999 This reference is prior art under at least Pre-AIA 35 U.S.C. §§ 102(b) and (e).
U.S. Patent Application Publication No. 2002/0091763 ("Shah")	Filed – May 15, 2001 Published – July 11, 2002 This reference is prior art under at least Pre-AIA 35 U.S.C. §§ 102(b) and (e).
U.S. Patent No. 6,618,736 ("Menage")	Filed – March 9, 2001 Issued – September 9, 2003 This reference is prior art under at least Pre-AIA 35 U.S.C. §§ 102(b) and (e).
U.S. Patent Application Publication No. 2003/0221083 ("Hill")	Filed – May 21, 2002 Published – November 27, 2003 This reference is prior art under at least Pre-AIA 35 U.S.C. §§ 102(b) and (e).
F. Rauch et al., "Partition Repositories for Partition Cloning—OS Independent Software Maintenance in Large Clusters of PCs" Proceedings IEEE International Conference on Cluster Computing. CLUSTER 2000, ISBN: 0-7695-0896-0, Date of Conference: November 28, 2000, Date Added to IEEE Xplore: August 6, 2002, ("Rauch");	Published at least by August 6, 2002 This reference is prior art under at least Pre-AIA 35 U.S.C. § 102(b). Retrieved from: https://ieeexplore.ieee.org/document/889066

Prior Art Reference	Publication Date
U.S. Patent Application Publication No. 2004/0210591 ("Hirschfeld")	Filed – May 13, 2004 Published – October 21, 2004 This reference is prior art under at least Pre-AIA 35 U.S.C. §§ 102(b) and (e).
U.S. Patent Application Publication No. 2004/0088694 ("Ho")	Filed – October 31, 2002 Published – May 6, 2004 This reference is prior art under at least Pre-AIA 35 U.S.C. §§ 102(b) and (e).
Southwest Airlines NetApp System – NetApp/Southwest	At least as early as 2002 This reference is prior art under at least Pre-AIA 35 U.S.C. §§ 102(a) or (g).
VMware Systems - VMware	At least as early as 2001 This reference is prior art under at least Pre-AIA 35 U.S.C. §§ 102(a) or (g).

Plaintiffs assert claims 1, 4, 5, 8–10, 13, 15–17, 20, 21, 24–26, 29 of the '282 Patent against Southwest in this lawsuit. These claims are invalid because the '282 Patent fails to meet one or more of the requirements for patentability. The individual bases for invalidity are provided below and in Exhibits 282-1 – 282-21. Each of the prior art references, the underlying work, and/or the underlying apparatus or method qualifies as prior art under one or more sections of Pre-AIA 35 U.S.C. §§ 102 and/or 103.

In an effort to focus the issues, Southwest has cited representative portions of identified references, even where a reference may contain additional disclosures or support for a particular claim element. Each and every disclosure of the same limitation in the same reference is not necessarily identified. In addition, persons of ordinary skill in the art generally read a prior art reference as a whole and in the context of other publications and literature and in the context of their knowledge as persons of ordinary skill in the art. Thus, to understand and interpret any

specific statement or disclosure within a prior art reference, such persons would rely on other information within the reference, along with other publications and their general scientific knowledge and experience in the field. Thus, each prior art reference identified herein should be understood in the context of the reference itself in conjunction with anything incorporated by reference or described as relevant technology by the reference, any documents that are referred to for further understanding by the reference, any product embodying the reference, and any testimony by those with knowledge of the reference, such as the named authors and inventors. Southwest may rely upon uncited portions of the prior art references and on other publications and expert testimony to provide context, and as aids to understanding and interpreting the portions that are cited. Southwest may also rely on uncited portions of the prior art references, other disclosed publications, and the testimony of experts to establish that a person of ordinary skill in the art would have been motivated to modify or combine certain of the cited references so as to render the claims obvious.

Some or all of the asserted claims of the '282 Patent are invalid as anticipated under Pre-AIA 35 U.S.C. § 102 in view of certain ones of the prior art references identified above as detailed in the claim charts included in Exhibits 282-1 – 282-21, which identify specific examples of where each limitation of the asserted claims of the '282 Patent is found in the prior art references. As explained above, the cited portions of prior art references identified in the attached claim charts are exemplary in nature and representative of the content and teaching of the prior art references, and should be understood in the context of the reference as a whole and as they would be understood by a person of ordinary skill in the art.

To the extent any item of prior art cited above is deemed not to disclose, explicitly or inherently, any limitation of an asserted claim of the '282 Patent, Southwest reserves the right to

argue that any difference between that prior art and the corresponding patent claim would have been either inherent in the art or obvious to a person of ordinary skill in the art, even if Southwest has not specifically denoted that the art is to be combined with the knowledge of a person of ordinary skill in the art.

To the extent Plaintiffs argue that any limitation of the asserted claims of the '282 Patent is not explicitly disclosed by an item of prior art identified above and in Exhibits 282-1 – 282-21, any purported differences are such that the claimed subject matter as a whole would have been obvious to one skilled in the art at the time of the alleged invention, in view of the state of the art and knowledge of those skilled in the art. The item of prior art would, therefore, render the relevant claims invalid as obvious under Pre-AIA 35 U.S.C. § 103.

To the extent any of the foregoing references are found not to anticipate the asserted claims of the '282 Patent, the foregoing references render the asserted claims obvious, either alone or in combination with one or more of the other references identified above. One of ordinary skill in the art would have been motivated to combine the various references cited herein so as to disclose each and every limitation of the asserted claims of the '282 Patent.

The prior art identified in Exhibits 282-1 – 282-21 renders one or more asserted claims of the '282 Patent obvious when the references are read alone or in combination with one or more of each other and/or when read in view of the state of the art and knowledge of those skilled in the art.

To the extent that Plaintiff argues that any asserted claim of the '282 Patent is not disclosed or rendered obvious by any reference charted in Exhibits 282-1 – 282-21, the asserted claims nevertheless would have been obvious in light of one or more other references charted in Exhibits

282-1 – 282-21 and in view of the knowledge, experience, and understanding of persons of ordinary skill in the art.

Each and every reference identified is also relevant to the state of the art at the time of the alleged invention. Any of the references disclosed above may be combined with one another to render obvious (and therefore invalid) each of the asserted claims of the '282 Patent. Southwest may rely upon a subset of the above identified references, or all of the references identified above, including all references in charted in Exhibits 282-1 – 282-21, for purposes of obviousness depending on the Court's claim construction, positions taken by Plaintiffs during this litigation, and further investigation and discovery.

1. Example Combinations of the Prior Art

The table below provides an identification of exemplary combinations of prior art references that, based on Southwest's present understanding of Plaintiff's Infringement Contentions and apparent reading of the claims, render obvious one or more of the asserted claims of the '282 Patent. The combinations of references identified below are non-exhaustive, and additional examples are apparent from other combinations of references charted in Exhibits 282-1 – 282-21. Although certain references charted in Exhibits 282-1 – 282-21 are listed variously in the left or right column below, Southwest does not thereby imply any restriction as to which reference is primary and which reference is secondary in such a combination. Southwest reserves the right to rely on either identified reference in the identified combinations as a primary and/or secondary reference.

Exhibit	Reference	Combination Reference(s)
282-1	Sapuntzakis	Menage, Hill, Kulkarni, Birse, Rauch, Hirschfeld, Ho, and/or one or more references as charted in Exhibits 282-1 – 282-21

Exhibit	Reference	Combination Reference(s)
282-2	Birse	Menage, Hill, Kulkarni, Sapuntzakis, Rauch, Hirschfeld, Ho,, and/or one or more references as charted in Exhibits 282-1 – 282-21
282-3	Kulkarni	Menage, Hill, Sapuntzakis, Birse, Rauch, Hirschfeld, Ho,, and/or one or more references as charted in Exhibits 282-1 – 282-21
282-4	Stahl	Menage, Hill, Kulkarni, Sapuntzakis, Birse, Rauch, Hirschfeld, Ho, and/or one or more references as charted in Exhibits 282-1 – 282-21
282-5	Zhang	Menage, Hill, Kulkarni, Sapuntzakis, Birse, Rauch, Hirschfeld, Ho, and/or Kulkarni, and/or one or more references as charted in Exhibits 282-1 – 282-21
282-6	Kiselev	Menage, Hill, Kulkarni, Sapuntzakis, Birse, Rauch, Hirschfeld, Ho, and/or one or more references as charted in Exhibits 282-1 – 282-21
282-7	Takeda	Menage, Hill, Kulkarni, Sapuntzakis, Birse, Rauch, Hirschfeld, Ho, and/or one or more references as charted in Exhibits 282-1 – 282-21
282-8	Menon	Menage, Hill, Kulkarni, Sapuntzakis, Birse, Rauch, Hirschfeld, Ho, and/or one or more references as charted in Exhibits 282-1 – 282-21
282-9	Kodama	Menage, Hill, Kulkarni, Sapuntzakis, Birse, Rauch, Hirschfeld, Ho, and/or one or more references as charted in Exhibits 282-1 – 282-21
282-10	Laros	Menage, Hill, Kulkarni, Sapuntzakis, Birse, Rauch, Hirschfeld, Ho, and/or one or more references as charted in Exhibits 282-1 – 282-21

Exhibit	Reference	Combination Reference(s)
282-11	Menage	Hill, Kulkarni, Sapuntzakis, Birse, Rauch, Hirschfeld, Ho, and/or one or more references as charted in Exhibits 282-1 – 282-21
282-12	Bayer	Menage, Hill, Kulkarni, Sapuntzakis, Birse, Rauch, Hirschfeld, Ho, and/or one or more references as charted in Exhibits 282-1 – 282-21
282-13	Cherian	Menage, Hill, Kulkarni, Sapuntzakis, Birse, Rauch, Hirschfeld, Ho, and/or one or more references as charted in Exhibits 282-1 – 282-21
282-14	Hill	Menage, Kulkarni, Sapuntzakis, Birse, Rauch, Hirschfeld, Ho, and/or one or more references as charted in Exhibits 282-1 – 282-21
282-15	Mikuma	Menage, Hill, Kulkarni, Sapuntzakis, Birse, Rauch, Hirschfeld, Ho, and/or one or more references as charted in Exhibits 282-1 – 282-21
282-16	Kobayashi	Menage, Hill, Kulkarni, Sapuntzakis, Birse, Rauch, Hirschfeld, Ho, and/or one or more references as charted in Exhibits 282-1 – 282-21
282-17	Vinson	Menage, Hill, Kulkarni, Sapuntzakis, Birse, Rauch, Hirschfeld, Ho, and/or one or more references as charted in Exhibits 282-1 – 282-21
282-18	Taylor	Menage, Hill, Kulkarni, Sapuntzakis, Birse, Rauch, Hirschfeld, Ho, and/or one or more references as charted in Exhibits 282-1 – 282-21
282-19	Shah	Menage, Hill, Kulkarni, Sapuntzakis, Birse, Rauch, Hirschfeld, Ho, and/or one or more references as charted in Exhibits 282-1 – 282-21

Exhibit	Reference	Combination Reference(s)
282-20	Southwest Airlines NetApp System	Menage, Hill, Kulkarni, Sapuntzakis, Birse, Rauch, Hirschfeld, Ho, and/or one or more references as charted in Exhibits 282-1 – 282-21
282-21	VMware Systems	Menage, Hill, Kulkarni, Sapuntzakis, Birse, Rauch, Hirschfeld, Ho, and/or one or more references as charted in Exhibits 282-1 – 282-21

It will be understood that, given the similarities between the art, any of Sapuntzakis, Birse, Kulkarni, Stahl, Zhang, Kiselev, Takeda, Menon, Kodama, Holzmann, Nelson, Cherian, Mikuma, Kobayashi, Vinson, Taylor, Shah, Menage, Hill, Rauch, Hirschfeld, Ho, Laros, Bayer, Southwest Airlines NetApp System, and/or VMware Systems could be combined with one or more of each other, for example based on the disclosures shown in Exhibits 282-1 – 282-21. It would have been obvious to combine these references for reasons that are readily apparent to one of ordinary skill in the art, and for reasons explained in additional detail in the sections that follow.

2. The Claims Recite Well-Known Concepts that Would Have Been Obvious to Implement

As noted above, the asserted claims of the '282 Patent represent nothing more than an arrangement of well-known concepts and features and add nothing to the state of the art at the time of the alleged invention. For each of the concepts represented by the claims, it would have been inherently obvious to add to the teachings of any number of known references and products, including to any of the primary references charted in Exhibits 282-1 – 282-21 to the extent that such reference is alleged to be missing such concept or feature.

3. Additional Reasons to Combine

In addition to the information contained elsewhere in these invalidity contentions, including in Exhibits 282-1 – 282-21, Southwest has identified additional motivations and reasons

to combine the various references. Southwest notes that in *KSR Int'l Co. v. Teleflex Inc.*, the Supreme Court held that "[i]n determining whether the subject matter of a patent claim is obvious, neither the particular motivation nor the avowed purpose of the patentee controls. What matters is the objective reach of the claim. If the claim extends to what is obvious, it is invalid under § 103." 550 U.S. 398, 127 S.Ct. 1727, 1742 (2007).

KSR further illustrated several ways in which the subject matter of a patent claim may be shown to be obvious. For instance, "[o]ne of the ways in which a patent's subject matter can be proved obvious is by noting that there existed at the time of invention a known problem for which there was an obvious solution encompassed by the patent's claims." *KSR*, 127 S.Ct. 1727, 1742. The Supreme Court held that it was error to "look only to the problem the patentee was trying to solve." *Id*. Rather, "[t]he question is not whether the combination was obvious to the patentee but whether the combination was obvious to a person with ordinary skill in the art. Under the correct analysis, any need or problem known in the field of endeavor at the time of invention and addressed by the patent can provide a reason for combining the elements in the manner claimed." *Id*. Further, "[c]ommon sense teaches … that familiar items may have obvious uses beyond their primary purposes, and in many cases a person of ordinary skill will be able to fit the teachings of multiple patents together like pieces of a puzzle." *Id.* Further, a showing that a combination of elements was "obvious to try" may show that it was obvious under § 103. *Id.* For instance, the Supreme Court held that "predictable solutions" using a combination of "known options" may render the subject matter of a patent claim obvious.

When there is a design need or market pressure to solve a problem and there are a finite number of identified, predictable solutions, a person of ordinary skill has good reason to pursue the known options within his or her technical grasp. If this leads to the anticipated success, it is

likely the product not of innovation but of ordinary skill and common sense. *Id.* The ways in which the subject matter of a patent claim may be shown to be obvious, identified by *KSR*, are merely illustrative. The main thrust of *KSR* was that "[r]igid preventative rules that deny factfinders recourse to common sense"—such as the overturned "teaching, suggestion, or motivation" test—are neither necessary under our case law nor consistent with it." *KSR*, 127 S.Ct. 1727, 1742-43; citing with approval, e.g., *DyStar Textilfarben GmbH & Co. Deutschland KG v. C.H. Patrick Co.*, 464 F. 3d 1356, 1367 (2006) ("Our suggestion test is in actuality quite flexible and not only permits, but requires, consideration of common knowledge and common sense"); *Alza Corp. v. Mylan Labs., Inc.*, 464 F. 3d 1286, 1291 (2006) ("There is flexibility in our obviousness jurisprudence because a motivation may be found implicitly in the prior art. We do not have a rigid test that requires an actual teaching to combine...").

Although Southwest notes that there is no longer a rigid requirement regarding motivation to combine under *KSR*, Southwest provides the following statements regarding motivation to combine. Multiple teachings, suggestions, and/or reasons to modify any of the references and/or to combine any two or more of the references charted in Exhibits 282-1 – 282-21 come from many sources, including the prior art (specific and as a whole), common knowledge, common sense, predictability, expectations, industry trends, design incentives or need, market demand or pressure, market forces, obvious to try, the nature of the problem faced, and/or knowledge possessed by one of ordinary skill. In addition, it would have been obvious to try combining the prior art references identified above because there were only a finite number of predictable solutions and/or because known work in one field or endeavor prompted variations based on predictable design incentives and/or market forces either in the same field or a different one.

The combination of prior art references identified in these contentions would have been obvious because the combination represents the known potential options with a reasonable expectation of success. Additionally, one of ordinary skill in the art would have been motivated to create combinations identified in these contentions using: known methods to yield predictable results; known techniques in the same way; a simple substitution of one known, equivalent element for another to obtain predictable results; and/or teaching, suggestion, or motivation in the prior art generally. Also, market forces in the industry, and the desire to improve features and performance, would motivate the addition of features to products as they become available, become less expensive, become more commonly used, provide better performance, reduce costs, or predictably achieve other clearly desirable results.

Moreover, in addition to the information contained elsewhere in these contentions, and, in particular, charted in Exhibits 282-1 – 282-21, Southwest has identified additional motivations and reasons to combine the various references cited herein. In particular, multiple teachings, suggestions, and/or reasons to modify any of the references and/or to combine any two or more of the references charted in Exhibits 282-1 – 282-21 come from many sources, including the prior art (specific and as a whole), common knowledge, common sense, predictability, expectations, industry trends, design incentives or need, market demand or pressure, market forces, obvious to try, the nature of the problem faced, and/or knowledge possessed by one of ordinary skill. In addition, it would have been obvious to try combining the prior art references identified above because there were only a finite number of predictable solutions and/or because known work in one field or endeavor prompted variations based on predictable design incentives and/or market forces either in the same field or a different one. The combination of prior art references identified

in these contentions would have been obvious because the claimed combinations represent the known potential options with a reasonable expectation of success.

To the extent that Plaintiffs contend that any of the above-identified references does not expressly or inherently disclose a particular element or limitation, it would have been obvious to a person of ordinary skill in the art to modify the references or to combine their teachings with other prior art references, including the prior art references in these invalidity contentions, in a manner that renders such claims obvious and invalid.

In particular, various references identified above disclose, well before the critical date of the '282 Patent, systems distributed across plurality of compute nodes that provide for creating cohesive application environments by tracking changes to a common image. For example, Sapuntzakis concerns a system architecture for quickly moving the state of a running computer (including its OS, applications and user files on disk, and all data in memory) – called a "capsule" – across a network to another machine. *See* Sapuntazakis, 2. This is achieved by reducing the amount of data sent over the network through use of, for instance, "copy-on-write" ("COW") disk images that track just the updates to the disk-storage component of capsules. *Id*.

As another example, Birse relates to the provision of a OS in a net-booted environment. *See* Birse, 1:18-21. According to one embodiment, a server in a network computer ("NC") system maintains a copy of the OS that cannot be corrupted by ordinary users of the NC system. Additionally, the NC system may preserve user customizations (e.g., preferences) by maintaining individual, user, storage areas. When an NC client boots from the network and accesses a stored copy of the OS from an NC server, the user's preferences are dynamically merged with the system environment provided to the NC client. *Id.* 2:56-65. Advantageously, because of these features, a user may login to any NC client on the network and have the same user experience. *Id.* 2:65-3:3.

As yet another example, Kulkarni discloses a system comprising a server and a personal digital assistant (PDA). The server is equipped with a processor, memory, and a network interface, enabling communication with remote devices over a network, such as the Internet. The server's memory contains an image. *See* Kulkarni, at [0027]. The image in flash memory serves as the starting point for creating an updated image. A differences file is stored that includes new data sections, data not present in the root image, and references to unchanged sections of the root image. *See* Kulkarni at [0038].

As yet another example, Stahl discloses a read-only repository file system 226 and a shared read-only file system that provides data to multiple computers. It further describes an overlay file system 220, which stores copies of files that have been modified by respective computers. *See* Stahl at [0026]-[0027].

As yet another example, Zhang describes a data module that stores primary data objects on a computer storage medium. It further discloses replication and placement of data objects in a distributed system, where replicas are created that may include only modified or additional data blocks specific to the respective compute nodes. Zhang at [0034], [0038]. Additionally, Zhang describes an index module on compute nodes that builds and tracks indices of data objects and shares this information with other nodes, enabling efficient access and management of data across the distributed system. *See* Zhang at [0008], [0047].

As yet another example, Kiselev discloses a system for maintaining consistent and up-to-date copies of primary data across a primary node and a secondary node. The primary node stores the primary data, while the secondary node holds snapshots that capture changes made to the primary data using overlay objects. These overlay objects store only the modified data blocks,

referencing unchanged blocks from the primary volume. *See* Kiselev at Abstract, 5:26-63; 6:28-63.

As yet another example, Takeda discloses a data processing system comprising a primary storage unit and multiple secondary storage units. The primary storage unit (PVOL 2212) serves as the main data volume, storing data blocks used for updates and journal acquisition. The secondary storage units (SVOL 2214) store journal data and metadata derived from updates made to the primary storage unit. The journal data includes information about updates, such as addresses, timestamps, and content changes. The secondary storage unit (SVOL 2214) does not duplicate unchanged data blocks from the primary storage unit, as journal data represents only changes and additions. *See* Takeda at [0035]-[0038].

As yet another example, Menon discloses a shared disk system where multiple nodes, each equipped with a computer and an adaptor, interface with shared storage devices. The shared storage devices (10a, b, c) act as the primary repository storing data blocks used by compute nodes. Each adaptor includes a write cache (20a, b, c), which temporarily holds updates or modifications made by individual compute nodes. *See* Menon at 3:55-4:61.

As yet another example, Kodama discloses a system where a primary storage unit stores a master copy of data. Kodama explains that replicated volumes store copies of the data from the master volume. The system handles changes to the data, such as modifications and deletions, by writing them to previously unused areas of the storage, with the updated data being replicated to the replicated volumes. *See* Kodama at [0007], [0050]-[0053].

As yet another example, the NetApp system implemented at Southwest Airlines in 2002 exemplifies a robust and efficient method for managing root and leaf image data. The system architecture at Southwest leveraged clustered NetApp filers integrated with Oracle9i RAC to

achieve high availability and seamless data management. The key technologies used in this setup included WAFL (Write Anywhere File Layout), SnapMirror, and SnapRestore. These technologies facilitated the management of root and leaf image data, maintained consistent application environments, and supported rapid recovery after system disruptions.

As yet another example, the VMware Systems, introduced in the early 2000s, enabled multiple virtual machines (compute nodes) to run concurrently on a single physical server. The virtual machines share data through root image files stored on centralized storage units and manage data changes via snapshots and redo logs. The systems efficiently provide data to a plurality of compute nodes through virtualization and dynamic resource allocation. *See* VMware GSX Server 3 Virtual Machine Guide, VMware GSX Server 3 Specifications Datasheet, and VMware ESX Server 2.1 Specifications Datasheet.

A person of ordinary skill in the art would have been motivated to combine the above references to incorporate the different beneficial technical features provided by each of the above references. Modifying the above references would have only required simple substitution, would not have required extensive experimentation, and would have yielded predictable results.

* * *

In addition to the specific combinations of prior art and the specific combinations of groups of prior art disclosed above, Southwest reserves the right to rely on any other combination of any prior art references disclosed herein. Southwest further reserves the right to rely upon combinations of prior art references disclosed within the prosecution history of the references cited herein.

The references charted in Exhibits 282-1 – 282-21 disclose the elements of the asserted claims of the ‘282 Patent explicitly and/or inherently and may also be relied upon to show the state

of the art at the time of the alleged invention. The suggested obviousness combinations are provided in the alternative to Southwest's anticipation contentions and are not to be construed to suggest that any reference included in the combinations is not itself anticipatory.

C. OGP: Charts Setting Forth Where in the Prior Art References Each Element of the Asserted Claims Are Found

Pursuant to the Court's OGP, charts setting forth where specifically in each alleged item of prior art each element of each Asserted Claim of the '282 Patent is found are attached as Exhibits 282-1 – 282-21.

D. Other Relevant Prior Art References

In addition to the references identified above and charted in Exhibits 282-1 – 282-21, each of the references below is relevant to the '282 Patent, as it relates to the state of the art. Southwest reserves the right to amend its contentions to rely on any of the below references alone or in combination with any other references identified in these contentions.

Inventor/Author	Country	Issue/Publication No.	Filed Date
C. K. Haun et al.	US	2004/0153526	8/5/2004
James E. King et al.	US	7,529,807	5/5/2004
Yevgeniy Klimenko et al.	US	5,974,547	3/20/1998
Beng-Hong Lim	US	6,795,966	2/4/2000
Julian S. Taylor	US	5,930,513	6/6/1996
Tung M. Nguyen	US	7,870,106	2/2/2006
Goscinski, et al., "GENESIS: An Efficient, Transparent and Easy to Use Cluster Operating System," *Parallel Computing*, Vol. 28, Issue 4, Pages 557–606		At least as early as April 2002	
I. Souvatzis, "A shared write protected root filesystem for a cluster of network clients," arXiv, Retrieved from: https://www.researchgate.net/publication/1957467_A_Shared_Write-protected_Root_Filesystem_for		At least as early as April 2004	

Inventor/Author	Country	Issue/Publication No.	Filed Date
_a_Group_of_Networked_Clients			
JI YONGPING	CN	CN1549171A	5/15/2003
Ryan Patrick Fong et al.	US	2003/0069951	9/14/2001
James Bernardin	US	2003/0154284	8/14/2003

XII. THE '584 PATENT IS INVALID UNDER 35 U.S.C. §§ 102 AND/OR 103

A. The '584 Patent Priority Date

Application No. 12/894,664 (the '664 Application), which matured into the '584 Patent, was filed on September 30, 2010 as a continuation of Application No. 11/927,921 (the '921 Application) filed October 30, 2007 (now Patent No. 7,822,841).

Plaintiff's Infringement Contentions allege that the asserted claims of the '584 Patent are entitled to a priority date of October 30, 2007, which is the filing date of the '921 Application.

B. Identification of Prior Art that Anticipates or Renders Obvious the Asserted Claims of the '584 Patent

Southwest contends that the prior art references listed below and charted in Exhibits 584-1 – 584-3 render obvious one or more of the asserted claims of the '584 Patent.

Prior Art Reference	Publication Date
U.S. Patent Application Publication No. 2004/0243709A1 ("Kalyanavarathan")	Filed – May 27, 2003 Published – December 2, 2004 This reference is prior art under at least Pre-AIA 35 U.S.C. § 102(b) and § 102(e).
U.S. Patent No. 6,594,786B1 ("Connelly")	Filed – January 31, 2000 Issued – July 15, 2003 This reference is prior art under at least Pre-AIA 35 U.S.C. § 102(b) and § 102(e).
U.S. Patent Application Publication No. 2005/0005006A1 ("Chauffour")	Filed – January 6, 2004 Published – January 6, 2005

Prior Art Reference	Publication Date
	This reference is prior art under at least Pre-AIA 35 U.S.C. § 102(b) and § 102(e).
U.S. Patent Application Publication No. 2005/0097058A1 ("Hunt")	Filed – November 12, 2004 Published – May 5, 2005 This reference is prior art under at least Pre-AIA 35 U.S.C. § 102(b) and § 102(e).
U.S. Patent Application Publication No. 2006/0085668A1 ("Garrett")	Filed – October 15, 2004 Published – April 20, 2006 This reference is prior art under at least Pre-AIA 35 U.S.C. § 102(b) and § 102(e).
U.S. Patent No. 6,393,485B1 ("Chao")	Filed – October 27, 1998 Issued – May 21, 2002 This reference is prior art under at least Pre-AIA 35 U.S.C. § 102(b) and § 102(e).
U.S. Patent No. 6,564,261B1 ("Gudjonsson")	Filed – May 9, 2000 Issued – May 13, 2003 This reference is prior art under at least Pre-AIA 35 U.S.C. § 102(b) and § 102(e).
U.S. Patent Application Publication No. 2006/0041681A1 ("Rumelhart")	Filed – August 15, 2005 Published – February 23, 2006 This reference is prior art under at least Pre-AIA 35 U.S.C. § 102(b) and § 102(e).
U.S. Patent Application Publication No. 2007/0088703A1 ("Kasiolas")	Filed – October 17, 2005 Published – April 19, 2007 This reference is prior art under at least Pre-AIA 35 U.S.C. § 102(b) and § 102(e).

Plaintiffs assert claims 1-13 of the '584 Patent against Southwest in this lawsuit. These claims are invalid because the '584 Patent fails to meet one or more of the requirements for patentability. The individual bases for invalidity are provided below and in Exhibits 584-1 – 584-

3. Each of the prior art references, the underlying work, and/or the underlying apparatus or method qualifies as prior art under one or more sections of Pre-AIA 35 U.S.C. § 103.

In an effort to focus the issues, Southwest has cited representative portions of identified references, even where a reference may contain additional disclosures or support for a particular claim element. Each and every disclosure of the same limitation in the same reference is not necessarily identified. In addition, persons of ordinary skill in the art generally read a prior art reference as a whole and in the context of other publications and literature and in the context of their knowledge as persons of ordinary skill in the art. Thus, to understand and interpret any specific statement or disclosure within a prior art reference, such persons would rely on other information within the reference, along with other publications and their general scientific knowledge and experience in the field. Thus, each prior art reference identified herein should be understood in the context of the reference itself in conjunction with anything incorporated by reference or described as relevant technology by the reference, any documents that are referred to for further understanding by the reference, any product embodying the reference, and any testimony by those with knowledge of the reference, such as the named authors and inventors. Southwest may rely upon uncited portions of the prior art references and on other publications and expert testimony to provide context, and as aids to understanding and interpreting the portions that are cited. Southwest may also rely on uncited portions of the prior art references, other disclosed publications, and the testimony of experts to establish that a person of ordinary skill in the art would have been motivated to modify or combine certain of the cited references so as to render the claims obvious.

Some or all of the asserted claims of the ’584 Patent are invalid as anticipated under Pre-AIA 35 U.S.C. § 102 in view of certain ones of the prior art references identified above as detailed

in the claim charts included in Exhibits 584-1 – 584-3, which identify specific examples of where each limitation of the asserted claims of the ’584 Patent is found in the prior art references. As explained above, the cited portions of prior art references identified in the attached claim charts are exemplary in nature and representative of the content and teaching of the prior art references, and should be understood in the context of the reference as a whole and as they would be understood by a person of ordinary skill in the art.

To the extent any item of prior art cited above is deemed not to disclose, explicitly or inherently, any limitation of an asserted claim of the ’584 Patent, Southwest reserves the right to argue that any difference between that prior art and the corresponding patent claim would have been either inherent in the art or obvious to a person of ordinary skill in the art, even if Southwest has not specifically denoted that the art is to be combined with the knowledge of a person of ordinary skill in the art.

To the extent Plaintiffs argue that any limitation of the asserted claims of the ’584 Patent is not explicitly disclosed by an item of prior art identified above and in Exhibits 584-1 – 584-3, any purported differences are such that the claimed subject matter as a whole would have been obvious to one skilled in the art at the time of the alleged invention, in view of the state of the art and knowledge of those skilled in the art. The item of prior art would, therefore, render the relevant claims invalid as obvious under Pre-AIA 35 U.S.C. § 103.

To the extent any of the foregoing references are found not to anticipate the asserted claims of the ’584 Patent, the foregoing references render the asserted claims obvious, either alone or in combination with one or more of the other references identified above. One of ordinary skill in the art would have been motivated to combine the various references cited herein so as to disclose each and every limitation of the asserted claims of the ’584 Patent.

The prior art identified in Exhibits 584-1 – 584-3 renders one or more asserted claims of the ’584 Patent obvious when the references are read alone or in combination with one or more of each other and/or when read in view of the state of the art and knowledge of those skilled in the art.

To the extent that Plaintiff argues that any asserted claim of the ’584 Patent is not disclosed or rendered obvious by any reference charted in Exhibits 584-1 – 584-3, the asserted claims nevertheless would have been obvious in light of one or more other references charted in Exhibits 584-1 – 584-3 and in view of the knowledge, experience, and understanding of persons of ordinary skill in the art.

Each and every reference identified is also relevant to the state of the art at the time of the alleged invention. Any of the references disclosed above may be combined with one another to render obvious (and therefore invalid) each of the asserted claims of the ’584 Patent. Southwest may rely upon a subset of the above identified references, or all of the references identified above, including all references in charted in Exhibits 584-1 – 584-3, for purposes of obviousness depending on the Court’s claim construction, positions taken by Plaintiffs during this litigation, and further investigation and discovery.

1. Example Combinations of the Prior Art

The table below provides an identification of exemplary combinations of prior art references that, based on Southwest’s present understanding of Plaintiff’s Infringement Contentions and apparent reading of the claims, render obvious one or more of the asserted claims of the ’584 Patent. The combinations of references identified below are non-exhaustive, and additional examples are apparent from other combinations of references charted in Exhibits 584-1 – 584-3. Although certain references charted in Exhibits 584-1 – 584-3 are listed variously in the

left or right column below, Southwest does not thereby imply any restriction as to which reference is primary and which reference is secondary in such a combination. Southwest reserves the right to rely on either identified reference in the identified combinations as a primary and/or secondary reference.

Exhibit	Reference	Combination Reference(s)
584-1	Kalyanavarathan	Connelly, Cahuffour, Hunt, Garrett, Chao, Gudjonsson, Rumelhart, and/or Kasiolas, and/or one or more references as charted in Exhibits 584-1 – 584-3
584-2	Hunt	Kalyanavarathan, Connelly, Cahuffour, Garrett, Chao, Gudjonsson, Rumelhart, and/or Kasiolas, and/or one or more references as charted in Exhibits 584-1 – 584-3
584-2	Garrett	Kalyanavarathan, Connelly, Cahuffour, Hunt, Chao, Gudjonsson, Rumelhart, and/or Kasiolas, and/or one or more references as charted in Exhibits 584-1 – 584-3

It will be understood that, given the similarities between the art, any of Kalyanavarathan, Connelly, Cahuffour, Hunt, Garrett, Chao, Gudjonsson, Rumelhart, and/or Kasiolas could be combined with one or more of each other, for example based on the disclosures shown in Exhibits 584-1 — 584-3. It would have been obvious to combine these references for reasons that are readily apparent to one of ordinary skill in the art, and for reasons explained in additional detail in the sections that follow.

2. The Claims Recite Well-Known Concepts that Would Have Been Obvious to Implement

As noted above, the asserted claims of the ’584 Patent represent nothing more than an arrangement of well-known concepts and features and add nothing to the state of the art at the time

of the alleged invention. For each of the concepts represented by the claims, it would have been inherently obvious to add to the teachings of any number of known references and products, including to any of the primary references charted in Exhibits 584-1 – 584-3 to the extent that such reference is alleged to be missing such concept or feature.

3. Additional Reasons to Combine

In addition to the information contained elsewhere in these invalidity contentions, including in Exhibits 584-1 – 584-3, Southwest has identified additional motivations and reasons to combine the various references. Southwest notes that in *KSR Int'l Co. v. Teleflex Inc.*, the Supreme Court held that "[i]n determining whether the subject matter of a patent claim is obvious, neither the particular motivation nor the avowed purpose of the patentee controls. What matters is the objective reach of the claim. If the claim extends to what is obvious, it is invalid under § 103." 550 U.S. 398, 127 S.Ct. 1727, 1742 (2007).

KSR further illustrated several ways in which the subject matter of a patent claim may be shown to be obvious. For instance, "[o]ne of the ways in which a patent's subject matter can be proved obvious is by noting that there existed at the time of invention a known problem for which there was an obvious solution encompassed by the patent's claims." *KSR*, 127 S.Ct. 1727, 1742. The Supreme Court held that it was error to "look only to the problem the patentee was trying to solve." *Id*. Rather, "[t]he question is not whether the combination was obvious to the patentee but whether the combination was obvious to a person with ordinary skill in the art. Under the correct analysis, any need or problem known in the field of endeavor at the time of invention and addressed by the patent can provide a reason for combining the elements in the manner claimed." *Id*. Further, "[c]ommon sense teaches … that familiar items may have obvious uses beyond their primary purposes, and in many cases a person of ordinary skill will be able to fit the teachings of multiple

patents together like pieces of a puzzle." *Id.* Further, a showing that a combination of elements was "obvious to try" may show that it was obvious under § 103. *Id.* For instance, the Supreme Court held that "predictable solutions" using a combination of "known options" may render the subject matter of a patent claim obvious.

When there is a design need or market pressure to solve a problem and there are a finite number of identified, predictable solutions, a person of ordinary skill has good reason to pursue the known options within his or her technical grasp. If this leads to the anticipated success, it is likely the product not of innovation but of ordinary skill and common sense. *Id.* The ways in which the subject matter of a patent claim may be shown to be obvious, identified by *KSR*, are merely illustrative. The main thrust of *KSR* was that "[r]igid preventative rules that deny factfinders recourse to common sense"—such as the overturned "teaching, suggestion, or motivation" test—are neither necessary under our case law nor consistent with it." *KSR*, 127 S.Ct. 1727, 1742-43; citing with approval, e.g., *DyStar Textilfarben GmbH & Co. Deutschland KG v. C.H. Patrick Co.*, 464 F. 3d 1356, 1367 (2006) ("Our suggestion test is in actuality quite flexible and not only permits, but requires, consideration of common knowledge and common sense"); *Alza Corp. v. Mylan Labs., Inc.*, 464 F. 3d 1286, 1291 (2006) ("There is flexibility in our obviousness jurisprudence because a motivation may be found implicitly in the prior art. We do not have a rigid test that requires an actual teaching to combine...").

Although Southwest notes that there is no longer a rigid requirement regarding motivation to combine under *KSR*, Southwest provides the following statements regarding motivation to combine. Multiple teachings, suggestions, and/or reasons to modify any of the references and/or to combine any two or more of the references charted in Exhibits 584-1 – 584-3 come from many sources, including the prior art (specific and as a whole), common knowledge, common sense,

predictability, expectations, industry trends, design incentives or need, market demand or pressure, market forces, obvious to try, the nature of the problem faced, and/or knowledge possessed by one of ordinary skill. In addition, it would have been obvious to try combining the prior art references identified above because there were only a finite number of predictable solutions and/or because known work in one field or endeavor prompted variations based on predictable design incentives and/or market forces either in the same field or a different one.

The combination of prior art references identified in these contentions would have been obvious because the combination represents the known potential options with a reasonable expectation of success. Additionally, one of ordinary skill in the art would have been motivated to create combinations identified in these contentions using: known methods to yield predictable results; known techniques in the same way; a simple substitution of one known, equivalent element for another to obtain predictable results; and/or teaching, suggestion, or motivation in the prior art generally. Also, market forces in the industry, and the desire to improve features and performance, would motivate the addition of features to products as they become available, become less expensive, become more commonly used, provide better performance, reduce costs, or predictably achieve other clearly desirable results.

Moreover, in addition to the information contained elsewhere in these contentions, and, in particular, charted in Exhibits 584-1 – 584-3, Southwest has identified additional motivations and reasons to combine the various references cited herein. In particular, multiple teachings, suggestions, and/or reasons to modify any of the references and/or to combine any two or more of the references charted in Exhibits 584-1 – 584-3 come from many sources, including the prior art (specific and as a whole), common knowledge, common sense, predictability, expectations, industry trends, design incentives or need, market demand or pressure, market forces, obvious to

try, the nature of the problem faced, and/or knowledge possessed by one of ordinary skill. In addition, it would have been obvious to try combining the prior art references identified above because there were only a finite number of predictable solutions and/or because known work in one field or endeavor prompted variations based on predictable design incentives and/or market forces either in the same field or a different one. The combination of prior art references identified in these contentions would have been obvious because the claimed combinations represent the known potential options with a reasonable expectation of success.

To the extent that Plaintiffs contend that any of the above-identified references does not expressly or inherently disclose a particular element or limitation, it would have been obvious to a person of ordinary skill in the art to modify the references or to combine their teachings with other prior art references, including the prior art references in these invalidity contentions, in a manner that renders such claims obvious and invalid.

Kalyanavarathan, Connelly, Chauffour, Hunt, Garrett, Chao, Gudjonsson, Rumelhart, and Kasiolas are analogous art to the claimed invention because each of them is from the same field of endeavor as the claimed invention, i.e., distributed computing systems using clusters.

Various ones of Kalyanavarathan, Connelly, Chauffour, Hunt, Garrett, Chao, Gudjonsson, Rumelhart, and Kasiolas each disclose similar features distributed computing systems using clusters, such as high performance or monitoring, or describe cluster systems using well-known network components such as private communications networks, gateways/routers, and firewalls. In particular, various references identified above disclose, well before the critical date of the ’584 Patent, high performance systems in which processes are broken into different tasks that are performed in parallel. For example, Connelly describes “nodes [that] have one or more central processing units or microprocessors, … each [of which] can be used by itself to perform a

particular task" identified by a "task ID." See Connelly at 5:20-23, 10:5. Chao discloses cluster systems in which "requests are distributed to all nodes for parallel processing. See Chao at 4:52-53. Gudjonsson teaches that "performance increases as more threads are allocated to doing separate jobs, up to a maximum (system dependent)" and that "larger setups where there is a very large number of users and a greater stability requirement [employ] a cluster of high-performance computers." See Gudjonsson at 19:28-30, 28:25-28.

Various references identified above also disclose, well before the critical date of the '584 Patent, distributed computing systems using clusters with monitoring for purposes of high availability and/or load balancing. For example, Kalyanavarathan describes a load balancing multi-cluster system in which "a monitoring process … monitors the status of all nodes" and provides "an indication that the selected node may be non-functional" or otherwise "unable to service a request." See Kalyanavarathan at ¶ [0041]. Connelly describes "a fault tolerant method of monitoring one or more computers for availability may include generating an event when a computer system detects a change in its status that affects availability" where "[e]ach of the nodes is programmed to monitor itself for cluster, node and package availability and to transmit availability events." See Connelly at 3:24-27, 4:4-6.

Among well-known network components used in cluster systems, private communications networks and/or routers and firewalls used to form them are described, for example, in Connelly, Chauffour, Chao, and Kasiolas. See Connelly at 6:9 ("firewall F"); Chauffour at ¶¶ [0001] and [0018]-[0020] ("a private subnet," "Router," "private Intranet," and "Firewall"); Chao at 1:53 and 2:56 ("Intranets" and "private communications networks"); Kasiolas at ¶ [0030] ("a firewall may be implemented using techniques known to those skilled in the art to prevent unauthorized access to the cluster").

A person of ordinary skill in the art would have been motivated to combine the above references to incorporate the different beneficial technical features provided by each of the above references. Modifying the above references would have only required simple substitution, would not have required extensive experimentation, and would have yielded predictable results.

* * *

In addition to the specific combinations of prior art and the specific combinations of groups of prior art disclosed above, Southwest reserves the right to rely on any other combination of any prior art references disclosed herein. Southwest further reserves the right to rely upon combinations of prior art references disclosed within the prosecution history of the references cited herein.

The references charted in Exhibits 584-1 – 584-3 disclose the elements of the asserted claims of the '584 Patent explicitly and/or inherently and may also be relied upon to show the state of the art at the time of the alleged invention. The suggested obviousness combinations are provided in the alternative to Southwest's anticipation contentions and are not to be construed to suggest that any reference included in the combinations is not itself anticipatory.

C. OGP: Charts Setting Forth Where in the Prior Art References Each Element of the Asserted Claims Are Found

Pursuant to the Court's OGP, charts setting forth where specifically in each alleged item of prior art each element of each Asserted Claim of the '584 Patent is found are attached as Exhibits 584-1 – 584-3.

D. Additional Prior Art

In addition to the references identified above and charted in Exhibits 584-1 – 584-3, each of the references below is relevant to the '584 Patent, as it relates to the state of the art. Southwest

reserves the right to amend its contentions to rely on any of the below references alone or in combination with any other references identified in these contentions.

Inventor/Author	Country	Issue/Publication No.	Filed Date
Friedrich M. Wahl et al.	US	4,731,860	6/13/1986
Laurence Gillick et al.	US	4,837,831	10/15/1986
Yasuo Nakamura	US	5,079,765	1/3/1990
Jeff C. Wu	US	5,185,860	5/3/1990
Joel L. Dinkin et al	US	5,224,205	5/21/1990
Clement R. Attanasio et al	US	5,371,852	10/14/1992
Takeshi Yamazaki	US	5,649,141	6/30/1995
Manu Thapar et al	US	5,694,615	6/26/1995
Sydney G. Chapman et al	US	5,774,650	9/1/1994
Robert Gorczyca et al	US	5,822,531	7/22/1996
Satoshi Zinguuzi	US	5,890,007	2/26/1996
Alexander D. Carr et al	US	5,946,463	7/22/1996
Takehiko Hosokawa et al	US	6,088,727	10/17/1997
Kenneth B. MacKenzie et al	US	6,363,495	1/19/1999
Joh E. Brezak, Jr. et al	US	6,427,209	4/14/2000
Ching-Yun Chao et al	US	6,438,705	1/29/1999
Madhusudhan Talluri et al	US	6,748,429	6/8/2004
Satish Bommareddy et al	US	6,779,039	3/31/2000
Ronald P. Doyle et al	US	6,823,452	12/17/1999
Phillip A. Bernstein et al	US	6,826,568	12/20/2001
Mark A. Kampe et al	US	6,854,069	5/2/2001
Steven G. Skinner et al	US	6,990,602	8/23/2001
Francisco De La Cruz et al	US	6,996,502	1/20/2004
Darpan Dinker et al	US	7,035,858	4/29/2002
Marcos N. Novaes et al	US	7,185,076	5/31/2000
Karamadai Srinivasan et al	US	7,188,171	1/23/2003
Todd M. Goin et al	US	7,203,864	1/25/2004
Daniel E. Ford	US	7,243,368	3/29/2002
Francisco De La Cruz et al	US	7,246,256	1/20/2004
Hans Heckmann et al	US	7,269,762	5/28/2003
Francisco De La Cruz et al	US	7,634,683	4/18/2007
Jeffrey B. Franklin	US	7,822,841	10/30/2007
Amer Hadba et al	US	2004/0197047	4/1/2003
Shai Fultheim et al	US	2005/0039180	4/21/2004
David L. Kaminsky et al	US	2005/0060391	9/16/2003
Peter Rabinovitch	US	2005/0108425	11/17/2003
Ashish A. Pandya	US	2005/0108518	12/2/2004

Inventor/Author	Country	Issue/Publication No.	Filed Date
Francisco De La Cruz et al	US	2005/0159927	1/20/2004
Francisco De La Cruz et al	US	2005/0172161	1/20/2004
Kazumi Kubota	US	2005/0228906	5/17/2005
Shannon V. Davidson	US	2005/0235055	4/15/2004
James D. Ballew et al	US	2005/0251567	4/15/2004
Ryan H,Y, Wong et al	US	2006/0080323	9/29/2005
Steven H. Garrett	US	2006/0085785	10/15/2004
Vladimir Miloushev et al	US	2006/0143350	12/29/2004
Claudia Canali et al	US	2006/0190602	11/30/2005
David B. Jackson	US	2006/0212332	5/16/2006
David B. Jackson	US	2006/0212334	5/16/2006
David B. Jackson	US	2006/0230149	4/7/2006
Ming Chen et al	US	2006/0248371	4/28/2005
John A. Landis et al	US	2007/0028244	10/7/2004
John A. Landis et al	US	2007/0061441	10/7/2004
John A. Landis et al	US	2007/0067435	10/7/2004
Viswa Sharma et al	US	2007/0067481	8/22/2006
Andrew Szabo	US	2007/0156677	2/19/2007
Phillippe Galvez et al	US	2007/0156813	11/14/2006
David B. Jackson	US	2007/0220152	5/22/2007
Francisco De La Cruz et al	US	2007/0245167	4/18/2007
Tomonori Hirai	US	2008/0043769	4/11/2007
David A. Hose	US	2008/0070550	9/18/2007
Michael M Afergan et al	US	2008/0086523	8/17/2007
Michael M Afergan et al	US	2008/0086524	8/17/2007
Michael M Afergan et al	US	2008/0092058	8/19/2007
James C. Lowery et al	US	2008/0120403	11/22/2006
Marcos Vescovi et al	US	2008/0177690	1/19/2007
David B. Jackson	US	2008/0216081	3/11/2005
Yatish C. Mishra et al	US	2009/0019535	6/17/2008 (7/10/2007)
David B. Jackson	US	2010/0023949	10/6/2009 (4/7/2005)
DongWoo Lee et al, "*visPerf*: Monitoring Tool for Grid Computing," Proceedings of the International Conference on Computational Science 2003 (LNCS vol. 2659/2003)			Pub. at least as early as Dec. 31, 2003
G.A. Koenig et al, "Cluster Security with NVisionCC: Process Monitoring by			Pub. at least as early as Dec. 19, 2005

Inventor/Author	Country	Issue/Publication No.	Filed Date
Leveraging Emergent Properties," http://ieeexplore. ieee/org/xpl/freeabs-all,jsp?arnumber=l55853;			
L. Peng et al, "Performance Evaluation in Computational Grid Environments," *Proceedings of the Seventh International Conference on High Performance Computing and Grid in Asia Pacific Region (HPCAsia'04)*			Pub. at least as early as Dec. 31, 2004
P.B. Gibbons et al, "IrisNet: An Architecture for a Worldwide Sensor Web," *IEEE Pervasive Computing*, vol. 2, no. 4, pp. 22-33			Pub. at least as early as Dec. 2003
M.L. Massie et al, "The ganglia distributed monitoring system: design, implementation and experience," *Parallel Computing*, vol. 30, no. 7, pp. 817-840			Pub. at least as early as July 2004

XIII. THE '000 PATENT IS INVALID UNDER 35 U.S.C. §§ 102 AND/OR 103

A. The '000 Patent Priority Date

Plaintiff's Infringement Contentions allege the asserted claims of the '000 Patent has an effective filing date of December 27, 2006.

B. Identification of Prior Art that Anticipates or Renders Obvious the Asserted Claims of the '000 Patent

Southwest contends that the prior art references listed below and charted in Exhibits 000-1 - 000-6 anticipate and/or render obvious, alone or in combination, one or more of the asserted claims of the '000 Patent.

Prior Art Reference	Publication Date
U.S. Patent No. 6,928,062 ("Krishnan")	Filed – January 10, 2003 Issued – August 9, 2005 This reference is prior art under at least Pre-AIA 35 U.S.C. § § 102(a), 102(b), and § 102(e).
U.S. Patent Application Publication No. 2008/0081655 ("Shin")	Filed – September 27, 2007 Published – April 3, 2008 Claims priority to Provisional Application No. 60/827,965, filed October 3, 2006, and Provisional Application No. 60/863,188, filed October 27, 2006. This reference is prior art under at least Pre-AIA 35 U.S.C. § 102(e).
U.S. Patent Application Publication No. 2008/0084853 ("Kuchibhotla")	Filed – October 4, 2006 Published – April 10, 2008 This reference is prior art under at least Pre-AIA 35 U.S.C. § 102(e).
U.S. Patent Application Publication No. 2005/0068931 ("Cho")	Filed – September 30, 2004 Published – March 31, 2005 This reference is prior art under at least Pre-AIA 35 U.S.C. § §102(a), 102(b), and § 102(e).
U.S. Patent Application Publication No. 2006/0171342 ("Dateki")	Filed – April 26, 2005 Published – August 3, 2006 This reference is prior art under at least Pre-AIA 35 U.S.C. § §102(a) and § 102(e).
U.S. Patent Application Publication No. 2006/0286995 ("Onggosanusi")	Filed – June 20, 2006 Published – December 21, 2006 This reference is prior art under at least Pre-AIA 35 U.S.C. § §102(a) and § 102(e).
PCT Application Publication No. WO 2006/0124042 ("Sutivong")	Filed – July 19, 2005 Published – November 23, 2006 This reference is prior art under at least Pre-AIA 35 U.S.C. § 102(a) and § 102(e).
3GPP TS 36.211 V. 0.2.1 – 3rd Generation	Published at least by December 11, 2006

Prior Art Reference	Publication Date
Partnership Project; Technical Specification Group Radio Access Network; Physical Channels and Modulation (Release 8) ("3GPP")	Retrieved from: https://www.3gpp.org/ftp/Specs/archive/36_series/36.211/36211-021.zip This reference is prior art under at least Pre-AIA 35 U.S.C. § 102(a).
U.S. Patent No. 7,817,605 ("Liu")	Filed – August 22, 2003 Issued – October 19, 2010 This reference is prior art under at least Pre-AIA 35 U.S.C. § 102(e).
U.S. Patent Application Publication No. 2003/0026219 ("Moon")	Filed – September 30, 2002 Published – February 6, 2003 This reference is prior art under at least Pre-AIA 35 U.S.C. § § 102(a), § 102(b), and § 102(e).
3GPP TSG RAN WG1 Meeting #45 (R1-061181) ("3GPP TSG")	Published at least by May 2, 2006 Retrieved from: https://www.3gpp.org/ftp/tsg_ran/WG1_RL1/TSGR1_45/Docs/R1-061181.zip This reference is prior art under at least Pre-AIA 35 U.S.C. § 102(a).
U.S. Patent No. 6,272,117 ("Choi")	Filed – February 20, 1998 Issued – August 7, 2001 This reference is prior art under at least Pre-AIA 35 U.S.C. § § 102(a), 102(b), and § 102(e).
U.S. Patent Application Publication No. 2004/0087325 ("Cheng")	Filed – November 4, 2002 Published – May 6, 2004 This reference is prior art under at least Pre-AIA 35 U.S.C. § § 102(a), § 102(b), and § 102(e).

Plaintiffs assert claims 1-6 and 13-18 of the '000 Patent against Southwest in this lawsuit. These claims are invalid because the '000 Patent fails to meet one or more of the requirements for patentability. The individual bases for invalidity are provided below and in Exhibits 000-1 - 000-

6. Each of the prior art references, the underlying work, and/or the underlying apparatus or method qualifies as prior art under one or more sections of Pre-AIA 35 U.S.C. §§ 102 and/or 103.

In an effort to focus the issues, Southwest has cited representative portions of identified references, even where a reference may contain additional disclosures or support for a particular claim element. Each and every disclosure of the same limitation in the same reference is not necessarily identified. In addition, persons of ordinary skill in the art generally read a prior art reference as a whole and in the context of other publications and literature and in the context of their knowledge as persons of ordinary skill in the art. Thus, to understand and interpret any specific statement or disclosure within a prior art reference, such persons would rely on other information within the reference, along with other publications and their general scientific knowledge and experience in the field. Thus, each prior art reference identified herein should be understood in the context of the reference itself in conjunction with anything incorporated by reference or described as relevant technology by the reference, any documents that are referred to for further understanding by the reference, any product embodying the reference, and any testimony by those with knowledge of the reference, such as the named authors and inventors. Southwest may rely upon uncited portions of the prior art references and on other publications and expert testimony to provide context, and as aids to understanding and interpreting the portions that are cited. Southwest may also rely on uncited portions of the prior art references, other disclosed publications, and the testimony of experts to establish that a person of ordinary skill in the art would have been motivated to modify or combine certain of the cited references so as to render the claims obvious.

Some or all of the asserted claims of the ‘000 Patent are invalid as anticipated under Pre-AIA 35 U.S.C. § 102 in view of certain ones of the prior art references identified above as detailed

in the claim charts included in Exhibits 000-1 - 000-6, which identify specific examples of where each limitation of the asserted claims of the '000 Patent is found in the prior art references. As explained above, the cited portions of prior art references identified in the attached claim charts are exemplary in nature and representative of the content and teaching of the prior art references, and should be understood in the context of the reference as a whole and as they would be understood by a person of ordinary skill in the art.

To the extent any item of prior art cited above is deemed not to disclose, explicitly or inherently, any limitation of an asserted claim of the '000 Patent, Southwest reserves the right to argue that any difference between that prior art and the corresponding patent claim would have been either inherent in the art or obvious to a person of ordinary skill in the art, even if Southwest has not specifically denoted that the art is to be combined with the knowledge of a person of ordinary skill in the art.

To the extent Plaintiffs argue that any limitation of the asserted claims of the '000 Patent is not explicitly disclosed by an item of prior art identified above and in Exhibits 000-1 - 000-6, any purported differences are such that the claimed subject matter as a whole would have been obvious to one skilled in the art at the time of the alleged invention, in view of the state of the art and knowledge of those skilled in the art. The item of prior art would, therefore, render the relevant claims invalid as obvious under Pre-AIA 35 U.S.C. § 103.

To the extent any of the foregoing references are found not to anticipate the asserted claims of the '000 Patent, the foregoing references render the asserted claims obvious, either alone or in combination with one or more of the other references identified above. One of ordinary skill in the art would have been motivated to combine the various references cited herein so as to disclose each and every limitation of the asserted claims of the '000 Patent.

The prior art identified in Exhibits 000-1 - 000-6 renders one or more asserted claims of the '000 Patent obvious when the references are read alone or in combination with one or more of each other and/or when read in view of the state of the art and knowledge of those skilled in the art.

To the extent that Plaintiff argues that any asserted claim of the '000 Patent is not disclosed or rendered obvious by any reference charted in Exhibits 000-1 - 000-6, the asserted claims nevertheless would have been obvious in light of one or more other references charted in Exhibits 000-1 - 000-6 and in view of the knowledge, experience, and understanding of persons of ordinary skill in the art.

Each and every reference identified is also relevant to the state of the art at the time of the alleged invention. Any of the references disclosed above may be combined with one another to render obvious (and therefore invalid) each of the asserted claims of the '000 Patent. Southwest may rely upon a subset of the above identified references, or all of the references identified above, including all references in charted in Exhibits 000-1 - 000-6, for purposes of obviousness depending on the Court's claim construction, positions taken by Plaintiffs during this litigation, and further investigation and discovery.

1. Example Combinations of the Prior Art

The table below provides an identification of exemplary combinations of prior art references that, based on Southwest's present understanding of Plaintiff's Infringement Contentions and apparent reading of the claims, render obvious one or more of the asserted claims of the '000 Patent. The combinations of references identified below are non-exhaustive, and additional examples are apparent from other combinations of references charted in Exhibits 000-1 - 000-6. Although certain references charted in Exhibits 000-1 - 000-6 are listed variously in the left or right column below, Southwest does not thereby imply any restriction as to which reference

is primary and which reference is secondary in such a combination. Southwest reserves the right to rely on either identified reference in the identified combinations as a primary and/or secondary reference.

Exhibit	Reference	Combination Reference(s)
000-1	Krishnan	Sutivong, 3GPP, Liu, Shin, Kuchibhotla, Cho, Dateki, Onggosanusi, Moon, 3GPP TSG, Choi, Cheng, and/or one or more references as charted in Exhibits 000-1 - 000-6
000-2	Shin	Sutivong, 3GPP, Liu, Kuchibhotla, Cho, Dateki, Onggosanusi, Krishnan, Moon, 3GPP TSG, Choi, Cheng, and/or one or more references as charted in Exhibits 000-1 - 000-6
000-3	Kuchibhotla	Sutivong, 3GPP, Liu, Shin, Cho, Dateki, Onggosanusi, Krishnan, Moon, 3GPP TSG, Choi, Cheng, and/or one or more references as charted in Exhibits 000-1 - 000-6
000-4	Cho	Sutivong, 3GPP, Liu, Shin, Kuchibhotla, Dateki, Onggosanusi, Krishnan, Moon, 3GPP TSG, Choi, Cheng, and/or one or more references as charted in Exhibits 000-1 - 000-6
000-5	Dateki	Sutivong, 3GPP, Liu, Shin, Kuchibhotla, Cho, Onggosanusi, Krishnan, Moon, 3GPP TSG, Choi, Cheng, and/or one or more references as charted in Exhibits 000-1 - 000-6
000-6	Onggosanusi	Sutivong, 3GPP, Liu, Shin, Kuchibhotla, Cho, Dateki, Krishnan, Moon, 3GPP TSG, Choi, Cheng, and/or one or more references as charted in Exhibits 000-1 - 000-6

It will be understood that, given the similarities between the art, any of Krishnan, Sutivong, 3GPP, Liu, Shin, Kuchibhotla, Cho, Dateki, Onggosanusi, Moon, 3GPP TSG, Choi, and/or Cheng could be combined with one or more of each other, for example based on the disclosures shown in Exhibits 000-1 - 000-6. It would have been obvious to combine these references for reasons that are readily apparent to one of ordinary skill in the art, and for reasons explained in additional detail in the sections that follow.

2. The Claims Recite Well-Known Concepts that Would Have Been Obvious to Implement

As noted above, the asserted claims of the '000 Patent represent nothing more than an arrangement of well-known concepts and features and add nothing to the state of the art at the time of the alleged invention. For each of the concepts represented by the claims, it would have been inherently obvious to add to the teachings of any number of known references and products, including to any of the primary references charted in Exhibits 000-1 - 000-6 to the extent that such reference is alleged to be missing such concept or feature.

3. Additional Reasons to Combine

In addition to the information contained elsewhere in these invalidity contentions, including in Exhibits 000-1 - 000-6, Southwest has identified additional motivations and reasons to combine the various references. Southwest notes that in *KSR Int'l Co. v. Teleflex Inc.*, the Supreme Court held that "[i]n determining whether the subject matter of a patent claim is obvious, neither the particular motivation nor the avowed purpose of the patentee controls. What matters is the objective reach of the claim. If the claim extends to what is obvious, it is invalid under § 103." 550 U.S. 398, 127 S.Ct. 1727, 1742 (2007).

KSR further illustrated several ways in which the subject matter of a patent claim may be shown to be obvious. For instance, "[o]ne of the ways in which a patent's subject matter can be

proved obvious is by noting that there existed at the time of invention a known problem for which there was an obvious solution encompassed by the patent's claims." *KSR*, 127 S.Ct. 1727, 1742. The Supreme Court held that it was error to "look only to the problem the patentee was trying to solve." *Id*. Rather, "[t]he question is not whether the combination was obvious to the patentee but whether the combination was obvious to a person with ordinary skill in the art. Under the correct analysis, any need or problem known in the field of endeavor at the time of invention and addressed by the patent can provide a reason for combining the elements in the manner claimed." *Id*. Further, "[c]ommon sense teaches … that familiar items may have obvious uses beyond their primary purposes, and in many cases a person of ordinary skill will be able to fit the teachings of multiple patents together like pieces of a puzzle." *Id.* Further, a showing that a combination of elements was "obvious to try" may show that it was obvious under § 103. *Id.* For instance, the Supreme Court held that "predictable solutions" using a combination of "known options" may render the subject matter of a patent claim obvious.

When there is a design need or market pressure to solve a problem and there are a finite number of identified, predictable solutions, a person of ordinary skill has good reason to pursue the known options within his or her technical grasp. If this leads to the anticipated success, it is likely the product not of innovation but of ordinary skill and common sense. *Id.* The ways in which the subject matter of a patent claim may be shown to be obvious, identified by *KSR*, are merely illustrative. The main thrust of *KSR* was that "[r]igid preventative rules that deny factfinders recourse to common sense"—such as the overturned "teaching, suggestion, or motivation" test—are neither necessary under our case law nor consistent with it." *KSR*, 127 S.Ct. 1727, 1742-43; citing with approval, e.g., *DyStar Textilfarben GmbH & Co. Deutschland KG v. C.H. Patrick Co.*, 464 F. 3d 1356, 1367 (2006) ("Our suggestion test is in actuality quite flexible and not only

permits, but requires, consideration of common knowledge and common sense"); *Alza Corp. v. Mylan Labs., Inc.*, 464 F. 3d 1286, 1291 (2006) ("There is flexibility in our obviousness jurisprudence because a motivation may be found implicitly in the prior art. We do not have a rigid test that requires an actual teaching to combine...").

Although Southwest notes that there is no longer a rigid requirement regarding motivation to combine under *KSR*, Southwest provides the following statements regarding motivation to combine. Multiple teachings, suggestions, and/or reasons to modify any of the references and/or to combine any two or more of the references charted in Exhibits 000-1 - 000-6 come from many sources, including the prior art (specific and as a whole), common knowledge, common sense, predictability, expectations, industry trends, design incentives or need, market demand or pressure, market forces, obvious to try, the nature of the problem faced, and/or knowledge possessed by one of ordinary skill. In addition, it would have been obvious to try combining the prior art references identified above because there were only a finite number of predictable solutions and/or because known work in one field or endeavor prompted variations based on predictable design incentives and/or market forces either in the same field or a different one.

The combination of prior art references identified in these contentions would have been obvious because the combination represents the known potential options with a reasonable expectation of success. Additionally, one of ordinary skill in the art would have been motivated to create combinations identified in these contentions using: known methods to yield predictable results; known techniques in the same way; a simple substitution of one known, equivalent element for another to obtain predictable results; and/or teaching, suggestion, or motivation in the prior art generally. Also, market forces in the industry, and the desire to improve features and performance, would motivate the addition of features to products as they become available, become less

expensive, become more commonly used, provide better performance, reduce costs, or predictably achieve other clearly desirable results.

Moreover, in addition to the information contained elsewhere in these contentions, and, in particular, charted in Exhibits 000-1 - 000-6, Southwest has identified additional motivations and reasons to combine the various references cited herein. In particular, multiple teachings, suggestions, and/or reasons to modify any of the references and/or to combine any two or more of the references charted in Exhibits 000-1 - 000-6 come from many sources, including the prior art (specific and as a whole), common knowledge, common sense, predictability, expectations, industry trends, design incentives or need, market demand or pressure, market forces, obvious to try, the nature of the problem faced, and/or knowledge possessed by one of ordinary skill. In addition, it would have been obvious to try combining the prior art references identified above because there were only a finite number of predictable solutions and/or because known work in one field or endeavor prompted variations based on predictable design incentives and/or market forces either in the same field or a different one. The combination of prior art references identified in these contentions would have been obvious because the claimed combinations represent the known potential options with a reasonable expectation of success.

To the extent that Plaintiffs contend that any of the above-identified references does not expressly or inherently disclose a particular element or limitation, it would have been obvious to a person of ordinary skill in the art to modify the references or to combine their teachings with other prior art references, including the prior art references in these invalidity contentions, in a manner that renders such claims obvious and invalid.

In particular, various references identified above disclose, well before the critical date of the ‘000 Patent, communications systems in which a user equipment (UE) used shared uplink and

downlink channels to perform resource allocation based on channel conditions. For example, Krishnan relates to a OFDM system in which UEs utilize uplink and downlink channels. *See* Krishnan, Abstract. Krishnan discloses that resources are allocated for transmissions defined in frames that have a time duration or time slot, and channel conditions such as maximum rates supported by the channels. *See* Krishnan, 4:21-57, 9:53-10:20. Krishnan also discloses that communications over the channels can be multiplexed. *Id.*

As another example, Shin discloses using open loop and closed loop uplink transmit power control (TPC) based on channel quality indicators. *See* Shin, Abstract. Shin discloses setting transmit power for various channels used in the communications system. *See* Shin, [0043].

As yet another example, Kuchibhotla discloses a communications system in which UEs communicate base stations using uplink and downlink channels. *See* Kuchibhotla at [0010]. The base stations dynamically allocate resources to the remote units via the channels. *See* Kuchibhotla at [0010], [0012], [0030]-[0033].

As yet another example, Cho discloses transmitting a reference signal in an Orthogonal Frequency Division Multiple Access (OFDMA) communication system in which a total frequency band is divided into a plurality of subcarrier bands and a time division multiplexer performs time division multiplexing such that the reference signal is transmitted for a duration in a predetermined number of subcarrier bands from among the plurality of the subcarrier bands. *See* Cho, Abstract. In Cho, uplink pilot signals are sent in time intervals using a shared channel. *See* Cho, [0040]-[0049].

As yet another example, Dateki relates to a mobile wireless communication system that establishes wireless communication between wireless communication apparatuses such as a mobile station and a base station. *See* Dateki, Abstract. Dateki discloses a transmission power

control process in which a F-DPCH (Fractional Dedicated Physical Channel) is used. The F-DPCH is made up of slots including at least a TPC bit and a pilot signal. Also, a HS-SCCH (Shared Control Physical Channel) (downlink packet control channel), a HS-PDSCH (High Speed Downlink Shared Channel) (downlink traffic channel), an uplink ACK/NACK transmission (the transmission channel corresponding to a HS-DPCCH), and an uplink pilot transmission (the transmission channel corresponding to a DPCH are used to control data transmissions. Dateki at [0069].

As yet another example, Onggosanusi discloses wireless telecommunications system architecture. *See* Onggosanusi at [0014]-[0015]. An uplink control channel, such as an uplink DPCCH (Dedicated Physical Control Channel). The system uses pilot sequences and estimates signal quality parameters, such as SIR (Signal-to-Interference Ratio). The pilot channel is used for several receiver functionalities, such as for example, channel estimation, time and frequency tracking, and so on. Onggosanusi, [0027]-[0034].

Various other examples of communications networks using uplink and downlink channels to perform resource allocation based on channel conditions, such as those found in Sutivong (*see* Sutivong at [0026]-[0027], [0036]-[0040] (disclosing time frequency allocation for subbands for on-demand pilot transmissions and multiplexing)), Liu (*see* Liu at 3:56-65 (disclosing a shared control channel using time slots/durations)), 3GPP (*see* 3GPP at 16 (disclosing a physical uplink control channel and a physical uplink shared channel)), 3GPP TSG (*see* 3GPP TSG at 5-8 (disclosing channels for control signaling and uplink resource management)), Moon (*see* Moon at [0056] (disclosing power control management using a common power control channel)), Choi (*see* Choi at 5:63-6:17(disclosing use of multiple physical channels and guard times providing

predetermined durations for transmissions)), and Cheng (*see* Cheng at [0011] (disclosing using multiple transmission channels and multiplexing)).

A person of ordinary skill in the art would have been motivated to combine the above references to incorporate the different beneficial technical features provided by each of the above references. Modifying the above references would have only required simple substitution, would not have required extensive experimentation, and would have yielded predictable results.

* * *

In addition to the specific combinations of prior art and the specific combinations of groups of prior art disclosed above, Southwest reserves the right to rely on any other combination of any prior art references disclosed herein. Southwest further reserves the right to rely upon combinations of prior art references disclosed within the prosecution history of the references cited herein.

The references charted in Exhibits 000-1 - 000-6 disclose the elements of the asserted claims of the '000 Patent explicitly and/or inherently and may also be relied upon to show the state of the art at the time of the alleged invention. The suggested obviousness combinations are provided in the alternative to Southwest's anticipation contentions and are not to be construed to suggest that any reference included in the combinations is not itself anticipatory.

C. OGP: Charts Setting Forth Where in the Prior Art References Each Element of the Asserted Claims Are Found

Pursuant to the Court's OGP, charts setting forth where specifically in each alleged item of prior art each element of each Asserted Claim of the '000 Patent is found are attached as Exhibits 000-1 - 000-6.

D. Other Relevant Prior Art References

In addition to the references identified above and charted in Exhibits 000-1 - 000-6, each of the references below is relevant to the '000 Patent, as it relates to the state of the art. Southwest reserves the right to amend its contentions to rely on any of the below references alone or in combination with any other references identified in these contentions.

Inventor/Author	Country	Issue/Publication No.	Filed Date
Michad Li	WO	WO 02/49301	6/20/2002
3GPP TSG RAN WG1 Ad Hoc on LTE (R1-051062)			10/14/2005
Takashi Dateki	EP	EP1681780A1	4/27/2005
Takayuki Ishiguro	US	2004/0018850	7/22/2003
Jung-Tao Liu	US	2004/0062192	9/30/2002
"Proposal for Relaying Frame Structure," IEEE 802.16 Broadband Wireless Access Working Group. https://www.ieee802.org/16/			11/13/2006
3GPP TS 25.224 V7.1.0, 3rd Generation Partnership Project; Technical Specification Group Radio Access Network; Physical layer procedures (TDD) (Release 7)			9/2006
IEEE Standard for Local and Metropolitan Area Networks Part 16: Air Interface for Fixed Broadband Wireless Access Systems, IEEE Std 802.16			2001
Eko N. Onggosanusi et al.	US	7,668,564	6/20/2006
Pierre Bertrand et al.	US	7,778,151	10/3/2007
Aris Papasakellariou	US	9,838,980	5/10/2011
Miho Maeda et al.	US	2023/0164789	12/27/2006
Tarik Muharemovie et al.	US	2008/0045260	08/15/2007
Aris Papasakellariou et al.	US	8,417,248	8/14/2007

Inventor/Author	Country	Issue/Publication No.	Filed Date
Frank Frederiksen et al.	US	8,072,929	1/3/2007
Rapeepat Ratasuk et al.	US	8,374,146	12/20/2011
Jae-Hee Cho et al.	US	2006/0040619	8/19/2005

XIV. GROUNDS OF INVALIDITY UNDER 35 U.S.C. § 112

Defendants set forth indefiniteness contentions below, but reserve the right to revise, amend, and/or supplement these indefiniteness contentions as part of the claim construction briefing process as provided for in the Court's scheduling order. The following is provided in a good faith effort to comply with the Court's scheduling order. These contentions shall not be deemed admissions, whether express or implied, regarding the scope of any claims, or the proper constructions of those claims or any terms recited in those claims. Nor do Defendants waive other defenses pursuant to 35 U.S.C. § 112.

A. U.S. Patent No. 8,332,844

Claims 7 and 11 of the 844 Patent (herein, the "Asserted '844 Claims") are invalid under 35 U.S.C. §§ 112(a) and 112(b), respectively, for at least the reasons discussed below.

The Asserted '844 Claims contain subject matter that was not described in the specification in such a way as to reasonably convey to one skilled in the relevant art that the applicants, at the time the application was filed, had possession of the claimed invention. In addition, the Asserted '844 Claims contain subject matter that was not described in the specification in such a way as to enable one of ordinary skill in the art to make and/or use the invention. Further, the Asserted '844 Claims fail to particularly point out and distinctly claim the invention, such that the claim's scope cannot be ascertained with reasonable certainty.

To the extent that the Asserted 844 Claims are construed broadly to cover undisclosed embodiments, the claims are invalid because the '844 Patent specification does not enable a person skilled in the art to practice the full scope of the purported invention, nor does the 844 Patent specification show the applicants had within their possession the full scope of the Asserted '844 Claims. Further, to the extent that any of the Asserted '844 Claims are construed sufficiently broadly to cover one or more of the various accused products identified in IV's infringement contentions, such claims are invalid pursuant to at least 35 U.S.C. § 112(a).

Southwest contends that the following terms of asserted claims 7 and 11 are indefinite under 35 U.S.C. § 112(b), and/or lack written description support under 35 U.S.C. § 112(a):

1. **"only additional data blocks not previously contained in said root image" (Claim 7)**

Indefiniteness: This phrase requires that the leaf image contains "only additional" data blocks that were not previously in the root image. However, the patent does not provide a clear definition of what constitutes an "additional" block versus a modified block. If a block is modified rather than newly created, does it still count as "additional"? The claim does not specify how to determine whether a block was previously contained in the root image. For example: If a block has the same content but is stored in a different location, is it still "previously contained"? If a block is partially altered, does it become "additional," or is it still part of the original root image? Without objective boundaries, a POSA is unable to determine whether a system meets this limitation.

Written Description: The specification describes that leaf images store additional data blocks and modifications to the root image, but does not explicitly define "only additional." The term "only additional" appears to exclude modifications, yet the patent acknowledges that leaf images may store modifications.

2. **“accessed by at least one of said compute nodes” (Claim 7)**

Indefiniteness: This phrase refers to caching blocks that have been “accessed” by at least one compute node, but the term “accessed” is undefined and ambiguous. What type of access qualifies? Read operations only? Write operations? Execution of code within a block? Any attempted access, even if the operation is unsuccessful? The claim does not clarify whether a single access event is sufficient to trigger caching, or if caching occurs only after repeated access.

3. **“merging the blocks of said root image with the blocks of respective leaf images” (Claim 11)**

Indefiniteness: The claim does not specify what “merging” means in this context. Overwriting blocks in the root image with leaf image data? Appending new blocks without modifying existing ones? Interleaving blocks from the root and leaf images?

4. **“to create cohesive respective application environments” (Claim 11)**

Indefiniteness: What makes an application environment “cohesive”? Data consistency across all compute nodes? Performance efficiency? Uniform file structure? Without an objective test for determining whether an environment is “cohesive”, a POSITA cannot reasonably ascertain the scope of this claim term.

Written Description: The specification never explains what a “cohesive” environment entails.

5. "at an operational level between file systems" (Claim 11)

Indefiniteness: What is meant by "operational level"? Kernel-level operations? Middleware interactions? File system APIs? Without a defined meaning, the phrase is open to multiple interpretations, making the claim scope uncertain.

Written Description: The specification never uses the phrase "operational level," and in the context of the claim, the phrase lacks written description support.

B. U.S. Patent No. 8,407,722

Claims 14, 16, 17 and 18 of the '722 Patent (herein, the "Asserted '722 Claims") are invalid under 35 U.S.C. §§ 112(a) and 112(b), respectively, for at least the reasons discussed below.

The Asserted '722 Claims contain subject matter that was not described in the specification in such a way as to reasonably convey to one skilled in the relevant art that the applicants, at the time the application was filed, had possession of the claimed invention. In addition, the Asserted '722 Claims contain subject matter that was not described in the specification in such a way as to enable one of ordinary skill in the art to make and/or use the invention. Further, the Asserted '722 Claims fail to particularly point out and distinctly claim the invention, such that the claim's scope cannot be ascertained with reasonable certainty.

To the extent that the Asserted '722 Claims are construed broadly to cover undisclosed embodiments the claims are invalid because the '722 Patent specification does not enable a person skilled in the art to practice the full scope of the purported invention, nor does the '722 Patent specification show the applicants had within their possession the full scope of the Asserted '722 Claims. Further, to the extent that any of the Asserted '722 Claims are construed sufficiently broadly to cover one or more of the various accused products identified in IV's infringement contentions, such claims are invalid pursuant to at least 35 U.S.C. § 112(a).

Southwest contends that the following terms of asserted claims 14, 16, 17, and 18 are indefinite under 35 U.S.C. § 112(b), and/or lack written description support under 35 U.S.C. § 112(a):

1. **"live object recognizable by the client device" (Claim 14)**

Indefiniteness: The term "live object" is not explicitly defined in the specification. It is unclear whether "live" refers to real-time data streaming, frequent updates, or simply any data object that can be modified. It is also unclear how the system determines if an object is "live." Is it based on update frequency, metadata, or another criterion? Additionally, the phrase "recognizable by the client device" is subjective and lacks objective boundaries. Does "recognizable" require predefined software compatibility? Does it mean the client must be capable of identifying the object's format, or merely receive and process it in some capacity? Without clear technical definitions, a POSA cannot ascertain the exact scope of this term, making the claim indefinite.

Written Description: The specification discusses update messages and object registration, but does not clearly define "live object." If "live object" is meant to be dynamic content, there should be clear criteria for distinguishing it from static content.

2. **"gateway device ... configured to identify a category of the update message" (Claim 14)**

Indefiniteness: The claim requires the gateway device to "identify a category" of an update message, but the patent does not define what "category" means. Are categories predefined or dynamically generated? Is "category" based on data type, source, priority, or some other factor? Without an objective standard for categorization, a POSITA cannot determine whether a system meets this limitation.

3. "determine a node type to which the identified category maps" (Claim 14)

Indefiniteness: "Node type" is vague and undefined. Mapping a category to a node type suggests a predefined relationship, but there is no indication of how these relationships defined, stored, or modified.

Written Description: The patent describes a hierarchy of nodes, but it does not specify how categories and node types are mapped.

4. "cohesive respective application environments" (Claim 14)

Indefiniteness: The phrase "cohesive respective application environments" is subjective. What makes an application environment "cohesive"? Does "cohesive" require synchronized updates, consistent data availability, or a particular processing order?

Written Description: The specification never explicitly defines what a "cohesive" application environment is.

C. U.S. Patent No. 7,949,785

Claims 30, 35, and 37 of the '785 Patent (herein, the "Asserted '785 Claims") are invalid under 35 U.S.C. §§ 112(a) and 112(b), respectively, for at least the reasons discussed below.

The Asserted '785 Claims contain subject matter that was not described in the specification in such a way as to reasonably convey to one skilled in the relevant art that the applicants, at the time the application was filed, had possession of the claimed invention. In addition, the Asserted '785 Claims contain subject matter that was not described in the specification in such a way as to enable one of ordinary skill in the art to make and/or use the invention. Further, the Asserted '785 Claims fail to particularly point out and distinctly claim the invention, such that the claim's scope cannot be ascertained with reasonable certainty.

To the extent that the Asserted '785 Claims are construed broadly to cover undisclosed embodiments, the claims are invalid because the '785 Patent specification does not enable a person

skilled in the art to practice the full scope of the purported invention, nor does the '785 Patent specification show the applicants had within their possession the full scope of the Asserted '785 Claims. Further, to the extent that any of the Asserted '785 Claims are construed sufficiently broadly to cover one or more of the various accused products identified in IV's infringement contentions, such claims are invalid pursuant to at least 35 U.S.C. § 112(a).

Southwest contends that the following terms of asserted claims 30, 35, and 37 are indefinite under 35 U.S.C. § 112(b), and/or lack written description support under 35 U.S.C. § 112(a):

1. **"virtual network manager" (Claim 30)**

Indefiniteness: The term "virtual network manager" is not explicitly defined in the specification. Is it a physical device, a software system, or a combination of both? Is it a single entity or a collection of distributed components? How does it differ from existing network management systems?

Written Description: The specification discusses virtual networks and device registration, but does not clearly define or describe a "virtual network manager" as a distinct entity.

2. **"receive a registration request from an agent associated with a device" (Claim 30)**

Indefiniteness: The term "agent associated with a device" lacks clarity. What qualifies as an agent? How is association with the device determined?

3. **"DNS server for the virtual network ... return a network address associated with a network route director" (Claim 30)**

Indefiniteness: The phrase "network route director" is not well-defined. Is this a specific device, a logical function, or a dynamic routing protocol? How does it interact with standard routing mechanisms? The claim requires the DNS server to return multiple addresses, including **a** "network address" for the route director, a "private network address" for a second device, and a

"virtual network address" for the second device. However, the patent does not specify these addresses are assigned, whether these addresses are static or dynamic, or how conflicts are resolved if multiple addresses exist.

Written Description: The specification does not adequately describe how a DNS server can return multiple types of addresses in a single response.

4. **"maintain data to associate a virtual network address with a device in the virtual network" (Claim 37)**

Indefiniteness: The term "maintain data" is ambiguous. What kind of data structure is used? Is this a persistent database, a temporary cache, or another storage method? Does this refer to active session tracking or long-term registration?

D. U.S. Patent No. 8,027,326

Claims 1, 4, and 18 of the '326 Patent (herein, the "Asserted '326 Claims") are invalid under 35 U.S.C. §§ 112(a) and 112(b), respectively, for at least the reasons discussed below.

The Asserted '326 Claims contain subject matter that was not described in the specification in such a way as to reasonably convey to one skilled in the relevant art that the applicants, at the time the application was filed, had possession of the claimed invention. In addition, the Asserted '326 Claims contain subject matter that was not described in the specification in such a way as to enable one of ordinary skill in the art to make and/or use the invention under 35 U.S.C. § 112(a). Further, the Asserted '326 Claims fail to particularly point out and distinctly claim the invention, such that the claim's scope cannot be ascertained with reasonable certainty under 35 U.S.C. § 112(b).

To the extent that the Asserted '326 Claims are construed broadly to cover undisclosed embodiments the claims are invalid because the '326 Patent specification does not enable a person skilled in the art to practice the full scope of the purported invention, nor does the '326 Patent

specification show the applicants had within their possession the full scope of the Asserted '326 Claims. Further, to the extent that any of the Asserted '326 Claims are construed sufficiently broadly to cover one or more of the various accused products identified in IV's infringement contentions, such claims are invalid pursuant to at least 35 U.S.C. § 112(a).

Southwest contends that the following terms of asserted claims 1, 4, and 18 are indefinite under 35 U.S.C. § 112(b), and/or lack written description support under 35 U.S.C. § 112(a):

1. "plurality of data subcarriers" (Claims 1 & 18)

Indefiniteness: The term "plurality" lacks definitiveness as to the amount of data subcarriers and therefore lacks a clear quantitative or objective standard. What does "plurality" mean? Why do claims 1 and 18 first recite a "plurality of data subcarriers," then only refer to "data subcarriers" without the "plurality" aspect? Are they trying to quantitatively differentiate between the "plurality of data subcarriers," versus mere "data subcarriers"?

Written Description: The specification does not provide an explanation of what constitutes a "plurality" of data subcarriers.

2. "partially filling the frequency gap" / "partially fill the frequency gap" (Claims 1 & 18)

Indefiniteness: The term "partially filling/fill" lacks a clear quantitative or objective standard. What percentage of the frequency gap must be filled for it to be considered "partial"? Does "partially" refer to uniformly distributed subcarriers or only some regions being filled?

Written Description: The specification does not provide an explanation of what constitutes "partially" filling/filled in a way that distinguishes it from fully filling/filled.

3. "one or more guard bands" (Claims 1 & 18)

Indefiniteness: The phrase "one or more guard bands" is vague. If a system uses multiple guard bands or different sizes of guard bands, does the claim apply to all configurations? Without defining the minimum or maximum required spacing, the claim scope is unclear.

Written Description: The specification does not clearly define how the guard bands are formed or constrained. If guard bands are fundamental to the claimed invention, they should be described with specific examples or constraints.

4. "using full spectral synthesis capability of a fast Fourier transform or an inverse fast Fourier transform" (Claims 1 & 18)

Indefiniteness: The phrase "full spectral synthesis capability" is ambiguous. Does "full" mean that all available subcarriers must be utilized? Does it require a specific mathematical implementation? If different FFT/IFFT algorithms process data differently, how do we determine what qualifies as "full spectral synthesis capability"?

5. "combining the first channel and the second channel using channel bonding with orthogonal frequency division multiplexing (OFDM)" (Claims 1 & 18)

Indefiniteness: The term "combining" is broad and not clearly defined. Does it mean concatenation of two channels? Does it mean joint encoding of data across both channels? Can the method use adaptive or dynamic bonding, or must it be static?

6. "transmitting the first channel and the second channel comprises transmitting to multiple radios" (Claim 4)

Indefiniteness: The phrase "transmitting to multiple radios" is unclear. Does it mean simultaneous transmission to all radios, or can transmission be sequential? Must each radio receive data from both channels, or can one radio receive data from only one channel?

Written Description: The specification does not describe how the first channel and second channel transmit to "multiple radios."

E. U.S. Patent No. 7,324,469

Claims 24, 25, 26, and 32 of the '469 Patent (herein, the "Asserted '469 Claims") are invalid under 35 U.S.C. §§ 112(a) and 112(b), respectively, for at least the reasons discussed below.

The Asserted '469 Claims contain subject matter that was not described in the specification in such a way as to reasonably convey to one skilled in the relevant art that the applicants, at the time the application was filed, had possession of the claimed invention. In addition, the Asserted '469 Claims contain subject matter that was not described in the specification in such a way as to enable one of ordinary skill in the art to make and/or use the invention. Further, the Asserted '469 Claims fail to particularly point out and distinctly claim the invention, such that the claim's scope cannot be ascertained with reasonable certainty.

To the extent that the Asserted '469 Claims are construed broadly to cover undisclosed embodiments, the claims are invalid because the '469 Patent specification does not enable a person skilled in the art to practice the full scope of the purported invention, nor does the '469 Patent specification show the applicants had within their possession the full scope of the Asserted '469 Claims. Further, to the extent that any of the Asserted '469 Claims are construed sufficiently broadly to cover one or more of the various accused products identified in IV's infringement contentions, such claims are invalid pursuant to at least 35 U.S.C. § 112(a).

Southwest contends that the following terms of asserted claims 24 and 32 are indefinite under 35 U.S.C. § 112(b), and/or lack written description support under 35 U.S.C. § 112(a):

1. An "Internet Hotspot"

Indefiniteness: to the extent the preamble is found to be limiting, it is unclear whether an "Internet Hotspot" is intended to exclude any manner of providing wired or wireless internet access to one or more users. In particular, the specification states that "[t]he present invention provides

rural 'Hotspots' (***s**uch as Wi-Fi access, for example*) to enable wireless and hard wired, satellite distributed Internet access for anyone with a PC or other web-ready device (wireless ready or cabled) and a valid credit card." '469 patent at 1:34-37 (emphasis added).

Written Description: to the extent the preamble is found to be limiting, the specification fails to define a "Hotspot" or distinguish a "Hotspot" from any other manner of providing "Wi-Fi access, for example."

2. "subscriber access unit" / "the subscriber access unit being capable of authenticating a subscription account associated with a user prior to allowing the user access to the Internet" (Claim 24)

Indefiniteness: This term is indefinite, as the patent makes no attempt to define a "subscriber access unit" other than its "being capable of authenticating a subscription account associated with a user prior to allowing the user access to the Internet." The specification contains contradictory descriptions of "authentication," including that "account status is *first* authenticated by the remote server" but that "*authentication of the user's account is performed by a subscriber merchant service*," in which case the described remote subscriber access unit is not "capable of authenticating a subscription account" as recited in the claim. '469 2:9-10 (emphasis added); *id*. at 2:33-34 ("authentication of the user's account is performed by a subscriber merchant service"). The specification's occasional use of capitalization indicates the patentee intended this to be a defined term, but failed to include its definition. *E.g*., 4:2-3.

Written Description: The specification provides no description of how the subscriber access unit operates to be "capable of authenticating a subscription account associated with a user prior to allowing the user access to the Internet," by example or otherwise.

3. "operatively coupled to," "operatively coupled between" (Claim 24)

Indefiniteness: As used in the patent, the term "operatively coupled" is vague and ambiguous and thus indefinite. In particular, for example, the specification provides that "[a]s used

herein, the term 'operatively coupled' refers to any configuration in which two or more devices *interact in any way*, by wired or wireless connections." '469 patent at 4:25-28 (emphasis added). A person of ordinary skill in the art would be unable to determine the scope of the invention, particularly whether any order or configuration of recited components is required, including whether intervening components would render a system within the scope or not.

Written Description: The limitation lacks written description to enable one skilled in the art to practice the invention, instead confirming "operatively coupled" or "operatively coupled between" have no meaning at all as used in the patent.

4. "a web-ready device operatively coupled to the at least one router" (Claim 24)

Indefiniteness: This term is indefinite as used in the claim and in view of the Plaintiff's Preliminary Infringement Contentions, which indicate that "enabling" end-user devices to access the Internet is sufficient to provide, as the claim requires, a "web-ready device."

Written Description: The limitation lacks written description because the specification merely repeats the term "web-ready device" without description.

5. "a remote location experiencing a relatively high volume of transient traffic" (Claim 24)

Indefiniteness: This limitation is indefinite because a person skilled in the art cannot ascertain with reasonable certainty the scope of what is "a remote location," "a relatively high volume" or "transient traffic." The specification provides the examples of "rest areas, restaurants, truck stops, rural hotels, conference centers, motels and state park lodges" ('469 patent at 1:41-44), all of which can and do have wildly different volumes of traffic and wildly different relation to the term "transient." For example, a conference center may house upwards of thousands of attendees who remain in the location for days on end. A truck stop might see anywhere from a handful to several hundred visitors, but for only brief periods of time during rest periods on

trucking routes. A restaurant can be located in a busy shopping mall or in a quaint hamlet. Yet all are examples in the specification of "remote location[s] experiencing a relatively high volume of transient traffic." The specification provides no hints as to how remote is "remote," how many users makes a "relatively high volume," and how much or little time connected is sufficient to constitute "transient traffic."

Written Description: The specification provides no description of "a remote location experiencing a relatively high volume of transient traffic" except by inconsistent examples, instead repeatedly reciting only the claim language for this term.

6. "the data connection is one of a wired data connection and a wireless data connection" (Claim 25)

Indefiniteness: This claim is indefinite in view of the specification and claim 24, in which a "user may authenticate the Subscription account and access the Internet at the remote location by establishing **a** data connection," singular. It is unclear whether claim 25 requires the simultaneous use of wired and wireless connections by the user for the same data connection of claim 24. If claim 25 does not refer to "a data connection" recited in claim 24, it lacks antecedent basis.

Written Description: The specification does not describe the use of "a wired data connection and a wireless data connection" for a single data connection as recited by claim 25 and in view of independent claim 24.

7. "the wireless connection is one of an 802.11a wireless area network, an 802.11b wireless area network, an 802.11g wireless area network, and an 802.11n wireless area network" (Claim 32)

Indefiniteness: This claim is indefinite for lack of antecedent basis insofar as "the wireless connection" lacks antecedent basis; claim 25 recites "wherein the data connection is one of a wired data connection and a wireless data connection," not a "wireless connection." It is unclear whether

"wireless connection" and "wireless data connection" are intended to be interchangeable, and, if so, how a simultaneously wired and wireless data connection can comprise "one of an 802.11a wireless area network . . ."

Written Description: The specification lacks written description of an "802.11n wireless area network" at least insofar as the 802.11n standard had not yet been drafted by the time of the filing of the provisional application giving rise to the '469 patent. *See supra* VIII.2.

F. U.S. Patent No. 7,257,582

Claims 1, 2, 5, and 7 of the '582 Patent (herein, the "Asserted '582 Claims") are invalid under 35 U.S.C. §§ 112(a) and 112(b), respectively, for at least the reasons discussed below.

The Asserted '582 Claims contain subject matter that was not described in the specification in such a way as to reasonably convey to one skilled in the relevant art that the applicants, at the time the application was filed, had possession of the claimed invention. In addition, the Asserted '582 Claims contain subject matter that was not described in the specification in such a way as to enable one of ordinary skill in the art to make and/or use the invention. Further, the Asserted '582 Claims fail to particularly point out and distinctly claim the invention, such that the claim's scope cannot be ascertained with reasonable certainty.

To the extent that the Asserted '582 Claims are construed broadly to cover undisclosed embodiments the claims are invalid because the '582 Patent specification does not enable a person skilled in the art to practice the full scope of the purported invention, nor does the '582 Patent specification show the applicants had within their possession the full scope of the Asserted '582 Claims. Further, to the extent that any of the Asserted '582 Claims are construed sufficiently broadly to cover one or more of the various accused products identified in IV's infringement contentions, such claims are invalid pursuant to at least 35 U.S.C. § 112(a).

Southwest contends that the following terms of asserted claims 1, 2, 5, and 7 are indefinite under 35 U.S.C. § 112(b), and/or lack written description support under 35 U.S.C. § 112(a):

1. "automatically determining file allocation and logically subdividing records of said input file into a plurality of partitions" (Claim 1)

Indefiniteness: The term "automatically determining file allocation" is vague and undefined. What criteria define "automatic" allocation? Is the allocation based on file size, content, metadata, or another heuristic? Can manual intervention be involved at any stage and still meet this limitation? The phrase "logically subdividing records" is also ambiguous. What constitutes a logical subdivision? Does the subdivision require a specific algorithm or data structure? If different methods (e.g., fixed-size vs. content-based) could be used, which ones fall under the claim scope?

2. "distributing descriptions of all of said partitions to each of a plurality of subtask processors" (Claim 1)

Written Description: The specification does not provide examples or implementations for how "descriptions" are structured or distributed.

3. "repeating step (c) in at least some of the subtask processors each with another unprocessed partition on a first-come/first-served basis" (Claim 1)

Indefiniteness: The phrase "first-come/first-served basis" is undefined. The specification does not appear to describe how a first-come/first-served scheduling policy is implemented.

4. "generating at least one output combining all of the subtask outputs and reflecting the processing of all of said subtasks" (Claim 1)

Written Description: The specification does not provide a detailed method for combining outputs (e.g., sorting, appending, aggregating), nor does it address whether outputs must be stored in a specific format or can remain in multiple files.

5. "wherein the output in step (e) is an accumulation of output records from said subtasks in an arbitrary order" (Claim 5)

Indefiniteness: The phrase "arbitrary order" is ambiguous. Does it mean randomized order? Just non-sorted? If two identical executions produce different orderings, does that still meet the claim limitation?

G. U.S. Patent No. 7,712,080

Claims 1, 3–6, 9, 17, and 18 of the '080 Patent (herein, the "Asserted '080 Claims") are invalid under 35 U.S.C. §§ 112(a) and 112(b), respectively, for at least the reasons discussed below.

The Asserted '080 Claims contain subject matter that was not described in the specification in such a way as to reasonably convey to one skilled in the relevant art that the applicants, at the time the application was filed, had possession of the claimed invention. In addition, the Asserted '080 Claims contain subject matter that was not described in the specification in such a way as to enable one of ordinary skill in the art to make and/or use the invention. Further, the Asserted '080 Claims fail to particularly point out and distinctly claim the invention, such that the claim's scope cannot be ascertained with reasonable certainty.

To the extent that the Asserted '080 Claims are construed broadly to cover undisclosed embodiments, the claims are invalid because the '080 Patent specification does not enable a person skilled in the art to practice the full scope of the purported invention, nor does the '080 Patent specification show the applicants had within their possession the full scope of the Asserted '080 Claims. Further, to the extent that any of the Asserted '080 Claims are construed sufficiently broadly to cover one or more of the various accused products identified in IV's infringement contentions, such claims are invalid pursuant to at least 35 U.S.C. § 112(a).

Southwest contends that the following terms of asserted claims 1, 3–6, 9, 17, and 18 are indefinite under 35 U.S.C. § 112(b), and/or lack written description support under 35 U.S.C. § 112(a). Any claims dependent from Claim 1 and 9 are invalid under 35 U.S.C. §§ 112(a) and 112(b) for at least the same reasons.

1. **"at least one intermediate condition" (Claims 1 and 9)**

Written Description: The specification never uses the phrase "at least one intermediate condition" or even "intermediate condition" and in the context of the claim, the phrase lacks written description support.

2. **"wherein the at least one intermediate condition comprising one intermediate result" (Claims 1 and 9)**

Indefiniteness: What is meant by that at least one intermediate condition "comprises" one intermediate result? Is the result the condition or vice versa? How can a condition comprise a result? Without a defined meaning, the phrase is open to multiple interpretations, making the claim scope uncertain.

Written Description: The specification never uses the phrase "at least one intermediate condition," "at least one intermediate condition comprising one intermediate result," or even "intermediate condition" and in the context of the claim, the phrase lacks written description support.

3. **"wherein the distributed parallel computing program is configured to operate across a distributed shared memory system" (Claims 17 and 18)**

Indefiniteness: What is meant by that the distributed parallel computing program operates across a shared memory system? The specification only mentions makes passing mention to "shared memory systems" as existing in prior systems, such as clusters and networks of

workstations. However, it is unclear how the distributed parallel computing program that is the subject of the '080 Patent claims configured to operate across a shared memory system. Without a defined meaning, the phrase is open to multiple interpretations, making the claim scope uncertain.

Written Description and/or Enablement: The specification only mentions makes passing mention to "shared memory systems" as existing in prior systems, such as clusters and networks of workstations, but the specification lacks disclosure as to how the '080 Patent's disclosed distributed parallel computing program is configured to operate across such shared memory networks, and, thus, in the context of the claim, the phrase lacks written description support and/or enablement.

H. U.S. Patent No. 7,721,282

Claims 1, 4, 5, 8–10, 13, 15–17, 20, 21, 24–26, and 29 of the '282 Patent (herein, the "Asserted '282 Claims") are invalid under 35 U.S.C. §§ 112(a) and 112(b), respectively, for at least the reasons discussed below.

The Asserted '282 Claims contain subject matter that was not described in the specification in such a way as to reasonably convey to one skilled in the relevant art that the applicants, at the time the application was filed, had possession of the claimed invention. In addition, the Asserted '282 Claims contain subject matter that was not described in the specification in such a way as to enable one of ordinary skill in the art to make and/or use the invention. Further, the Asserted '282 Claims fail to particularly point out and distinctly claim the invention, such that the claim's scope cannot be ascertained with reasonable certainty.

To the extent that the Asserted '282 Claims are construed broadly to cover undisclosed embodiments, the claims are invalid because the '282 Patent specification does not enable a person skilled in the art to practice the full scope of the purported invention, nor does the 282 Patent

specification show the applicants had within their possession the full scope of the Asserted '282 Claims. Further, to the extent that any of the Asserted '282 Claims are construed sufficiently broadly to cover one or more of the various accused products identified in IV's infringement contentions, such claims are invalid pursuant to at least 35 U.S.C. § 112(a).

Southwest contends that the following terms of asserted claims 1, 4, 5, 8–10, 13, 15–17, 20, 21, 24–26, and 29 are indefinite under 35 U.S.C. § 112(b), and/or lack written description support under 35 U.S.C. § 112(a). Any claims dependent from Claim 1 and 15 are invalid under 35 U.S.C. §§ 112(a) and 112(b) for at least the same reasons.

1. **"merging the blocks of the root image stored on the first storage unit with the blocks of the leaf image stored on the second storage unit" (Claims 1 and 15)**

Indefiniteness: The claim does not specify what "merging" means in this context. Overwriting blocks in the root image with leaf image data? Appending new blocks without modifying existing ones? Interleaving blocks from the root and leaf images?

2. **"a low-level driver" (Claim 1) and "at an operational level" (Claim 26)**

Indefiniteness: What is meant by "low level" or "operational level"? Kernel-level operations? Middleware interactions? File system APIs? Without a defined meaning, the phrase is open to multiple interpretations, making the claim scope uncertain.

Written Description: The specification never uses the phrase "operational level," and in the context of the claim, the phrase lacks written description support.

3. **"modifying the leaf image in response to the compute node's access to the application environment" (Claim 16)**

Indefiniteness: This phrase refers to modifying a leaf image in response to a compute node accessing an application environment, but the term "access" is undefined and ambiguous. What

type of access qualifies? Write operations only? Read operations? Execution of code within a block? Any attempted access, even if the operation is unsuccessful? The claim does not clarify whether a single access event is sufficient to trigger modification, or if modification occurs in response to a write request.

I. U.S. Patent No. 8,352,584

Claims 1-13 of the ’584 Patent (herein, the “Asserted ’584 Claims”) are invalid under 35 U.S.C. §§ 112(a) and 112(b), respectively, for at least the reasons discussed below.

The Asserted ’584 Claims contain subject matter that was not described in the specification in such a way as to reasonably convey to one skilled in the relevant art that the applicants, at the time the application was filed, had possession of the claimed invention. In addition, the Asserted ‘844 Claims contain subject matter that was not described in the specification in such a way as to enable one of ordinary skill in the art to make and/or use the invention. Further, the Asserted ’584 Claims fail to particularly point out and distinctly claim the invention, such that the claim’s scope cannot be ascertained with reasonable certainty.

To the extent that the Asserted ’584 Claims are construed broadly to cover undisclosed embodiments, the claims are invalid because the ’584 Patent specification does not enable a person skilled in the art to practice the full scope of the purported invention, nor does the ’584 Patent specification show the applicants had within their possession the full scope of the Asserted ’584 Claims. Further, to the extent that any of the Asserted ’584 Claims are construed sufficiently broadly to cover one or more of the various accused products identified in IV’s infringement contentions, such claims are invalid pursuant to at least 35 U.S.C. § 112(a).

Southwest contends that the following terms of asserted claims 1 and 10 are indefinite under 35 U.S.C. § 112(b), and/or lack written description support under 35 U.S.C. § 112(a):

1. **"wherein the first cluster is a high performance cluster; and wherein the second cluster is a high performance cluster" (claim 1) and "a first high performance computing (HPC) cluster … [and] a second HPC cluster" (claim 10).**

Indefiniteness: The phrase "high performance cluster" appears to be used in the '584 Patent to refer to systems in which a "large problem is broken down into smaller independent tasks that are assigned to individual computers in the cluster allowing the large problem to be solved faster" ('584 Patent at 1:58-62). The '584 Patent distinguishes high performance clusters from "[o]ther types of clusters that … include the "load balancing cluster" and the "high availability cluster"" ('584 Patent at 2:17-19). However, the '584 Patent also describes load balancing clusters as implementing task-based distribution among clusters: "A load balancing cluster is a configuration in which a server sends small individual tasks to a cluster of additional servers when it is overloaded" ('584 Patent at 2:20-22); *see also* the description of "incorporat[ing] multiple cluster types, such as HPC or load-balancing clusters, within the managed multi-cluster" ('584 Patent at 2:37-40). If both high performance clusters and load balancing clusters are characterized by distributing tasks among clusters of a multi-cluster system, what feature(s) differentiate the two cluster types?

Written Description/Enablement: The '584 Patent provides insufficient description of high performance clusters and load balancing clusters to allow those skilled in the art to determine whether a cluster implementation is a "high performance cluster."

2. **"communications between the first cluster and the second cluster are isolated" (claim 1) and "communications between the first HPC cluster and the second HPC cluster are isolated" (claim 10).**

Indefiniteness: These phrases require that <u>communications</u> between clusters be "isolated." However, the patent does not provide a clear definition or description of what constitutes "isolated" communications. On one hand, the patent suggests that "isolated" communications involves complete separation of "private" communications networks, with no use of shared

communications paths beyond common connection to a public network and with each "private cluster network" having separate monitoring: "private cluster communications network are separated, (e.g., do not have to share bandwidth of a single system network)" ('584 Patent at 3:52-56); "Hosted clusters allow for easily expandable clusters since each cluster is isolated or is maintained as a standalone unit in communication with a network for communications with a corresponding client and monitoring equipment and/or software modules." ('584 Patent at 4:53-57; *see also* Figs. 2, 3A-3C, and 4). However, the claims recite common monitoring for all clusters, implicating some overlap in communications paths: "a monitoring system to monitor operations of the first cluster and the second cluster for communications problems" (claim 1); "a monitoring system to monitor operation of the first private cluster network and the second private cluster network" (claim 10); "wherein the monitoring system: … issues an alert in response to the identified operational or connectivity problems indicating a corresponding one of the first cluster or the second cluster or a combination thereof" (claim 5); "wherein the monitoring system: monitors the first and second clusters to identify the operational and connectivity problems" (claim 6); and "wherein the monitoring system further comprises a central monitoring system" (claim 7).

Written Description/Enablement: The specification contains conflicting descriptions of how "isolated" communications. As noted above, the specification states "gateway mechanisms operate, in part, to isolate each cluster such that communications within a cluster such as on the private cluster communications network are separated (e.g., do not have to share bandwidth of a single system network)." On the other hand, the specification also describes routers ("gateways") merely need to "control access of the clients to the clusters such that a client can only access particular ones of the clusters" in order to effect "isolation of each cluster, i.e., using the gateways 240, 241, 242 as described previously."

J. U.S. Patent No. 11,032,000

Claims 1-6 and 13-18 of the '000 Patent (herein, the "Asserted '000 Claims") are invalid under 35 U.S.C. §§ 112(a) and 112(b), respectively, for at least the reasons discussed below.

The Asserted '000 Claims contain subject matter that was not described in the specification in such a way as to reasonably convey to one skilled in the relevant art that the applicants, at the time the application was filed, had possession of the claimed invention. In addition, the Asserted '000 Claims contain subject matter that was not described in the specification in such a way as to enable one of ordinary skill in the art to make and/or use the invention. Further, the Asserted '000 Claims fail to particularly point out and distinctly claim the invention, such that the claim's scope cannot be ascertained with reasonable certainty.

To the extent that the Asserted '000 Claims are construed broadly to cover undisclosed embodiments, the claims are invalid because the '000 Patent specification does not enable a person skilled in the art to practice the full scope of the purported invention, nor does the '000 Patent specification show the applicants had within their possession the full scope of the Asserted '000 Claims. Further, to the extent that any of the Asserted '000 Claims are construed sufficiently broadly to cover one or more of the various accused products identified in IV's infringement contentions, such claims are invalid pursuant to at least 35 U.S.C. § 112(a).

Southwest contends that the following terms of asserted claims 1-6 and 13-18 are indefinite under 35 U.S.C. § 112(b), and/or lack written description support under 35 U.S.C. § 112(a). Any claims dependent from Claim 1 and 13 are invalid under 35 U.S.C. §§ 112(a) and 112(b) for at least the same reasons.

1. **"wherein a number of bits sent over the physical control channel is based on a number of fields of control information to be sent to the UE" (Claims 1 and 13)**

Indefiniteness: What is meant by that the number of bits is based on a number of fields of control information? Does the number of bits increase based on a number of fields? The specification merely describes that a number of bits for the capacity of the PLCCH is matched to a number of bits required in a feedback field, but does not describe that a number of bits change based on *a number of* fields. Without a defined meaning, the phrase is open to multiple interpretations, making the claim scope uncertain.

Written Description: The specification does not describe that a number of bits is based on a number of fields of control information. The specification merely describes that a number of bits for the capacity of the PLCCH is matched to a number of bits required in a feedback field, but does not describe that a number of bits change based on *a number of* fields. Thus, in the context of the claim, the phrase lacks written description support.

2. **"assigned time intervals" and "in a time interval that it is not sending information over the physical uplink shared channel" (Claims 1 and 13)**

Indefiniteness: How is a time interval for data transmitted defined? How is it assigned? When does a time interval in which information is not received over the physical uplink shared channel occur? The specification does not use the term "time interval," nor does the specification clearly describe situations in which transmissions are sent during a time interval that it is not sending information over the physical uplink shared channel. Without a defined meaning, the phrase is open to multiple interpretations, making the claim scope uncertain.

Written Description: The specification does not use the term "time interval," nor does the specification clearly describe situations in which transmissions are sent during a time interval that it is not sending information over the physical uplink shared channel. Thus, in the context of the claim, the phrase lacks written description support.

XV. GROUNDS OF INVALIDITY BASED ON OBVIOUSNESS-TYPE DOUBLE PATENTING

A. Obviousness-Type Double Patenting of the '844 Patent in View of U.S. Patent No. 7,721,282

Southwest provides further notice to Plaintiffs that the asserted claims of the '844 Patent are invalid under the doctrine of obviousness-type double patenting ("OTDP") in view of claim 15 of U.S. Patent No. 7,721,282 (the "'282 Patent"). Because the asserted claims of the '844 Patent are directed to the same invention recited by claims presented in the '282 Patent, and because any differences in the asserted claims of the '844 Patent are, at most, obvious modifications of claims in the '282 Patent, the asserted '844 Patent claims are invalid. *See AbbVie Inc. v. Mathilda & Terrence Kennedy Inst. of Rheumatology Tr.*, 764 F.3d 1366, 1373 (Fed. Cir. 2014).

The '282 Patent is available as an OTDP reference against the '844 Patent. The '282 Patent was filed on March 30, 2006, issued on May 18, 2010, and is set to expire on December 19, 2027. The '844 Patent was filed on February 21, 2007, issued on December 11, 2012, and is set to expire on April 6, 2028. Thus, the '282 Patent was filed earlier than the '844 Patent, issued earlier than the '844 Patent, and is set to expire earlier than the '844 Patent.

As is the case here, where "the applicant chooses to file separate applications for overlapping subject matter . . . the doctrine of obviousness-type double patenting ensures that a particular invention (and obvious variants thereof) does not receive an undue patent term extension." *AbbVie*, 764 F.3d at 1373. Therefore, the earlier-filed, earlier-issued, and earlier-expiring '282 Patent qualifies as a double patenting reference.

Given that the '844 Patent and the reference '282 Patent share at least one common inventor and common ownership, determining whether a patent claim is invalid for OTDP entails two steps. *See id.* at 1374. The first step determines the differences between the respective claims of the two patents. The second step determines whether those differences render the later-expiring set of

claims sufficiently different to be patentably distinct. *Id.* "The second part of this analysis is analogous to the obviousness inquiry under 35 U.S.C. § 103 in the sense that if an earlier claim renders obvious or anticipates a later claim, the later claim is not patentably distinct and is thus invalid for obviousness-type double patenting." *UCB, Inc. v. Accord Healthcare, Inc.*, 890 F.3d 1313, 1323 (Fed. Cir. 2018) (citation omitted). The disclosure of the reference patent may be used to determine whether the claims merely define an obvious variation of what is disclosed and claimed in the reference patent. *Abbvie*, 764 F.3d at 1381.

The attached claim chart in Exhibit 844-OTDP-1 demonstrates that, to the extent there are any differences between the asserted claims of the '844 Patent and claims of the '282 Patent, these differences are not patentably distinct. The charts provide reasons why a person of ordinary skill in the art would conclude that the alleged invention defined in the asserted claims of the '844 Patent would have been an obvious variation of the alleged invention defined in the corresponding claim or claims of the '282 Patent.

B. Obviousness-Type Double Patenting of the '844 Patent in View of U.S. Patent No. 7,870,106

Southwest provides further notice to Plaintiffs that the asserted claims of the '844 Patent are invalid under the doctrine of obviousness-type double patenting ("OTDP") in view of claim 1 of U.S. Patent No. 7,870,106 (the "'106 Patent"). Because the asserted claims of the '844 Patent are directed to the same invention recited by claims presented in the '106 Patent, and because any differences in the asserted claims of the '844 Patent are, at most, obvious modifications of claims in the '106 Patent, the asserted '844 Patent claims are invalid. *See AbbVie Inc. v. Mathilda & Terrence Kennedy Inst. of Rheumatology Tr.*, 764 F.3d 1366, 1373 (Fed. Cir. 2014).

The '106 Patent is available as an OTDP reference against the '844 Patent. The '106 Patent was filed on February 2, 2006, issued on January 11, 2011, and is set to expire on May 18, 2027.

The ‘844 Patent was filed on February 21, 2007, issued on December 11, 2012, and is set to expire on April 6, 2028. Thus, the ‘106 Patent was filed earlier than the ‘844 Patent, issued earlier than the ‘844 Patent, and is set to expire earlier than the ‘844 Patent.

As is the case here, where “the applicant chooses to file separate applications for overlapping subject matter . . . the doctrine of obviousness-type double patenting ensures that a particular invention (and obvious variants thereof) does not receive an undue patent term extension.” *AbbVie*, 764 F.3d at 1373. Therefore, the earlier-filed, earlier-issued, and earlier-expiring ‘106 Patent qualifies as a double patenting reference.

Given that the ‘844 Patent and the reference ‘106 Patent share at least one common inventor and common ownership, determining whether a patent claim is invalid for OTDP entails two steps. *See id.* at 1374. The first step determines the differences between the respective claims of the two patents. The second step determines whether those differences render the later-expiring set of claims sufficiently different to be patentably distinct. *Id.* “The second part of this analysis is analogous to the obviousness inquiry under 35 U.S.C. § 103 in the sense that if an earlier claim renders obvious or anticipates a later claim, the later claim is not patentably distinct and is thus invalid for obviousness-type double patenting.” *UCB, Inc. v. Accord Healthcare, Inc.*, 890 F.3d 1313, 1323 (Fed. Cir. 2018) (citation omitted). The disclosure of the reference patent may be used to determine whether the claims merely define an obvious variation of what is disclosed and claimed in the reference patent. *Abbvie*, 764 F.3d at 1381.

The attached claim chart in Exhibit 844-OTDP-2 demonstrates that, to the extent there are any differences between the asserted claims of the ‘844 Patent and claims of the ‘106 Patent, these differences are not patentably distinct. The charts provide reasons why a person of ordinary skill in the art would conclude that the alleged invention defined in the asserted claims of the ‘844

Patent would have been an obvious variation of the alleged invention defined in the corresponding claim or claims of the '106 Patent.

Southwest reserves the right to assert any other double patenting challenges against any of the Asserted Patents.

XVI. INVALIDITY CHARTS

Invalidity charts for each item of prior art are attached to these contentions as Exhibits 844-1 – 844-24, Exhibits 844-OTDP-1 – 844-OTDP-2, Exhibits 722-1 – 722-11, Exhibits 785-1 – 785-29, Exhibits 326-1 – 326-11, Exhibits 469-1 – 469-13, Exhibits 582-1 – 582-6, Exhibits 080-1 – 080-6, Exhibits 282-1 – 282-21, Exhibits 584-1 – 584-3, and Exhibits 000-1 – 000-6,. These invalidity charts identify where in the prior art references each element of the asserted claim is found. While each element of each asserted claim is found in the identified prior art in multiple locations, the attached charts provide examples of citations sufficient to identify at least one such location where each claim limitation is found in each item of prior art. But the specific citations are only exemplary. Accordingly, Southwest and its expert(s) may rely on uncited portions of the prior art references as the citations must be interpreted in light of the entire disclosure of each reference. Additionally, because persons of skill in the art generally would appreciate an item of prior art in the context of other publications, literature, products, and understanding, Southwest and its expert(s) may rely on other publications and expert testimony as aids in understanding and interpreting the cited portions, for providing context to the cited portions, and as additional evidence that the prior art discloses a claimed feature. Southwest may establish what was known to a person having ordinary skill in the art through other publications, products, and/or testimony, and reserves their right to rely on cited and uncited portions of the prior art references, other publications, and/or testimony to establish that a person of skill in the art would have been motivated to combine the references rendering the claims obvious.

Southwest may modify its interpretation of the prior art based on additional analysis by Southwest's expert(s) and/or based on other circumstances that may affect the meaning or application of the claims.

XVII. DOCUMENT PRODUCTION

Southwest has produced the prior art references identified in these invalidity contentions. As noted herein, Southwest has produced or is producing the below listed Exhibits with these invalidity contentions.

Exhibits	Description
844-1 – 844-24	Invalidity Charts for the '844 Patent
722-1 – 722-11	Invalidity Charts for the '722 Patent
785-1 – 785-29	Invalidity Charts for the '785 Patent
326-1 – 326-11	Invalidity Charts for the '326 Patent
469-1 – 469-13	Invalidity Charts for the '469 Patent
582-1 – 582-6	Invalidity Charts for the '582 Patent
080-1 – 080-6	Invalidity Charts for the '080 Patent
282-1 – 282-21	Invalidity Charts for the '282 Patent
584-1 – 584-3	Invalidity Charts for the '584 Patent
000-1 – 000-6	Invalidity Charts for the '000 Patent
844-OTDP-1 – 844-OTDP-2	Invalidity Charts Demonstrating Obviousness-Type Double Patenting for the '844 Patent

Date: August 25, 2025

Respectfully submitted,

/s/ S. Wallace Dunwoody

Michael C. Wilson
Texas Bar No. 21704590
mwilson@munckwilson.com

S. Wallace Dunwoody
Texas Bar No. 24040838
wdunwoody@munckwilson.com
MUNCK WILSON MANDALA, LLP
2000 McKinney Avenue, Suite 1900
Dallas, Texas 75201
(972) 628-3600
(972) 628-3616 fax

David G. Henry
Texas Bar. No. 09479355
dhenry@munckwilson.com
MUNCK WILSON MANDALA, LLP
510 Austin Avenue, Suite 3100
Waco, Texas 76701
(254) 362-2300

Tri T. Truong
Texas Bar No. 24102969
ttruong@munckwilson.com
MUNCK WILSON MANDALA, LLP
807 Las Cimas Parkway, Suite 300
Austin, Texas 78756
737-201-1600

Attorneys for Southwest Airlines Co.

CERTIFICATE OF SERVICE

I hereby certify that on August 25, 2025, a true and correct copy of Defendant Southwest Airlines Co.'s Preliminary Invalidity Contentions and accompanying exhibits were served via electronic mail to counsel of record.

/s/ S. Wallace Dunwoody
S. Wallace Dunwoody