WIRELESS communications

Principles & Practice

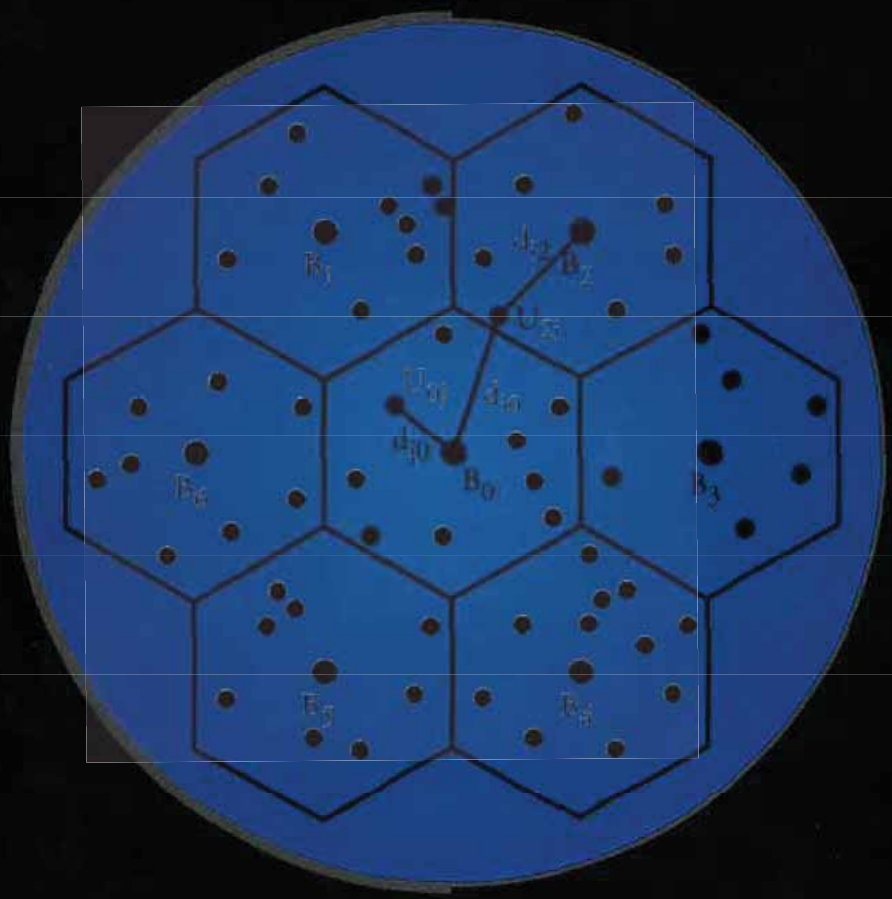

Theodore S. Rappaport

PRENTICE HALL COMMUNICATIONS ENGINEERING AND EMERGING TECHNOLOGIES SERIES
THEODORE S. RAPPAPORT, SERIES EDITOR

Wireless Communications

Principles and Practice

Theodore S. Rappaport

For book and bookstore information

http://www.prenhall.com

Prentice Hall PTR
Upper Saddle River, New Jersey 07458

Prentice Hall Communications Engineering and Emerging Technologies Series

Theodore S. Rappaport, Series Editor

RAPPAPORT *Wireless Communication: Principles & Practice*

RAZAVI *RF Microelectronics*

FORTHCOMING

LIBERTI & RAPPAPORT *Smart Antennas for CDMA Wireless Systems: Applications to IS-95 and Wideband CDMA*

TRANTER, KOSBAR, RAPPAPORT & SHANMUGAN *Simulation of Modern Communication Systems with Wireless Applications*

GARG & WILKES *Principles and Applications of GSM*

The LORD has blessed me
with a wonderful family
to whom this book is dedicated

To my wife Brenda Marie,
and to our children
Matthew, Natalie, and Jennifer

Editorial/production manager: *Camille Trentacoste*
Cover design director: *Jerry Votta*
Cover designer: *Anthony Gemmellaro*
Manufacturing manager: *Alexis R. Heydt*
Acquisitions editor: *Karen Gettman*
Editorial assistant: *Barbara Alfieri*

© 1996 by Prentice Hall, PTR
Prentice Hall, Inc.
Upper Saddle River, NJ 07458

The publisher offers discounts on this book when ordered in bulk quantities. For more information, contact Corporate Sales Department, Prentice Hall PTR, One Lake Street, Upper Saddle River, NJ 07458. Phone: 800-382-3419; FAX: 201- 236-7141. E-mail: corpsales@prenhall.com

All rights reserved. No part of this book may be reproduced, in any form or by any means, without permission in writing from the publisher.

All product names mentioned herein are the trademarks of their respective owners.

Printed in the United States of America
10 9

ISBN 0-13-375536-3

Reprinted with corrections July, 1999

Prentice-Hall International (UK) Limited, *London*
Prentice-Hall of Australia Pty. Limited, *Sydney*
Prentice-Hall of Canada, Inc., *Toronto*
Prentice-Hall Hispanoamericana, S. A., *Mexico*
Prentice-Hall of India Private Limited, *New Delhi*
Prentice-Hall of Japan, Inc., *Tokyo*
Prentice-Hall Asia Pte. Ltd., *Singapore*
Editora Prentice-Hall do Brasil, Ltda., *Rio de Janeiro*

Contents

Preface xi

1 Introduction to Wireless Communication Systems 1

1.1 Evolution of Mobile Radio Communications 1

1.2 Mobile Radiotelephone in the U.S. 4

1.3 Mobile Radio Systems Around the World 6

1.4 Examples of Mobile Radio Systems 9

1.4.1 Paging Systems 11

1.4.2 Cordless Telephone Systems 13

1.4.3 Cellular Telephone Systems 14

1.4.4 Comparison of Common Mobile Radio Systems 17

1.5 Trends in Cellular Radio and Personal Communications 20

1.6 Problems 22

2 The Cellular Concept — System Design Fundamentals 25

2.1 Introduction 25

2.2 Frequency Reuse 26

2.3 Channel Assignment Strategies 30

2.4 Handoff Strategies 31

2.4.1 Prioritizing Handoffs 34

2.4.2 Practical Handoff Considerations 34

2.5 Interference and System Capacity 37

2.5.1 Co-channel Interference and System Capacity 37

2.5.2 Adjacent Channel Interference 41

2.5.3 Power Control for Reducing Interference 43

2.6 Trunking and Grade of Service 44

Samsung Exhibit 1018, Page 6 of 71
Samsung Electronics Co., Ltd. et al. v. One-E-Way, Inc.
IPR2025-01516

2.7 Improving Capacity in Cellular Systems 54
2.7.1 Cell Splitting 54
2.7.2 Sectoring 57
2.7.3 A Novel Microcell Zone Concept 61
2.8 Summary 63
2.9 Problems 63
3 Mobile Radio Propagation: Large-Scale Path Loss 69
3.1 Introduction to Radio Wave Propagation 69
3.2 Free Space Propagation Model 70
3.3 Relating Power to Electric Field 74
3.4 The Three Basic Propagation Mechanisms 78
3.5 Reflection 78
3.5.1 Reflection from Dielectrics 79
3.5.2 Brewster Angle 84
3.5.3 Reflection from Perfect Conductors 85
3.6 Ground Reflection (2-ray) Model 85
3.7 Diffraction 90
3.7.1 Fresnel Zone Geometry 91
3.7.2 Knife-edge Diffraction Model 94
3.7.3 Multiple Knife-edge Diffraction 99
3.8 Scattering 100
3.8.1 Radar Cross Section Model 101
3.9 Practical Link Budget Design using Path Loss Models 102
3.9.1 Log-distance Path Loss Model 102
3.9.2 Log-normal Shadowing 104
3.9.3 Determination of Percentage of Coverage Area 106
3.10 Outdoor Propagation Models 110
3.10.1 Longley-Rice Model 110
3.10.2 Durkin's Model — A Case Study 111
3.10.3 Okumura Model 116
3.10.4 Hata Model 119
3.10.5 PCS Extension to Hata Model 120
3.10.6 Walfisch and Bertoni Model 120
3.10.7 Wideband PCS Microcell Model 121
3.11 Indoor Propagation Models 123
3.11.1 Partition Losses (same floor) 123
3.11.2 Partition Losses between Floors 126
3.11.3 Log-distance Path Loss Model 126
3.11.4 Ericsson Multiple Breakpoint Model 128
3.11.5 Attenuation Factor Model 128
3.12 Signal Penetration into Buildings 131
3.13 Ray Tracing and Site Specific Modeling 132
3.14 Problems 133

4 Mobile Radio Propagation: Small-Scale Fading and Multipath 139
4.1 Small-Scale Multipath Propagation 139
4.1.1 Factors Influencing Small-Scale Fading 140
4.1.2 Doppler Shift 141
4.2 Impulse Response Model of a Multipath Channel 143
4.2.1 Relationship Between Bandwidth and Received Power 147
4.3 Small-Scale Multipath Measurements 153
4.3.1 Direct RF Pulse System 154
4.3.2 Spread Spectrum Sliding Correlator Channel Sounding 155
4.3.3 Frequency Domain Channel Sounding 158
4.4 Parameters of Mobile Multipath Channels 159
4.4.1 Time Dispersion Parameters 160
4.4.2 Coherence Bandwidth 163
4.4.3 Doppler Spread and Coherence Time 165
4.5 Types of Small-Scale Fading 167
4.5.1 Fading Effects Due to Multipath Time Delay Spread 168
4.5.2 Fading Effects Due to Doppler Spread 170
4.6 Rayleigh and Ricean Distributions 172
4.6.1 Rayleigh Fading Distribution 172
4.6.2 Ricean Fading Distribution 174
4.7 Statistical Models for Multipath Fading Channels 176
4.7.1 Clarke's Model for Flat Fading 177
4.7.2 Simulation of Clarke and Gans Fading Model 181
4.7.3 Level Crossing and Fading Statistics 185
4.7.4 Two-ray Rayleigh Fading Model 188
4.7.5 Saleh and Valenzuela Indoor Statistical Model 188
4.7.6 SIRCIM and SMRCIM Indoor and Outdoor Statistical Models 189
4.8 Problems 192
5 Modulation Techniques for Mobile Radio 197
5.1 Frequency Modulation vs. Amplitude Modulation 198
5.2 Amplitude Modulation 199
5.2.1 Single Sideband AM 202
5.2.2 Pilot Tone SSB 203
5.2.3 Demodulation of AM signals 206
5.3 Angle Modulation 206
5.3.1 Spectra and Bandwidth of FM Signals 208
5.3.2 FM Modulation Methods 209
5.3.3 FM Detection Techniques 211
5.3.4 Tradeoff Between SNR and Bandwidth in an FM Signal 219
5.4 Digital Modulation — an Overview 220
5.4.1 Factors That Influence the Choice of Digital Modulation 221
5.4.2 Bandwidth and Power Spectral Density of Digital Signals 224
5.4.3 Line Coding 225
5.5 Pulse Shaping Techniques 225
5.5.1 Nyquist Criterion for ISI Cancellation 227

5.5.2 Raised Cosine Rolloff Filter 229
5.5.3 Gaussian Pulse-shaping Filter 233
5.6 Geometric Representation of Modulation Signals 234
5.7 Linear Modulation Techniques 238
5.7.1 Binary Phase Shift Keying (BPSK) 238
5.7.2 Differential Phase Shift Keying (DPSK) 242
5.7.3 Quadrature Phase Shift Keying (QPSK) 243
5.7.4 QPSK Transmission and Detection Techniques 246
5.7.5 Offset QPSK 247
5.7.6 $\pi/4$ QPSK 249
5.7.7 $\pi/4$ QPSK Transmission Techniques 249
5.7.8 $\pi/4$ QPSK Detection Techniques 252
5.8 Constant Envelope Modulation 254
5.8.1 Binary Frequency Shift Keying 256
5.8.2 Minimum Shift Keying (MSK) 259
5.8.3 Gaussian Minimum Shift Keying (GMSK) 261
5.9 Combined Linear and Constant Envelope Modulation Techniques 267
5.9.1 M-ary Phase Shift Keying (MPSK) 267
5.9.2 M-ary Quadrature Amplitude Modulation (QAM) 270
5.9.3 M-ary Frequency Shift Keying (MFSK) 272
5.10 Spread Spectrum Modulation Techniques 274
5.10.1 Pseudo-noise (PN) Sequences 275
5.10.2 Direct Sequence Spread Spectrum (DS-SS) 276
5.10.3 Frequency Hopped Spread Spectrum (FH-SS) 278
5.10.4 Performance of Direct Sequence Spread Spectrum 280
5.10.5 Performance of Frequency Hopping Spread Spectrum 283
5.11 Modulation Performance in Fading and Multipath Channels 284
5.11.1 Performance of Digital Modulation in Slow, Flat Fading Channels 285
5.11.2 Digital Modulation in Frequency Selective Mobile Channels 289
5.11.3 Performance of $\pi/4$ DQPSK in Fading and Interference 290
5.12 Problems 294
6 Equalization, Diversity, and Channel Coding 299
6.1 Introduction 299
6.2 Fundamentals of Equalization 300
6.3 A Generic Adaptive Equalizer 303
6.4 Equalizers in a Communications Receiver 307
6.5 Survey of Equalization Techniques 308
6.6 Linear Equalizers 310
6.7 Nonlinear Equalization 312
6.7.1 Decision Feedback Equalization (DFE) 313
6.7.2 Maximum Likelihood Sequence Estimation (MLSE) Equalizer 315
6.8 Algorithms for Adaptive Equalization 316
6.8.1 Zero Forcing Algorithm 318
6.8.2 Least Mean Square Algorithm 319
6.8.3 Recursive Least Squares Algorithm 321
6.8.4 Summary of Algorithms 323

6.9 Fractionally Spaced Equalizers 323
6.10 Diversity Techniques 325
6.10.1 Derivation of Selection Diversity Improvement 326
6.10.2 Derivation of Maximal Ratio Combining Improvement 328
6.10.3 Practical Space Diversity Considerations 330
6.10.4 Polarization Diversity 332
6.10.5 Frequency Diversity 335
6.10.6 Time Diversity 335
6.11 RAKE Receiver 336
6.12 Interleaving 338
6.13 Fundamentals of Channel Coding 339
6.14 Block Codes 340
6.14.1 Examples of Block Codes 344
6.14.2 Case Study of Reed-Solomon Codes 346
6.15 Convolutional Codes 352
6.15.1 Decoding of Convolutional Codes 354
6.16 Coding Gain 356
6.17 Trellis Coded Modulation 356
6.18 Problems 357
7 Speech Coding 361
7.1 Introduction 361
7.2 Characteristics of Speech Signals 363
7.3 Quantization Techniques 365
7.3.1 Uniform Quantization 365
7.3.2 Nonuniform Quantization 365
7.3.3 Adaptive Quantization 368
7.3.4 Vector Quantization 368
7.4 Adaptive Differential Pulse Code Modulation 369
7.5 Frequency Domain Coding of Speech 371
7.5.1 Sub-band Coding 372
7.5.2 Adaptive Transform Coding 375
7.6 Vocoders 376
7.6.1 Channel Vocoders 376
7.6.2 Formant Vocoders 377
7.6.3 Cepstrum Vocoders 377
7.6.4 Voice-Excited Vocoder 378
7.7 Linear Predictive Coders 378
7.7.1 LPC Vocoders 378
7.7.2 Multi-pulse Excited LPC 381
7.7.3 Code-Excited LPC 382
7.7.4 Residual Excited LPC 383
7.8 Choosing Speech Codecs for Mobile Communications 384
7.9 The GSM Codec 387
7.10 The USDC Codec 389
7.11 Performance Evaluation of Speech Coders 389
7.12 Problems 392

8 Multiple Access Techniques for Wireless Communications 395
8.1 Introduction 395
8.1.1 Introduction to Multiple Access 396
8.2 Frequency Division Multiple Access (FDMA) 397
8.3 Time Division Multiple Access (TDMA) 400
8.4 Spread Spectrum Multiple Access 404
8.4.1 Frequency Hopped Multiple Access (FHMA) 404
8.4.2 Code Division Multiple Access (CDMA) 405
8.4.3 Hybrid Spread Spectrum Techniques 407
8.5 Space Division Multiple Access (SDMA) 409
8.6 Packet Radio 410
8.6.1 Packet Radio Protocols 411
8.6.2 Carrier Sense Multiple Access (CSMA) Protocols 415
8.6.3 Reservation Protocols 416
8.6.4 Capture Effect in Packet Radio 416
8.7 Capacity of Cellular Systems 417
8.7.1 Capacity of Cellular CDMA 422
8.7.2 Capacity of CDMA with Multiple Cells 425
8.7.3 Capacity of Space Division Multiple Access 431
8.8 Problems 437
9 Wireless Networking 439
9.1 Introduction to Wireless Networks 439
9.2 Differences Between Wireless and Fixed Telephone Networks 441
9.2.1 The Public Switched Telephone Network (PSTN) 441
9.2.2 Limitations in Wireless Networking 443
9.2.3 Merging Wireless Networks and the PSTN 444
9.3 Development of Wireless Networks 445
9.3.1 First Generation Wireless Networks 445
9.3.2 Second Generation Wireless Networks 448
9.3.3 Third Generation Wireless Networks 449
9.4 Fixed Network Transmission Hierarchy 449
9.5 Traffic Routing in Wireless Networks 450
9.5.1 Circuit Switching 452
9.5.2 Packet Switching 452
9.5.3 The X.25 Protocol 454
9.6 Wireless Data Services 455
9.6.1 Cellular Digital Packet Data (CDPD) 455
9.6.2 Advanced Radio Data Information Systems (ARDIS) 457
9.6.3 RAM Mobile Data (RMD) 457
9.7 Common Channel Signaling (CCS) 458
9.7.1 The Distributed Central Switching Office for CCS 459
9.8 Integrated Services Digital Network (ISDN) 461
9.8.1 Broadband ISDN and ATM 463
9.9 Signaling System No. 7 (SS7) 463
9.9.1 Network Services Part (NSP) of SS7 465

9.9.2 The SS7 User Part 466
9.9.3 Signaling Traffic in SS7 467
9.9.4 SS7 Services 468
9.9.5 Performance of SS7 469
9.10 An example of SS7 — Global Cellular Network Interoperability 469
9.11 Personal Communication Services/Networks (PCS/PCN) 472
9.11.1 Packet vs. Circuit switching for PCN 472
9.11.2 Cellular Packet-Switched Architecture 473
9.12 Protocols for Network Access 477
9.12.1 Packet Reservation Multiple Access (PRMA) 478
9.13 Network Databases 479
9.13.1 Distributed Database for Mobility Management 479
9.14 Universal Mobile Telecommunication System (UMTS) 480
9.15 Summary 481
10 Wireless Systems and Standards 483
10.1 AMPS and ETACS 483
10.1.1 AMPS and ETACS System Overview 484
10.1.2 Call Handling in AMPS and ETACS 485
10.1.3 AMPS and ETACS Air Interface 487
10.1.4 N-AMPS 491
10.2 United States Digital Cellular (IS-54) 491
10.2.1 USDC Radio Interface 493
10.2.2 United States Digital Cellular Derivatives (IS-94 and IS-136) 500
10.3 Global System for Mobile (GSM) 500
10.3.1 GSM Services and Features 501
10.3.2 GSM System Architecture 502
10.3.3 GSM Radio Subsystem 505
10.3.4 GSM Channel Types 507
10.3.5 Example of a GSM Call 512
10.3.6 Frame Structure for GSM 513
10.3.7 Signal Processing in GSM 515
10.4 CDMA Digital Cellular Standard (IS-95) 519
10.4.1 Frequency and Channel Specifications 520
10.4.2 Forward CDMA Channel 521
10.4.3 Reverse CDMA Channel 527
10.4.4 IS-95 with 14.4 kbps Speech Coder [ANS95] 533
10.5 CT2 Standard For Cordless Telephones 533
10.5.1 CT2 Services and Features 533
10.5.2 The CT2 Standard 534
10.6 Digital European Cordless Telephone (DECT) 535
10.6.1 Features and Characteristics 535
10.6.2 DECT Architecture 536
10.6.3 DECT Functional Concept 537
10.6.4 DECT Radio Link 538

10.7 PACS — Personal Access Communication Systems 539
10.7.1 PACS System Architecture 540
10.7.2 PACS Radio Interface 541
10.8 Pacific Digital Cellular (PDC) 543
10.9 Personal Handyphone System (PHS) 544
10.10 U.S. PCS and ISM Bands 544
10.11 U.S. Wireless Cable Television 547
10.12 Summary of Standards Throughout the World 548
10.13 Problems 551

APPENDICES

A Trunking Theory 555
A.1 Erlang B 556
A.1.1 Derivation of Erlang B 556
A.2 Erlang C 561
A.2.1 Derivation of Erlang C 561
B Noise Figure Calculations for Link Budgets 565
C Gaussian Approximations for Spread Spectrum CDMA 569
C.1 The Gaussian Approximation 577
C.2 The Improved Gaussian Approximation (IGA) 582
C.3 A Simplified Expression for the Improved Gaussian Approximation (SEIGA) 585
D Q, erf & erfc Functions 593
D.1 The Q-Function 593
D.2 The erf and erfc functions 595
E Mathematical Tables 599
F Abbreviations and Acronyms 607
G References 617
Index 635

Preface

The purpose of this text is to initiate the newcomer to cellular radio and wireless personal communications, one of the fastest growing fields in the engineering world. Technical concepts which are at the core of design, implementation, research, and invention of wireless communication systems are presented in an order that is conducive to understanding general concepts, as well as those specific to particular cellular and personal communication systems and standards. This text is based upon my experiences as an educator, researcher, and consultant, and is modeled from an academic course developed for electrical engineering students as well as a self-study course for practicing engineers and technicians, developed at the request of the Institute of Electrical and Electronics Engineers (IEEE). References to journal articles are used liberally throughout this text to enable the interested reader to delve into additional reading that is always required to master any field. However, for handbook or classroom use, or for those who find it difficult to pursue outside reading, this text has been written as a complete, self-contained teaching and reference book. Numerous examples and problems have been provided to help the reader solidify the material.

This book has been designed for the student or practicing engineer who is already familiar with technical concepts such as probability, communication theory, and basic electromagnetics. However, like the wireless communications industry itself, this book combines material from many different technical disciplines, so it is unlikely that any one person will have had introductory courses for all of the topics covered. To accommodate a wide range of backgrounds, important concepts throughout the text are developed from first principles, so that readers learn the foundations of wireless communications. This approach

Samsung Exhibit 1018, Page 14 of 71
Samsung Electronics Co., Ltd. et al. v. One-E-Way, Inc.
IPR2025-01516

makes it possible to use this book as a handbook within industry, or as a teaching tool in a classroom setting.

The material and chapter sequence in this text have been adapted from an entry-level graduate course which I first taught in 1991 at the Virginia Polytechnic Institute and State University. Chapter 1 demonstrates the rapid growth of cellular radio throughout the world and provides a glimpse into the future. Chapter 2 covers cellular radio concepts such as frequency reuse and handoff, which are at the core of providing wireless communication service to subscribers on the move using limited radio spectrum. Chapter 2 also demonstrates how interference between mobiles and base stations affects the capacity of cellular systems. Chapter 3 presents radio propagation path loss and log-normal shadowing and describes different ways to model and predict the large-scale effects of radio propagation in many operating environments. Chapter 4 covers small-scale propagation effects such as fading, time delay spread, and Doppler spread, and describes how to measure and model the impact that signal bandwidth and motion have on the instantaneous received signal through the multipath channel. Radio wave propagation has historically been the most difficult problem to analyze and design for, since unlike a wired communication system which has a constant, stationary transmission channel (i.e., a wired path), radio channels are random and undergo shadowing and multipath fading, particularly when one of the terminals is in motion.

Chapter 5 provides extensive coverage of the most common analog and digital modulation techniques used in mobile communications and demonstrates trade-offs that must be made in selecting a modulation method. Issues such as receiver complexity, modulation and demodulation implementation, bit error rate analysis for fading channels, and spectral occupancy are presented. Channel coding, adaptive equalization, and antenna diversity concepts are presented in Chapter 6. In portable radio systems where people communicate while walking or driving, these methods may be used individually or in tandem to improve the quality (that is, reduce the bit error rate) of digital mobile radio communications in the presence of fading and noise.

Chapter 7 provides an introduction to speech coding. In the past decade there has been remarkable progress in decreasing the needed data rate of high quality digitized speech, which enables wireless system designers to match end-user services to network architectures. Principles which have driven the development of adaptive pulse code modulation and linear predictive coding techniques are presented, and how these techniques are used to evaluate speech quality in existing and proposed cellular, cordless, and personal communication systems are discussed. Chapter 8 introduces time, frequency, and code division multiple access, as well as more recent multiple access techniques such as packet reservation and space division multiple access. Chapter 8 also describes how each access method can accommodate a large number of mobile users and

Samsung Exhibit 1018, Page 15 of 71
Samsung Electronics Co., Ltd. et al. v. One-E-Way, Inc.
IPR2025-01516

demonstrates how multiple access impacts capacity and the network infrastructure of a cellular system. Chapter 9 describes networking considerations for wide area wireless communication systems, and presents practical networking approaches that are in use or have been proposed for future wireless systems. Chapter 10 unites all of the material from the first nine chapters by describing and comparing the major existing and proposed cellular, cordless, and personal communication systems throughout the world. The trade-offs made in the design and implementation of wireless personal communications systems are illuminated in this final chapter. The compilation of the major wireless standards makes Chapter 10 particularly useful as a single source of information for a wide range of systems.

Appendices which cover trunking theory, noise calculations, and the Gaussian approximation for spread spectrum code division systems provide details for those interested in solving practical wireless communications problems.

For industry use, Chapters 1—4 and 8 will benefit working engineers in the cellular system design and radio frequency (RF) testing/maintenance/measurement areas. Chapters 5—7 are tailored for modem designers and digital signal processing (DSP) engineers new to wireless. Chapters 9 and 10 should have broad appeal to network operators and managers, as well as working engineers.

To use this text at the undergraduate level, the instructor may wish to concentrate on Chapters 1—5, or Chapters 1—4, and 8, leaving the other chapters for treatment in a second semester undergraduate course or a graduate level course. Alternatively, traditional undergraduate courses on communications or network theory may find in Chapters 1, 2, 3, 5, 7, 8, and 9 useful material that can be inserted easily into the standard curriculum. In using this text at the graduate level, I have been successful in covering most of the material in Chapters 1—8 during a standard half-year semester. In Chapters 9 and 10, I have attempted to cover important but rarely compiled information on practical network implementations and worldwide standards.

Without the help and ingenuity of several former Virginia Tech graduate students, this text could not have been written. I am pleased to acknowledge the help and encouragement of Rias Muhamed, Varun Kapoor, Kevin Saldanha, and Anil Doradla – students I met in class while teaching the course *Cellular Radio and Personal Communications*. Kevin Saldanha also provided camera ready copy for this text (which turned out to be no small task!). The assistance of these students in compiling and editing materials for several chapters of this text was invaluable, and they were a source of constant encouragement throughout the project. Others who offered helpful suggestions, and whose research efforts are reflected in portions of this text, include Scott Seidel, Joe Liberti, Dwayne Hawbaker, Marty Feuerstein, Yingie Li, Ken Blackard, Victor Fung, Weifang Huang, Prabhakar Koushik, Orlando Landron, Francis Dominique, and Greg Bump. Zhi-

Samsung Exhibit 1018, Page 16 of 71
Samsung Electronics Co., Ltd. et al. v. One-E-Way, Inc.
IPR2025-01516

gang Rong, Jeff Laster, Michael Buehrer, Keith Brafford, and Sandip Sandhu also provided useful suggestions and helpful reviews of early drafts.

This text benefits greatly from practical input provided by several industry reviewers. Roman Zaputowycz of Bell Atlantic Mobile Systems, Mike Bamburak of McCaw Communications, David McKay of Ortel, Jihad Hermes of PrimeCo , Robert Rowe of Ariel Communications, William Gardner of Qualcomm, John Snapp of AT&T Wireless, and Jim Durcan of Comcast Cellular provided extremely valuable input as to what materials were most important, and how they could best be presented for students and practicing engineers. Marty Feuerstein of Lucent Technologies and Mike Lord of Cellular One provided comprehensive reviews which have greatly improved the manuscript. The technical staff at Grayson Electronics also provided feedback and practical suggestions during the development of this text.

From the academic perspective, a number of faculty in the wireless communications field provided useful suggestions which I readily incorporated. These reviewers include Prof. J. Keith Townsend of North Carolina State University and Prof. William H. Tranter of the University of Missouri-Rolla. Professors Jeffrey Reed and Brian Woerner of Virginia Tech also provided excellent recommendations from a teaching perspective. I am grateful for the invaluable contributions from all of these individuals. Also, I wish to thank the numerous faculty, students, and practicing engineers from around the world who have provided valuable feedback and who are using this book in classrooms and short courses.

I am pleased to acknowledge the support of the National Science Foundation, the Defense Advanced Research Project Agency, and the many sponsors and friends of the Mobile & Portable Radio Research Group, who have supported our research and educational activities in wireless communications since 1990. It is from the excellent faculty at Purdue University, particularly my advisor, Clare D. McGillem, that I formally learned about communications and how to build a research program. I consider myself fortunate to have been one of the many graduate students who was stimulated to pursue a dual career in engineering and education upon graduation from Purdue.

Finally, it is a pleasure to acknowledge my family and students, who put up with my preoccupation on this project, Barbara Coburn and Jill Cals of the IEEE, who championed the IEEE self-study course on the same subject, and Karen Gettman and Camille Trentacoste of Prentice Hall, who commissioned this work and helped me bring this text to you.

Theodore S. Rappaport

Samsung Exhibit 1018, Page 17 of 71
Samsung Electronics Co., Ltd. et al. v. One-E-Way, Inc.
IPR2025-01516

1.2 Mobile Radiotelephone in the U.S.

In 1946, the first public mobile telephone service was introduced in twenty-five major American cities. Each system used a single, high-powered transmitter and large tower in order to cover distances of over 50 km in a particular market. The early FM push-to-talk telephone systems of the late 1940s used 120 kHz of RF bandwidth in a half-duplex mode (only one person on the telephone call could talk at a time), even though the actual telephone-grade speech occupies only 3 kHz of baseband spectrum. The large RF bandwidth was used because of the difficulty in mass-producing tight RF filters and low-noise, front-end receiver amplifiers. In 1950, the FCC doubled the number of mobile telephone channels per market, but with no new spectrum allocation. Improved technology enabled the channel bandwidth to be cut in half to 60 kHz. By the mid 1960s, the FM bandwidth of voice transmissions was cut to 30 kHz. Thus, there was only a factor of 4 increase in spectrum efficiency due to technology advances from WW II to the mid 1960s. Also in the 1950s and 1960s, automatic channel trunking was introduced and implemented under the label IMTS (Improved Mobile Telephone Service). With IMTS, telephone companies began offering full duplex, auto-dial, auto-trunking phone systems [Cal88]. However, IMTS quickly became saturated in major markets. By 1976, the Bell Mobile Phone service for the New York City market (a market of about 10,000,000 people) had only twelve channels and could serve only 543 paying customers. There was a waiting list of over 3,700 people [Cal88], and service was poor due to call blocking and usage over the few channels. IMTS is still in use in the U.S., but is very spectrally inefficient when compared to today's U.S. cellular system.

During the 1950s and 1960s, AT&T Bell Laboratories and other telecommunications companies throughout the world developed the theory and techniques of cellular radiotelephony — the concept of breaking a coverage zone (market) into small cells, each of which reuse portions of the spectrum to increase spectrum usage at the expense of greater system infrastructure [Mac79]. The basic idea of cellular radio spectrum allocation is similar to that used by the FCC when it allocates television stations or radio stations with different channels in a region of the country, and then reallocates those same channels to different stations in a completely different part of the country. Channels are only reused when there is sufficient distance between the transmitters to prevent interference. However, cellular relies on reusing the same channels within the same market or service area. AT&T proposed the concept of a cellular mobile system to the FCC in 1968, although technology was not available to implement cellular telephony until the late 1970s. In 1983, the FCC finally allocated 666 duplex channels (40 MHz of spectrum in the 800 MHz band, each channel having a one-way bandwidth of 30 kHz for a total spectrum occupancy of 60 kHz for each duplex channel) for the U.S. Advanced Mobile Phone System (AMPS) [You79]. According to FCC rules, each city (called a market) was only

allowed to have two cellular radio system providers, thus providing a *duopoly* within each market which would assure some level of competition. As described in Chapters 2 and 10, the radio channels were split equally between the two carriers. AMPS was the first U.S. cellular telephone system, and was deployed in late 1983 by Ameritech in Chicago, IL [Bou91]. In 1989, the FCC granted an additional 166 channels (10 MHz) to U.S. cellular service providers to accommodate the rapid growth and demand. Figure 1.2 illustrates the spectrum currently allocated for U.S. cellular telephone use. Cellular radio systems operate in an interference-limited environment and rely on judicious frequency reuse plans (which are a function of the market-specific propagation characteristics) and frequency division multiple access (FDMA) to maximize capacity. These concepts will be covered in detail in subsequent chapters of this text.

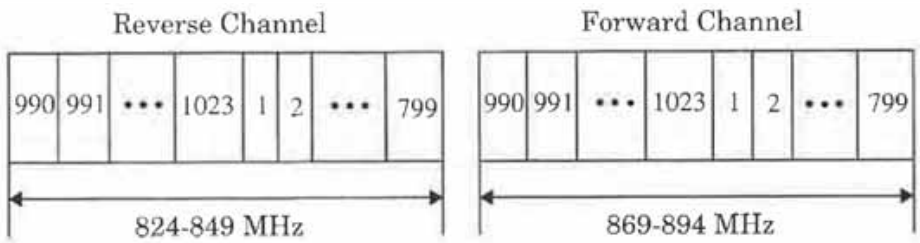

	Channel Number	Center Frequency (MHz)
Reverse Channel	$1 \le N \le 799$	$0.030N + 825.0$
	$990 \le N \le 1023$	$0.030(N - 1023) + 825.0$
Forward Channel	$1 \le N \le 799$	$0.030N + 870.0$
	$990 \le N \le 1023$	$0.030(N - 1023) + 870.0$

(Channels 800 - 989 are unused)

Figure 1.2
Frequency spectrum allocation for the U.S. cellular radio service. Identically labeled channels in the two bands form a forward and reverse channel pair used for duplex communication between the base station and mobile. Note that the forward and reverse channels in each pair are separated by 45 MHz.

In late 1991, the first U.S. Digital Cellular (USDC) system hardware was installed in major U.S. cities. The USDC standard (Electronic Industry Association Interim Standard IS-54) allows cellular operators to replace gracefully some single-user analog channels with digital channels which support three users in the same 30 kHz bandwidth [EIA90]. In this way, U.S. carriers can gradually phase out AMPS as more users accept digital phones. As discussed in Chapters 8 and 10, the capacity improvement offered by USDC is three times that of AMPS, because digital modulation ($\pi/4$ differential quadrature phase shift keying), speech coding, and time division multiple access (TDMA) are used in place of analog FM and FDMA. Given the rate of digital signal processing advancements,

Samsung Exhibit 1018, Page 19 of 71
Samsung Electronics Co., Ltd. et al. v. One-E-Way, Inc.
IPR2025-01516

speech coding technology will increase the capacity to six users per channel in the same 30 kHz bandwidth within a few years.

A cellular system based on code division multiple access (CDMA) has been developed by Qualcomm, Inc. and standardized by the Telecommunications Industry Association (TIA) as an Interim Standard (IS-95). This system supports a variable number of users in 1.25 MHz wide channels using direct sequence spread spectrum. While the analog AMPS system requires that the signal be at least 18 dB above the co-channel interference to provide acceptable call quality, CDMA systems can operate at much larger interference levels because of their inherent interference resistance properties. The ability of CDMA to operate with a much smaller signal-to-noise ratio than conventional narrowband FM techniques allows CDMA systems to use the same set of frequencies in every cell, which provides a large improvement in capacity [Gil91]. Unlike other digital cellular systems, the Qualcomm system uses a variable rate vocoder with voice activity detection which considerably reduces the required data rate and also the battery drain by the mobile transmitter.

In the early 1990s, a new specialized mobile radio service (SMR) was developed to compete with U.S. cellular radio carriers. By purchasing small groups of radio system licenses from a large number of independent private radio service providers throughout the country, Nextel and Motorola have formed an extended SMR (E-SMR) network in the 800 MHz band that could provide capacity and services similar to cellular. Using Motorola's integrated radio system (MIRS), SMR integrates voice dispatch, cellular phone service, messaging, and data transmission capabilities on the same network [Fil95].

New Personal Communication Service (PCS) licenses in the 1800/1900 MHz band were auctioned by the U.S. Government to wireless providers in early 1995, and these promise to spawn new wireless services that will complement, as well as compete with, cellular and SMR. One of the stipulations of the PCS license is that a majority of the coverage area be operational before the year 2000. Thus, there is pressure on PCS licensees to "build-out" each market. As many as five PCS licenses are allocated for each major U.S. city (see Chapter 10).

1.3 Mobile Radio Systems Around the World

Many mobile radio standards have been developed for wireless systems throughout the world, and more standards are likely to emerge. Table 1.1 through Table 1.3 lists the most common paging, cordless, cellular, and personal communications standards used in North America, Europe, and Japan. The differences between the basic types of wireless systems are described in Section 1.5, and are covered in detail in Chapter 10.

The world's most common paging standard is the Post Office Code Standard Advisory Group (POCSAG) [CCI86],[San82]. POCSAG was developed by British Post Office in the late 1970s and supports binary frequency shift keying (FSK)

microcellular systems. However, satellite mobile systems offer tremendous promise for paging, data collection, and emergency communications, as well as for global roaming before IMT-2000 is deployed. In early 1990, the aerospace industry demonstrated the first successful launch of a small satellite on a rocket from a jet aircraft. This launch technique is more than an order of magnitude less expensive than conventional ground-based launches and can be deployed quickly, suggesting that a network of LEOs could be rapidly deployed for wireless communications around the globe. Already, several companies have proposed systems and service concepts for worldwide paging, cellular telephone, and emergency navigation and notification [IEE91].

In emerging nations, where existing telephone service is almost nonexistent, fixed cellular telephone systems are being installed at a rapid rate. This is due to the fact that developing nations are finding it is quicker and more affordable to install cellular telephone systems for fixed home use, rather than install wires in neighborhoods which have not yet received telephone connections to the PSTN.

The world is now in the early stages of a major telecommunications revolution that will provide ubiquitous communication access to citizens, wherever they are [Kuc91], [Goo91], [ITU94]. This new field requires engineers who can design and develop new wireless systems, make meaningful comparisons of competing systems, and understand the engineering trade-offs that must be made in any system. Such understanding can only be achieved by mastering the fundamental technical concepts of wireless personal communications. These concepts are the subject of the remaining chapters of this text.

1.6 Problems

1.1 Why do paging systems need to provide low data rates? How does a low data rate lead to better coverage?

1.2 Qualitatively describe how the power supply requirements differ between mobile and portable cellular phones, as well as the difference between pocket pagers and cordless phones. How does coverage range impact battery life in a mobile radio system?

1.3 In simulcasting paging systems, there usually is one dominant signal arriving at the paging receiver. In most, but not all cases, the dominant signal arrives from the transmitter closest to the paging receiver. Explain how the FM capture effect could help reception of the paging receiver. Could the FM capture effect help cellular radio systems? Explain how.

1.4 Where would walkie-talkies fit in Tables 1.5 and 1.6? Carefully describe the similarities and differences between walkie-talkies and cordless telephones. Why would consumers expect a much higher grade of service for a cordless telephone system?

1.5 Assume a 1 Amp-hour battery is used on a cellular telephone (often called a cellular subscriber unit). Also assume that the cellular telephone draws 35 mA in idle mode and 250 mA during a call. How long would the phone work (i.e. what is the battery life) if the user leaves the phone on continually and has

Samsung Exhibit 1018, Page 21 of 71
Samsung Electronics Co., Ltd. et al. v. One-E-Way, Inc.
IPR2025-01516

one 3-minute call every day? every 6 hours? every hour? What is the maximum talk time available on the cellular phone in this example?

1.6 Assume a CT2 subscriber unit has the same size battery as the phone in Problem 1.5, but the paging receiver draws 5 mA in idle mode and the transceiver draws 80 mA during a call. Recompute the CT2 battery life for the call rates given in Problem 1.5. Recompute the maximum talk time for the CT2 handset.

1.7 Why would one expect the CT2 handset in Problem 1.6 to have a smaller battery drain during transmission than a cellular telephone?

1.8 Why is FM, rather than AM, used in most mobile radio systems today? List as many reasons as you can think of, and justify your responses. Consider issues such as fidelity, power consumption, and noise.

1.9 List the factors that led to the development of (a) the GSM system for Europe, and (b) the U.S. digital cellular system. Compare and contrast the importance for both efforts to (i) maintain compatibility with existing cellular phones. (ii) obtain spectral efficiency. (iii) obtain new radio spectrum.

1.10 Assume that a GSM, an IS-95, and a U.S. digital cellular base station transmit the same power over the same distance. Which system will provide the best SNR at a mobile receiver? What is the SNR improvement over the other two systems? Assume a perfect receiver with only thermal noise present in each of the three systems.

1.11 Discuss the similarities and differences between a conventional cellular radio system and a space-based (satellite) cellular radio system. What are the advantages and disadvantages of each system? Which system could support a larger number of users for a given frequency allocation? Why? How would this impact the cost of service for each subscriber?

1.12 Assume that wireless communication standards can be classified as belonging to one of the following four groups:

High power, wide area systems (cellular)
Low power, local area systems (cordless telephone and PCS)
Low data rate, wide area systems (mobile data)
High data rate, local area systems (wireless LANs)

Classify each of the wireless standards described in Tables 1.1 - 1.3 using these four groups. Justify your answers. Note that some standards may fit into more than one group.

1.13 Discuss the importance of regional and international standards organizations such as ITU-R, ETSI, and WARC. What competitive advantages are there in using different wireless standards in different parts of the world? What disadvantages arise when different standards and different frequencies are used in different parts of the world?

1.14 Based on the proliferation of wireless standards throughout the world, discuss how likely it is for IMT-2000 to be adopted. Provide a detailed explanation, along with probable scenarios of services, spectrum allocations, and cost.

Samsung Exhibit 1018, Page 22 of 71
Samsung Electronics Co., Ltd. et al. v. One-E-Way, Inc.
IPR2025-01516

1989, the FCC allocated an additional 10 MHz of spectrum for cellular services, and this allowed 166 new channels to be added to the AMPS system. There are now 832 channels used in AMPS. The forward channel (870.030 MHz) along with the corresponding reverse channel (825.030 MHz) is numbered as channel 1. Similarly the forward channel 889.98 MHz along with the reverse channel 844.98 MHz is numbered as channel 666 (see Figure 1.2). The extended band has channels numbered as 667 through 799, and 990 through 1023.

In order to encourage competition, the FCC licensed the channels to two competing operators in every service area, and each operator received half of the total channels. The channels used by the two operators are distinguished as *block A* and *block B* channels. Block B is operated by companies which have traditionally provided telephone services (called *wireline operators*), and Block A is operated by companies that have not traditionally provided telephone services (called *nonwireline operators*).

Out of the 416 channels used by each operator, 395 are voice channels and the remaining 21 are control channels. Channels 1 through 312 (voice channels) and channels 313 through 333 (control channels) are block A channels, and channels 355 through 666 (voice channels) and channels 334 through 354 (control channels) are block B channels. Channels 667 through 716 and 991 through 1023 are the extended Block A voice channels, and channels 717 through 799 are extended Block B voice channels.

Each of the 395 voice channels are divided into 21 subsets, each containing about 19 channels. In each subset, the closest adjacent channel is 21 channels away. In a 7-cell reuse system, each cell uses 3 subsets of channels. The 3 subsets are assigned such that every channel in the cell is assured of being separated from every other channel by at least 7 channel spacings. This channel assignment scheme is illustrated in Table 2.2. As seen in Table 2.2, each cell uses channels in the subsets, iA + iB + iC, where i is an integer from 1 to 7. The total number of voice channels in a cell is about 57. The channels listed in the upper half of the chart belong to block A and those in the lower half belong to block B. The shaded set of numbers correspond to the control channels which are standard to all cellular systems in North America.

2.5.3 Power Control for Reducing Interference

In practical cellular radio and personal communication systems the power levels transmitted by every subscriber unit are under constant control by the serving base stations. This is done to ensure that each mobile transmits the smallest power necessary to maintain a good quality link on the reverse channel. Power control not only helps prolong battery life for the subscriber unit, but also dramatically reduces the reverse channel S/I in the system. As shown in Chapters 8 and 10, power control is especially important for emerging CDMA spread spectrum systems that allow every user in every cell to share the same radio channel.

Table 2.2 AMPS channel allocation for A side and B side carriers

Channel allocation chart for the 832 channel AMPS system

1A	2A	3A	4A	5A	6A	7A	1B	2B	3B	4B	5B	6B	7B	1C	2C	3C	4C	5C	6C	7C	
1	2	3	4	5	6	7	8	9	10	11	12	13	14	15	16	17	18	19	20	21	
22	23	24	25	26	27	28	29	30	31	32	33	34	35	36	37	38	39	40	41	42	
43	44	45	46	47	48	49	50	51	52	53	54	55	56	57	58	59	60	61	62	63	
64	65	66	67	68	69	70	71	72	73	74	75	76	77	78	79	80	81	82	83	84	
85	86	87	88	89	90	91	92	93	94	95	96	97	98	99	100	101	102	103	104	105	
106	107	108	109	110	111	112	113	114	115	116	117	118	119	120	121	122	123	124	125	126	
127	128	129	130	131	132	133	134	135	136	137	138	139	140	141	142	143	144	145	146	147	
148	149	150	151	152	153	154	155	156	157	158	159	160	161	162	163	164	165	166	167	168	
169	170	171	172	173	174	175	176	177	178	179	180	181	182	183	184	185	186	187	188	189	A
190	191	192	193	194	195	196	197	198	199	200	201	202	203	204	205	206	207	208	209	210	SIDE
211	212	213	214	215	216	217	218	219	220	221	222	223	224	225	226	227	228	229	230	231	
232	233	234	235	236	237	238	239	240	241	242	243	244	245	246	247	248	249	250	251	252	
253	254	255	256	257	258	259	260	261	262	263	264	265	266	267	268	269	270	271	272	273	
274	275	276	277	278	279	280	281	282	283	284	285	286	287	288	289	290	291	292	293	294	
295	296	297	298	299	300	301	302	303	304	305	306	307	308	309	310	311	312	-	-	-	
313	314	315	316	317	318	319	320	321	322	323	324	325	326	327	328	329	330	331	332	333	
-	-	-	-	-	-	-	-	-	-	-	-	-	-	-	-	-	-	667	668	669	
670	671	672	673	674	675	676	677	678	679	680	681	682	683	684	685	686	687	688	689	690	
691	692	693	694	695	696	697	698	699	700	701	702	703	704	705	706	707	708	709	710	711	
712	713	714	715	716	-	-	-	-	997	992	993	994	995	996	997	998	999	1000	1001	1002	
1003	1004	1005	1006	1007	1008	1009	1010	1011	1012	1013	1014	1015	1016	1017	1018	1019	1020	1021	1022	1023	
334	335	336	337	338	339	340	341	342	343	344	345	346	347	348	349	350	351	352	353	354	
355	356	357	358	359	360	361	362	363	364	365	366	367	368	369	370	371	372	373	374	375	
376	377	378	379	380	381	382	383	384	385	386	387	388	389	390	391	392	393	394	395	396	
397	398	399	400	401	402	403	404	405	406	407	408	409	410	411	412	413	414	415	416	417	
418	419	420	421	422	423	424	425	426	427	428	429	430	431	432	433	434	435	436	437	438	
439	440	441	442	443	444	445	446	447	448	449	450	451	452	453	454	455	456	457	458	459	
460	461	462	463	464	465	466	467	468	469	470	471	472	473	474	475	476	477	478	479	480	
481	482	483	484	485	486	487	488	489	490	491	492	493	494	495	496	497	498	499	500	501	
502	503	504	505	506	507	508	509	510	511	512	513	514	515	516	517	518	519	520	521	522	B
523	524	525	526	527	528	529	530	531	532	533	534	535	536	537	538	539	540	541	542	543	SIDE
544	545	546	547	548	549	550	551	552	553	554	555	556	557	558	559	560	561	562	563	564	
565	566	567	568	569	570	571	572	573	574	575	576	577	578	579	580	581	582	583	584	585	
586	587	588	589	590	591	592	593	594	595	596	597	598	599	600	601	602	603	604	605	606	
607	608	609	610	611	612	613	614	615	616	617	618	619	620	621	622	623	624	625	626	627	
628	629	630	631	632	633	634	635	636	637	638	639	640	641	642	643	644	645	646	647	648	
649	650	651	652	653	654	655	656	657	658	659	660	661	662	663	664	655	656	657	658	659	
-	-	-	-	-	-	-	-	720	721	722	723	724	725	726	727	728	729	730	731	732	
733	734	735	736	737	738	739	740	741	742	743	744	745	746	747	748	749	750	751	752	753	
754	755	756	757	758	759	760	761	762	763	764	765	766	767	768	769	770	771	772	773	774	
775	776	777	778	779	780	781	782	783	784	785	786	787	788	789	790	791	792	793	794	795	
796	797	798	799																		

2.6 Trunking and Grade of Service

Cellular radio systems rely on *trunking* to accommodate a large number of users in a limited radio spectrum. The concept of trunking allows a large number of users to share the relatively small number of channels in a cell by providing access to each user, on demand, from a pool of available channels. In a trunked radio system, each user is allocated a channel on a per call basis, and upon termination of the call, the previously occupied channel is immediately returned to the pool of available channels.

Trunking exploits the statistical behavior of users so that a fixed number of channels or circuits may accommodate a large, random user community. The telephone company uses trunking theory to determine the number of telephone

possible quality while occupying the least amount of radio spectrum, new advances in digital signal processing continue to bring about new forms of modulation and demodulation. This chapter describes many practical modulation schemes, receiver architectures, design trade-offs, and their performance under various types of channel impairments.

5.1 Frequency Modulation vs. Amplitude Modulation

Frequency modulation (FM) is the most popular analog modulation technique used in mobile radio systems. In FM, the amplitude of the modulated carrier signal is kept constant while its frequency is varied by the modulating message signal. Thus, FM signals have all their information in the *phase* or *frequency* of the carrier. As shown subsequently, this provides a nonlinear and very rapid improvement in reception quality once a certain minimum received signal level, called the FM threshold, is achieved. In amplitude modulation (AM) schemes, there is a linear relationship between the quality of the received signal and the power of the received signal since AM signals superimpose the exact relative amplitudes of the modulating signal onto the carrier. Thus, AM signals have all their information in the *amplitude* of the carrier. FM offers many advantages over amplitude modulation (AM), which makes it a better choice for many mobile radio applications.

Frequency modulation has better noise immunity when compared to amplitude modulation. Since signals are represented as frequency variations rather than amplitude variations, FM signals are less susceptible to atmospheric and impulse noise, which tend to cause rapid fluctuations in the amplitude of the received radio signal. Also, message amplitude variations do not carry information in FM, so burst noise does not affect FM system performance as much as AM systems, provided that the FM received signal is above the FM threshold. Chapter 4 illustrated how small-scale fading can cause rapid fluctuations in the received signal, thus FM offers superior qualitative performance in fading when compared to AM. Also, in an FM system, it is possible to tradeoff bandwidth occupancy for improved noise performance. Unlike AM, in an FM system, the *modulation index*, and hence bandwidth occupancy, can be varied to obtain greater signal-to-noise performance. It can be shown that, under certain conditions, the FM signal-to-noise ratio improves 6 dB for each doubling of bandwidth occupancy. This ability of an FM system to trade bandwidth for SNR is perhaps the most important reason for its superiority over AM. However, AM signals are able to occupy less bandwidth as compared to FM signals, since the transmission system is linear. In modern AM systems, susceptibility to fading has been dramatically improved through the use of in-band pilot tones which are transmitted along with the standard AM signal. The modern AM receiver is able to monitor the pilot tone and rapidly adjust the receiver gain to compensate for the amplitude fluctuations.

Samsung Exhibit 1018, Page 25 of 71
Samsung Electronics Co., Ltd. et al. v. One-E-Way, Inc.
IPR2025-01516

An FM signal is a *constant envelope* signal, due to the fact that the envelope of the carrier does not change with changes in the modulating signal. Hence the transmitted power of an FM signal is constant regardless of the amplitude of the message signal. The constant envelope of the transmitted signal allows efficient Class C power amplifiers to be used for RF power amplification of FM. In AM, however, it is critical to maintain linearity between the applied message and the amplitude of the transmitted signal, thus linear Class A or AB amplifiers, which are not as power efficient, must be used.

The issue of amplifier efficiency is extremely important when designing portable subscriber terminals since the battery life of the portable is tied to the power amplifier efficiency. Typical efficiencies for Class C amplifiers are 70%, meaning that 70% of the applied DC power to the final amplifier circuit is converted into radiated RF power. Class A or AB amplifiers have efficiencies on the order of 30-40%. This implies that for the same battery, constant envelope FM modulation may provide twice as much talk time as AM.

Frequency modulation exhibits a so-called *capture effect* characteristic. The capture effect is a direct result of the rapid nonlinear improvement in received quality for an increase in received power. If two signals in the same frequency band are available at an FM receiver, the one appearing at the higher received signal level is accepted and demodulated, while the weaker one is rejected. This inherent ability to pick up the strongest signal and reject the rest makes FM systems very resistant to co-channel interference and provides excellent subjective received quality. In AM systems, on the other hand, all of the interferers are received at once and must be discriminated after the demodulation process.

While FM systems have many advantages over AM systems, they also have certain disadvantages. FM systems require a wider frequency band in the transmitting media (generally several times as large as that needed for AM) in order to obtain the advantages of reduced noise and capture effect. FM transmitter and receiver equipment is also more complex than that used by amplitude modulation systems. Although frequency modulation systems are tolerant to certain types of signal and circuit nonlinearities, special attention must be given to phase characteristics. Both AM and FM may be demodulated using inexpensive noncoherent detectors. AM is easily demodulated using an envelope detector whereas FM is demodulated using a discriminator or slope detector. AM may be detected coherently with a product detector, and in such cases AM can outperform FM in weak signal conditions since FM must be received above threshold.

5.2 Amplitude Modulation

In amplitude modulation, the amplitude of a high frequency carrier signal is varied in accordance to the instantaneous amplitude of the modulating message signal. If $A_c \cos(2\pi f_c t)$ is the carrier signal and $m(t)$ is the modulating message signal, the AM signal can be represented as

the same RF bandwidth. Since AM detectors have a linear detection gain, it follows that $(SNR)_{out}$ for FM is much greater than $(SNR)_{out}$ for AM.

Equation (5.35) shows the SNR at the output of an FM detector increases as the cube of the bandwidth of the message. This clearly illustrates why FM offers excellent performance for fading signals. As long as $(SNR)_{in}$ remains above threshold, $(SNR)_{out}$ is much greater than $(SNR)_{in}$. A technique called *threshold extension* is used in FM demodulators to improve detection sensitivity to about $(SNR)_{in} = 6$ dB.

FM can improve receiver performance through adjustment of the modulation index at the transmitter, and not the transmitted power. This is not the case in AM, since linear modulation techniques do not trade bandwidth for SNR.

Example 5.5

How much bandwidth is required for an analog frequency modulated signal that has an audio bandwidth of 5 kHz and a modulation index of 3? How much output SNR improvement would be obtained if the modulation index is increased to 5? What is the trade-off bandwidth for this improvement?

Solution to Example 5.5

From Carson's rue the bandwidth is

$$B_T = 2(\beta_f + 1) f_m = 2(3+1)\,5 \text{ kHz} = 40 \text{ kHz}$$

From equation (5.35) the output SNR improvement factor is approximately $3\beta_f^3 + 3\beta_f^2$.

Therefore

for $\beta_f = 3$, the output SNR factor is $\approx 3(3)^3 + 3(3)^2 = 108 = 20.33$ dB

for $\beta_f = 5$, the output SNR factor is $\approx 3(5)^3 + 3(5)^2 = 450 = 26.53$ dB

The improvement in output SNR by increasing the modulation index from 3 to 5 is therefore $26.53 - 20.33 = 6.2$ dB

This improvement is achieved at the expense of bandwidth. For $\beta_f = 3$, a bandwidth of 40 kHz is needed, while $\beta_f = 5$ requires a bandwidth of 60 kHz.

5.4 Digital Modulation — an Overview

Modern mobile communication systems use digital modulation techniques. Advancements in very large-scale integration (VLSI) and digital signal processing (DSP) technology have made digital modulation more cost effective than analog transmission systems. Digital modulation offers many advantages over analog modulation. Some advantages include greater noise immunity and robustness to channel impairments, easier multiplexing of various forms of information (e.g., voice, data, and video), and greater security. Furthermore, digital transmissions accommodate digital error-control codes which detect and/or correct transmission errors, and support complex signal conditioning and processing techniques such as source coding, encryption, and equalization to

Samsung Exhibit 1018, Page 27 of 71
Samsung Electronics Co., Ltd. et al. v. One-E-Way, Inc.
IPR2025-01516

improve the performance of the overall communication link. New multipurpose programmable digital signal processors have made it possible to implement digital modulators and demodulators completely in software. Instead of having a particular modem design permanently frozen as hardware, embedded software implementations now allow alterations and improvements without having to redesign or replace the modem.

In digital wireless communication systems, the modulating signal (e.g., the message) may be represented as a time sequence of symbols or pulses, where each symbol has m finite states. Each symbol represents n bits of information, where $n = \log_2 m$ bits/symbol. Many digital modulation schemes are used in modern wireless communication systems, and many more are sure to be introduced. Some of these techniques have subtle differences between one another, and each technique belongs to a family of related modulation methods. For example, phase shift keying (PSK) may be either coherently or differentially detected; and may have two, four, eight or more possible levels (e.g., $n = 1, 2, 3$, or more bits) per symbol, depending on the manner in which information is transmitted within a single symbol.

5.4.1 Factors That Influence the Choice of Digital Modulation

Several factors influence the choice of a digital modulation scheme. A desirable modulation scheme provides low bit error rates at low received signal-to-noise ratios, performs well in multipath and fading conditions, occupies a minimum of bandwidth, and is easy and cost-effective to implement. Existing modulation schemes do not simultaneously satisfy all of these requirements. Some modulation schemes are better in terms of the bit error rate performance, while others are better in terms of bandwidth efficiency. Depending on the demands of the particular application, trade-offs are made when selecting a digital modulation.

The performance of a modulation scheme is often measured in terms of its *power efficiency* and *bandwidth efficiency*. Power efficiency describes the ability of a modulation technique to preserve the fidelity of the digital message at low power levels. In a digital communication system, in order to increase noise immunity, it is necessary to increase the signal power. However, the amount by which the signal power should be increased to obtain a certain level of fidelity (i.e., an acceptable bit error probability) depends on the particular type of modulation employed. The *power efficiency*, η_p (sometimes called energy efficiency) of a digital modulation scheme is a measure of how favorably this tradeoff between fidelity and signal power is made, and is often expressed as the ratio of the *signal energy per bit* to *noise power spectral density* (E_b/N_0) required at the receiver input for a certain probability of error (say 10^{-5}).

Bandwidth efficiency describes the ability of a modulation scheme to accommodate data within a limited bandwidth. In general, increasing the data rate

implies decreasing the pulse width of a digital symbol, which increases the bandwidth of the signal. Thus, there is an unavoidable relationship between data rate and bandwidth occupancy. However, some modulation schemes perform better than the others in making this tradeoff. Bandwidth efficiency reflects how efficiently the allocated bandwidth is utilized and is defined as the ratio of the *throughput data rate per Hertz* in a given bandwidth. If R is the data rate in bits per second, and B is the bandwidth occupied by the modulated RF signal, then bandwidth efficiency η_B is expressed as

$$\eta_B = \frac{R}{B} \text{ bps/Hz} \tag{5.36}$$

The system capacity of a digital mobile communication system is directly related to the bandwidth efficiency of the modulation scheme, since a modulation with a greater value of η_B will transmit more data in a given spectrum allocation.

There is a fundamental upper bound on achievable bandwidth efficiency. Shannon's channel coding theorem states that for an arbitrarily small probability of error, the maximum possible bandwidth efficiency is limited by the noise in the channel, and is given by the channel capacity formula [Sha48]

$$\eta_{Bmax} = \frac{C}{B} = \log_2\left(1 + \frac{S}{N}\right) \tag{5.37}$$

where C is the channel capacity (in bps), B is the RF bandwidth, and S/N is the signal-to-noise ratio.

In the design of a digital communication system, very often there is a tradeoff between bandwidth efficiency and power efficiency. For example, as shown in Chapter 6, adding error control coding to a message increases the bandwidth occupancy (and this, in turn, reduces the bandwidth efficiency), but at the same time reduces the required received power for a particular bit error rate, and hence trades bandwidth efficiency for power efficiency. On the other hand, higher level modulation schemes (M-ary keying) decrease bandwidth occupancy but increase the required received power, and hence trade power efficiency for bandwidth efficiency.

While power and bandwidth efficiency considerations are very important, other factors also affect the choice of a digital modulation scheme. For example, for all personal communication systems which serve a large user community, the cost and complexity of the subscriber receiver must be minimized, and a modulation which is simple to detect is most attractive. The performance of the modulation scheme under various types of channel impairments such as Rayleigh and Rician fading and multipath time dispersion, given a particular demodulator implementation, is another key factor in selecting a modulation. In cellular systems where interference is a major issue, the performance of a modulation scheme in an interference environment is extremely important. Sensitivity to

Samsung Exhibit 1018, Page 29 of 71
Samsung Electronics Co., Ltd. et al. v. One-E-Way, Inc.
IPR2025-01516

detection of timing jitter, caused by time-varying channels, is also an important consideration in choosing a particular modulation scheme. In general, the modulation, interference, and implementation of the time-varying effects of the channel as well as the performance of the specific demodulator are analyzed as a complete system using simulation to determine relative performance and ultimate selection.

Example 5.6

If the SNR of a wireless communication link is 20 dB and the RF bandwidth is 30 kHz, determine the maximum theoretical data rate that can be transmitted. Compare this rate to the U.S. Digital Cellular Standard described in Chapter 1.

Solution to Example 5.6

Given:

$S/N = 20 \text{ dB} = 100$

RF Bandwidth $B = 30000$ Hz

Using Shannon's channel capacity formula (5.37), the maximum possible data rate

$$C = B\log_2\left(1 + \frac{S}{N}\right) = 30000\log_2(1 + 100) = 199.75 \text{ kbps}$$

The USDC data rate is 48.6 kbps, which is only about one fourth the theoretical limit under 20 dB SNR conditions.

Example 5.7

What is the theoretical maximum data rate that can be supported in a 200 kHz channel for $SNR = 10$ dB, 30 dB. How does this compare to the GSM standard described in Chapter 1?

Solution to Example 5.7

For $SNR = 10 \text{ dB} = 10$, $B = 200$ kHz.

Using Shannon's channel capacity formula (5.37), the maximum possible data rate

$$C = B\log_2\left(1 + \frac{S}{N}\right) = 200000\log_2(1 + 10) = 691.886 \text{ kbps}$$

The GSM data rate is 270.833 kbps, which is only about 40% of the theoretical limit for 10 dB SNR conditions.

For $SNR = 30 \text{ dB} = 1000$, $B = 200$ kHz.

The maximum possible data rate

$$C = B\log_2\left(1 + \frac{S}{N}\right) = 200000\log_2(1 + 1000) = 1.99 \text{ Mbps.}$$

locked loop (PLL). If no pilot carrier is transmitted, a Costas loop or squaring loop may be used to synthesize the carrier phase and frequency from the received BPSK signal. Figure 5.23 shows the block diagram of a BPSK receiver along with the carrier recovery circuits.

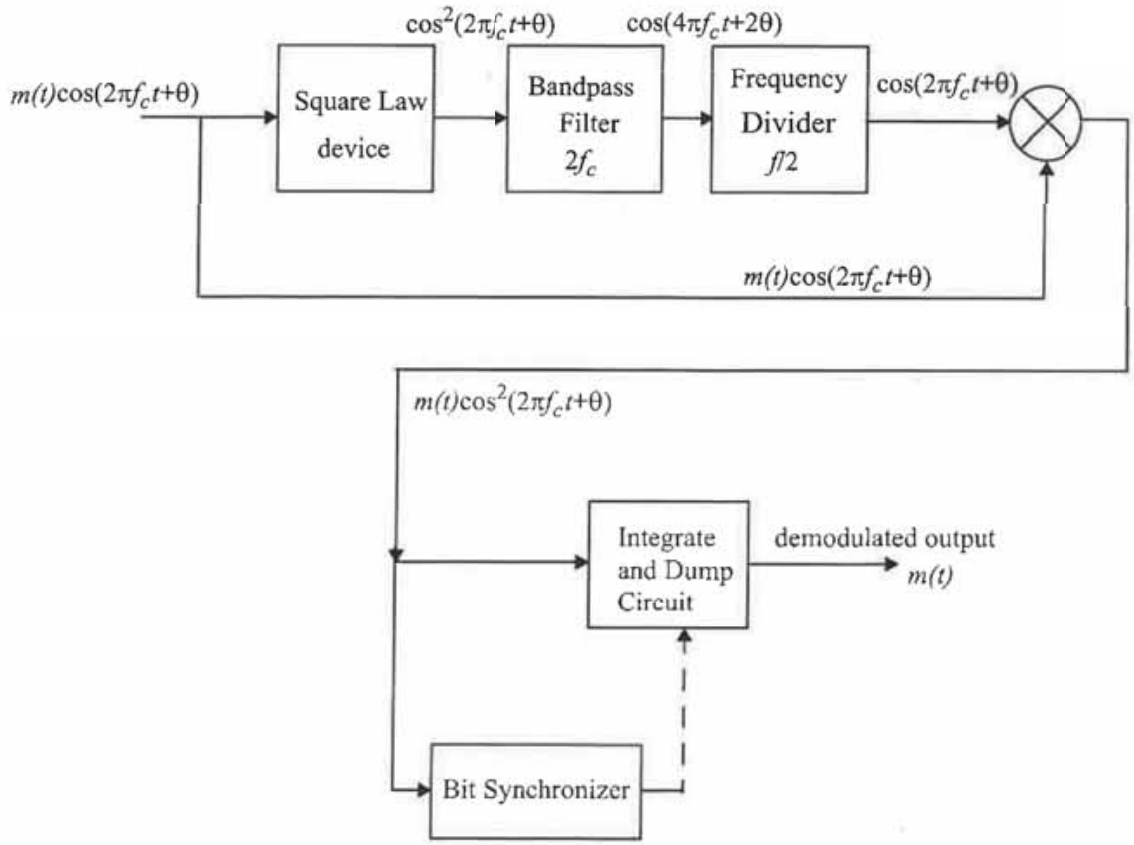

Figure 5.23
BPSK receiver with carrier recovery circuits.

The received signal $\cos(2\pi f_c t + \theta)$ is squared to generate a dc signal and an amplitude varying sinusoid at twice the carrier frequency. The dc signal is filtered out using a bandpass filter with center frequency tuned to $2f_c$. A frequency divider is then used to recreate the waveform $\cos(2\pi f_c t + \theta)$. The output of the multiplier after the frequency divider is given by

$$m(t)\sqrt{\frac{2E_b}{T_b}}\cos^2(2\pi f_c t + \theta) = m(t)\sqrt{\frac{2E_b}{T_b}}\left[\frac{1}{2} + \frac{1}{2}\cos 2(2\pi f_c t + \theta)\right] \tag{5.73}$$

This signal is applied to an integrate and dump circuit which forms the low pass filter segment of a BPSK detector. If the transmitter and receiver pulse shapes are matched, then the detection will be optimum. A bit synchronizer is used to facilitate sampling of the integrator output precisely at the end of each

bit period. At the end of each bit period, the switch at the output of the integrator closes to dump the output signal to the decision circuit. Depending on whether the integrator output is above or below a certain threshold, the decision circuit decides that the received signal corresponds to a binary 1 or 0. The threshold is set at an optimum level such that the probability of error is minimized. If it is equally likely that a binary 1 or 0 is transmitted, then the voltage level corresponding to the midpoint between the detector output voltage levels of binary 1 and 0 is used as the optimum threshold.

As seen in Section 5.6, the probability of bit error for *many* modulation schemes in an AWGN channel is found using the Q-function of the distance between the signal points. From the constellation diagram of a BPSK signal shown in Figure 5.21, it can be seen that the distance between adjacent points in the constellation is $2\sqrt{E_b}$. Substituting this in equation (5.62), the probability of bit error is obtained as

$$P_{e,\,\mathrm{BPSK}} = Q\left(\sqrt{\frac{2E_b}{N_0}}\right) \tag{5.74}$$

5.7.2 Differential Phase Shift Keying (DPSK)

Differential PSK is a noncoherent form of phase shift keying which avoids the need for a coherent reference signal at the receiver. Noncoherent receivers are easy and cheap to build, and hence are widely used in wireless communications. In DPSK systems, the input binary sequence is first differentially encoded and then modulated using a BPSK modulator. The differentially encoded sequence $\{d_k\}$ is generated from the input binary sequence $\{m_k\}$ by complementing the modulo-2 sum of m_k and d_{k-1}. The effect is to leave the symbol d_k unchanged from the previous symbol if the incoming binary symbol m_k is 1, and to toggle d_k if m_k is 0. Table 5.1 illustrates the generation of a DPSK signal for a sample sequence m_k which follows the relationship $d_k = \overline{m_k \oplus d_{k-1}}$.

Table 5.1 Illustration of the Differential Encoding Process

$\{m_k\}$		1	0	0	1	0	1	1	0
$\{d_{k-1}\}$		1	1	0	1	1	0	0	0
$\{d_k\}$	1	1	0	1	1	0	0	0	1

A block diagram of a DPSK transmitter is shown in Figure 5.24. It consists of a one bit delay element and a logic circuit interconnected so as to generate the differentially encoded sequence from the input binary sequence. The output is passed through a product modulator to obtain the DPSK signal. At the receiver, the original sequence is recovered from the demodulated differentially encoded signal through a complementary process, as shown in Figure 5.25.

Samsung Exhibit 1018, Page 32 of 71
Samsung Electronics Co., Ltd. et al. v. One-E-Way, Inc.
IPR2025-01516

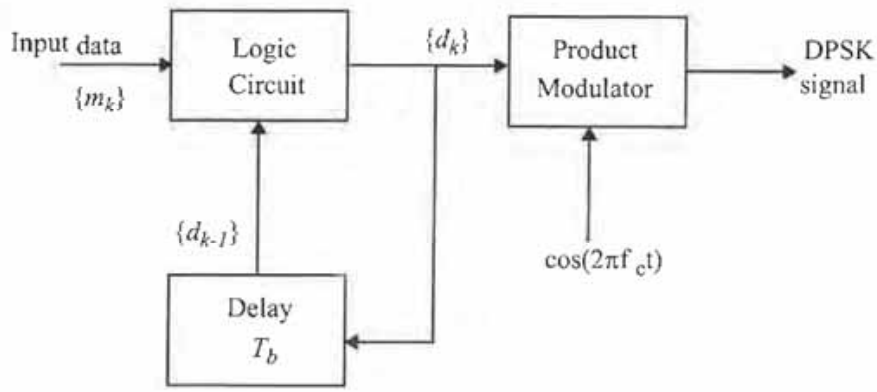

Figure 5.24
Block diagram of a DPSK transmitter.

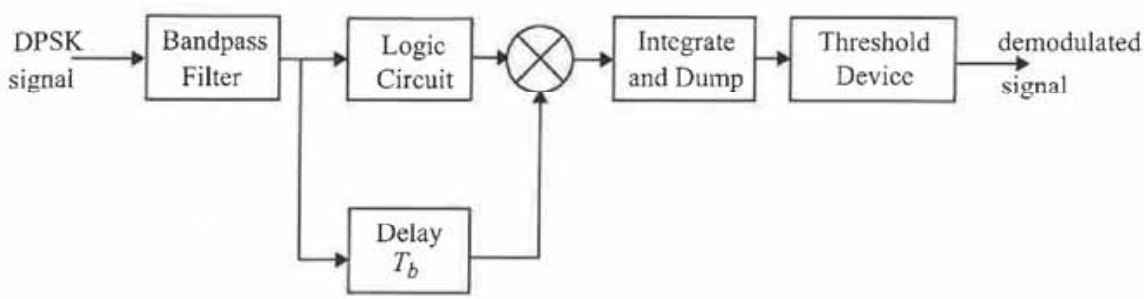

Figure 5.25
Block diagram of DPSK receiver.

While DPSK signaling has the advantage of reduced receiver complexity, its energy efficiency is inferior to that of coherent PSK by about 3 dB. The average probability of error for DPSK in additive white Gaussian noise is given by

$$P_{e,\,\mathrm{DPSK}} = \frac{1}{2}\exp\left(-\frac{E_b}{N_0}\right) \tag{5.75}$$

5.7.3 Quadrature Phase Shift Keying (QPSK)

Quadrature phase shift keying (QPSK) has twice the bandwidth efficiency of BPSK, since 2 bits are transmitted in a single modulation symbol. The phase of the carrier takes on 1 of 4 equally spaced values, such as 0, $\pi/2$, π, and $3\pi/2$, where each value of phase corresponds to a unique pair of message bits. The QPSK signal for this set of symbol states may be defined as

$$S_{\mathrm{QPSK}}(t) = \sqrt{\frac{2E_s}{T_s}}\cos\left[2\pi f_c t + (i-1)\frac{\pi}{2}\right] \quad 0 \le t \le T_s \quad i = 1, 2, 3, 4. \tag{5.76}$$

where T_s is the symbol duration and is equal to twice the bit period.

$\theta_1 = \theta_0 + \phi_1 = -3\pi/4$ from Table 5.2.

This implies I_1, Q_1 are $(-0.707, -0.707)$ from (5.81) and (5.82). The second two bits are 1 0, which maps from Table 5.2 into $\phi_2 = -\pi/4$. Thus from equation (5.83), θ_2 becomes $-\pi$, and I_2, Q_2 are (-1, 0) from equation (5.81). The bits 1 1 induce $\phi_3 = \pi/4$ and thus $\theta_3 = -3\pi/4$. Thus, I_3, Q_3 are $(-0.707, -0.707)$.

From the above discussion it is clear that the information in a $\pi/4$ QPSK signal is completely contained in the phase difference ϕ_k of the carrier between two adjacent symbols. Since the information is completely contained in the phase difference, it is possible to use noncoherent differential detection even in the absence of differential encoding.

5.7.8 $\pi/4$ QPSK Detection Techniques

Due to ease of hardware implementation, differential detection is often employed to demodulate $\pi/4$ QPSK signals. In an AWGN channel, the BER performance of a differentially detected $\pi/4$ QPSK is about 3 dB inferior to QPSK, while coherently detected $\pi/4$ QPSK has the same error performance as QPSK. In low bit rate, fast Rayleigh fading channels, differential detection offers a lower error floor since it does not rely on phase synchronization [Feh91]. There are various types of detection techniques that are used for the detection of $\pi/4$ QPSK signals. They include *baseband differential detection*, IF *differential detection*, and FM *discriminator detection*. While both the baseband and IF differential detector determine the cosine and sine functions of the phase difference, and then decide on the phase difference accordingly, the FM discriminator detects the phase difference directly in a noncoherent manner. Interestingly, simulations have shown that all 3 receiver structures offer very similar bit error rate performances, although there are implementation issues which are specific to each technique [Anv91].

Baseband Differential Detection

Figure 5.33 shows a block diagram of a baseband differential detector. The incoming $\pi/4$ QPSK signal is quadrature demodulated using two local oscillator signals that have the same frequency as the unmodulated carrier at the transmitter, but not necessarily the same phase. If $\phi_k = \tan^{-1}(Q_k/I_k)$ is the phase of the carrier due to the k th data bit, the output w_k and z_k from the two low pass filters in the in-phase and quadrature arms of the demodulator can be expressed as

$$w_k = \cos(\phi_k - \gamma) \tag{5.87}$$

$$z_k = \sin(\phi_k - \gamma) \tag{5.88}$$

Samsung Exhibit 1018, Page 34 of 71
Samsung Electronics Co., Ltd. et al. v. One-E-Way, Inc.
IPR2025-01516

$$\text{RF } BW = 0.57R_b = 0.57 \times 270 \times 10^3 = 153.9 \text{ kHz}$$

5.9 Combined Linear and Constant Envelope Modulation Techniques

Modern modulation techniques exploit the fact that digital baseband data may be sent by varying both the envelope and phase (or frequency) of an RF carrier. Because the envelope and phase offer two degrees of freedom, such modulation techniques map baseband data into four or more possible RF carrier signals. Such modulation techniques are called M-ary modulation, since they can represent more signals than if just the amplitude or phase were varied alone.

In an M-ary signaling scheme, two or more bits are grouped together to form symbols and one of M possible signals, $s_1(t)$, $s_2(t)$, ..., $s_M(t)$ is transmitted during each symbol period of duration T_s. Usually, the number of possible signals is $M = 2^n$, where n is an integer. Depending on whether the amplitude, phase, or frequency of the carrier is varied, the modulation scheme is called M-ary ASK, M-ary PSK, or M-ary FSK. Modulations which alter both the amplitude and phase of the carrier are the subject of active research.

M-ary signaling is particularly attractive for use in bandlimited channels, but are limited in their applications due to sensitivity to timing jitter (i.e., timing errors increase when smaller distances between signals in the constellation diagram are used. This results in poorer error performance).

M-ary modulation schemes achieve better bandwidth efficiency at the expense of power efficiency. For example, an 8-PSK system requires a bandwidth that is $\log_2 8 = 3$ times smaller than a BPSK system, whereas its BER performance is significantly worse than BPSK since signals are packed more closely in the signal constellation.

5.9.1 M-ary Phase Shift Keying (MPSK)

In M-ary PSK, the carrier phase takes on one of M possible values, namely, $\theta_i = 2(i-1)\pi/M$, where $i = 1, 2, ..., M$. The modulated waveform can be expressed as

$$S_i(t) = \sqrt{\frac{2E_s}{T_s}} \cos\left(2\pi f_c t + \frac{2\pi}{M}(i-1)\right), \; 0 \le t \le T_s \quad i = 1, 2, ..., M \tag{5.112}$$

where $E_s = (\log_2 M)E_b$ is the energy per symbol and $T_s = (\log_2 M)T_b$ is the symbol period. The above equation can be rewritten in quadrature form as

$$S_i(t) = \sqrt{\frac{2E_s}{T_s}} \cos\left[(i-1)\frac{2\pi}{M}\right] \cos(2\pi f_c t) \qquad i = 1, 2, ..., M \tag{5.113}$$
$$- \sqrt{\frac{2E_s}{T_s}} \sin\left[(i-1)\frac{2\pi}{M}\right] \sin(2\pi f_c t)$$

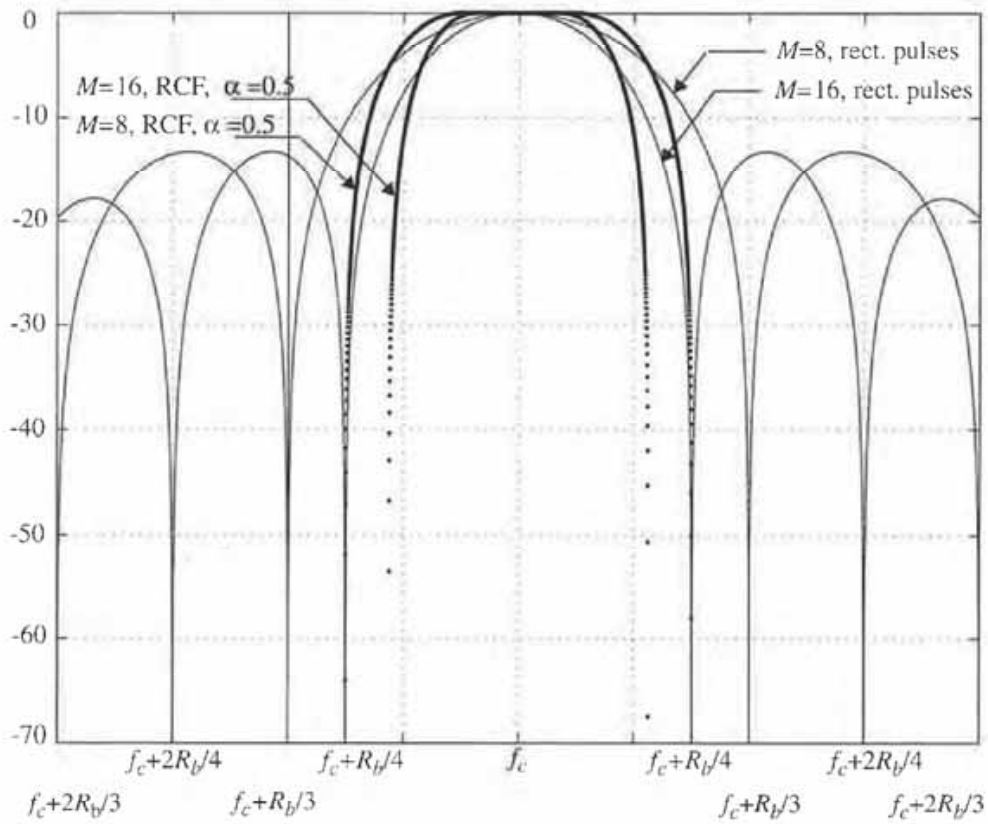

Figure 5.46
M-ary PSK power spectral density, for M=8, 16, (PSD for both rectangular and raised cosine filtered pulses are shown for fixed R_b).

5.9.2 M-ary Quadrature Amplitude Modulation (QAM)

In M-ary PSK modulation, the amplitude of the transmitted signal was constrained to remain constant, thereby yielding a circular constellation. By allowing the amplitude to also vary with the phase, a new modulation scheme called *quadrature amplitude modulation* (QAM) is obtained. Figure 5.47 shows the constellation diagram of 16-ary QAM. The constellation consists of a square lattice of signal points. The general form of an M-ary QAM signal can be defined as

$$S_i(t) = \sqrt{\frac{2E_{min}}{T_s}} a_i \cos(2\pi f_c t) + \sqrt{\frac{2E_{min}}{T_s}} b_i \sin(2\pi f_c t) \tag{5.120}$$

$$0 \le t \le T \qquad i = 1, 2, ..., M$$

where E_{min} is the energy of the signal with the lowest amplitude, and a_i and b_i are a pair of independent integers chosen according to the location of the particular signal point. Note that M-ary QAM does not have constant energy per sym-

bol, nor does it have constant distance between possible symbol states. It reasons that particular values of $S_i(t)$ will be detected with higher probability than others.

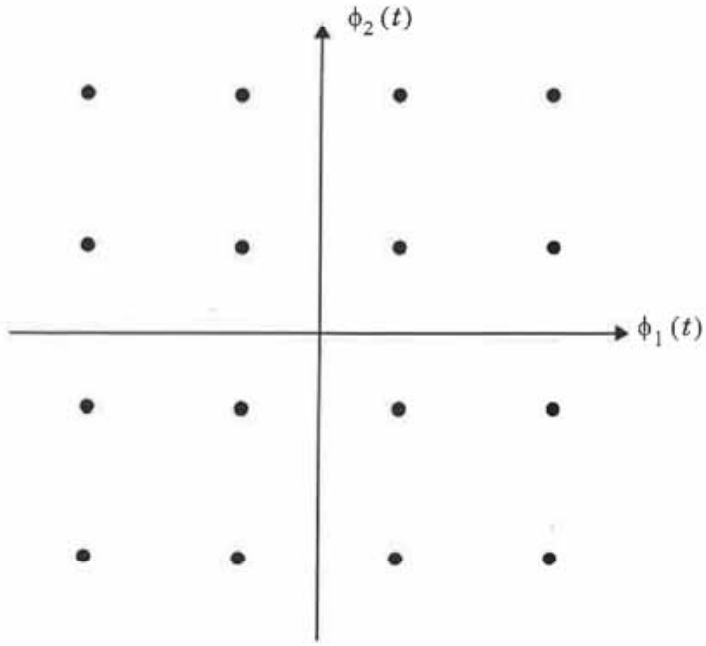

Figure 5.47
Constellation diagram of an M-ary QAM (M=16) signal set.

If rectangular pulse shapes are assumed, the signal $S_i(t)$ may be expanded in terms of a pair of basis functions defined as

$$\phi_1(t) = \sqrt{\frac{2}{T_s}}\cos(2\pi f_c t) \quad 0 \le t \le T_s \tag{5.121}$$

$$\phi_2(t) = \sqrt{\frac{2}{T_s}}\sin(2\pi f_c t) \quad 0 \le t \le T_s \tag{5.122}$$

The coordinates of the i th message point are $a_i\sqrt{E_{min}}$ and $b_i\sqrt{E_{min}}$ where (a_i, b_i) is an element of the L by L matrix given by

$$\{a_i, b_i\} = \begin{bmatrix} (-L+1, L-1) & (-L+3, L-1) & .... & (L-1, L-1) \\ (-L+1, L-3) & (-L+3, L-3) & .... & (L-1, L-3) \\ . & . & . & . \\ . & . & . & . \\ (-L+1, -L+1) & (-L+3, -L+1) & .... & (L-1, -L+1) \end{bmatrix} \tag{5.123}$$

where $L = \sqrt{M}$. For example, for a 16-QAM with signal constellation as shown in Figure 5.47, the L by L matrix is

$$\{a_i, b_i\} = \begin{bmatrix} (-3,3) & (-1,3) & (1,3) & (3,3) \\ (-3,1) & (-1,1) & (1,1) & (3,1) \\ (-3,-1) & (-1,-1) & (1,-1) & (3,-1) \\ (-3,-3) & (-1,-3) & (1,-3) & (3,-3) \end{bmatrix} \tag{5.124}$$

It can be shown that the average probability of error in an AWGN channel for M-ary QAM, using coherent detection, can be approximated by [Hay94]

$$P_e \cong 4\left(1 - \frac{1}{\sqrt{M}}\right) Q\left(\sqrt{\frac{2E_{min}}{N_0}}\right) \tag{5.125}$$

In terms of the average signal energy E_{av}, this can be expressed as [Zie92]

$$P_e \cong 4\left(1 - \frac{1}{\sqrt{M}}\right) Q\left(\sqrt{\frac{3E_{av}}{(M-1)N_0}}\right) \tag{5.126}$$

The power spectrum and bandwidth efficiency of QAM modulation is identical to M-ary PSK modulation. In terms of power efficiency, QAM is superior to M-ary PSK. Table 5.5 lists the bandwidth and power efficiencies of a QAM signal for various values of M, assuming optimum raised cosine rolloff filtering in AWGN. As with M-PSK, the table is optimistic, and actual bit error probabilities for wireless systems must be determined by simulating the various impairments of the channel and the specific receiver implementation. Pilot tones or equalization must be used for QAM in mobile systems.

Table 5.5 Bandwidth and Power Efficiency of QAM [Zie92]

M	4	16	64	256	1024	4096
η_B	1	2	3	4	5	6
E_b/N_o for BER=10^{-6}	10.5	15	18.5	24	28	33.5

5.9.3 M-ary Frequency Shift Keying (MFSK)

In M-ary FSK modulation, the transmitted signals are defined by

$$S_i(t) = \sqrt{\frac{2E_s}{T_s}} \cos\left[\frac{\pi}{T_s}(n_c + i)t\right] \quad 0 \le t \le T_s \quad i = 1, 2, \ldots, M \tag{5.127}$$

where $f_c = n_c/2T_s$ for some fixed integer n_c. The M transmitted signals are of equal energy and equal duration, and the signal frequencies are separated by $1/2T_s$ Hertz, making the signals orthogonal to one another.

For coherent M-ary FSK, the optimum receiver consists of a bank of M correlators, or matched filters. The average probability of error based on the union bound is given by [Zie92]

have uniform energy over a very large bandwidth, at any given time only a small portion of the spectrum will undergo fading (recall the comparison between wideband and narrowband signal responses in multipath channels in Chapter 4). Viewed in the time domain, the multipath resistance properties are due to the fact that the delayed versions of the transmitted PN signal will have poor correlation with the original PN sequence, and will thus appear as another uncorrelated user which is ignored by the receiver. Spread spectrum systems are not only resistant to multipath fading, but they can also exploit the multipath components to improve the performance of the system. This can be done using a RAKE receiver which combines the information obtained from several resolvable multipath components. A RAKE receiver consists of a bank of correlators, each of which correlate to a particular multipath component of the desired signal. The correlator outputs may be weighted according to their relative strengths and summed to obtain the final signal estimate [Pri58]. RAKE receivers are described in Chapter 6.

5.10.1 Pseudo-noise (PN) Sequences

A pseudo-noise (PN) or pseudorandom sequence is a binary sequence with an autocorrelation that resembles, over a period, the autocorrelation of a random binary sequence. Its autocorrelation also roughly resembles the autocorrelation of band-limited white noise. Although it is deterministic, a pseudonoise sequence has many characteristics that are similar to those of random binary sequences, such as having a nearly equal number of 0s and 1s, very low correlation between shifted versions of the sequence, very low crosscorrelation between any two sequences, etc. The PN sequence is usually generated using sequential logic circuits. A feedback shift register, which is diagrammed in Figure 5.48, consists of consecutive stages of two state memory devices and feedback logic. Binary sequences are shifted through the shift registers in response to clock pulses, and the output of the various stages are logically combined and fed back as the input to the first stage. When the feedback logic consists of exclusive-OR gates, which is usually the case, the shift register is called a linear PN sequence generator.

The initial contents of the memory stages and the feedback logic circuit determine the successive contents of the memory. If a linear shift register reaches zero state at some time, it would always remain in the zero state, and the output would subsequently be all 0's. Since there are exactly $2^m - 1$ nonzero states for an m-stage feedback shift register, the period of a PN sequence produced by a linear m-stage shift register cannot exceed $2^m - 1$ symbols. A sequence of period $2^m - 1$ generated by a linear feedback register is called a *maximal length* (ML) sequence. An excellent treatment of PN codes is given in [Coo86b].

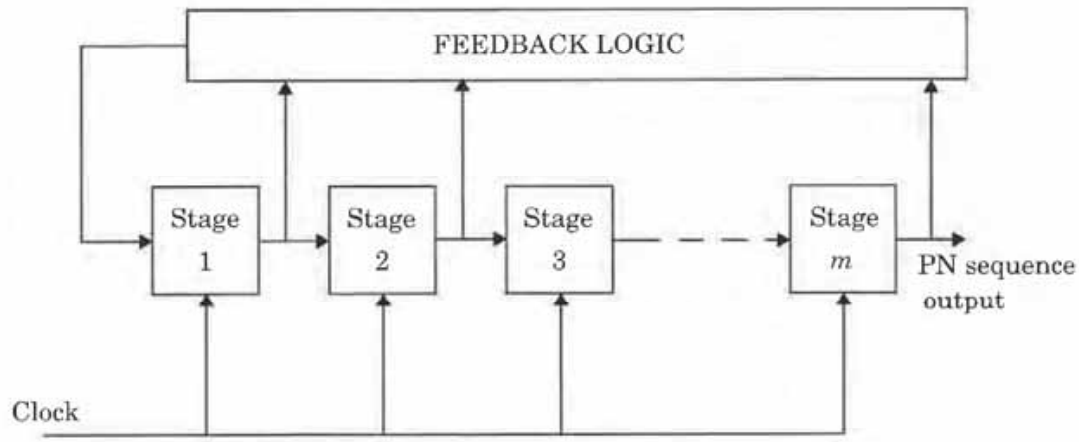

Figure 5.48
Block diagram of a generalized feedback shift register with m stages.

5.10.2 Direct Sequence Spread Spectrum (DS-SS)

A *direct sequence spread spectrum* (DS-SS) system spreads the baseband data by directly multiplying the baseband data pulses with a pseudo-noise sequence that is produced by a pseudo-noise code generator. A single pulse or symbol of the PN waveform is called a *chip*. Figure 5.49 shows a functional block diagram of a DS system with binary phase modulation. This system is one of the most widely used direct sequence implementations. Synchronized data symbols, which may be information bits or binary channel code symbols, are added in modulo-2 fashion to the chips before being phase modulated. A coherent or differentially coherent phase-shift keying (PSK) demodulation may be used in the receiver.

The received spread spectrum signal for a single user can be represented as

$$S_{ss}(t) = \sqrt{\frac{2E_s}{T_s}} m(t)p(t)\cos(2\pi f_c t + \theta) \tag{5.133}$$

where $m(t)$ is the data sequence, $p(t)$ is the PN spreading sequence, f_c is the carrier frequency, and θ is the carrier phase angle at $t = 0$. The data waveform is a time sequence of nonoverlapping rectangular pulses, each of which has an amplitude equal to +1 or -1. Each symbol in $m(t)$ represents a data symbol and has duration T_s. Each pulse in $p(t)$ represents a chip, is usually rectangular with an amplitude equal to +1 or -1, and has a duration of T_c. The transitions of the data symbols and chips coincide such that the ratio T_s to T_c is an integer. If W_{ss} is the bandwidth of $S_{ss}(t)$ and B is the bandwidth of $m(t)\cos(2\pi f_c t)$, the spreading due to $p(t)$ gives $W_{ss} \gg B$.

Figure 5.49(b) illustrates a DS receiver. Assuming that code synchronization has been achieved at the receiver, the received signal passes through the

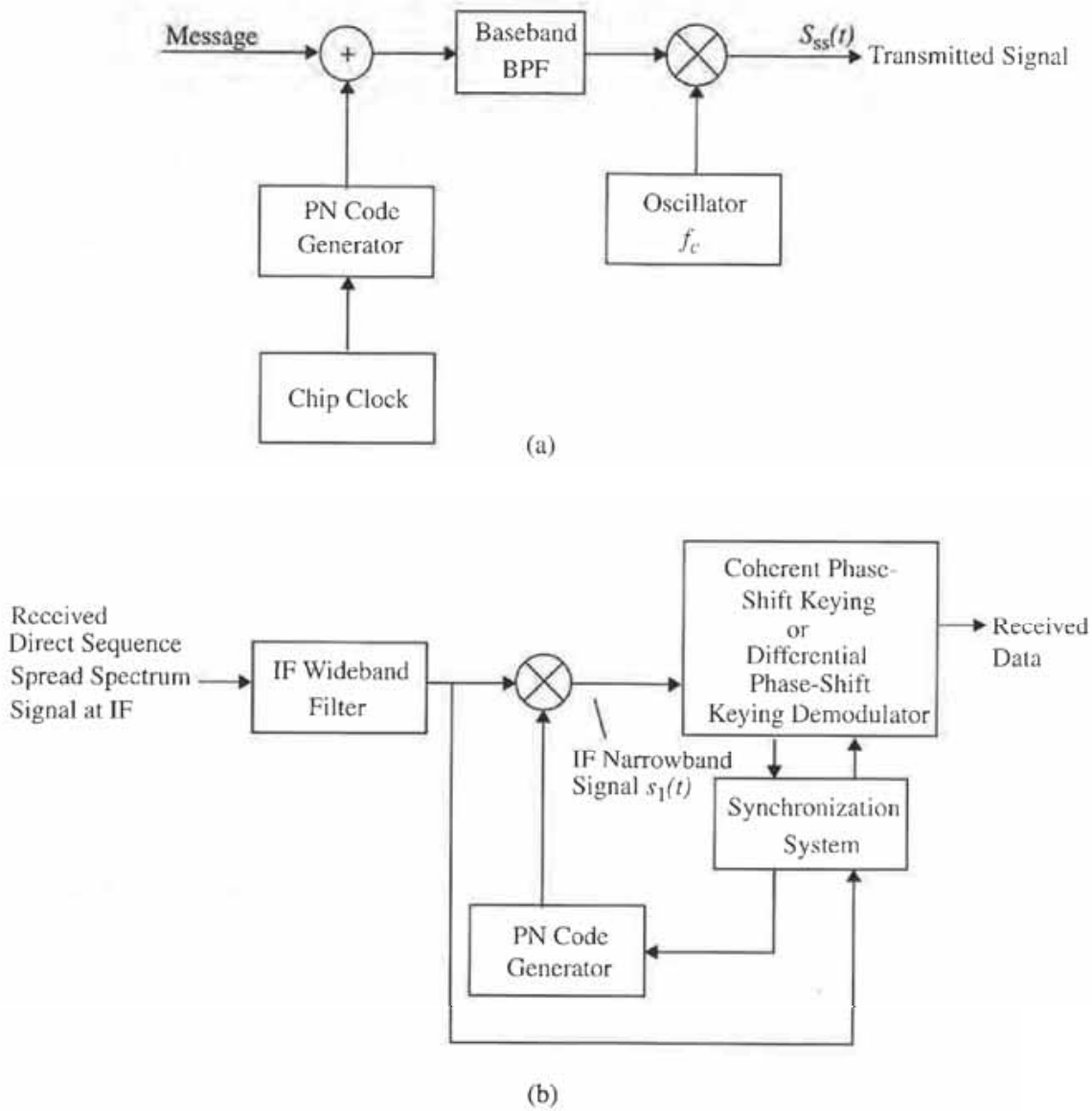

Figure 5.49
Block diagram of a DS-SS system with binary phase modulation: (a) transmitter and (b) receiver

wideband filter and is multiplied by a local replica of the PN code sequence $p(t)$. If $p(t) = \pm 1$, then $p^2(t) = 1$, and this multiplication yields the despread signal $s(t)$ given by

$$s_1(t) = \sqrt{\frac{2E_s}{T_s}} m(t) \cos(2\pi f_c t + \theta) \tag{5.134}$$

at the input of the demodulator. Because $s_1(t)$ has the form of a BPSK signal, the corresponding demodulation extracts $m(t)$.

Figure 5.50 shows the received spectra of the desired signal and the interference at the output of the receiver wideband filter. Multiplication by the

spreading waveform produces the spectra of Figure 5.50b at the demodulator input. The signal bandwidth is reduced to B, while the interference energy is spread over a bandwidth exceeding W_{ss}. The filtering action of the demodulator removes most of the interference spectrum that does not overlap with the signal spectrum. Thus, most of the original interference energy is eliminated and does not affect the receiver performance. An approximate measure of the interference rejection capability is given by the ratio W_{ss}/B, which is equal to the processing gain defined as

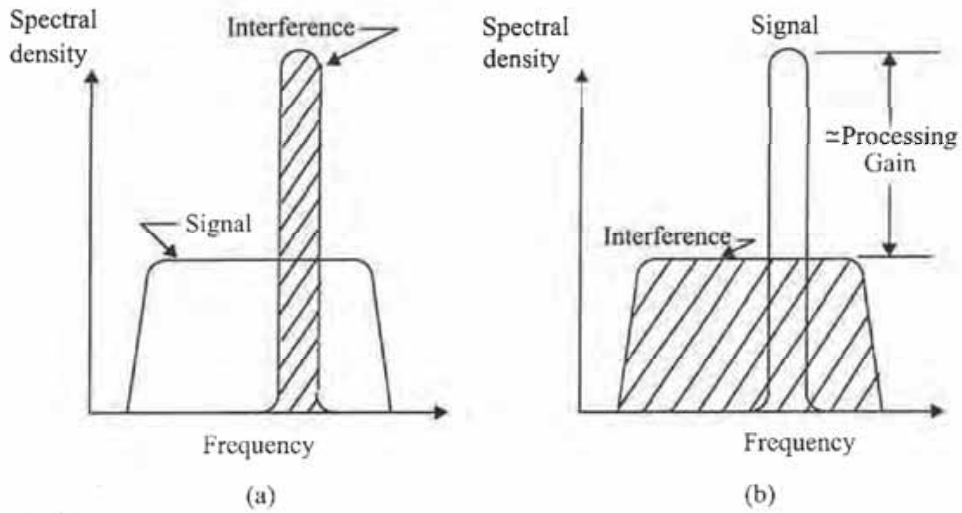

Figure 5.50
Spectra of desired received signal with interference: (a) wideband filter output and (b) correlator output after despreading.

$$PG = \frac{T_s}{T_c} = \frac{R_c}{R_s} = \frac{W_{ss}}{2R_s} \tag{5.135}$$

The greater the processing gain of the system, the greater will be its ability to suppress in-band interference.

5.10.3 Frequency Hopped Spread Spectrum (FH-SS)

Frequency hopping involves a periodic change of transmission frequency. A frequency hopping signal may be regarded as a sequence of modulated data bursts with time-varying, pseudorandom carrier frequencies. The set of possible carrier frequencies is called the *hopset*. Hopping occurs over a frequency band that includes a number of channels. Each channel is defined as a spectral region with a central frequency in the hopset and a bandwidth large enough to include most of the power in a narrowband modulation burst (usually FSK) having the corresponding carrier frequency. The bandwidth of a channel used in the hopset is called the *instantaneous bandwidth*. The bandwidth of the spectrum over

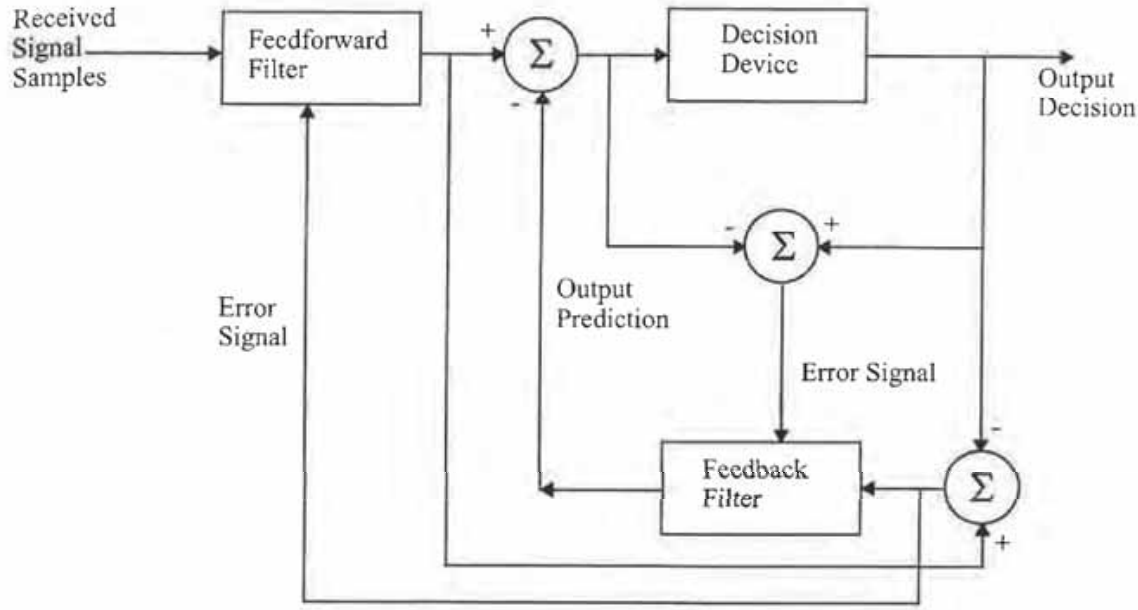

Figure 6.9
Predictive decision feedback equalizer.

6.7.2 Maximum Likelihood Sequence Estimation (MLSE) Equalizer

The MSE-based linear equalizers described previously are optimum with respect to the criterion of minimum probability of symbol error when the channel does not introduce any amplitude distortion. Yet this is precisely the condition in which an equalizer is needed for a mobile communications link. This limitation on MSE-based equalizers led researchers to investigate optimum or nearly optimum nonlinear structures. These equalizers use various forms of the classical maximum likelihood receiver structure. Using a channel impulse response simulator within the algorithm, the MLSE tests all possible data sequences (rather than decoding each received symbol by itself), and chooses the data sequence with the maximum probability as the output. An MLSE usually has a large computational requirement, especially when the delay spread of the channel is large. Using the MLSE as an equalizer was first proposed by Forney [For78] in which he set up a basic MLSE estimator structure and implemented it with the Viterbi algorithm. This algorithm, described in Section 6.15, was recognized to be a maximum likelihood sequence estimator (MLSE) of the state sequences of a finite state Markov process observed in memoryless noise. It has recently been implemented successfully for equalizers in mobile radio channels.

The MLSE can be viewed as a problem in estimating the state of a discrete-time finite state machine, which in this case happens to be the radio channel with coefficients f_k, and with a channel state which at any instant of time is estimated by the receiver based on the L most recent input samples. Thus the chan-

nel has M^L states, where M is the size of the symbol alphabet of the modulation. That is, an M^L trellis is used by the receiver to model the channel over time. The Viterbi algorithm then tracks the state of the channel by the paths through the trellis and gives at stage k a rank ordering of the M^L most probable sequences terminating in the most recent L symbols.

The block diagram of a MLSE receiver based on the DFE is shown in Figure 6.10. The MLSE is optimal in the sense that it minimizes the probability of a sequence error. The MLSE requires knowledge of the channel characteristics in order to compute the metrics for making decisions. The MLSE also requires knowledge of the statistical distribution of the noise corrupting the signal. Thus, the probability distribution of the noise determines the form of the metric for optimum demodulation of the received signal. Notice that the matched filter operates on the continuous time signal, whereas the MLSE and channel estimator rely on discretized (nonlinear) samples.

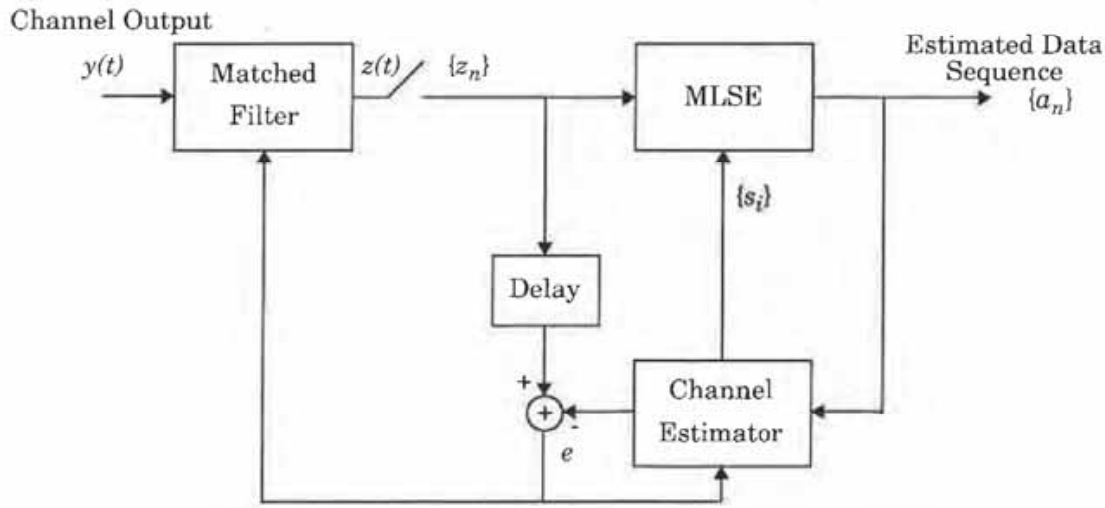

Figure 6.10
The structure of a maximum likelihood sequence estimator (MLSE) with an adaptive matched filter.

6.8 Algorithms for Adaptive Equalization

Since an adaptive equalizer compensates for an unknown and time-varying channel, it requires a specific algorithm to update the equalizer coefficients and track the channel variations. A wide range of algorithms exist to adapt the filter coefficients. The development of adaptive algorithms is a complex undertaking, and it is beyond the scope of this text to delve into great detail on how this is done. Excellent references exist which treat algorithm development [Wid85], [Hay86], [Pro91]. This section describes some practical issues regarding equalizer algorithm design, and outlines three of the basic algorithms for adaptive equalization. Though the algorithms detailed in this section are derived for the

Samsung Exhibit 1018, Page 44 of 71
Samsung Electronics Co., Ltd. et al. v. One-E-Way, Inc.
IPR2025-01516

linear, transversal equalizer, they can be extended to other equalizer structures, including nonlinear equalizers.

The performance of an algorithm is determined by various factors which include:

- **Rate of convergence** — This is defined as the number of iterations required for the algorithm, in response to stationary inputs, to converge close enough to the optimum solution. A fast rate of convergence allows the algorithm to adapt rapidly to a stationary environment of unknown statistics. Furthermore, it enables the algorithm to track statistical variations when operating in a nonstationary environment.
- **Misadjustment** — For an algorithm of interest, this parameter provides a quantitative measure of the amount by which the final value of the mean square error, averaged over an ensemble of adaptive filters, deviates from the optimal minimum mean square error.
- **Computational complexity** — This is the number of operations required to make one complete iteration of the algorithm.
- **Numerical properties** — When an algorithm is implemented numerically, inaccuracies are produced due to round-off noise and representation errors in the computer. These kinds of errors influence the stability of the algorithm.

In practice, the cost of the computing platform, the power budget, and the radio propagation characteristics dominate the choice of an equalizer structure and its algorithm. In portable radio applications, battery drain at the subscriber unit is a paramount consideration, as customer talk time needs to be maximized. Equalizers are implemented only if they can provide sufficient link improvement to justify the cost and power burden.

The radio channel characteristics and intended use of the subscriber equipment is also key. The speed of the mobile unit determines the channel fading rate and the Doppler spread, which is directly related to the coherence time of the channel (see Chapter 4). The choice of algorithm, and its corresponding rate of convergence, depends on the channel data rate and coherence time.

The maximum expected time delay spread of the channel dictates the number of taps used in the equalizer design. An equalizer can only equalize over delay intervals less than or equal to the maximum delay within the filter structure. For example, if each delay element in an equalizer (such as the ones shown in Figure 6.2 — Figure 6.8) offers a 10 microsecond delay, and 4 delay elements are used to provide a 5 tap equalizer, then the maximum delay spread that could be successfully equalized is $4 \times 10\mu s = 40\mu s$. Transmissions with multipath delay spread in excess of $40\mu s$ could not be equalized. Since the circuit complexity and processing time increases with the number of taps and delay elements, it is important to know the maximum number of delay elements before selecting an equalizer structure and its algorithm. The effects of channel fading are discussed by Proakis [Pro91], with regard to the design of the U.S. digital cellular equal-

RAKE receiver for spread spectrum CDMA, where the multipath channel provides redundancy in the transmitted message.

6.11 RAKE Receiver

In CDMA spread spectrum systems (see Chapter 5), the chip rate is typically much greater than the flat fading bandwidth of the channel. Whereas conventional modulation techniques require an equalizer to undo the intersymbol interference between adjacent symbols, CDMA spreading codes are designed to provide very low correlation between successive chips. Thus, propagation delay spread in the radio channel merely provides multiple versions of the transmitted signal at the receiver. If these multipath components are delayed in time by more than a chip duration, they appear like uncorrelated noise at a CDMA receiver, and equalization is not required.

However, since there is useful information in the multipath components, CDMA receivers may combine the time delayed versions of the original signal transmission in order to improve the signal to noise ratio at the receiver. A RAKE receiver does just this – it attempts to collect the time-shifted versions of the original signal by providing a separate correlation receiver for each of the multipath signals. The RAKE receiver, shown in Figure 6.16, is essentially a diversity receiver designed specifically for CDMA, where the diversity is provided by the fact that the multipath components are practically uncorrelated from one another when their relative propagation delays exceed a chip period.

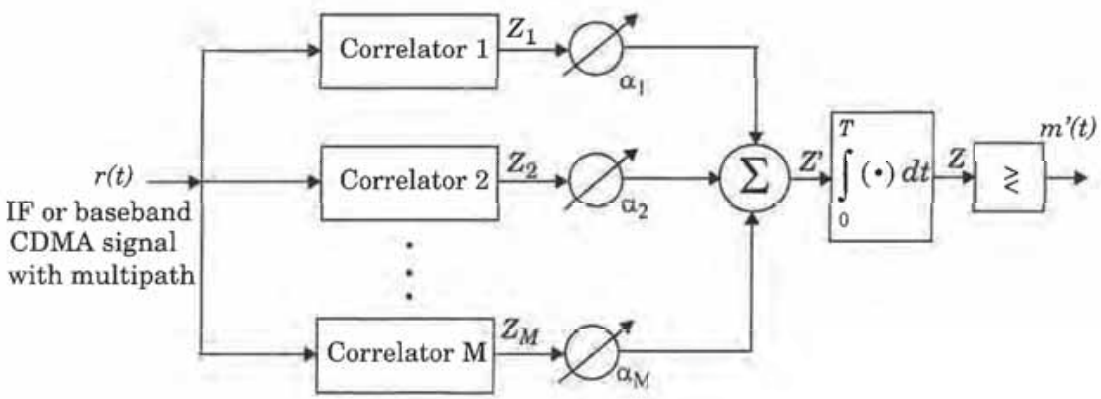

Figure 6.16
An M-branch (M-finger) RAKE receiver implementation. Each correlator detects a time shifted version of the original CDMA transmission, and each finger of the RAKE correlates to a portion of the signal which is delayed by at least one chip in time from the other fingers.

A RAKE receiver utilizes multiple correlators to separately detect the M strongest multipath components. The outputs of each correlator are weighted to provide a better estimate of the transmitted signal than is provided by a single

Samsung Exhibit 1018, Page 46 of 71
Samsung Electronics Co., Ltd. et al. v. One-E-Way, Inc.
IPR2025-01516

component. Demodulation and bit decisions are then based on the weighted outputs of the M correlators.

The basic idea of a RAKE receiver was first proposed by Price and Green [Pri58]. In outdoor environments, the delay between multipath components is usually large and, if the chip rate is properly selected, the low autocorrelation properties of a CDMA spreading sequence can assure that multipath components will appear nearly uncorrelated with each other.

Assume M correlators are used in a CDMA receiver to capture the M strongest multipath components. A weighting network is used to provide a linear combination of the correlator output for bit detection. Correlator 1 is synchronized to the strongest multipath m_1. Multipath component m_2 arrives τ_1 later than component m_1. The second correlator is synchronized to m_2. It correlates strongly with m_2 but has low correlation with m_1. Note that if only a single correlator is used in the receiver (see Figure 5.52), once the output of the single correlator is corrupted by fading, the receiver cannot correct the value. Bit decisions based on only a single correlation may produce a large bit error rate. In a RAKE receiver, if the output from one correlator is corrupted by fading, the others may not be, and the corrupted signal may be discounted through the weighting process. Decisions based on the combination of the M separate decision statistics offered by the RAKE provide a form of diversity which can overcome fading and thereby improve CDMA reception.

The M decision statistics are weighted to form an overall decision statistic as shown in Figure 6.16. The outputs of the M correlators are denoted as $Z_1, Z_2, \ldots$ and Z_M. They are weighted by $\alpha_1, \alpha_2, \ldots$ and α_M, respectively. The weighting coefficients are based on the power or the SNR from each correlator output. If the power or SNR is small out of a particular correlator, it will be assigned a small weighting factor. Just as in the case of a maximal ratio combining diversity scheme, the overall signal Z' is given by

$$Z' = \sum_{m=1}^{M} \alpha_m Z_m \tag{6.79}$$

The weighting coefficients, α_m, are normalized to the output signal power of the correlator in such a way that the coefficients sum to unity, as shown in equation (6.80).

$$\alpha_m = \frac{Z_m^2}{\sum_{m=1}^{M} Z_m^2} \tag{6.80}$$

As in the case of adaptive equalizers and diversity combining, there are many ways to generate the weighting coefficients. However, due to multiple access interference, RAKE fingers with strong multipath amplitudes will not

necessarily provide strong output after correlation. Choosing weighting coefficients based on the actual outputs of the correlators yields better RAKE performance.

6.12 Interleaving

Interleaving is used to obtain time diversity in a digital communications system without adding any overhead. Interleaving has become an extremely useful technique in all second generation digital cellular systems, due to the rapid proliferation of digital speech coders which transform analog voices into efficient digital messages that are transmitted over wireless links (speech coders are presented in Chapter 7).

Because speech coders attempt to represent a wide range of voices in a uniform and efficient digital format, the encoded data bits (called *source bits*) carry a great deal of information, and as explained in Chapters 7 and 10, some source bits are more important than others and must be protected from errors. It is typical for many speech coders to produce several "important" bits in succession, and it is the function of the interleaver to spread these bits out in time so that if there is a deep fade or noise burst, the important bits from a block of source data are not corrupted at the same time. By spreading the source bits over time, it becomes possible to make use of error control coding (called *channel coding*) which protects the source data from corruption by the channel. Since error control codes are designed to protect against channel errors that may occur randomly or in a bursty manner, interleavers scramble the time order of source bits before they are channel coded.

An interleaver can be one of two forms – a block structure or a convolutional structure. A block interleaver formats the encoded data into a rectangular array of m rows and n columns, and interleaves nm bits at a time. Usually, each row contains a word of source data having n bits. An interleaver of degree m (or depth m) consists of m rows. The structure of a block interleaver is shown in Figure 6.17. As seen, source bits are placed into the interleaver by sequentially increasing the row number for each successive bit, and filling the columns. The interleaved source data is then read out row-wise and transmitted over the channel. This has the effect of separating the original source bits by m bit periods.

At the receiver, the de-interleaver stores the received data by sequentially increasing the row number of each successive bit, and then clocks out the data row-wise, one word (row) at a time.

Convolutional interleavers can be used in place of block interleavers in much the same fashion. Convolutional interleavers are ideally suited for use with convolutional codes.

There is an inherent delay associated with an interleaver since the received message block cannot be fully decoded until all of the nm bits arrive at the receiver and are de-interleaved. In practice, human speech is tolerable to listen

Samsung Exhibit 1018, Page 48 of 71
Samsung Electronics Co., Ltd. et al. v. One-E-Way, Inc.
IPR2025-01516

Tree Diagram — The tree diagram shows the structure of the encoder in the form of a tree with the branches representing the various states and the outputs of the coder.

Trellis Diagram — Close observation of the tree reveals that the structure repeats itself once the number of stages is greater than the constraint length. It is observed that all branches emanating from two nodes having the same state are identical in the sense that they generate identical output sequences. This means that the two nodes having the same label can be merged. By doing this throughout the tree diagram, we can obtain another diagram called a Trellis diagram which is a more compact representation.

6.15.1 Decoding of Convolutional Codes

The function of the decoder is to estimate the encoded input information using a rule or method that results in the minimum possible number of errors. There is a one-to-one correspondence between the information sequence and the code sequence. Further, any information and code sequence pair is uniquely associated with a path through the trellis. Thus, the job of the convolutional decoder is to estimate the path through the trellis that was followed by the encoder.

There are a number of techniques for decoding convolutional codes. The most important of these methods is the Viterbi algorithm which performs maximum likelihood decoding of convolutional codes. The algorithm was first described by A.J. Viterbi [Vit67], [For78]. Both hard and soft decision decoding can be implemented for convolutional codes. Soft decision decoding is superior by about 2-3 dB.

6.15.1.1 The Viterbi Algorithm

The Viterbi algorithm can be described as follows:

Let the trellis node corresponding to state S_j at time i be denoted $S_{j,i}$. Each node in the trellis is to be assigned a value $V(S_{j,i})$ based on a metric. The node values are computed in the following manner.

1 Set $V(S_{0,0}) = 0$ and $i = 1$.

2 At time i, compute the partial path metrics for all paths entering each node.

3 Set $V(S_{j,i})$ equal to the smallest partial path metric entering the node corresponding to state S_j at time i. Ties can be broken by previous node choosing a path randomly. The nonsurviving branches are deleted from the trellis. In this manner, a group of minimum paths is created from $S_{0,0}$.

4 If $i < L + m$, where L is the number of input code segments (k bits for each segment) and m is the length of the longest shift register in the encoder, let $i = i + 1$ and go back to step 2.

Once all node values have been computed, start at state S_0, time $i = L + m$, and follow the surviving branches backward through the trellis. The path thus defined is unique and corresponds to the decoded output. When hard decision decoding is performed, the metric used is the Hamming distance, while the Euclidean distance is used for soft decision decoding.

6.15.1.2 Other Decoding Algorithms for Convolutional Codes

Fano's Sequential Decoding

Fano's algorithm searches for the most probable path through the trellis by examining one path at a time [Fan63]. The increment added to the metric along each branch is proportional to the probability of the received signal for that branch, as in Viterbi decoding, with the exception that an additional negative constant is added to each branch metric. The value of this constant is selected such that the metric for the correct path will increase on the average while the metric for any incorrect path will decrease on the average. By comparing the metric of a candidate path with an increasing threshold, the algorithm detects and discards incorrect paths. The error rate performance of the Fano algorithm is comparable to that of Viterbi decoding. However, in comparison to Viterbi decoding, sequential decoding has a significantly larger delay. It's advantages over Viterbi decoding is that it requires less storage, and thus codes with larger constraint lengths can be employed.

The Stack Algorithm

In contrast to the Viterbi algorithm which keeps track of $2^{(N-1)k}$ paths and their corresponding metrics, the stack algorithm deals with fewer paths and their corresponding metrics. In a stack algorithm, the more probable paths are ordered according to their metrics, with the path at the top of the stack having the largest metric. At each step of the algorithm, only the path at the top of the stack is extended by one branch. This yields 2^k successors and their metrics. These 2^k successors along with the other paths are then reordered according to the values of the metrics, and all paths with metrics that fall below some preselected amount from the metric of the top path may be discarded. Then the process of extending the path with the largest metric is repeated. In comparison with Viterbi decoding, the stack algorithm requires fewer metric calculations, but this computational savings is offset to a large extent by the computations involved in reordering the stack after every iteration. In comparison with the Fano algorithm, the stack algorithm is computationally simpler since there is no retracing over the same path, but on the other hand, the stack algorithm requires more storage than the Fano algorithm.

Feedback Decoding

Here, the decoder makes a hard decision on the information bit at stage j based on the metrics computed from stage j to stage $j+m$, where m is a preselected positive integer. Thus the decision on whether the information bit was a 1 or a 0 depends on whether the minimum Hamming distance path which begins

encoded according to some perceptual criteria for each band, and hence the quantization noise can be contained within bands and prevented from creating harmonic distortions outside the band. These schemes have the advantage that the number of bits used to encode each frequency component can be dynamically varied and shared among the different bands.

Many frequency domain coding algorithms, ranging from simple to complex are available. The most common types of frequency domain coding include *sub-band coding* (SBC) and *block transform coding*. While a sub-band coder divides the speech signal into many smaller sub-bands and encodes each sub-band separately according to some perceptual criterion, a transform coder codes the short-time transform of a windowed sequence of samples and encodes them with number of bits proportional to its perceptual significance.

7.5.1 Sub-band Coding

Sub-band coding can be thought of as a method of controlling and distributing quantization noise across the signal spectrum. Quantization is a nonlinear operation which produces distortion products that are typically broad in spectrum. The human ear does not detect the quantization distortion at all frequencies equally well. It is therefore possible to achieve substantial improvement in quality by coding the signal in narrower bands. In a sub-band coder, speech is typically divided into four or eight sub-bands by a bank of filters, and each sub-band is sampled at a bandpass Nyquist rate (which is lower than the original sampling rate) and encoded with different accuracy in accordance to a perceptual criteria. Band-splitting can be done in many ways. One approach could be to divide the entire speech band into unequal sub-bands that contribute equally to the articulation index. One partitioning of the speech band according to this method as suggested by Crochiere, et al, [Cro76] is given below.

Sub-band Number	Frequency Range
1	200-700 Hz
2	700-1310 Hz
3	1310-2020 Hz
4	2020-3200 Hz

Another way to split the speech band would be to divide it into equal width sub-bands and assign to each sub-band number of bits proportional to perceptual significance while encoding them. Instead of partitioning into equal width bands, octave band splitting is often employed. As the human ear has an exponentially decreasing sensitivity to frequency, this kind of splitting is more in tune with the perception process.

There are various methods for processing the sub-band signals. One obvious way is to make a low pass translation of the sub-band signal to zero frequency by a modulation process equivalent to single sideband modulation. This

Samsung Exhibit 1018, Page 51 of 71
Samsung Electronics Co., Ltd. et al. v. One-E-Way, Inc.
IPR2025-01516

kind of translation facilitates sampling rate reduction and possesses other benefits that accrue from coding low-pass signals. Figure 7.4 shows a simple means of achieving this low pass translation. The input signal is filtered with a bandpass filter of width w_n for the n th band. w_{1n} is the lower edge of the band and w_{2n} is the upper edge of the band. The resulting signal $s_n(t)$ is modulated by a cosine wave $\cos(w_{1n}t)$, and filtered using a low pass filter $h_n(t)$ with bandwidth $(0-w_n)$. The resulting signal $r_n(t)$ corresponds to the low pass translated version of $s_n(t)$ and can be expressed as

$$r_n(t) = [s_n(t)\cos(w_{1n}t)] \otimes h_n(t) \tag{7.10}$$

where $\otimes$ denotes a convolution operation. The signal $r_n(t)$ is sampled at a rate $2w_n$. This signal is then digitally encoded and multiplexed with encoded signals from other channels as shown in Figure 7.4. At the receiver the data is demultiplexed into separate channels, decoded, and bandpass translated to give the estimate of $r_n(t)$ for the n th channel.

The low pass translation technique is straightforward and takes advantage of a bank of nonoverlapping bandpass filters. Unfortunately, unless we use sophisticated bandpass filters, this approach will lead to perceptible aliasing effects. Estaban and Galand proposed [Est77] a scheme which avoids this inconvenience even with quasiperfect, sub-band splitting. Filter banks known as quadrature mirror filters (QMF) are used to achieve this. By designing a set of mirror filters which satisfy certain symmetry conditions, it is possible to obtain perfect alias cancellation. This facilitates the implementation of sub-band coding without the use of very high order filters. This is particularly attractive for real time implementation as a reduced filter order means a reduced computational load and also a reduced latency.

Sub-band coding can be used for coding speech at bit rates in the range 9.6 kbps to 32 kbps. In this range, speech quality is roughly equivalent to that of ADPCM at an equivalent bit rate. In addition, its complexity and relative speech quality at low bit rates make it particularly advantageous for coding below about 16 kbps. However, the increased complexity of sub-band coding when compared to other higher bit rate techniques does not warrant its use at bit rates greater than about 20 kbps. The CD-900 cellular telephone system uses sub-band coding for speech compression.

Example 7.3

Consider a sub-band coding scheme where the speech bandwidth is partitioned into 4 bands. Table below gives the corner frequencies of each band along with the number of bits used to encode each band. Assuming that no side information need be transmitted, compute the minimum encoding rate of this SBC coder.

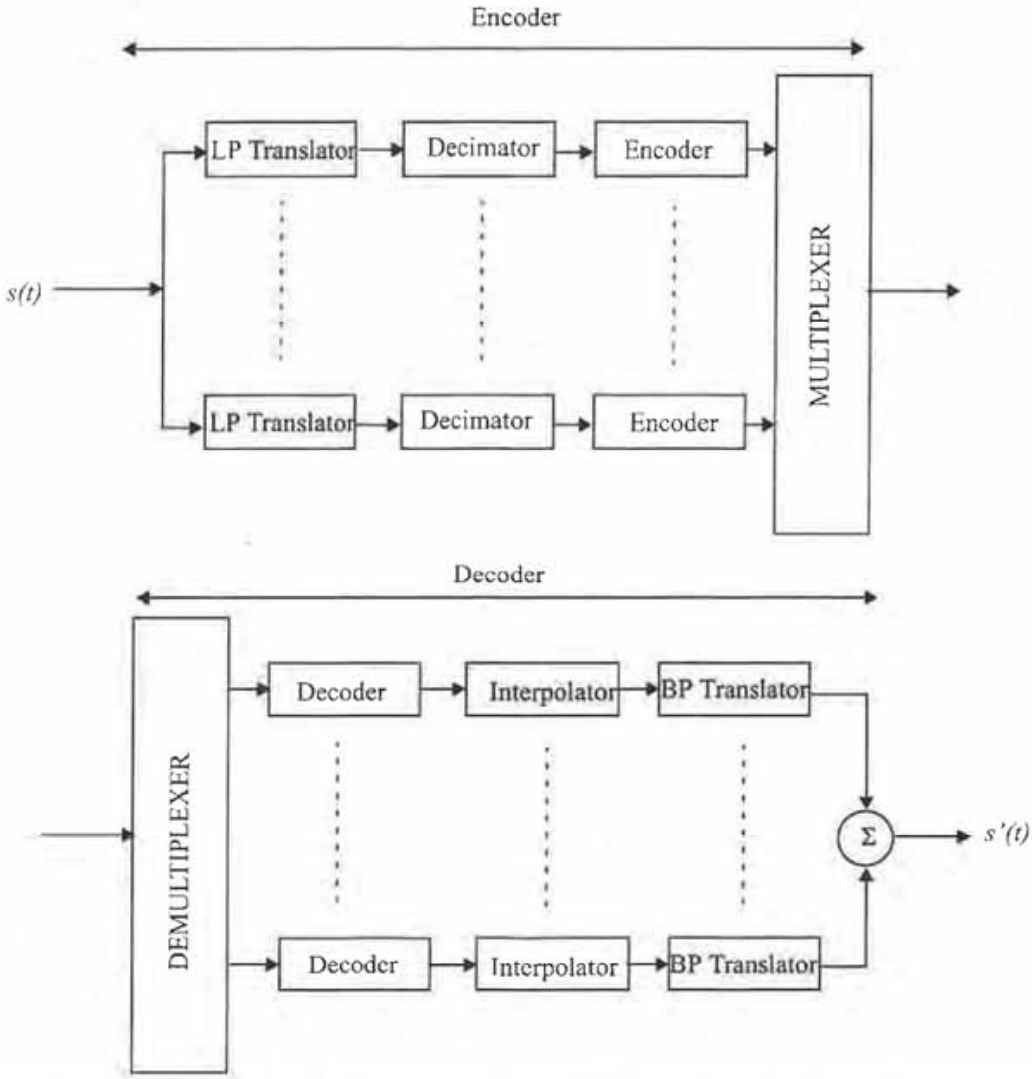

Figure 7.4
Block diagram of a sub-band coder and decoder.

Sub-band Number	Frequency Band (Hz)	# of Encoding Bits
1	225 - 450	4
2	450 - 900	3
3	1000 - 1500	2
4	1800 - 2700	1

Solution to Example 7.3

Given:
Number of sub-bands = N = 4

Therefore, gross channel bit rate = $335/(20 \times 10^{-3}) = 16.75$ kbps.

7.9 The GSM Codec

The speech coder used in the pan-European digital cellular standard GSM goes by a rather grandiose name of regular pulse excited long term prediction (RPE-LTP) codec. This codec has a net bit rate of 13 kbps and was chosen after conducting exhaustive subjective tests [Col89] on various competing codecs.

The RPE-LTP codec [Var88] combines the advantages of the earlier French proposed baseband RELP codec with those of the multi-pulse excited long-term prediction (MPE-LTP) codec proposed by Germany. The advantage of the base band RELP codec is that it provides good quality speech at low complexity. The speech quality of a RELP codec is, however, limited due to the tonal noise introduced by the process of high frequency regeneration and by the bit errors introduced during transmission. The MPE-LTP technique, on the other hand, produces excellent speech quality at high complexity and is not much affected by bit errors in the channel. By modifying the RELP codec to incorporate certain features of the MPE-LTP codec, the net bit rate was reduced from 14.77 kbps to 13.0 kbps without loss of quality. The most important modification was the addition of a long-term prediction loop.

The GSM codec is relatively complex and power hungry. Figure 7.10 shows a block diagram of the speech encoder [Ste94]. The encoder is comprised of four major processing blocks. The speech sequence is first pre-emphasized, ordered into segments of 20 ms duration, and then Hamming-windowed. This is followed by short-term prediction (STP) filtering analysis where the logarithmic area ratios (LAR's) of the reflection coefficients $r_n(k)$ (8 in number) are computed. The 8 LAR parameters have different dynamic ranges and probability distribution functions, and hence all of them are not encoded with the same number of bits for transmission. The LAR parameters are also decoded by the LPC inverse filter so as to minimize the error e_n.

LTP analysis which involves finding the pitch period p_n and gain factor g_n is then carried out such that the LTP residual r_n is minimized. To minimize r_n, pitch extraction is done by the LTP by determining that value of delay, D, which maximizes the crosscorrelation between the current STP error sample, e_n, and a previous error sample e_{n-D}. The extracted pitch p_n and gain g_n are transmitted and encoded at a rate of 3.6 kbps. The LTP residual, r_n, is weighted and decomposed into three candidate excitation sequences. The energies of these sequences are identified, and the one with the highest energy is selected to represent the LTP residual. The pulses in the excitation sequence are normalized to the highest amplitude, quantized, and transmitted at a rate of 9.6 kbps.

Figure 7.11 shows a block diagram of the GSM speech decoder [Ste94]. It consists of four blocks which perform operations complementary to those of the

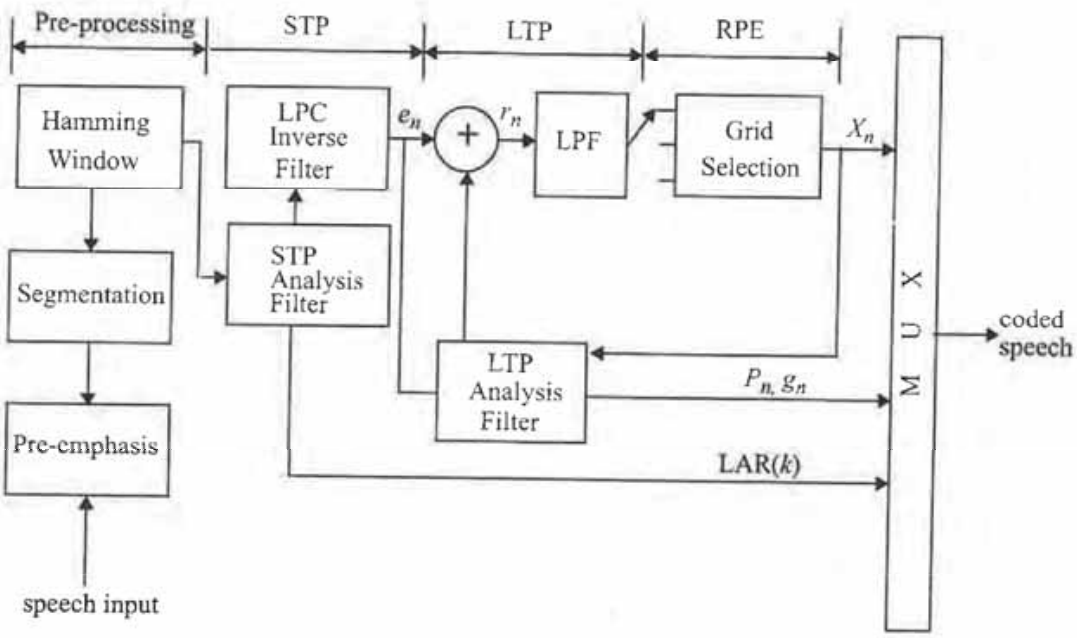

Figure 7.10
Block diagram of GSM speech encoder.

encoder. The received excitation parameters are RPE decoded and passed to the LTP synthesis filter which uses the pitch and gain parameter to synthesize the long-term signal. Short-term synthesis is carried out using the received reflection coefficients to recreate the original speech signal.

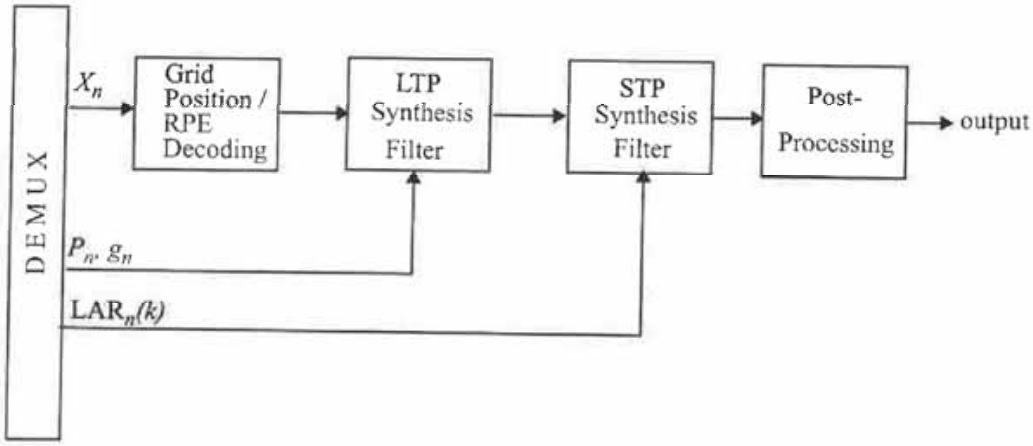

Figure 7.11
Block diagram of GSM speech decoder.

Every 260 bits of the coder output (i.e. 20 ms blocks of speech) are ordered, depending on their importance, into groups of 50, 132, and 78 bits each. The bits in the first group are very important bits called type Ia bits. The next 132 bits

are important bits called Ib bits, and the last 78 bits are called type II bits. Since type Ia bits are the ones which effect speech quality the most, they have error detection CRC bits added. Both Ia and Ib bits are convolutionally encoded for forward error correction. The least significant type II bits have no error correction or detection.

7.10 The USDC Codec

The U.S. digital cellular system (IS-54) uses a vector sum excited linear predictive coder (VSELP). This coder operates at a raw data rate of 7950 bits/s and a total data rate of 13 kbps after channel coding. The VSELP coder was developed by a consortium of companies, and the Motorola implementation was selected as the speech coding standard after extensive testing.

The VSELP speech coder is a variant of the CELP type vocoders [Ger90]. This coder was designed to accomplish the three goals of highest speech quality, modest computational complexity, and robustness to channel errors. The code books in the VSELP encoder are organized with a predefined structure such that a brute-force search is avoided. This significantly reduces the time required for the optimum code word search. These code books also impart high speech quality and increased robustness to channel errors while maintaining modest complexity.

Figure 7.12 shows a block diagram of a VSELP encoder. The 8 kbps VSELP codec utilizes three excitation sources. One is from the long-term ("pitch") predictor state, or adaptive code book. The second and third sources are from the two VSELP excitation code books. Each of these VSELP code books contain the equivalent of 128 vectors. These three excitation sequences are multiplied by their corresponding gain terms and summed to give the combined excitation sequence. After each subframe the combined excitation sequence is used to update the long-term filter state (adaptive code book). The synthesis filter is a direct form 10th order LPC all pole-filter. The LPC coefficients are coded once per 20 ms frame and updated in each 5 ms subframe. The number of samples in a subframe is 40 at an 8 kHz sampling rate. The decoder is shown in Figure 7.13.

7.11 Performance Evaluation of Speech Coders

There are two approaches to evaluating the performance of a speech coder in terms of its ability to preserve the signal quality [Jay84]. Objective measures have the general nature of a signal-to-noise ratio and provide a quantitative value of how well the reconstructed speech approximates the original speech. Mean square error (MSE) distortion, frequency weighted MSE, and segmented SNR, articulation index are examples of objective measures. While objective measures are useful in initial design and simulation of coding systems, they do not necessarily give an indication of speech quality as perceived by the human

instantaneous bandwidth of any one transmission burst is much smaller than the total spread bandwidth. The pseudorandom change of the carrier frequencies of the user randomizes the occupancy of a specific channel at any given time, thereby allowing for multiple access over a wide range of frequencies. In the FH receiver, a locally generated PN code is used to synchronize the receivers instantaneous frequency with that of the transmitter. At any given point in time, a frequency hopped signal only occupies a single, relatively narrow channel since narrowband FM or FSK is used. The difference between FHMA and a traditional FDMA system is that the frequency hopped signal changes channels at rapid intervals. If the rate of change of the carrier frequency is greater than the symbol rate then the system is referred to as a *fast frequency hopping system*. If the channel changes at a rate less than or equal to the symbol rate, it is called *slow frequency hopping*. A fast frequency hopper may thus be thought of as an FDMA system which employs frequency diversity. FHMA systems often employ energy efficient constant envelope modulation. Inexpensive receivers may be built to provide noncoherent detection of FHMA. This implies that linearity is not an issue, and the power of multiple users at the receiver does not degrade FHMA performance.

A frequency hopped system provides a level of security, especially when a large number of channels are used, since an unintended (or an intercepting) receiver that does not know the pseudorandom sequence of frequency slots must retune rapidly to search for the signal it wishes to intercept. In addition, the FH signal is somewhat immune to fading, since error control coding and interleaving can be used to protect the frequency hopped signal against deep fades which may occasionally occur during the hopping sequence. Error control coding and interleaving can also be combined to guard against *erasures* which can occur when two or more users transmit on the same channel at the same time.

8.4.2 Code Division Multiple Access (CDMA)

In *code division multiple access* (CDMA) systems, the narrowband message signal is multiplied by a very large bandwidth signal called the *spreading signal*. The spreading signal is a pseudo-noise code sequence that has a chip rate which is orders of magnitudes greater than the data rate of the message. All users in a CDMA system, as seen from Figure 8.5, use the same carrier frequency and may transmit simultaneously. Each user has its own pseudorandom codeword which is approximately orthogonal to all other codewords. The receiver performs a time correlation operation to detect only the specific desired codeword. All other codewords appear as noise due to decorrelation. For detection of the message signal, the receiver needs to know the codeword used by the transmitter. Each user operates independently with no knowledge of the other users.

In CDMA, the power of multiple users at a receiver determines the noise floor after decorrelation. If the power of each user within a cell is not controlled

Samsung Exhibit 1018, Page 57 of 71
Samsung Electronics Co., Ltd. et al. v. One-E-Way, Inc.
IPR2025-01516

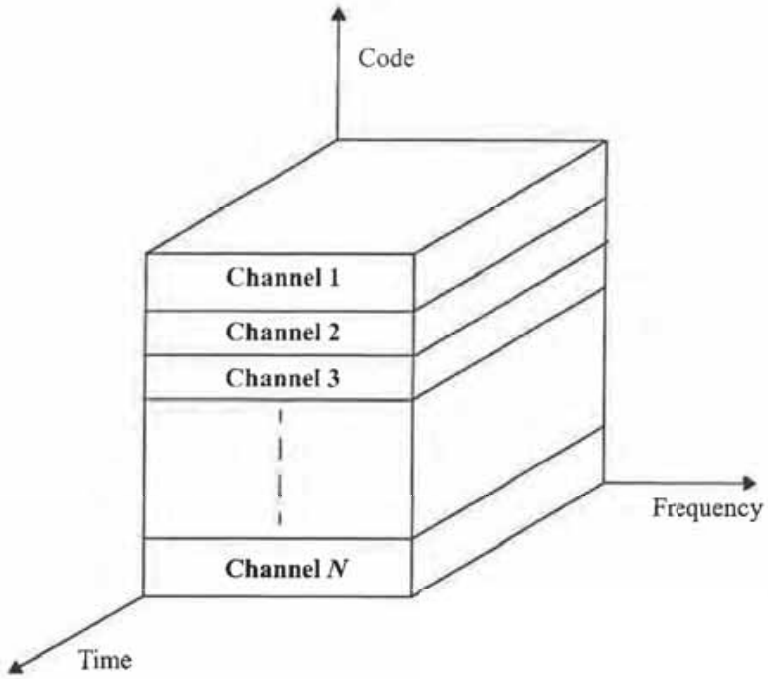

Figure 8.5
CDMA in which each channel is assigned a unique PN code which is orthogonal to PN codes used by other users.

such that they do not appear equal at the base station receiver, then the *near-far problem* occurs.

The near-far problem occurs when many mobile users share the same channel. In general, the strongest received mobile signal will *capture* the demodulator at a base station. In CDMA, stronger received signal levels raise the noise floor at the base station demodulators for the weaker signals, thereby decreasing the probability that weaker signals will be received. To combat the near-far problem, *power control* is used in most CDMA implementations. Power control is provided by each base station in a cellular system and assures that each mobile within the base station coverage area provides the same signal level to the base station receiver. This solves the problem of a nearby subscriber overpowering the base station receiver and drowning out the signals of far away subscribers. Power control is implemented at the base station by rapidly sampling the radio signal strength indicator (RSSI) levels of each mobile and then sending a power change command over the forward radio link. Despite the use of power control within each cell, out-of-cell mobiles provide interference which is not under the control of the receiving base station. The features of CDMA including the following:

- Many users of a CDMA system share the same frequency. Either TDD or FDD may be used.
- Unlike TDMA or FDMA, CDMA has a soft capacity limit. Increasing the

number of users in a CDMA system raises the noise floor in a linear manner. Thus, there is no absolute limit on the number of users in CDMA. Rather, the system performance gradually degrades for all users as the number of users is increased, and improves as the number of users is decreased.

- Multipath fading may be substantially reduced because the signal is spread over a large spectrum. If the spread spectrum bandwidth is greater than the coherence bandwidth of the channel, the inherent frequency diversity will mitigate the effects of small-scale fading.
- Channel data rates are very high in CDMA systems. Consequently, the symbol (chip) duration is very short and usually much less than the channel delay spread. Since PN sequences have low autocorrelation, multipath which is delayed by more than a chip will appear as noise. A RAKE receiver can be used to improve reception by collecting time delayed versions of the required signal.
- Since CDMA uses co-channel cells, it can use macroscopic spatial diversity to provide soft handoff. Soft handoff is performed by the MSC, which can simultaneously monitor a particular user from two or more base stations. The MSC may chose the best version of the signal at any time without switching frequencies.
- Self-jamming is a problem in CDMA system. Self-jamming arises from the fact that the spreading sequences of different users are not exactly orthogonal, hence in the despreading of a particular PN code, non-zero contributions to the receiver decision statistic for a desired user arise from the transmissions of other users in the system.
- The near-far problem occurs at a CDMA receiver if an undesired user has a high detected power as compared to the desired user.

8.4.3 Hybrid Spread Spectrum Techniques

In addition to the frequency hopped and direct sequence, spread spectrum multiple access techniques, there are certain other hybrid combinations that provide certain advantages. These hybrid techniques are described below.

Hybrid FDMA/CDMA (FCDMA) — This technique can be used as an alternative to the DS-CDMA techniques discussed above. Figure 8.6 shows the spectrum of this hybrid scheme. The available wideband spectrum is divided into a number of subspectras with smaller bandwidths. Each of these smaller subchannels becomes a narrowband CDMA system having processing gain lower than the original CDMA system. This hybrid system has an advantage in that the required bandwidth need not be contiguous and different users can be allotted different subspectrum bandwidths depending on their requirements. The capacity of this FDMA/CDMA technique is calculated as the sum of the capacities of a system operating in the subspectra [Eng93].

Samsung Exhibit 1018, Page 59 of 71
Samsung Electronics Co., Ltd. et al. v. One-E-Way, Inc.
IPR2025-01516

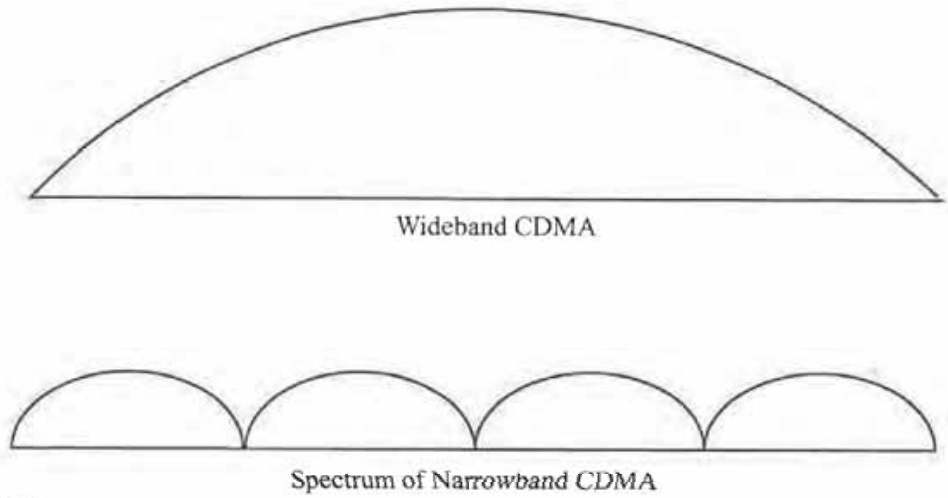

Figure 8.6
Spectrum of wideband CDMA compared to the spectrum of a hybrid, frequency division, direct sequence multiple access.

Hybrid Direct Sequence/Frequency Hopped Multiple Access (DS/FHMA) — This technique consists of a direct sequence modulated signal whose center frequency is made to hop periodically in a pseudorandom fashion. Figure 8.7 shows the frequency spectrum of such a signal [Dix94]. Direct sequence, frequency hopped systems have an advantage in that they avoid the near-far effect. However, frequency hopped CDMA systems are not adaptable to the soft handoff process since it is difficult to synchronize the frequency hopped base station receiver to the multiple hopped signals.

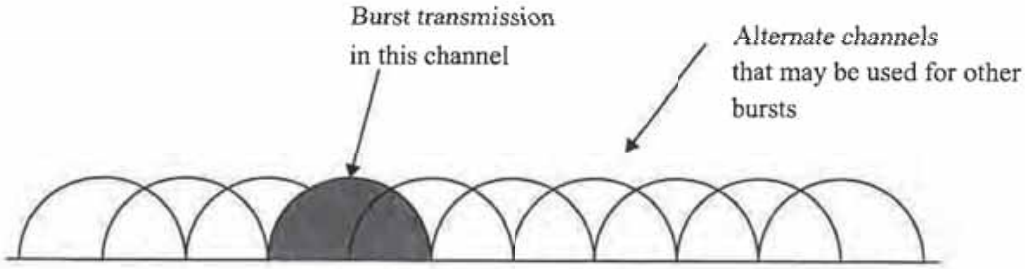

Figure 8.7
Frequency spectrum of a hybrid FH/DS system.

Time Division CDMA (TCDMA) — In a TCDMA (also called TDMA/CDMA) system, different spreading codes are assigned to different cells. Within each cell, only one user per cell is allotted a particular time slot. Thus at any time, only one CDMA user is transmitting in each cell. When a handoff takes place, the spreading code of the user is changed to that of the new cell. Using

the same time, collision is detected, and the transmission is immediately aborted in midstream. This is handled by a user having both a transmitter and receiver which is able to support *listen-while-talk* operation. For a single radio channel, this is done by interrupting the transmission in order to sense the channel. For duplex systems, a full duplex transceiver is used [Lam80].

- ***Data sense multiple access*** (DSMA) — DSMA is a special type of CSMA that relies on successfully demodulating a forward control channel before broadcasting data back on a reverse channel. Each user attempts to detect a *busy-idle* message which is interspersed on the forward control channel. When the busy-idle message indicates that no users are transmitting on the reverse channel, a user is free to send a packet. This technique is used in the cellular digital packet data (CDPD) cellular network described in Chapter 9.

8.6.3 Reservation Protocols

8.6.3.1 Reservation ALOHA

Reservation ALOHA is a packet access scheme based on time division multiplexing. In this protocol, certain packet slots are assigned with priority, and it is possible for users to reserve slots for the transmission of packets. Slots can be permanently reserved or can be reserved on request. For high traffic conditions, reservations on request offers better throughput. In one type of reservation ALOHA, the terminal making a successful transmission reserves a slot permanently until its transmission is complete, although very large duration transmissions may be interrupted. Another scheme allows a user to transmit a request on a subslot which is reserved in each frame. If the transmission is successful (i.e, no collisions are detected), the terminal is allocated the next regular slot in the frame for data transmission [Tan81].

8.6.3.2 Packet Reservation Multiple Access (PRMA)

PRMA uses a discrete packet time technique similar to reservation ALOHA and combines the cyclical frame structure of TDMA in a manner that allows each TDMA time slot to carry either voice or data, where voice is given priority. PRMA was proposed in [Goo89] as a means of integrating bursty data and human speech. PRMA defines a frame structure, much like is used in TDMA systems. Within each frame, there are a fixed number of time slots which may be designated as either "reserved" or "available", depending on the traffic as determined by the controlling base station. PRMA is discussed in Chapter 9.

8.6.4 Capture Effect in Packet Radio

Packet radio multiple access techniques are based on contention within a channel. When used with FM or spread spectrum modulation, it is possible for the strongest user to successfully *capture* the intended receiver, even when many other users are also transmitting. Often, the closest transmitter is able to capture a receiver because of the small propagation path loss. This is called the

near-far effect. The capture effect offers both advantages and disadvantages in practical systems. Because a particular transmitter may capture an intended receiver, many packets may survive despite collision on the channel. However, a strong transmitter may make it impossible for the receiver to detect a much weaker transmitter which is attempting to communicate to the same receiver. This problem is known as the *hidden transmitter* problem.

A useful parameter in analyzing the capture effects in packet radio protocols is the minimum power ratio of an arriving packet, relative to the other colliding packets, such that it is received. This ratio is called the *capture ratio*, and is dependent upon the receiver and the modulation used.

In summary, packet radio techniques support mobile transmitters sending bursty traffic in the form of data packets using random access. Ideal channel throughput can be increased if terminals synchronize their packet transmissions into common time slots, such that the risk of partial packet overlap is avoided. With high traffic loads, both unslotted and slotted ALOHA protocols become inefficient, since the contention between all transmitted packets exposes most of the offered traffic to collisions, and thus results in multiple retransmissions and increased delays. To reduce this situation CSMA can be used where the transmitter first listens either to the common radio channel or to a separate dedicated acknowledgment control channel from the base station. In a real world mobile system, the CSMA protocols may fail to detect ongoing radio transmissions of packets subject to deep fading on the reverse channel path. Utilization of an ALOHA channel can be improved by deliberately introducing differences between the transmit powers of multiple users competing for the base station receiver. The Table 8.2 below shows the multiple access techniques which should be used for different types of traffic conditions.

Table 8.2 Multiple Access Techniques for Different Traffic Types

Type of Traffic	Multiple Access Technique
Bursty, short messages	Contention protocols
Bursty, long messages, large number of users	Reservation Protocols
Bursty, long messages, small number of users	Reservation protocols with fixed TDMA reservation channel
Stream or deterministic (voice)	FDMA, TDMA, CDMA

8.7 Capacity of Cellular Systems

Channel capacity for a radio system can be defined as the maximum number of channels or users that can be provided in a fixed frequency band. Radio capacity is a parameter which measures spectrum efficiency of a wireless system. This parameter is determined by the required carrier-to-interference ratio (C/I) and the channel bandwidth B_c.

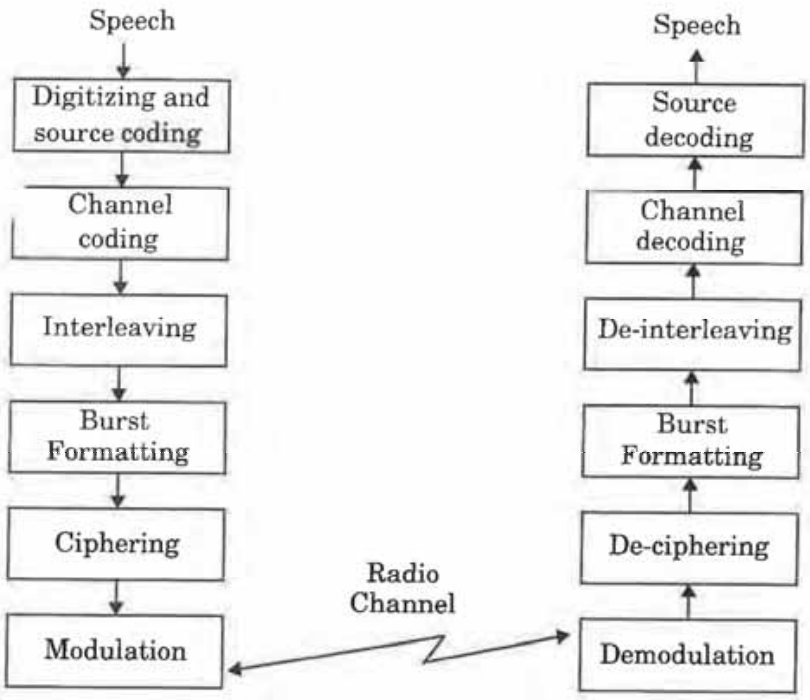

Figure 10.11
GSM operations from speech input to speech output.

Speech Coding — The GSM speech coder is based on the Residually Excited Linear Predictive Coder (RELP), which is enhanced by including a Long-Term Predictor (LTP) [Hel89]. The coder provides 260 bits for each 20 ms blocks of speech, which yields a bit rate of 13 kbps. This speech coder was selected after extensive subjective evaluation of various candidate coders available in the late 1980s. Provisions for incorporating half-rate coders are included in the specifications.

The GSM speech coder takes advantage of the fact that in a normal conversation, each person speaks on average for less than 40% of the time. By incorporating a voice activity detector (VAD) in the speech coder, GSM systems operate in a *discontinuous transmission mode* (DTX) which provides a longer subscriber battery life and reduces instantaneous radio interference since the GSM transmitter is not active during silent periods. A comfort noise subsystem (CNS) at the receiving end introduces a background acoustic noise to compensate for the annoying switched muting which occurs due to DTX.

TCH/FS, SACCH, and FACCH Channel Coding — The output bits of the speech coder are ordered into groups for error protection, based upon their significance in contributing to speech quality. Out of the total 260 bits in a frame, the most important 50 bits, called type Ia bits, have 3 parity check (CRC) bits added to them. This facilitates the detection of non-correctable errors at the

receiver. The next 132 bits along with the first 53 (50 type Ia bits + 3 parity bits) are reordered and appended by 4 trailing zero bits, thus providing a data block of 189 bits. This block is then encoded for error protection using a rate 1/2 convolutional encoder with constraint length $K = 5$, thus providing a sequence of 378 bits. The least important 78 bits do not have any error protection and are concatenated to the existing sequence to form a block of 456 bits in a 20 ms frame. The error protection coding scheme increases the gross data rate of the GSM speech signal, with channel coding, to 22.8 kbps. This error protection scheme as described is illustrated in Figure 10.12.

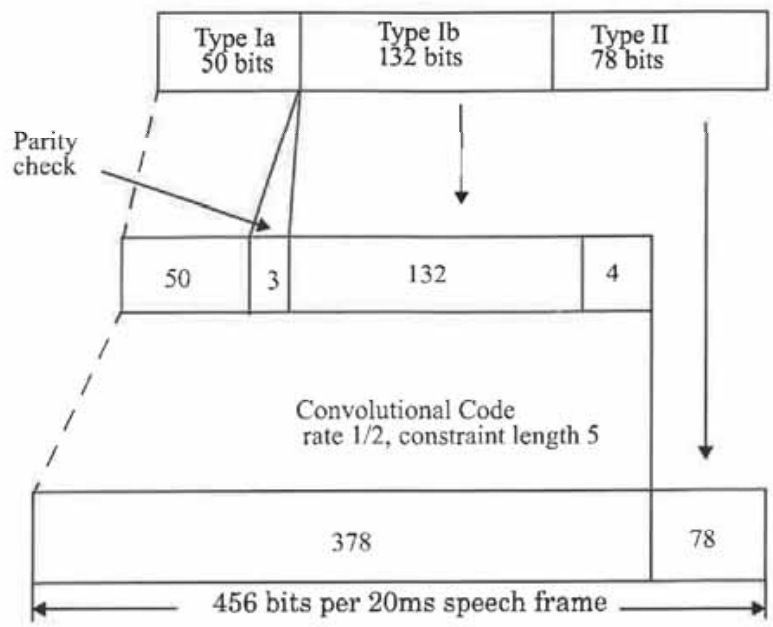

Figure 10.12
Error protection for speech signals in GSM.

Channel Coding for Data Channels — The coding provided for GSM full rate data channels (TCH/F9.6) is based on handling 60 bits of user data at 5ms intervals, in accordance with the modified CCITT V.110 modem standard. As described by Stallings [Ste92] (Chapter 8), 240 bits of user data are applied with 4 tailing bits to a half-rate punctured convolutional coder with constraint length $K = 5$. The resulting 488 coded bits are reduced to 456 encoded data bits through puncturing (32 bits are not transmitted), and the data is separated into four 114 bit data bursts that are applied in an interleaved fashion to consecutive time slots.

Channel Coding for Control Channels — GSM control channel messages are defined to be 184 bits long, and are encoded using a shortened binary cyclic fire code, followed by a half-rate convolutional coder.

The fire code uses the generator polynomial

$$G_5(x) = (x^{23}+1)(x^{17}+x^3+1) = x^{40}+x^{26}+x^{23}+x^{17}+x^3+1$$

bps. The paging channel is used to send control information and paging messages from the base station to the mobiles and operates at 9600, 4800, and 2400 bps. The forward traffic channel (FTC) supports variable user data rates at 9600, 4800, 2400, or 1200 bps.

The forward traffic channel modulation process is described in Figure 10.14 [EIA90]. Data on the forward traffic channel is grouped into 20 ms frames. The user data is first convolutionally coded and then formatted and interleaved to adjust for the actual user data rate, which may vary. Then the signal is spread with a Walsh code and a long PN sequence at a rate of 1.2288 Mcps. Table 10.4 lists the coding and repetition parameters for the forward traffic channel.

Table 10.4 IS-95 Forward traffic channel modulation parameters summary (does not reflect new 13.4 kbps coder)

Parameter	Data Rate (bps)			
User data rate	9600	4800	2400	1200
Coding Rate	1/2	1/2	1/2	1/2
User Data Repetition Period	1	2	4	8
Baseband Coded Data Rate	19,200	19,200	19,200	19,200
PN Chips/Coded Data Bit	64	64	64	64
PN Chip Rate (Mcps)	1.2288	1.2288	1.2288	1.2288
PN Chips/Bit	128	256	512	1024

The speech data rate applied to the transmitter is variable over the range of 1200 bps to 9600 bps.

10.4.2.1 Convolutional Encoder and Repetition Circuit

Speech coded voice or user data are encoded using a half-rate convolutional encoder with constraint length 9. The encoding process is described by generator vectors G_0 and G_1 which are 753 (octal) and 561 (octal), respectively.

The speech encoder exploits pauses and gaps in speech, and reduces its output from 9600 bps to 1200 bps during silent periods. In order to keep a constant baseband symbol rate of 19.2 kbps, whenever the user rate is less than 9600 bps, each symbol from the convolution encoder is repeated before block interleaving. If the information rate is 4800 bps, each code symbol is repeated 1 time. If the information rate is 2400 bps or 1200 bps, each code symbol is repeated 3 or 7 times, respectively. The repetition results in a constant coded rate of 19,200 symbols per second for all possible information data rates.

10.4.2.2 Block Interleaver

After convolution coding and repetition, symbols are sent to a 20ms block interleaver, which is a 24 by 16 array.

Each row in the 64 by 64 Walsh function matrix corresponds to a channel number. For channel number n, the symbols in the transmitter are spread by the sixty-four Walsh chips in the nth row of the Walsh function matrix. Channel number 0 is always assigned to the pilot channel. Since Channel 0 represents Walsh code 0, which is the all zeros code, then the pilot channel is nothing more than a "blank" Walsh code and thus consists only of the quadrature PN spreading code. The synchronization channel is vital to the IS-95 system and is assigned channel number 32. If paging channels are present, they are assigned to the lowest code channel numbers. All remaining channels are available for forward traffic channels.

10.4.2.7 Quadrature Modulation

After the orthogonal covering, symbols are spread in quadrature as shown in Figure 10.14. A short binary spreading sequence, with a period of 2^{15}-1 chips, is used for easy acquisition and synchronization at each mobile receiver and is used for modulation. This short spreading sequence is called the pilot PN sequence, and it is based on the following characteristic polynomials:

$$P_I(x) = x^{15} + x^{13} + x^9 + x^8 + x^7 + x^5 + 1$$

for the in-phase (I) modulation and

$$P_Q(x) = x^{15} + x^{12} + x^{11} + x^{10} + x^6 + x^5 + x^4 + x^3 + 1$$

for the quadrature (Q) modulation.

Based on the characteristic polynomials, the pilot PN sequences $i(n)$ and $q(n)$ are generated by the following linear recursions:

$$i(n) = i(n\text{-}15) \oplus i(n\text{-}10) \oplus i(n\text{-}8) \oplus i(n\text{-}7) \oplus i(n\text{-}6) \oplus i(n\text{-}2)$$

and,

$$q(n) = q(n\text{-}15) \oplus q(n\text{-}13) \oplus q(n\text{-}11) \oplus q(n\text{-}10) \oplus q(n\text{-}9) \oplus q(n\text{-}5) \oplus q(n\text{-}4) \oplus q(n\text{-}3)$$

where the in-phase and quadrature PN codes are used respectively, and $\oplus$ represents modulo-2 addition. A '0' is inserted in each sequence after the contiguous succession of fourteen '0's to generate pilot PN sequences of length 2^{15}. The initial state of both I and Q pilot PN sequences is defined as the state in which the output of the pilot PN sequence generator is the first '1' output following fifteen consecutive '0' outputs. The chip rates for the pilot PN sequences are 1.2288 Mcps. The binary I and Q outputs of the quadrature spreading are mapped into phase according to Table 10.5.

10.4.3 Reverse CDMA Channel

The reverse traffic channel modulation process is shown in Figure 10.17. User data on the reverse channel are grouped into 20 ms frames. All data transmitted on the reverse channel are convolutionally encoded, block interleaved, modulated by a 64-ary orthogonal modulation, and spread prior to

10.4.3.1 Convolutional Encoder and Symbol Repetition

The convolutional coder used in the reverse traffic channel is rate 1/3 and constraint length 9. The three generator vectors g_0, g_1, and g_2 are 557 (octal), 663 (octal), and 771 (octal), respectively.

Coded bits after the convolutional encoder are repeated before interleaving when the data rate is less than 9600 bps. This is identical to the method used on the forward channel. After repetition, the symbol rate out of the coder is fixed at 28,800 bps.

10.4.3.2 Block Interleaver

Block interleaving is performed following convolutional encoding and repetition. The block interleaver spans 20 ms, and is an array with 32 rows and 18 columns. Code symbols are written into the matrix by columns and read out by rows.

10.4.3.3 Orthogonal Modulation

A 64-ary orthogonal modulation is used for the reverse CDMA channel. One of sixty-four possible Walsh functions is transmitted for each group of six coded bits. Within a Walsh function, sixty-four Walsh chips are transmitted. The particular Walsh function is selected according to the following formula:

$$\text{Walsh function number} = c_0 + 2c_1 + 4c_2 + 8c_3 + 16c_4 + 32c_5,$$

where c_5 represents the last coded bit and c_0 represents the first coded bit of each group of six coded symbols that are used to select a Walsh function. Walsh chips are transmitted at a rate of 307.2 kcps as shown in equation (10.1)

$$28.8 \text{ kbps} \times (64 \text{Walsh chips}) / (6 \text{ coded bits}) = 307.2 \text{ kbps} \tag{10.1}$$

Note that Walsh functions are used for different purposes on the forward and reverse channels. On the forward channel, Walsh functions are used for spreading to denote a particular user channel, while on the reverse channel, Walsh functions are used for data modulation.

10.4.3.4 Variable Data Rate Transmission

Variable rate data are sent on the reverse CDMA channel. Code symbol repetition introduces redundancy when the data rate is less than 9600 bps. A data randomizer is used to transmit certain bits while turning the transmitter off at other times. When the data rate is 9600 bps, all interleaver output bits are transmitted. When the data rate is 4800 bps, half of the interleaver output bits are transmitted, and the mobile unit does not transmit 50% of the time, and so forth (see Table 10.6). Figure 10.18 illustrates the process under different data rates [EIA92]. Data in each 20 ms frame are divided into sixteen power control groups, each with period 1.25 ms. Some power control groups are gated-on, while others are gated-off. The data burst randomizer ensures that every repeated code symbol is transmitted exactly once. During the gate-off process, the mobile

speech and channel coding per user. A new half-rate speech and channel coding standard will support six users per 20 ms frame.

PDC is allocated 80 MHz in Japan. The low PDC band uses 130 MHz forward/reverse channel splits. The forward band uses 940 MHz to 956 MHz and the reverse band 810 MHz to 826 MHz. The high PDC band uses 48 MHz channel splits and operates in 1477 MHz to 1501 MHz for the forward link and 1429 MHz to 1453 MHz for the reverse link. PDC uses mobile assisted handoff (MAHO) and is able to support 4-cell reuse.

10.9 Personal Handyphone System (PHS)

The Personal Handyphone System (PHS) is a Japanese air interface standard developed by the Research and Development Center for Radio Systems (RCR). The PHS network interface was specified by the Telecommunications Technical Committee of Japan [Per93].

The PHS standard, like DECT and PACS-UB, uses TDMA and TDD. Four duplex data channels are provided on each radio channel. $\pi/4$ DQPSK modulation at a channel rate of 384 kbps is used on both forward and reverse links. Each TDMA frame is 5 ms in duration, and 32 kbps ADPCM is used in conjunction with CRC error detection (without correction).

PHS supports seventy-seven radio channels, each 300 kHz wide, in the 1895 MHz to 1918.1 MHz band. Forty channels in the 1906.1 MHz to 1918.1 MHz are designated for public systems, and the other thirty-seven channels are used for home or office use in the 1895 MHz to 1906.1 MHz band.

PHS uses dynamic channel assignment, so base stations are able to allocate channels based on the RF (interference) signal strength seen at both the base and portable. PHS uses dedicated control channels (unlike DECT) which all subscribers lock to while idle. Handoffs are supported only at walking speeds, as PHS is designed for microcell/indoor PCS use [Oga94].

10.10 U.S. PCS and ISM Bands

In the mid 1980s, the Federal Communications Commission provided unlicensed radio spectrum in the Industrial, Scientific and Medical (ISM) bands of 902 MHz to 928 MHz, 2400 MHz to 2483.5 MHz, and 5725 MHz to 5850 MHz. As long as radio transmitters use spread spectrum modulation and power levels below 1W, they may share ISM spectrum on a secondary basis. Part 15 of the FCC rules govern the use of unlicensed transmitters in the ISM band.

In 1993, the FCC allocated 140 MHz of spectrum for PCS. Figure 10.22 shows the frequencies between 1850 MHz and 1990 MHz which were licensed in 1994 and 1995. The 30 MHz A and B blocks are designated for large cities, called major trading areas (MTAs), while blocks C through F are licensed for large rural BTAs (basic trading areas). There are 51 MTAs and 492 BTAs in the U.S. In addition to the 120 MHz of licensed spectrum, a total of 20 MHz is allocated

for unlicensed applications. Of this, 10 MHz is designated for "isochronous" (circuit switched) applications such as voice, and 10 MHz for "asynchronous" applications such as wireless packet data. Equipment operating in the PCS unlicensed band must comply with a "spectral etiquette" technique incorporated into Part 15 of the Federal Communications Commission rules. This etiquette was developed by the WINForum industrial body and promotes harmonious coexistence of diverse systems in the unlicensed band while giving designers flexibility with respect to system architecture (modulation, coding, signaling protocols, frame structure, etc.). Two of the essential ingredients in the etiquette are (1) a "listen before talk" (LBT) requirement, which prevents a transmitter from interrupting communications already in progress on a frequency; and (2) a transmit power limit that varies as the square root of the signal bandwidth. This is intended to make wideband and narrowband systems comparatively similar on an interference basis.

The winner of each U.S. PCS license is free to use any desired air interface and system architecture, provided that it complies with FCC rules. There are no predetermined standards for systems that will be operating in the 2 GHz PCS spectrum. This has led the TIA and Committee T1 of the Alliance for Telecommunications Industry Solutions to form a Joint Technical Committee (JTC) to review potential PCS standards and to make recommendations. The JTC has recognized that PCS standards fall naturally into two categories: "higher tier," which support macrocells and high speed mobility, and "low tier" systems which are optimized for lower power, low complexity and low speed mobility. The JTC is considering seven major standards, of which five are variations of existing air interfaces: GSM, IS-54, and IS-95 (high tier) as well as DECT and PACS (low tier). The other two are based on a hybrid TDMA/CDMA approach proposed by Omnipoint and a wideband CDMA (W-CDMA) approach offered by Interdigital. In addition, the TIA has initiated an activity under its TR41 technical committee to develop standards for wireless user premises equipment (WUPE) operating in the unlicensed PCS band [Pad95], if they comply with Part 15 of the FCC Regulations. All types of modulation can be used, including direct sequence and frequency hopped spread spectrum.

The U.S. 2 GHz PCS spectrum currently is occupied by active point-to-point microwave radio systems. For the most part, these incumbent stations must be relocated to other frequencies (e.g., 6 GHz) or converted to optical fiber facilities before PCS systems can be deployed. The PCS licensee is required to compensate the incumbent for the cost of relocating. For the unlicensed band, financing the cost of relocating the incumbents in less straightforward, since an equitable mechanism must be developed for sharing the cost of relocation among the purveyors of unlicensed equipment. In addition, during the transition period, the usage of specific frequencies in specific areas must be limited to those that have

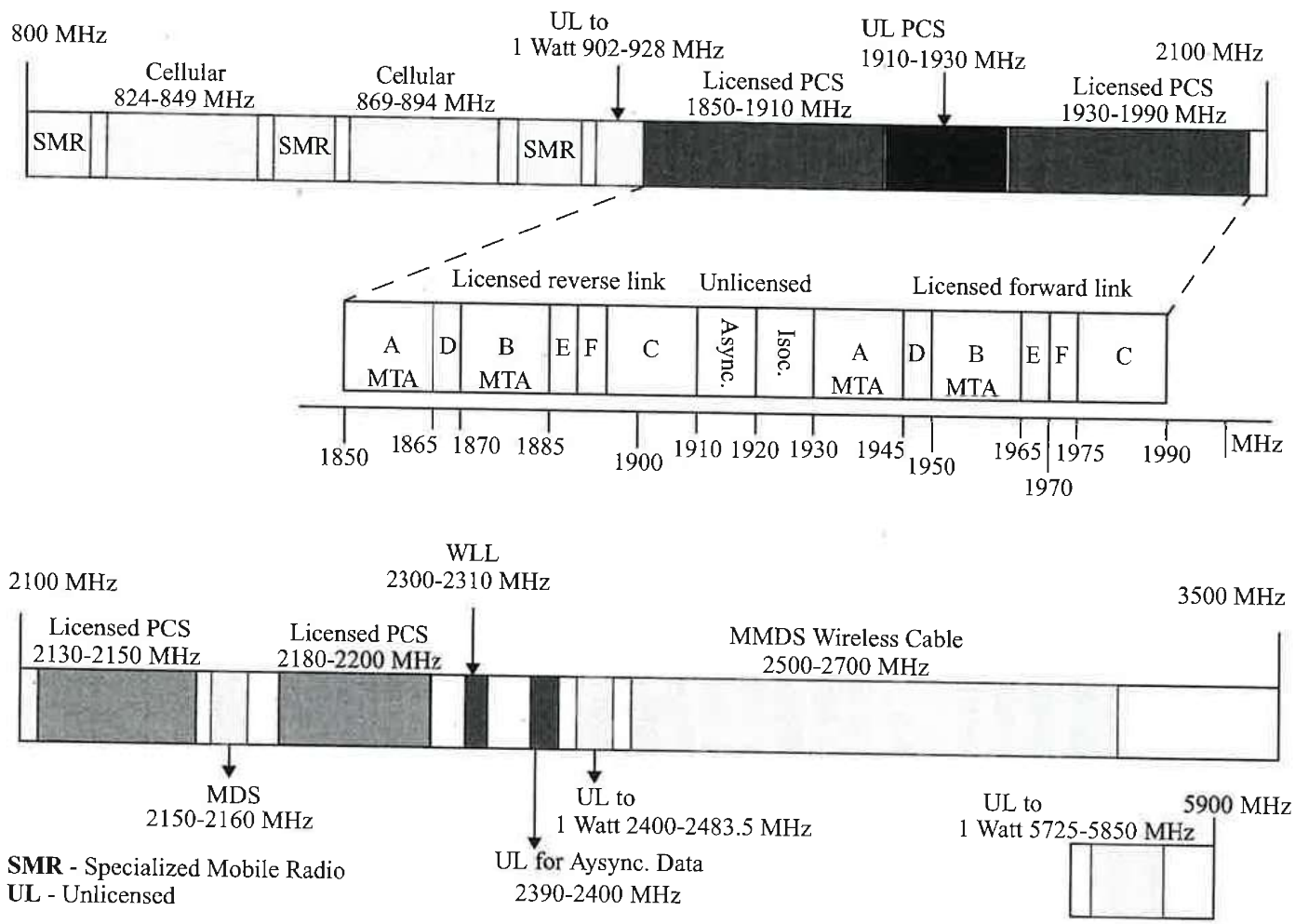

Figure 10.22
U.S. radio spectrum for mobile applications.

Samsung Exhibit 1018, Page 70 of 71
Samsung Electronics Co., Ltd. et al. v. One-E-Way, Inc.
IPR2025-01516

been cleared. The industry forum called UTAM Inc. was formed to deal with these issues [Pad95].

10.11 U.S. Wireless Cable Television

U.S. wireless cable systems use microwave radio frequencies in the 2150 MHz to 2160 MHz and 2500 MHz to 2700 MHz bands to provide multiple channel television programming similar to that offered by traditional hard wire ("wireline") cable systems. The microwave signals are transmitted over the air from a transmission tower to an antenna at each subscriber's home, thus eliminating the need for the large networks of cable and amplifiers required by wireline cable operators. A typical wireless system consists of head-end equipment (satellite signal reception equipment, radio transmitter, other broadcast equipment, and transmission antenna) and reception equipment at each subscriber location (antenna, frequency conversion device, and set-top device). Currently, wireless cable systems are licensed by the Federal Communications Commission to deliver up to thirty-three channels of programming and typically deliver programming on twenty to thirty-five channels, including local "off-air" broadcast channels that are received directly by the customer's antenna rather than retransmitted by the wireless cable operator.

The Federal Communications Commission has granted licenses for wireless cable service as a series of channel groups, consisting of certain channel groups specifically allocated for wireless cable (Multipoint Distribution Service, or MDS, and Multichannel Multipoint Distribution Service, or MMDS) and other channels originally authorized for educational purposes (Instructional Television Fixed Service, or ITFS). Excess capacity on the ITFS channels may be leased by commercial wireless cable providers. Currently, up to thirty-three total channels are potentially available for licensing, lease, or purchase by wireless cable companies in each market. The Federal Communications Commission imposes certain conditions and restrictions on the use and operation of channels.

The Federal Communications Commission imposed a freeze on the filing of new applications for MDS/MMDS licenses in 1992 and for ITFS licenses in 1993. The freezes were intended to allow the Federal Communications Commission time to update its wireless cable data base and to review the rules for these services. Existing MDS/MMDS applications are subject to selection by lotteries; new applications will be subject to selection by auction, just as PCS licenses were auctioned. ITFS licenses will continue to be awarded on a comparative basis according to the Federal Communications Commission specified criteria.

Although the principal regulatory provisions of the 1992 Cable Act do not apply to wireless cable systems, such systems are affected by it. The U.S. Congress stated that its intent in passing the 1992 Cable Act was in part to establish and support existing and new multichannel video services, such as wireless cable, to provide competition to the existing franchise cable television monopoly.