US006256303B1

(12) **United States Patent**
Drakoulis et al.

(10) **Patent No.: US 6,256,303 B1**
(45) **Date of Patent: Jul. 3, 2001**

(54) **WIRELESS BROADCAST LINK TO REMOTE RECEIVER**

(75) Inventors: **Niko Drakoulis**, Elmwood Park; **Ronald G. Pace**, Naperville, both of IL (US); **Michael K. Pedigo**, Indianapolis; **Russell A. Phillips**, Lebanon, both of IN (US)

(73) Assignee: **Akoo, Inc.**, Elmwood Park, IL (US)

(*) Notice: Subject to any disclaimer, the term of this patent is extended or adjusted under 35 U.S.C. 154(b) by 0 days.

(21) Appl. No.: **09/419,178**

(22) Filed: **Oct. 15, 1999**

(51) **Int. Cl.**[7] **H04J 1/10**

(52) **U.S. Cl.** **370/344**; 370/315; 370/492; 455/42; 455/555; 342/125

(58) **Field of Search** 370/312, 315, 370/316, 319, 323, 325, 344, 345, 493, 492; 455/23, 42, 75, 555; 342/125, 128

(56) **References Cited**

U.S. PATENT DOCUMENTS

5,272,525		12/1993	Borchardt et al.	358/83
5,299,264		3/1994	Schotz et al.	381/14
5,319,716		6/1994	McGreevy	381/79
5,349,386		9/1994	Borchardt et al.	348/485
5,410,735		4/1995	Borchardt et al.	455/42
5,477,539	*	12/1995	Brown	370/312
5,491,839		2/1996	Schotz	455/66
5,581,617		12/1996	Schotz et al.	381/14
5,619,582	*	4/1997	Oltman et al.	381/82
5,666,658		9/1997	Borchardt et al.	455/42
5,768,696		6/1998	Law	455/127
6,067,039	*	5/2000	Pyner et al.	342/125
6,137,995	*	10/2000	Durec et al.	455/75

* cited by examiner

Primary Examiner—Douglas Olms
Assistant Examiner—Shick Hom
(74) *Attorney, Agent, or Firm*—Young & Basile, PC

(57) **ABSTRACT**

A high frequency signal transmission apparatus includes a transmitter for transmitting received signals from a signal source as a modulated signal on a high frequency 900 MHz carrier to a remote receiver. The remote receiver converts the high frequency carrier in at least one conversion step to a lower frequency carrier signal. The lower frequency carrier signal carrying the modulated signal is then converted to another carrier signal and retransmitted as a modulated second signal to another remote receiver capable of demodulating the signal and broadcasting the audio sounds or video images. The oscillators in the transmitter and receiver are selectable to operate at discrete frequencies. Automatic fine tuning control is provided in the receiver to accommodate drift of the oscillator in the receiver. A recorder is coupled to the receiver for temporarily storing a demodulated first signal from the transmitter and then outputting the stored signals to a second transmitter for retransmission to a remote output device.

22 Claims, 8 Drawing Sheets

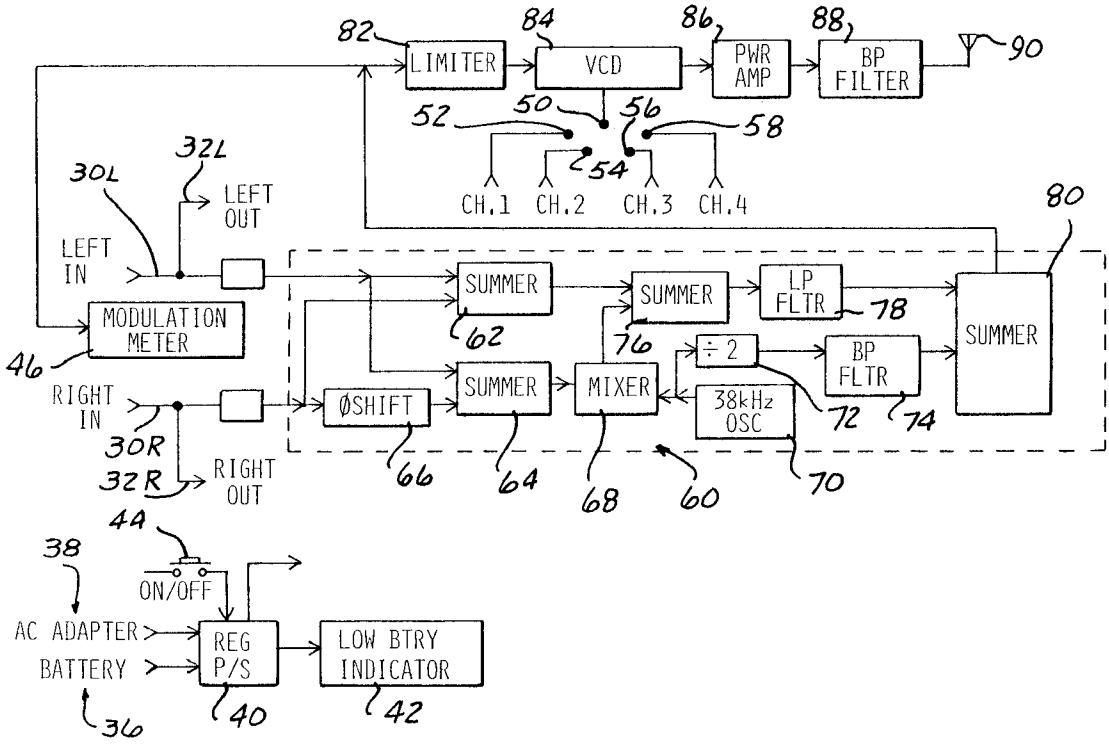

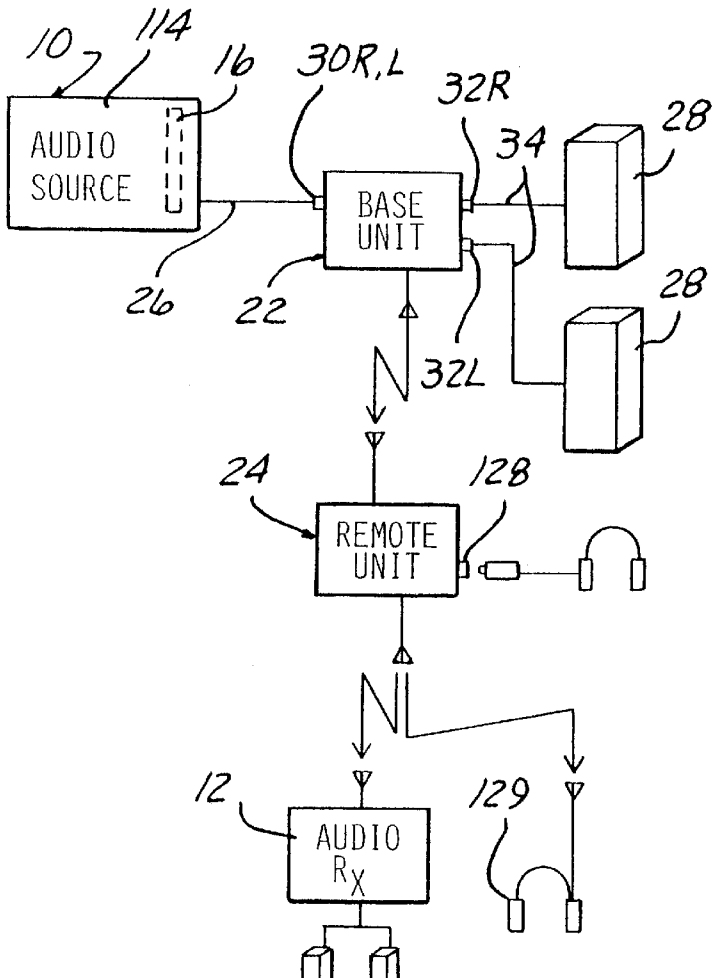
10
114
16
30R,L
32R
34
28
28
AUDIO SOURCE
BASE UNIT
26
22
32L
24
128
REMOTE UNIT
12
AUDIO Rx
129

FIG. 1

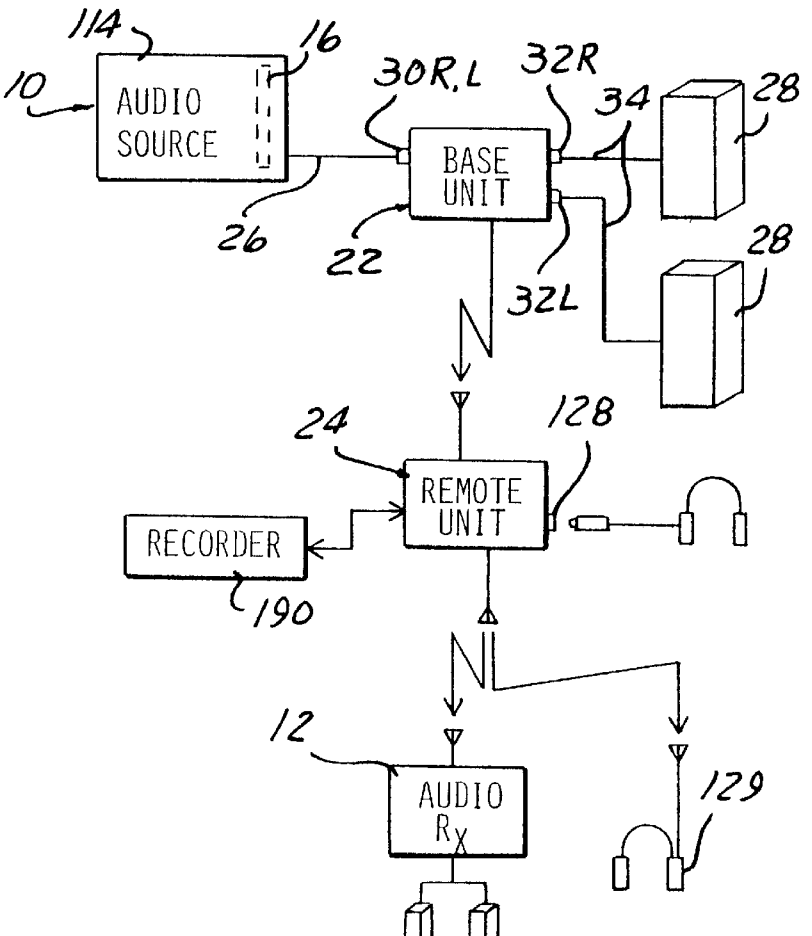
114
16
10
30R,L
32R
34
28
28
AUDIO SOURCE
BASE UNIT
26
22
32L
24
128
REMOTE UNIT
RECORDER
190
12
AUDIO Rx
129

FIG. 6

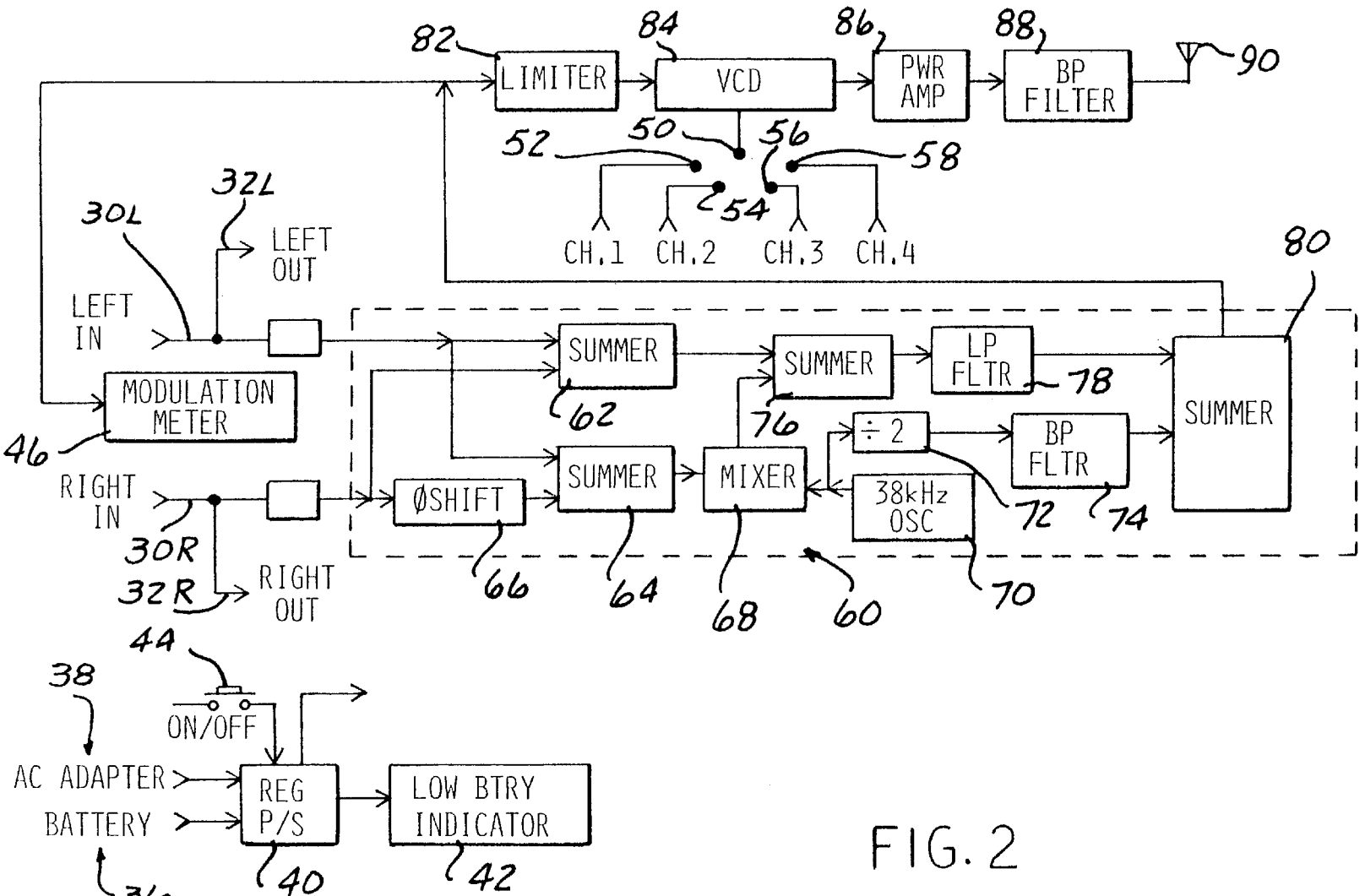
LIMITER
VCO
PWR AMP
BP FILTER
82
84
86
88
90
52
50
56
58
54
CH.1
CH.2
CH.3
CH.4
32L
30L
LEFT OUT
LEFT IN
80
SUMMER
SUMMER
LP FLTR
78
MODULATION METER
46
62
76
÷ 2
BP FLTR
SUMMER
RIGHT IN
ØSHIFT
SUMMER
MIXER
38kHz OSC
72
74
30R
32R
RIGHT OUT
66
64
68
60
70
44
38
ON/OFF
AC ADAPTER
BATTERY
REG P/S
LOW BTRY INDICATOR
36
40
42

FIG. 2

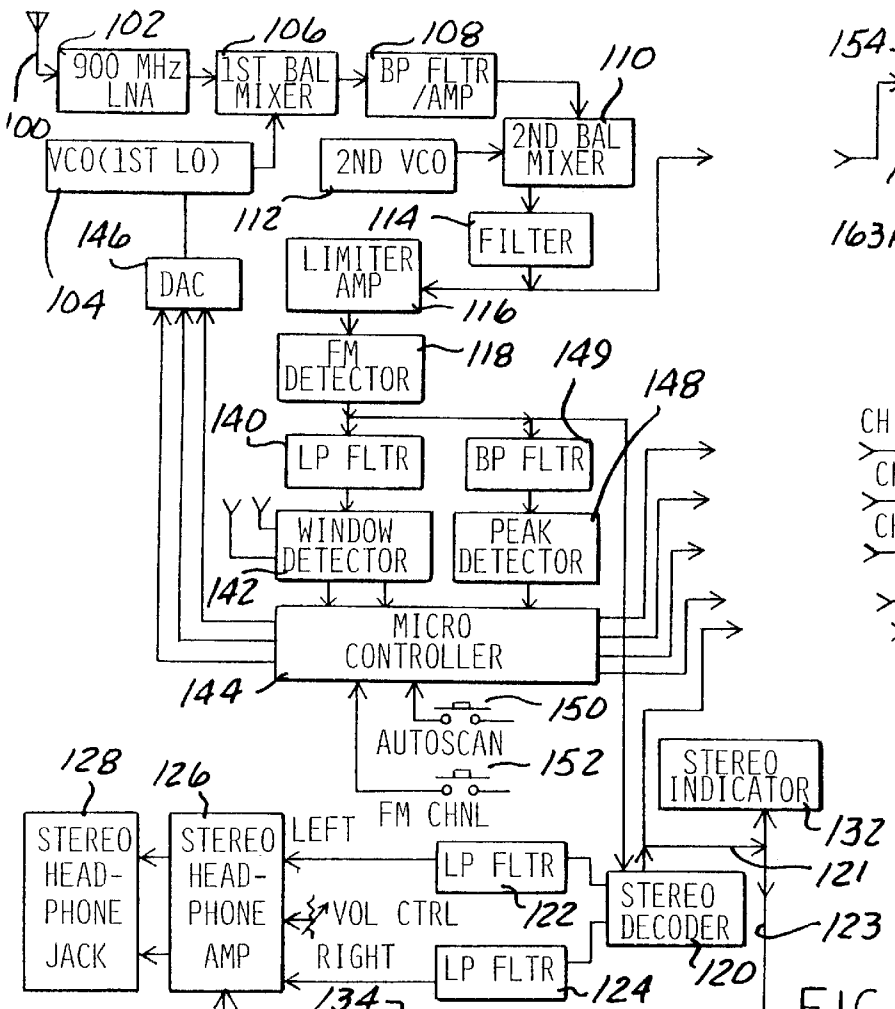
100
102
900 MHz LNA
106
1ST BAL MIXER
108
BP FLTR /AMP
110
2ND BAL MIXER
VCO(1ST LO)
2ND VCO
112
114
FILTER
146
DAC
104
LIMITER AMP
116
FM DETECTOR
118
149
148
140
LP FLTR
BP FLTR
WINDOW DETECTOR
PEAK DETECTOR
142
MICRO CONTROLLER
144
150
AUTOSCAN
152
FM CHNL
STEREO INDICATOR
132
128
126
STEREO HEAD-PHONE JACK
STEREO HEAD-PHONE AMP
LEFT
VOL CTRL
RIGHT
LP FLTR
122
LP FLTR
124
STEREO DECODER
120
121
123
134

FIG. 3A

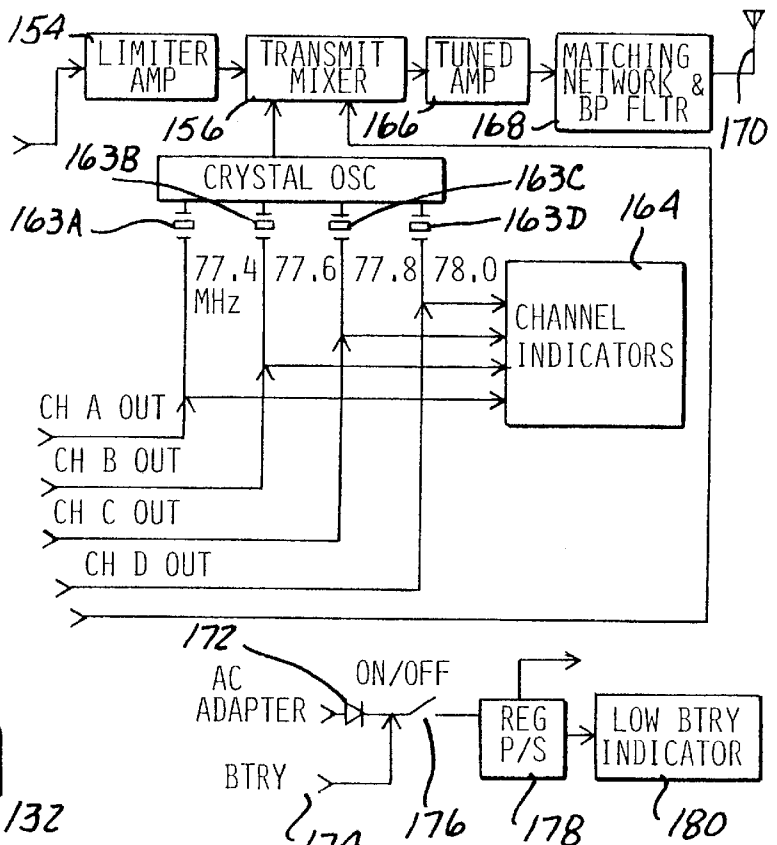
154
LIMITER AMP
TRANSMIT MIXER
TUNED AMP
MATCHING NETWORK & BP FLTR
156
166
168
170
163B
CRYSTAL OSC
163C
163A
163D
164
77.4 MHz
77.6
77.8
78.0
CHANNEL INDICATORS
CH A OUT
CH B OUT
CH C OUT
CH D OUT
172
AC ADAPTER
ON/OFF
REG P/S
LOW BTRY INDICATOR
BTRY
174
176
178
180

FIG. 3B

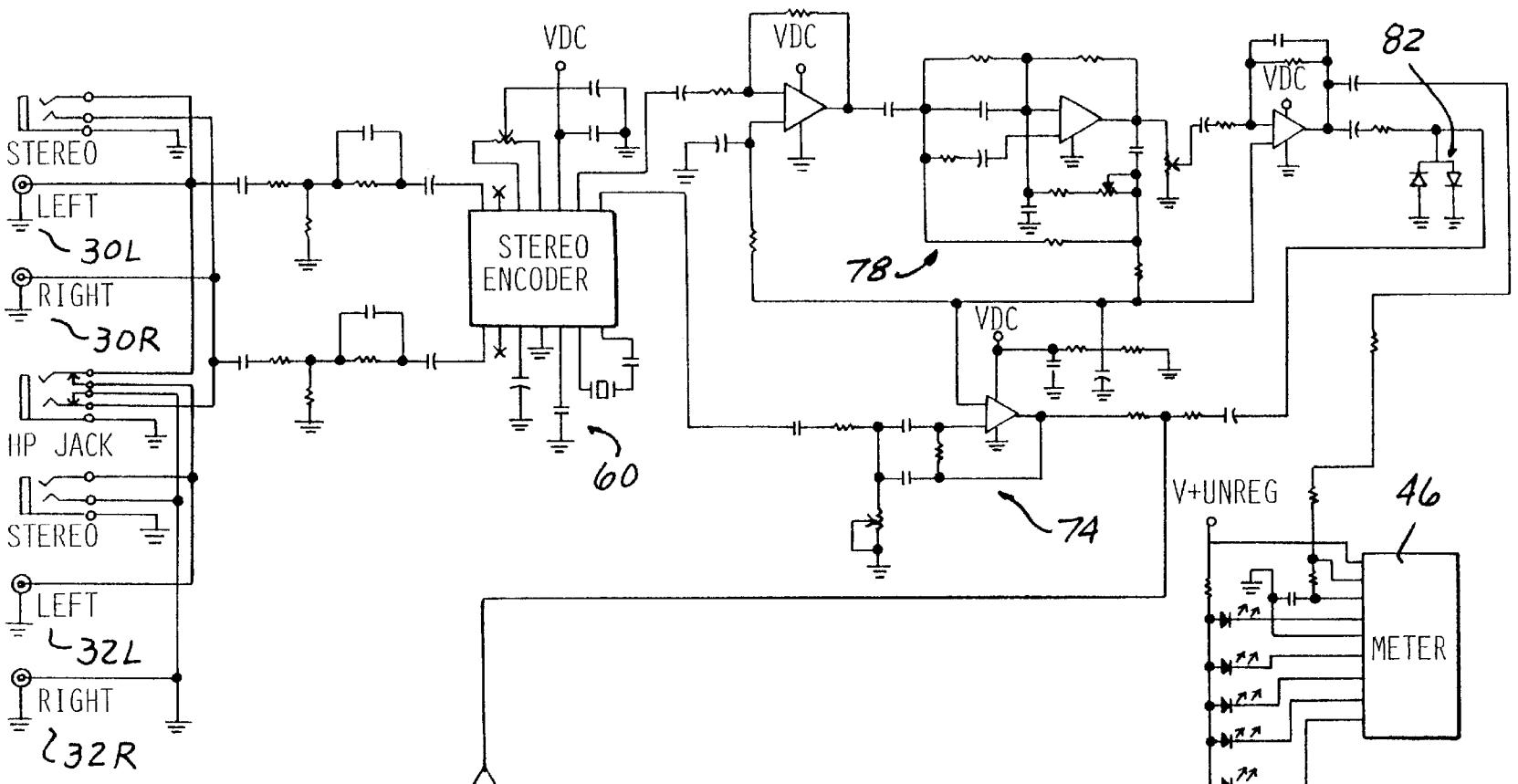
STEREO
LEFT
30L
RIGHT
30R
HP JACK
STEREO
LEFT
32L
RIGHT
32R
VDC
STEREO ENCODER
60
VDC
78
VDC
74
VDC
82
V+UNREG
46
METER

FIG. 4A

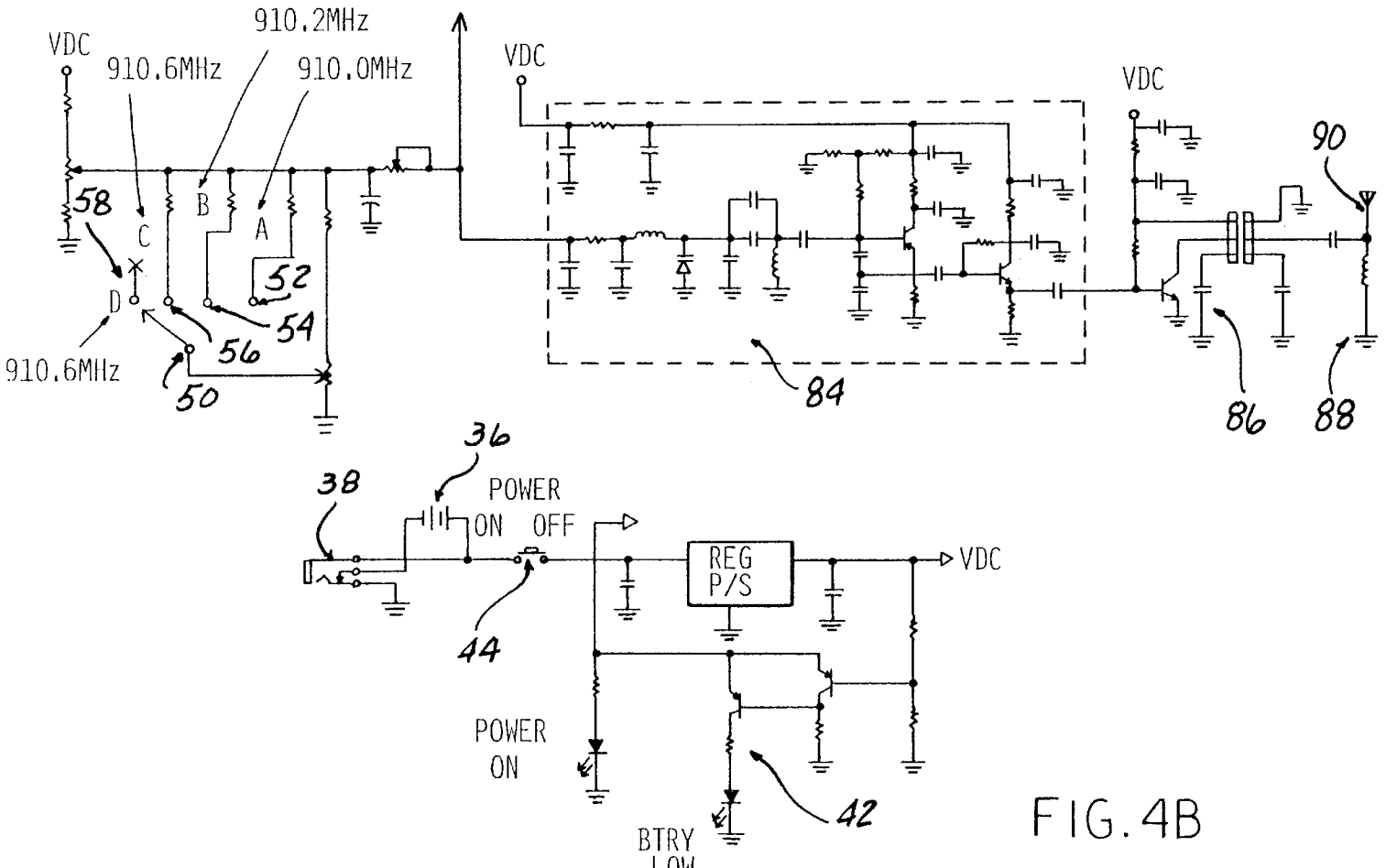
VDC
910.6MHz
910.2MHz
910.0MHz
VDC
VDC
58
C
B
A
52
D
54
56
910.6MHz
50
84
86
88
90
36
38
POWER
ON
OFF
REG
P/S
VDC
44
POWER
ON
BTRY
LOW
42

FIG. 4B

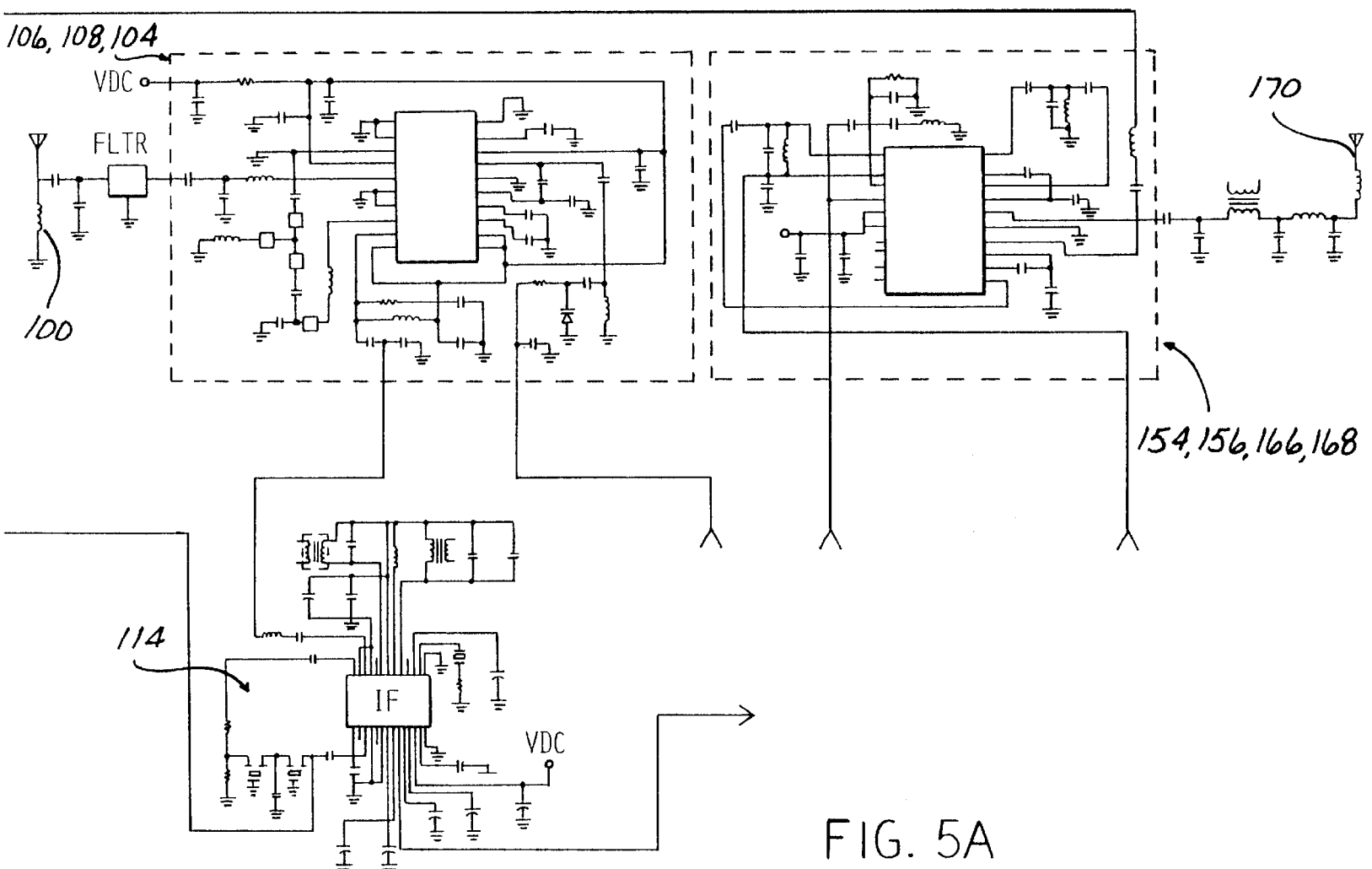

FIG. 5A

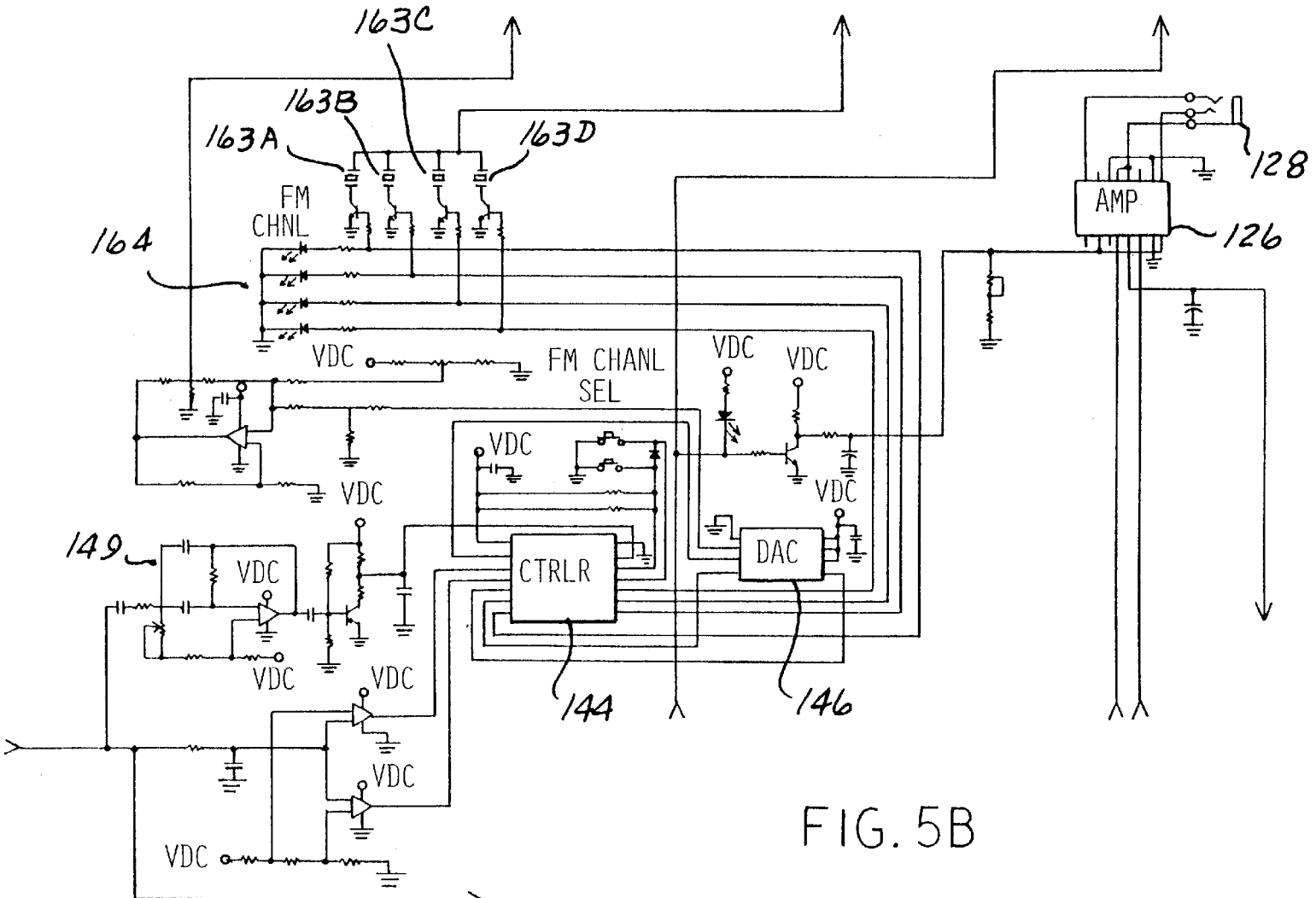
163C
163B
163A
163D
FM
CHNL
164
VDC
FM CHANL
SEL
VDC
VDC
VDC
VDC
VDC
149
VDC
VDC
VDC
VDC
VDC
CTRLR
DAC
144
146
AMP
128
126

FIG. 5B

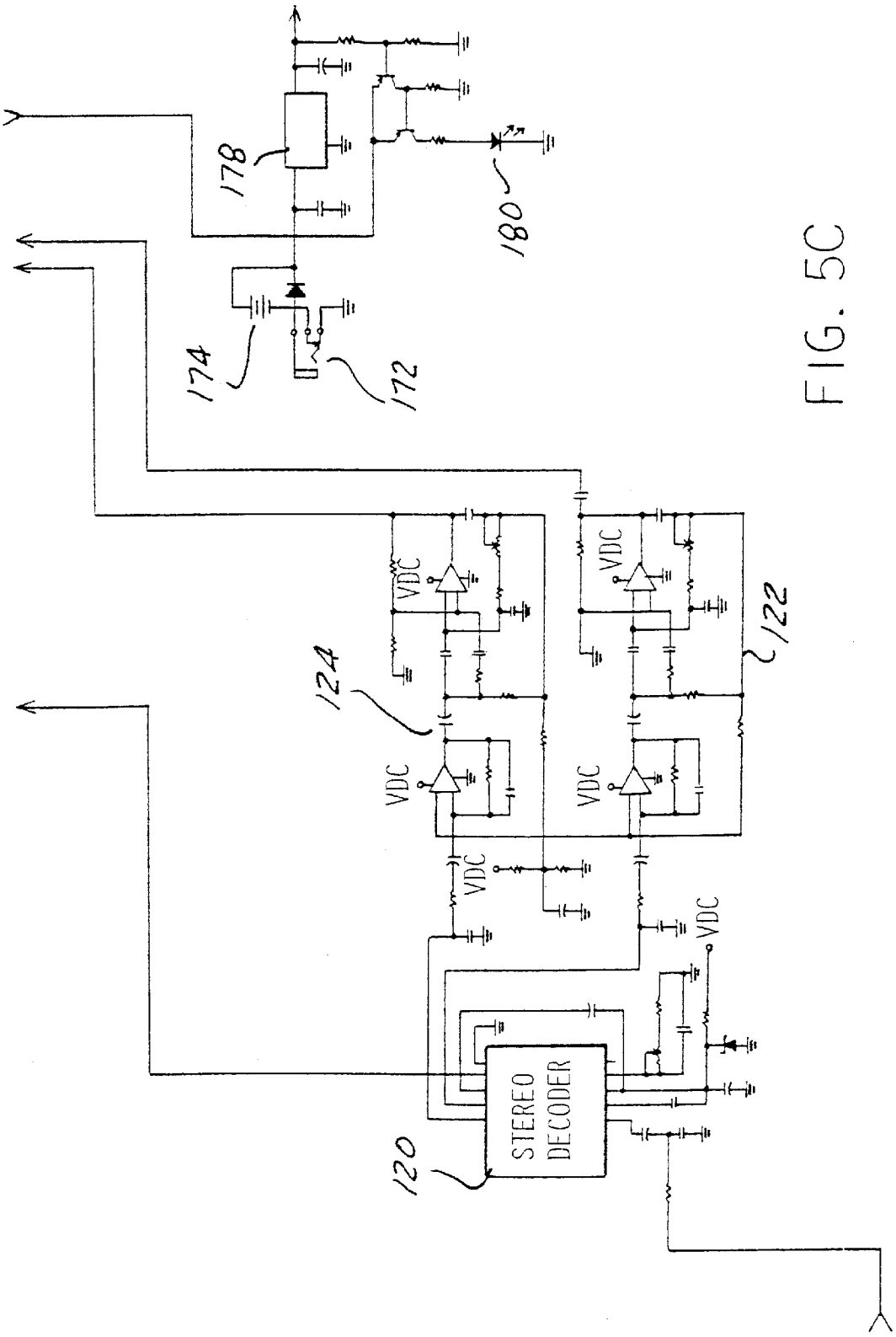

FIG. 5C

Samsung Exhibit 1021, Page 9 of 18
Samsung Electronics Co., Ltd. et al. v. One-E-Way, Inc.
IPR2025-01516

WIRELESS BROADCAST LINK TO REMOTE RECEIVER

BACKGROUND OF THE INVENTION

1. Field of the Invention

The present invention relates, in general, to wireless signal transmission systems and apparatus and, specifically, to wireless transmission system capable of transmitting audio or video signals in either analog or digital format via high frequency carrier signals in the 900 MHZ range and, even more specifically, to wireless signal transmission systems wherein a transmitter coupled to a signal source is linked via a wireless connection to a remote receiver and output device.

2. Description of the Art

Various wireless audio and video signal transmission systems have been devised which transmit audio and/or video signals, such as television signals, radio signals, etc., by a wireless link from a signal source to a signal receiver or output device capable of converting the received signals to audio and/or video sounds.

Local wireless television transmission systems which transmit television or radio signals from a local source, such as a television, VCR, radio set or radio stereo receiver, frequently transmit such signals within a frequency band above 900 MHZ and, preferably, within a frequency band of 902 MHZ to 928 MHZ. This frequency band is desirable because at higher carrier frequencies, the bandwidth of the transmitted signal occupies a smaller region of the transmission bandwidth than at lower carrier frequencies. This leaves more channels available for use and results in decreased RF interference and noise as well as greater flexibility in channel selection.

Many televisions and radio stations now include stereo audio signals in their transmissions. Thus, a wireless signal transmission apparatus must have a capability of transmitting stereo audio signals. Conventionally, stereo audio signals are transmitted by adding the right and left audio channels to form a first signal and subtracting the right and left channels to form a second signal which is modulated on a subcarrier of 38 KHz. The subcarrier is suppressed and the combination of the first signal, the subcarrier modulated second signal, and a 19 KHz pilot signal form a multiplexed stereo signal which modulates a carrier for transmission to a remote receiver. Conventional integrated circuits for producing such multiplexed stereo signals, known as stereo encoder circuits, are available commercially.

Such high frequency wireless transmission systems conventionally include a transmitter which is capable of transmitting a television or radio mono or stereo signals and a remote receiver, both having appropriate antennas for transmitting and receiving the source signals as a modulated high frequency carrier. Heretofore, the remote receiver has been mounted in close proximity to or formed as a part of a signal output device, such as an AM/FM stereo receiver, television, for example. The distance or separation between the remote receiver antenna and the output device is relatively limited due to the low power level signals transmitted at the high carrier frequency. This small transmission range limits the use of additional speakers or an additional receiver and speakers which may not be located in the same general area as the first transmitter and the output device.

Audio and video signals are now available through the Internet typically in the form of streaming broadcast of radio or television programs, recorded music, etc. The audio and/or video signals are downloaded from the Internet signal source by a user's Internet service provider and input through a modem to the user's computer. The computer generates signals to an audio and/or video output card which then transmits analog output signals to speakers coupled to the computer or to a monitor for broadcast of the signals.

Frequently, however, the audio system or the monitor employed with a computer is not as sophisticated as the user's home stereo system or television. Further, a user's computer may not be located in the same room or area of a home as the multi-component stereo system or television.

Thus, it would be desirable to provide a wireless signal transmission apparatus which is capable of retransmitting high frequency audio and/or video signals modulated on a high frequency carrier by a first transmitter and transmitted wirelessly via the high frequency carrier to a remote receiver for re-broadcast. It would also be desirable to provide a wireless signal transmission apparatus which has an expanded transmission range as compared to previously devised high frequency transmission systems. It would also be desirable to provide a wireless high frequency signal transmission system which is capable of re-broadcasting streaming broadcast signals from the Internet or any other audio and/or video source to a remote receiver which may located at a considerable distance from the originating transmission source.

SUMMARY OF THE INVENTION

The present invention is a signal transmission apparatus capable of transmitting audio and/or video signals from a suitable signal source via a high frequency (900 MHZ) carrier to a remote receiver which down converts the high frequency carrier signal to a lower frequency carrier signal and combines it with the modulated signal before transmitting the second modulated signal to a further remote receiver capable of demodulating and generating audio and/or video output.

According to one aspect of the present invention, the apparatus includes a first transmitter adapted to be coupled to the signal source for providing audio and/or video frequency signals in either analog or digital format. The signal source may be any source capable of generating audio signals, such as a sound generator circuit in a computer, a CD player, an AM/FM tuner or AM/FM stereo receiver, and/or video signals, such as a cable TV signal, VCR, satellite downlink, television broadcast, etc.

A first oscillator produces a high frequency carrier signal. Means are provided for combining the high frequency carrier signal with the audio and/or video frequency signals to form a first modulated signal transmitted by an antenna from the first transmitter.

A first receiver, remote from the first transmitter, is connected to an antenna for receiving the first modulated signal. Means are provided for down converting the first modulated signal from the high frequency carrier signal of the first transmitter to a second modulated signal including a lower frequency carrier signal. A second transmitter is coupled to the first receiver and the converting means for retransmitting the second modulated signal to a further remote receiver capable of generating audio sounds and/or displaying video images after demodulating the received modulated signal.

According to one aspect of the invention, the first selectable means are connected to the first oscillator to generating one of a plurality of discrete carrier frequency outputs from the first oscillator. Preferably, the oscillator output frequencies are in the 900 MHZ range.

In another aspect, the first selectable means comprises means for inputting one of a plurality of discrete voltages to the first oscillator. These voltages may be, in one aspect of the invention, provided by user control of a multiposition switch on the base unit containing the first transmitter.

According to another aspect of the present invention, the second selectable means is coupled to the remote receiver for generating one of a plurality of discrete second carrier frequencies from a second oscillator coupled to the second transmitter.

In another aspect of the present invention, a second oscillator is coupled to the first receiver for converting the carrier frequency of the first modulated signal to a lower frequency carrier. The second selectable means further includes means for selecting one of a plurality of crystals, each enabling the second oscillator to oscillate at a discrete frequency.

According to the invention, the converting means further comprises means for converging the high frequency carrier signal of the first modulated signal received by the receiver to a lower carrier signal used in the second modulated signal. Preferably, the lower frequency signal is in the low end of the FM broadcast frequency band in the case of transmitted audio signals.

According to one aspect of the invention, the converting means preferably converts the high frequency carrier signal of the first modulated signal to the lower frequency carrier signal used in the second modulated signal in two frequency steps.

Further, means are also provided for converting the lower frequency carrier signal to a higher transmit frequency carrier signals applied to the second transmitter.

According to one aspect of the present invention, the source comprises audio signals received through Internet communication from a remote audio source by a central processor. A sound generator circuit is coupled to the central processor for generating audio frequency signals from a central processor output. The audio frequency signals are supplied to the first transmitter. In addition, according to one aspect of the present invention, connectors or jacks may be provided on a housing containing the first transmitter to also supply the audio signals from the audio source to a pair of speakers.

According to another aspect of the present invention, the first receiver also includes automatic frequency control means. The automatic frequency control means includes means for generating an output upon detecting an audio or video signal from the first modulated signal. Means are responsive to the output of the detecting means for generating a signal proportional to the center of frequency of the converted lower frequency carrier signal. Means are also responsive to the signal proportional to the center of frequency for determining one of a high or low status of the detected center of frequency relative to a nominal center frequency. The means generating an output corresponding to the determined high or low status of the detected center frequency. A controller is responsive to the output for adjusting the frequency of the second oscillator until the output of the detector means is proportional to the nominal center frequency.

In yet another aspect of the present invention, a third oscillator is coupled to the first transmitter for generating a pilot carrier frequency signal. Means are provided for modulating the pilot carrier frequency signal with the audio signal and the high frequency carrier signal as the first modulated signal for transmission to the first receiver. Means are provided in the first receiver for detecting the pilot carrier frequency signal and generating an output upon detecting the pilot carrier frequency signal. The controller, in response to the absence of the pilot carrier frequency signal step wise advances the output frequency of the first oscillator until the pilot carrier frequency signal is detected.

In yet another aspect of the invention, a recorder is coupled to the demodulated output of the remote unit for receiving the audio and/or video signals received by the remote unit and storing said signals in a suitable recording media, such as a flash memory, etc. The recording media may also be an MP3 compatible storage and replay device, etc.

The recording means, upon activation, outputs the stored signals representing audio or visual media through the transmitter section of the remote unit for transmission in the frequency band associated with said signals to the end output device or receiver.

The wireless signal transmission apparatus of the present invention provides several unique features not found in previously devised high frequency carrier transmission systems, such as systems utilizing 900 MHZ signal transmission.

The present inventive apparatus further retransmits a wireless received signal at a remote receiver to a further remote receiver. This expands the range of the present wireless signal transmission apparatus compared to previously devised high frequency signal transmission systems.

The present apparatus also provides selectable channels in both the transmitter and the receiver to provide excellent signal quality without interference. The present apparatus uniquely converts the high frequency carrier of the first modulated signal from the first transmitter to a lower frequency carrier used in the second modulated signal transmitted from a remote unit containing the first receiver to the further remote receiver without utilizing conventional demodulating and modulation of circuits. This improves the signal to noise quality of the transmitted signal while significantly reducing the cost of the apparatus since less expensive conversion circuits are employed rather than the higher cost modulation and demodulation circuits.

BRIEF DESCRIPTION OF THE DRAWING

The various features, advantages and other uses of the present invention will become more apparent by referring to the following detailed description and drawing in which:

FIG. **1** is a block diagram of a wireless high frequency signal transmission apparatus according to the present invention;

FIG. **2** is a block diagram of the base unit signal transmitter shown in FIG. **1** constructed in accordance with one aspect of the present invention;

FIGS. **3**A and **3**B are block diagrams of a remote receiver unit shown in FIG. **1** according to one aspect of the present invention;

FIGS. **4**A and **4**B are detailed circuit diagrams of the transmitter shown in FIG. **2**;

FIGS. **5**A, **5**B, and **5**C are detailed circuit diagrams of the receiver shown in FIGS. **3**A and **3**B; and

FIG. **6** is a block diagram of another embodiment of a wireless high frequency signal transmission apparatus according to the present invention having a recording media.

DESCRIPTION OF PREFERRED EMBODIMENT

Referring now to the drawings, and to FIGS. **1**–**5**C in particular, there is depicted a preferred aspect of the present

invention which is described hereafter with reference to the transmission of audio stereo signals from an audio signal source **10** to a remote audio output device **12**.

However, it will be understood that the following description of an audio signal embodiment of the inventive high frequency signal transmission apparatus is by example only as the present invention also encompasses the high frequency transmission of video signals and both analog and video signals in either analog or digital format. The source of video signals can include an Internet media broadcast, a cable television signal feed, a television broadcast, the output of a video cassette recorder, etc.

Although the audio source **10** is described hereafter as a computer connected via a modem, not shown, to the Internet for receiving and downloading music or other audio signals from a remote source via conventional Internet communication, the audio source **10** may be any suitable mono or stereo audio source which provides music, data, or verbal sounds. The audio source **10** may also be provided in different forms, other than the illustrated computer **14** and computer sound generator card **16**. Examples of other audio sources **10** suitable for use in the present invention include conventional radio frequency transmitted audio signals from a television or radio broadcast antenna, a CD player, AM/FM tuner, tape deck, turntable, etc.

A wireless signal transmission apparatus **20** of the present invention, as shown in FIG. **1**, includes a base unit **22** containing a high frequency transmitter and a remote unit **24** which is capable of receiving the high frequency transmitted signal and then retransmitting or re-broadcasting the modulated signal on a lower carrier frequency to the remote audio receiver or output device **12**.

As shown in FIG. **1**, the base unit **22** is adapted to be coupled via jacks or connectors and electrical conductors to the signal source **10**, which, in this aspect of the invention, is described as being the computer **12**. Appropriate output jacks on the computer **14** are connected to outputs on the internally mounted computer sound generating card **16** and receive plug-in connectors on electrical cables or conductors **26**. The cables **26** would normally run as right and left channel cables to a speaker pair **28**.

However, in using the apparatus **20** of the present invention, the conductors **26** are plugged into left and right connectors or jacks denoted symbolically by reference number **30** on a housing containing the circuitry and components of the base unit **22**. Left and right audio in-jack **30**, such as RCA audio in-jacks, are mounted on the base unit housing for receiving the cables **26**. A separate power jack, not shown, is also mounted on the housing of the base unit **22**.

The base unit **22** is also provided with a pair of left and right audio output jacks **32** only one of which is shown in FIG. **1**. Conductors **34** with plugs matable with the jacks or connectors **32** are connected between the jacks **32** and the speaker pair **28** for generating audio sounds from the audio source **10** at the location of the audio source **10**.

Although not shown, a stereo mini-input jack and stereo mini-output jack may also be mounted on the housing of the base unit **22** for receiving mini plug connectors attached to cables. A headphone jack may also be provided on the housing of the base unit **22** for connection to a portable receiver, such as a portable headphone.

As shown in the block diagram of FIG. **2** and in detail in FIGS. **4A** and **4B**, the base unit **22** is provided with DC power from DC storage batteries **36** or by a conventional AC/DC adapter **38** which is plugged into a AC power source, such as a building AC outlet. The DC power from either the AC adapter **38** or the batteries **36** are input to a regulated power supply **40**. A low battery indicator, such as an LED **42**, is connected to the regulated power supply **40** and is illuminated when battery power falls below a predetermined threshold level sufficient for operation of the base unit **22**.

An on/off pushbutton **44** is mounted on the housing of the base unit **22** for controlling the supply of power to the circuitry in the base unit **22**.

A five LED level meter **46** is also mounted on the housing of the base unit **22** to indicate the modulation of the receiving signal level. The modulation meter **46** is driven by a sample of the left and right channel signals via the connectors **30**R and **30**L through a summing circuit **48**. The user is able to adjust the modulation level by adjusting the volume of the audio sound produced by the computer sound generator card **16** until it is optimal, as indicated by the maximum number of illuminated LEDs on the modulation meter **46**. Four green LEDs are provided for sequential illumination on increasing modulation level, with a red LED provided for a no signal indication.

Finally, a channel select switch **50**, such as a slide switch or multi-position switch is switchable between four positions labeled Ch **1**, Ch **2**, Ch **3**, and Ch **4**. Each position has a red LED indicator **52**, **54**, **56**, and **58**, respectively, to indicate the selected channel.

The incoming left and right stereo signals on channels **30**L and **30**R are also passed to a stereo encoder circuit **60**. The stereo encoder circuit may be a conventional stereo modulator IC, such as one sold by New Japan Radio Co, Ltd., model no. NJM2035. Although other types of stereo encoder circuits may also be employed, the circuit **60** generally combines the left and right channel signals into a standard composite stereo format. A summing circuit **62** adds the left and right channel signals into a first signal. Another summing circuit **64** forms a second signal by subtracting the right and left channel signals, with the right channel signal phase shifted 180° from the left channel signal by a phase shift circuit **66**. The output of the summing circuit **64** is input to a balanced mixer **68** which has another input from a 38 KHz crystal oscillator **70**. The mixer **68** modulates the subtraction product of the summing circuit **64** onto a 38 KHz subcarrier frequency.

The 38 KHz output of the crystal oscillator **70** is halved by a divide by 2 circuit **72** to form a 19 KHz subcarrier frequency. This signal is passed through a 19 KHz bandpass filter **74** to produce a 19 KHz pilot signal. The output of the balanced mixer **68** is summed with the output of the summing circuit **62** in a summing circuit **76**. The output of the summing circuit **76** is passed through a low pass filter **78** and input to a summing circuit **80** to produce a multiplexed stereo signal. The output of the summing circuit **80** is processed by a limiter or automatic gain control circuit **82** and used to frequency modulate a first oscillator **84** which is preferably a 900 MHZ voltage controlled oscillator (VCO).

A channel select switch **50** having multiple positions is used to determine the center transmit frequency of the oscillator **84**. Each channel of the channel select switch **50** is connected to a discrete voltage thereby controlling the output frequency of the first oscillator **84**. For example, when Ch **1** is selected by the channel select switch **50**, the first oscillator **84** outputs a center frequency of 910.0 MHZ. Channels **2**, **3**, and **4** (Ch **2**, Ch **3**, and Ch **4**), when individually selected by the channel switch **50**, respectively control the first oscillator **84** to output a transmit center frequency of 910.2, 910.4, and 910.6 MHZ, respectively.

The output of the first oscillator **84** is amplified to an appropriate level by an RF power amplifier **86** and filtered in a 900 MHZ bandpass filter **88** to remove harmonics before passing to an antenna **90** for transmission to the remote unit **24**.

The output signal from the first oscillator **84** is impedance matched with the antenna **90** which may be a ¼ wave resonant monopole antenna tuned to the desired output frequency (900 MHZ or above). The antenna **90**, which is preferably permanently attached to the housing of the base unit **22**, radiates modulated high frequency radio waves at the selected 910.0–910.6 frequency to the remote unit **24**.

Although the above-identified circuitry which performs the function of the base unit **22** has been described as being a stand alone device separate from the audio source **10**, it will be understood that the circuitry or components employed in the base unit **22** may also be mounted on the sound generator card **16** in a computer comprising the audio source in the present example of the invention as well as on a separate circuit board mounted within the computer housing or on a computer motherboard itself.

Referring now to FIGS. **3**A and **3**B and to the detailed schematics of FIGS. **5**A, **5**B and **5**C, the 900 MHZ modulated ISM band signal from the base unit **22** is picked up at the remote unit **24** by an antenna **100**. The antenna **100** may also be a ¼ wave resonant monopole fixed to the housing of the receiver **24**. Other antenna types may also be employed for the antenna **100**.

The 900 MHZ modulated signal received by the antenna **100** is amplified by a low-noise RF amplifier **102**. The output of the amplifier **102** is combined with the output of a first local oscillator **104** in a first balanced mixer circuit **106**. The first mixer **106** provides two outputs, namely, the sum and the difference of the two input frequencies. The sum signal is attenuated by a 61 MHZ bandpass filter and amplifier circuit **108**. The filter and amplifier circuit **108** amplifies and passes the difference frequency of 61 MHZ to a second balanced mixer **110**.

The first oscillator **104** is preferably a digitally tuned voltage control oscillator (VCO). The first oscillator **104** is made to oscillate at a frequency that is 61 MHZ above the received frequency. For example, if the received frequency is 905 MHZ, the first oscillator operates at a frequency of 966 MHZ.

The amplified and filtered output of the first oscillator **104**, which is now at 61 MHZ, is mixed with the output of a second local oscillator **112** tuned to a 71.7 MHZ frequency in the second balanced mixer **110**. Again, the second balanced mixer **110** produces sum and difference outputs. The sum frequency of 132.7 MHZ (in the present example) is attenuated by a 10.7 MHZ ceramic filter **114**; while a difference frequency 10.7 MHZ is passed through the ceramic bandpass filter **114** as a 10.7 MHZ carrier frequency.

The 10.7 MHZ signal still maintains the audio frequency modulation that was transmitted by the base unit **22**. The signal has been simply "mixed down" from the 900 MHZ ISM band to 10.7 MHZ. This conversion from the 900 MHZ frequency to a 10.7 MHZ frequency avoids the use of modulation and demodulation circuits which impose imperfections into the transmitted signal. Converting the center transmit frequency rather than modulating and demodulating as in previous high frequency signal transmission systems utilizes less expensive retransmission circuitry thereby reducing the cost of the signal transmission device as well as providing better signal quality.

After passing through the ceramic filter **114**, the 10.7 MHZ modulated carrier signal is routed through a limiter amplifier **116** which not only provides substantial gain, but also removes variations in the amplitude of the carrier signal. Coupled to the output of the limiter amplifier **116** is a quadrature-type FM frequency detector **118** which produces a voltage that is proportional to the frequency of the 10.7 MHZ carrier signal. Specifically, the output voltage of the FM detector **118** is proportional to the composite stereo FM modulation that was applied to the 900 MHZ signal in the base unit **22**.

To recover the left and right channel stereo signals for output through an optional stereo headphone jack mounted on the housing of the remote unit **24**, as described hereafter, the output of the FM detector **118** is processed by a stereo decoder or integrated circuit **120**, such as a PLL FM multiplex demodulator sold by Sanyo as model no. LA3335M. The individual left and right audio signals from the stereo decoder **120** each pass through a separate 19 KHz low pass notch filter **122** and **124** in order to remove 19 KHz "pilot tone" used in decoding the composite stereo signal. Finally, the left and right audio signals pass through a stereo headphone amplifier **126** for output to a stereo headphone jack **128** mounted on the housing of the remote unit **24**. The amplifier **126**, in the preferred aspect of the present invention, employs an electronic volume control that enables the gain of both left and right channels to be adjusted with a separate volume control switch or knob **130** mounted on the remote unit **24**.

The stereo decoder **120** also has an output **121** that indicates successful detection of the 19 KHz pilot tone sent by the base unit **22**. This output is used to operate an indicator or LED **132** which works as a "stereo" or "valid signal received" indicator. If the pilot tone is not successfully decoded, an output **123** from the stereo decoder **120** is used to disable the transmitter of the remote unit **24** and mute the headphone audio output via a mute signal **134** coupled to the stereo headphone amplifier **126**. The remote transmitter and the headphones **129** return to normal operation once the pilot signal is successfully decoded or received.

The output of the FM detector **118**, as shown in FIG. **3**A, is also used for automatic frequency control (AFC). By running the output of the FM detector **118** through a low pass filter **140**, a signal is obtained that is proportional to the "center frequency" of the 10.7 MHZ carrier signal. If the first and/or second oscillator **104** and **112** drift off frequency, the 10.7 MHZ signal will also be different from the 10.7 MHZ center frequency. By determining the filtered or average FM detector output from the low pass filter **140**, it is possible to determine if the detected 10.7 MHZ signal frequency is too high or too low. This is accomplished in a window detector circuit **142** which compares the filtered FM detector output from the filter **140** with two reference voltages Vref**1** and Vref**2**. Vref**1** being slightly lower than nominal frequency and Vref**2** being slightly higher than nominal frequency. The window detector circuit **142** has two outputs that can be decoded to indicate whether the input voltage is below the lower reference frequency (Vref**1**), above the upper reference frequency (Vref**2**), or in the window "in between" the lower reference frequency and the upper reference frequency.

A controller or microcontroller **144** executes a stored program to accomplish this decoding. The microcontroller **144** outputs signals to a eight bit digital to analog converter **146** which is used to tune or adjust the frequency of the first local oscillator **104**. The controller **144** is programmed to make corrections to the frequency of the first local oscillator **104** as indicated by the decoded window detector **142** output

information. The objective is to maintain the output of the second mixer **110** at exactly 10.7 MHZ. When the remote unit **24** is first powered up, the controller **144** linearly increments the frequency of the first local oscillator **104** until the output of the second mixer **110** is exactly 10.7 MHZ as indicated by the output of the window detector **142**. After that, the software control program executed by the controller **144** simply maintains the frequency by incrementing up or decrementing down the magnitude of control signals supplied to the digital to analog converter **146** as indicated by the decoded output of the window detector **142**.

Since the window detector **142** is only useful within a certain neighborhood of the desired frequency, another detector **148** is also required for operation elsewhere. This other detector **148** is preferably a 19 KHz peak detector **148** which receives the output of the FM detector from a 19 KHz bandpass filter **149**. If the first and second local oscillators **104** and **112** are off frequency by a large amount, as indicated by a failure to detect the 19 KHz pilot tone sent by the base unit **22**, the controller **144** will simply start tuning the first local oscillator **104** up in frequency until the 19 KHz pilot tone is detected by the detector **148**. Once the pilot tone is detected, the controller **144** looks at the outputs of the window detector **142** to determine if the frequency is too far off and, if so, which direction the first local oscillator **104** must be tuned in order to correct the frequency. It should be noted that if the first local oscillator **104** is adjusted to the upper limit of a tuning range without locking onto the pilot tone signal, the first local oscillator **104** will simple wrap around and start ramping up from its lowest tunable frequency.

A pushbutton **150** labeled "AUTOSCAN" is optionally connected as an input to the controller **144**. The pushbutton **150** allows the operator to force a new "AUTOSCAN" when the microcontroller **144** increments the frequency of the first local oscillator **104** to fine tune the output frequency of the second balanced mixer **110** to the center 10.7 MHZ frequency. However, this push button **150** should seldom need to be used since the automatic fine tuning control circuit described above insures that the remote unit **24** will find the transmitted center frequency automatically.

The 10.7 MHZ signal output from the filter **114** still maintains the stereo frequency modulation that was transmitted by the base unit **22**. The stereo frequency modulation has simply been "mixed down" or "converted down" from the 900 MHZ band to 10.7 MHZ. Transmitter circuitry, described hereafter, in the remote unit **24** amplifies this modulated 10.7 MHZ signal, mixes it back up to the low end of the FM broadcast band, amplifies and filters it before transmitting or re-broadcasting the modulated signal carrying the stereo frequency modulation to a remote audio output device, such as a RF receiver.

The transmitter portion of the remote unit **24** includes a high gain limiter amplifier filter **154** tuned to 10.7 MHZ. The limiting action of the limiter amplifier **154** has the effect of making the transmitter output level largely independent of the strength of the signal received on the 900 MHZ band.

The limited 10.7 MHZ signal is next mixed in a balanced transmit mixer **156** with the output of a second oscillator **160**. Preferably, the second oscillator **160** is a crystal oscillator designed to operate at one of four difference frequencies as selected by the controller **144** via an input pushbutton **162** operated by the user. In response to each press of the pushbutton **162**, the controller **144** outputs signals on channel output lines selecting one of four difference crystals which are switched into the second oscillator **160** to make it operate 10.7 MHZ below of the available low end FM broadcast band frequencies of 88.1, 88.3, 88.5, and 88.7 MHZ. Individual FM band channel indicators **164**, such as LEDs, are coupled to each channel output line from the controller **144** to indicate the selected channel.

The output of the transmit mixer **156** includes once again of sum and difference outputs. This time, however, the sum term is of interest. For example, if the desired transmit channel is 88.1 MHZ, the operator selects the appropriate crystal, i.e., 77.4 MHZ, by an appropriate number of separate depressions or the channel pushbutton **162** until the desired transmit channel corresponding to 77.4 MHZ as shown by one output LED **164** is reached. The difference term output from the transmit mixer **156** is attenuated by a tuned 88 MHZ amplifier while the sum term output is amplified. This 88.1 modulated MHZ signal is then passed through a bandpass filter antenna matching network circuit **168** and applied to an FM broadcast band transmit antenna **170**. This signal which is broadcast at the low end of the FM broadcast band (88 MHZ) can be received using any standard FM broadcast band receiver (mono or stereo). If the receiver is a stereo receiver, it will reproduce the stereo program material. By way of example, the audio receiver or output device **12**, shown in FIG. **1**, which is capable of receiving the re-broadcasted transmit signal from the antenna **170** may be a conventional AM/FM stereo receiver, AM/FM radio or even a wireless headphone having demodulation circuitry mounted therein, similar to that described above for the stereo decoder **120** and headphone jack **128** mounted on the housing of the remote unit **24**.

As also shown in FIG. **3**B, electrical power to the remote unit **24** is provided through a conventional AC/DC adapter **172** or conventional storage batteries **174**. An on/off switch **176** is also mounted on the housing of the remote unit **24** to control the application of power to a regulated power supply **178** mounted within the housing of the remote unit **24**. A low battery indicator, such as a LED indicator **180**, is also mounted on the housing of the remote unit **24** to indicate when the battery level falls below a predetermined threshold sufficient for proper operation of the remote unit **24**.

Although the above description of the construction and operation of the base unit **22** and the remote unit **24** has been for the high frequency transmission and frequency down conversion of audio signals, it will be understood that the apparatus of the present invention with minimal alteration may also be utilized to transmit high frequency digital signals. For example, regardless of the signal format from the audio source **10**, the audio signals, whether in analog or digital form, are modulated onto the high frequency carrier signal and transmitted to the remote unit **24**. In the remote unit **24**, the incoming modulated signal can be retransmitted to the remote output device in one of two forms, namely, either in analog or digital format depending upon the nature of the output device.

If the output device, such as a television or AM/FM stereo receiver, is capable of receiving and demodulating digital signals, then the modulated digital signals received by the remote unit **24** can be merely transmitted at the new carrier frequency in the same manner as the incoming audio signal described above. If, however, the output device is capable of only generating audio signals from analog input, and the incoming modulated signals received by the remote unit **24** are in digital format, a digital to analog converter or codec can be employed, for example, between the output of the 61 MHZ bandpass filter/amplifier **108** and the second balanced mixer **110** in the remote unit **24**. In this manner, the digital signals are converted to analog form, but remain as a

modulated signal on the new down converted frequency which is then up converted and retransmitted by the remote unit **24** to the further remote output device as described above. Conversely, if the output device is only capable of generating output from digital input, a reverse or analog to digital converter or codec may be employed in the remote unit **24** to convert the incoming digital modulated signals to analog modulated signals.

Further, although audio signals have been described above as forming the output of the source **10**, the apparatus of the present invention is also capable of transmitting video signals via high frequency signal transmission in essentially the same manner as that described above. Video signals are typically in MTSC standard format and may have stereo audio accompaniment. For video signals, the video signals are transmitted on a 2.4 GHz carrier with the audio signals transmitted on a 38 MHZ subcarrier to the remote unit **24**.

The video signals are down converted by the remote unit **24** to a frequency band consistent with television or video broadcast format and then retransmitted to an output video device, such as a television, monitor, etc.

Referring now to FIG. **6**, there is depicted an alternate aspect of the present invention which includes a recording media or recorder **190**. The recorder **190** may be any suitable recording device capable of receiving, storing and re-outputting digital and/or analog signals representing either audio or visual source programs or data. For example, the recorder **190** may constitute a conventional video cassette recorder for storing video and audio signals in analog form. Alternately, the recorder **190** may be a digital memory device such as, for example, a Rio-MP3 minidisc player manufactured by Diamond Multimedia. The only change necessary to the remote unit **24** is the addition of an analog to digital converter or codec coupled to the output of stereo decoder **120** for converting audio signals to digital format. Of course, if the input signal stream is in digital format, the codec is not required. Alternately, the analog to digital conversion may take place directly in the recorder **190**.

The recorder **190** is also capable of outputting stored signals to the remote unit **24** upon receiving an input from a user, such as via a depression of a pushbutton or switch on the recorder **190** or remote unit **24** or upon receiving a signal from a remote source, such as the user's service provider assuming that a suitable Internet connection is made to either the recorder **190** or remote unit **24**. Once activated, the recorder **190** outputs the stored signal information to the remote unit **24** which then reconstitutes the signals as analog or digital signals depending upon the nature of the output device and modulates the signals via the second mixer **110** at a suitable subcarrier frequency such as 10.7 MHz subcarrier frequency for audio signals or at a 2.4 GHz frequency, using a different second oscillator, for video signals. In the case of combined video and audio signals, the audio signals are transmitted on a lower frequency subcarrier, such as 38 MHZ frequency, with the higher frequency video modulated signals. This signal stream is then transmitted through the transmitter section of the remote unit **24**, in the same manner as described above and shown in FIG. **3**B for audio signals, to the remote end device which has the capability to demodulate the received signals and generate appropriate video images and/or audio sounds.

It will also be understood that although the remote unit **24** and the recorder **190** are depicted as separate elements in FIG. **6**, the circuitry and elements of both the remote unit **24** and the recorder **190** may be combined into a single device, such as a modified remote unit having an internally mounted recorder.

In summary, there has been disclosed a unique wireless high frequency signal transmission apparatus capable of receiving audio and/or video signals from a suitable source, transmitting the received signals via a high frequency carrier to a remote receiver which in turn converts the modulated signals to a different frequency before retransmitting the modulated signals to a remote receiver capable of receiving and outputting the audio sounds or video images. The unique wireless transmission system of the present invention makes use of high frequency (900 MHz) carrier for transmissions to the remote unit and lower frequencies for transmissions from the remote unit to the end receiver. The present apparatus also provides multiple channel selection of both the high frequency and low frequency transmission signals thereby ensuring proper transmission of the signals despite any interference.

The high frequency transmission apparatus of the present invention makes unique use of a wireless connection between the remote unit and a further remote receiver thereby enabling the apparatus of the present invention to be employed in a completely different area of a building or home from the remote receiver. The apparatus of the present invention is also ideally suited for receiving streaming Internet broadcast media signals and then re-broadcasting the signals through the remote unit to a remote receiver which typically can be a user's stereo system, a pair of wireless headphones containing appropriate stereo demodulation circuitry a television, etc.

What is claimed is:

1. A wireless signal transmission apparatus for use with a signal source providing first frequency signals, the signal transmission apparatus comprising:

a first transmitter adapted to be coupled to the signal source for receiving first frequency signals, the first transmitter connected to a first antenna;

a first oscillator in the first transmitter producing a high frequency carrier signal;

means for combining the high frequency carrier signal with the first frequency signals to form a first modulated signal transmitted by the first antenna;

a first receiver remote from the first transmitter and connected to a second antenna for receiving the first modulated signal;

means coupled to the first receiver for converting the first modulated signal from the high frequency carrier signal of the first transmitter to a second modulated signal including a lower frequency carrier signal and the first frequency signals; and

a second transmitter, coupled to the converting means, for retransmitting the second modulated signal to a second receiver for generation of the first frequency signals.

2. The apparatus of claim **1** further comprising:

first selectable means, connected to the first oscillator, for generating one of a plurality of discrete carrier frequencies of at least 900 MHz.

3. A wireless signal transmission apparatus for use with a signal source providing first frequency signals, the signal transmission apparatus comprising:

a first transmitter adapted to be coupled to the signal source for receiving first frequency signals, the first transmitter connected to a first antenna;

a first oscillator in the first transmitter producing a high frequency carrier signal;

means for combining the high frequency carrier signal with the first frequency signals to form a first modulated signal transmitted by the first antenna;

a first receiver remote from the first transmitter and connected to a second antenna for receiving the first modulated signal;

means coupled to the first receiver for converting the first modulated signal from the high frequency carrier signal of the first transmitter to a second modulated signal including a lower frequency carrier signal and the first frequency signals;

a second transmitter, coupled to the converting means, for retransmitting the second modulated signal to a remote second receiver for generation of the first frequency signals; and

first selectable means, connected to the first oscillator, for generating one of a plurality of discrete carrier frequencies of at least 900 MHZ for the frequency carrier signals, the first selectable means including means for inputting one of a plurality of discrete voltages to the first oscillator.

4. The apparatus of claim **2** further comprising:

means for modulating the first frequency signals with the selected carrier frequency of the first oscillator to form the first modulated signal.

5. A wireless signal transmission apparatus for use with a signal source providing first frequency signals, the signal transmission apparatus comprising:

a first transmitter adapted to be coupled to the signal source for receiving first frequency signals, the first transmitter connected to a first antenna;

a first oscillator in the first transmitter producing a high frequency carrier signal;

means for combining the high frequency carrier signal with the first frequency signals to form a first modulated signal transmitted by the first antenna;

a first receiver remote from the first transmitter and connected to a second antenna for receiving the first modulated signal;

means coupled to the first receiver for converting the first modulated signal from the high frequency carrier signal of the first transmitter to a second modulated signal including a lower frequency carrier signal and the first frequency signals the lower frequency carrier signal being in the low end of the FM broadcast frequency band;

a second transmitter, coupled to the converting means, for retransmitting the second modulated signal to a remote second receiver for generation of the first frequency signals;

first selectable means, connected to the first oscillator, for generating one of a plurality of discrete carrier frequencies of at least 900 MHZ; and

means for modulating the first frequency signals with the selected carrier frequency of the first oscillator to form the first modulated signal for the high frequency carrier signal.

6. A wireless signal transmission apparatus for use with a signal source providing first frequency signals, the signal transmission apparatus comprising:

a first transmitter adapted to be coupled to the signal source for receiving first frequency signals, the first transmitter connected to a first antenna;

a first oscillator in the first transmitter producing a high frequency carrier signal;

means for combining the high frequency carrier signal with the first frequency signals to form a first modulated signal transmitted by the first antenna;

a first receiver remote from the first transmitter and connected to a second antenna for receiving the first modulated signal;

means coupled to the first receiver for converting the first modulated signal from the high frequency carrier signal of the first transmitter to a second modulated signal including a lower frequency carrier signal and the first frequency signals;

a second transmitter, coupled to the converting means, for retransmitting the second modulated signal to a remote second receiver for generation of the first frequency signals; and

first selectable means, connected to the first oscillator, for generating one of a plurality of discrete carrier frequencies of at least 900 MHZ for the frequency carrier signals;

the converting means converting the high frequency carrier signal of the first modulated signal to the lower frequency carrier signal of the second modulated signal in two frequency conversion steps.

7. A wireless signal transmission apparatus for use with a signal source providing first frequency signals, the signal transmission apparatus comprising:

a first transmitter adapted to be coupled to the signal source for receiving first frequency signals, the first transmitter connected to a first antenna;

a first oscillator in the first transmitter producing a high frequency carrier signal;

means for combining the high frequency carrier signal with the first frequency signals to form a first modulated signal transmitted by the first antenna;

a first receiver remote from the first transmitter and connected to a second antenna for receiving the first modulated signal;

means coupled to the first receiver for converting the first modulated signal from the high frequency carrier signal of the first transmitter to a second modulated signal including a lower frequency carrier signal and the first frequency signals the lower frequency carrier signal being in the low end of the FM broadcast frequency band;

a second transmitter, coupled to the converting means, for retransmitting the second modulated signal to a remote second receiver for generation of the first frequency signals;

first selectable means, connected to the first oscillator, for generating one of a plurality of discrete carrier frequencies of at least 900 MHZ for the high frequency carrier signal;

means for modulating the first frequency signals with the selected carrier frequency of the first oscillator to form the first modulated signal for the high frequency carrier signal; and

means for converting the lower frequency carrier signal to transmit a frequency carrier signal supplied to the second transmitter.

8. A wireless signal transmission apparatus for use with a signal source providing first frequency signals, the signal transmission apparatus comprising:

a first transmitter adapted to be coupled to the signal source for receiving first frequency signals, the first transmitter connected to a first antenna;

a first oscillator in the first transmitter producing a high frequency carrier signal;

means for combining the high frequency carrier signal with the first frequency signals to form a first modulated signal transmitted by the first antenna;

a first receiver remote from the first transmitter and connected to a second antenna for receiving the first modulated signal;

means coupled to the first receiver for converting the first modulated signal from the high frequency carrier signal of the first transmitter to a second modulated signal including a lower frequency carrier signal and the first frequency signals the lower frequency carrier signal being in the low end of the FM broadcast frequency band;

a second transmitter, coupled to the converting means, for retransmitting the second modulated signal to a remote second receiver for generation of the first frequency signals;

first selectable means, connected to the first oscillator, for generating one of a plurality of discrete carrier frequencies of at least 900 MHZ for the high frequency carrier signal;

means for modulating the first frequency signals with the selected carrier frequency of the first oscillator to form the first modulated signal for the high frequency carrier signal, and

the first receiver including:

a second oscillator coupled to the first receiver for converting the carrier frequency of the first modulated signal to a converted lower frequency carrier signal; and

frequency control means including:

means for detecting the second frequency signal in the first modulated signal, the detecting means generating an output upon detecting the first frequency signal;

means, responsive to the output of the detecting means, for generating a signal proportional to the center frequency of the converted lower frequency carrier signal;

means, responsive to the signal proportional to the center frequency, for determining one of a high or low status of the center frequency relative to a nominal center frequency, the means generating an output corresponding to the determined one of the high or low status of the center frequency; and

a controller, responsive to the output, for adjusting the frequency of the second oscillator until the output of the detecting means is proportional to the nominal center frequency.

9. The apparatus of claim **8** further comprising:

a third oscillator coupled to the first transmitter for generating a pilot carrier frequency signal;

means for modulating the pilot carrier frequency signal with the first frequency signal and the high frequency carrier signal into the first modulated signal for transmission by the first transmitter to the first receiver;

means, in the first receiver, for detecting the pilot carrier frequency signal and generating an output upon detecting the pilot carrier frequency signal; and

the controller, in response to the absence of the pilot carrier frequency signal, step-wise advancing the output frequency of the first oscillator until the pilot carrier frequency signal is detected.

10. The apparatus of claim **1** further comprising:

second selectable means, coupled to first remote receiver, for generating one of a plurality of discrete second carrier frequencies from a second oscillator coupled to the second transmitter.

11. The apparatus of claim **10** further comprising:

a second oscillator coupled to the first receiver for converting the carrier frequency of the first modulated signal to a lower frequency carrier signal.

12. A wireless signal transmission apparatus for use with a signal source providing first frequency signals, the signal transmission apparatus comprising:

a first transmitter adapted to be coupled to the signal source for receiving first frequency signals, the first transmitter connected to a first antenna;

a first oscillator in the first transmitter producing a high frequency carrier signal;

means for combining the high frequency carrier signal with the first frequency signals to form a first modulated signal transmitted by the first antenna;

a first receiver remote from the first transmitter and connected to a second antenna for receiving the first modulated signal;

means coupled to the first receiver for converting the first modulated signal from the high frequency carrier signal of the first transmitter to a second modulated signal including a lower frequency carrier signal and the first frequency signals;

a second transmitter, coupled to the converting means, for retransmitting the second modulated signal to a remote second receiver for generation of the first frequency signals; and

second selectable means, coupled to first remote receiver, for generating one of a plurality of discrete second carrier frequencies from a second oscillator coupled to the second transmitter, the second selectable means including means for selecting one of a plurality of crystals, each enabling the second oscillator to oscillate at a discrete frequency.

13. The apparatus of claim **1** wherein the first receiver comprises:

a second receiver for demodulating the second modulated signal.

14. The apparatus of claim **13** wherein the second receiver is a radio frequency receiver.

15. The apparatus of claim **13** wherein the second receiver is a pair of wireless audio headphones.

16. The apparatus of claim **1** wherein the signal source comprises a computer generated audio signal stream.

17. A wireless signal transmission apparatus for use with a signal source formed of at least one of a CD player, RF audio receiver, AM/FM tuner, and AM/FM stereo receiver and providing first frequency signals, the signal transmission apparatus comprising:

a first transmitter adapted to be coupled to the signal source for receiving first frequency signals, the first transmitter connected to a first antenna;

a first oscillator in the first transmitter producing a high frequency carrier signal;

means for combining the high frequency carrier signal with the first frequency signals to form a first modulated signal transmitted by the first antenna;

a first receiver remote from the first transmitter and connected to a second antenna for receiving the first modulated signal;

means coupled to the first receiver for converting the first modulated signal from the high frequency carrier signal of the first transmitter to a second modulated signal

including a lower frequency carrier signal and the first frequency signals;

a second transmitter, coupled to the converting means, for retransmitting the second modulated signal to a remote second receiver for generation of the first frequency signals.

18. A wireless signal transmission apparatus for use with a signal source providing first frequency signals, the signal transmission apparatus comprising:

the signal source including streaming media signals received through Internet communication from the signal source by a central processor, including at least one of a sound generator circuit coupled to the central processor for generating audio frequency signals from a central processor output, and a video generator circuit coupled to the central processor for generating video images from a central processor output;

a first transmitter adapted to be coupled to the signal source for receiving first frequency signals, the first transmitter connected to a first antenna;

a first oscillator in the first transmitter producing a high frequency carrier signal;

means for combining the high frequency carrier signal with the first frequency signals to form a first modulated signal transmitted by the first antenna;

a first receiver remote from the first transmitter and connected to a second antenna for receiving the first modulated signal;

means coupled to the first receiver for converting the first modulated signal from the high frequency carrier signal of the first transmitter to a second modulated signal including a lower frequency carrier signal and the first frequency signals; and

a second transmitter, coupled to the converting means, for retransmitting the second modulated signal to a remote second receiver for generation of the first frequency signals.

19. A wireless signal transmission apparatus for use with a signal source providing first frequency signals, the signal transmission apparatus comprising:

a first transmitter adapted to be coupled to the signal source for receiving first frequency signals, the first transmitter connected to a first antenna;

a first oscillator in the first transmitter producing a high frequency carrier signal;

means for combining the high frequency carrier signal with the first frequency signals to form a first modulated signal transmitted by the first antenna;

a first receiver remote from the first transmitter and connected to a second antenna for receiving the first modulated signal;

means coupled to the first receiver for converting the first modulated signal from the high frequency carrier signal of the first transmitter to a second modulated signal including a lower frequency carrier signal and the first frequency signals;

a second transmitter, coupled to the converting means, for retransmitting the second modulated signal to a remote second receiver for generation of the first frequency signals; and

recording means, coupled to the first receiver, for demodulating the first modulated signal transmitted by the first transmitter and for recording the first frequency signals of the first modulated signal, the recording means further including means for outputting the recorded first frequency signals to the converting means for transmission by the second transmitter.

20. The signal transmission apparatus of claim **1** further comprising:

the converting means converting the first modulated signal from the high frequency carrier signal to an initial second modulating signal including a first lower frequency carrier signal and the first frequency signals and then converting the first lower frequency carrier signal to a second yet lower frequency carrier signal; and

the converting means converting the second lower frequency carrier signal to an intermediate frequency carrier signal within the FM frequency band.

21. The signal transmission apparatus of claim **20** further comprising:

the second transmitter, responsive to the converting means, for up-converting the second lower frequency carrier signal to the intermediate frequency carrier signal within the FM frequency band before retransmitting the second modulated signal.

22. A wireless signal transmission apparatus for use with a signal source providing first frequency signals, the signal transmission apparatus comprising:

a first transmitter adapted to be coupled to the signal source for receiving first frequency signals, the first transmitter connected to a first antenna;

a first oscillator in the first transmitter producing a high frequency carrier signal;

means for combining the high frequency carrier signal with the first frequency signals to form a first modulated signal transmitted by the first antenna;

a first receiver remote from the first transmitter and connected to a second antenna for receiving the first modulated signal;

means, coupled to the first receiver, for converting the first modulated signal from the high frequency carrier signal of the first transmitter to a second modulated signal including a lower frequency carrier signal and the first frequency signals;

means for automatically correcting the converted frequency of the lower frequency carrier signal with respect to errors in the high frequency carrier signal of the first modulated signal; and

a second transmitter, coupled to the converting means, for retransmitting the second modulated signal to a second receiver for generation of the first frequency signals.

* * * * *