Modulated Coding for Intersymbol Interference Channels

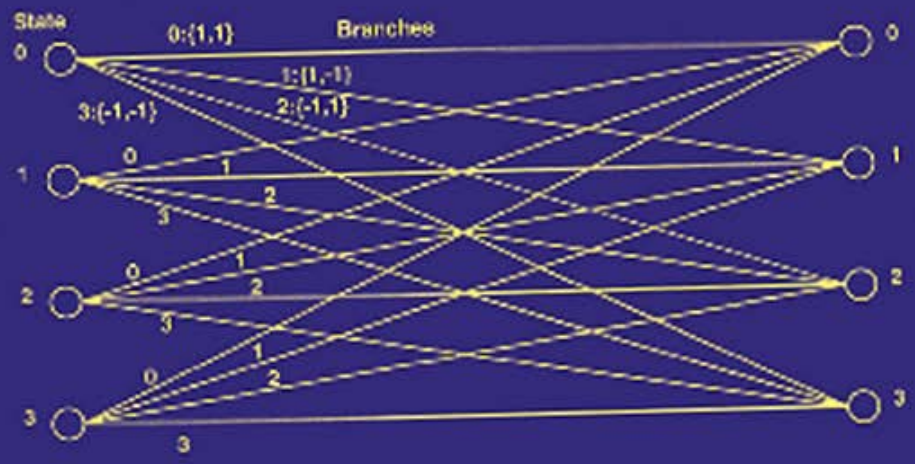

XIANG-GEN XIA

One-E-Way Exhibit 2019
Samsung Electronics Co., Ltd. et al. v. One-E-Way, Inc.
IPR2025-01516

Signal Processing and Communications Series

Modulated Coding for Intersymbol Interference Channels

One-E-Way Exhibit 2019
Samsung Electronics Co., Ltd. et al. v. One-E-Way, Inc.
IPR2025-01516

Signal Processing and Communications

Series Editor

K. J. Ray Liu
University of Maryland
College Park, Maryland

Editorial Board
Sadaoki Furui, *Tokyo Institute of Technology*
Yih-Fang Huang, *University of Notre Dame*
Aggelos K. Katsaggelos, *Northwestern University*
Mos Kaveh, *University of Minnesota*
P. K. Raja Rajasekaran, *Texas Instruments*
John A. Sorenson, *Technical University of Denmark*

1. Digital Signal Processing for Multimedia Systems, *edited by Keshab K. Parhi and Takao Nishitani*
2. Multimedia Systems, Standards, and Networks, *edited by Atul Puri and Tsuhan Chen*
3. Embedded Multiprocessors: Scheduling and Synchronization, *Sundararajan Sriram and Shuvra S. Bhattacharyya*
4. Signal Processing for Intelligent Sensor Systems, *David C. Swanson*
5. Compressed Video over Networks, *edited by Ming-Ting Sun and Amy R. Riebman*
6. Modulated Coding for Intersymbol Interference Channels, *Xiang-Gen Xia*
7. Digital Speech Processing, Synthesis, and Recognition: Second Edition, Revised and Expanded, *Sadaoki Furui*

Additional Volumes in Preparation

Modern Digital Halftoning, *David L. Lau and Gonzalo R. Arce*

Blind Equalization and Identification, *Zhi Ding and Ye (Geoffrey) Li*

Video Coding for Wireless Communications, *King H. Ngan, Chu Yu Yap, and Keng T. Tan*

Modulated Coding for Intersymbol Interference Channels

Xiang-Gen Xia
University of Delaware
Newark, Delaware

MARCEL DEKKER, INC. NEW YORK • BASEL

Library of Congress Cataloging-in-Publication Data

Xia, Xiang-gen

Modulated coding for intersymbol interference channels / Xiang-gen Xia.
p. cm. – (Signal processing ; 6)
Includes bibliographical references and index.
ISBN 0-8247-0459-2 (alk. paper)
1. Signal processing. 2. Coding theory. 3. Modulation (Electronics) 4. Electromagnetic interference. I. Title. II. Signal processing (Marcel Dekker, Inc.) ; 6.

TK5102.92 .X53 2000
621.382'2—dc21

00-060174

This book is printed on acid-free paper.

Headquarters
Marcel Dekker, Inc.
270 Madison Avenue, New York, NY 10016
tel: 212-696-9000; fax: 212-685-4540

Eastern Hemisphere Distribution
Marcel Dekker AG
Hutgasse 4, Postfach 812, CH-4001 Basel, Switzerland
tel: 41-61-261-8482; fax: 41-61-261-8896

World Wide Web
http://www.dekker.com

The publisher offers discounts on this book when ordered in bulk quantities. For more information, write to Special Sales/Professional Marketing at the headquarters address above.

Copyright © 2001 by Marcel Dekker, Inc. All Rights Reserved.

Neither this book nor any part may be reproduced or transmitted in any form or by any means, electronic or mechanical, including photocopying, microfilming, and recording, or by any information storage and retrieval system, without permission in writing from the publisher.

Current printing (last digit):
10 9 8 7 6 5 4 3 2 1

PRINTED IN THE UNITED STATES OF AMERICA

Series Introduction

Over the past 50 years, digital signal processing has evolved as a major engineering discipline. The fields of signal processing have grown from the origin of fast Fourier transform and digital filter design to statistical spectral analysis and array processing, and image, audio, and multimedia processing, and shaped developments in high-performance VLSI signal processor design. Indeed, there are few fields that enjoy so many applications—signal processing is everywhere in our lives.

When one uses a cellular phone, the voice is compressed, coded, and modulated using signal processing techniques. As a cruise missile winds along hillsides searching for the target, the signal processor is busy processing the images taken along the way. When we are watching a movie in HDTV, millions of audio and video data are being sent to our homes and received with unbelievable fidelity. When scientists compare DNA samples, fast pattern recognition techniques are being used. On and on, one can see the impact of signal processing in almost every engineering and scientific discipline.

Because of the immense importance of signal processing and the fast-growing demands of business and industry, this series on signal processing serves to report up-to-date developments and advances in the field. The topics of interest include but are not limited to the following:

- Signal theory and analysis
- Statistical signal processing
- Speech and audio processing
- Image and video processing
- Multimedia signal processing and technology
- Signal processing for communications
- Signal processing architectures and VLSI design

I hope this series will provide the interested audience with high-quality, state-of-the-art signal processing literature through research monographs, edited books, and rigorously written textbooks by experts in their fields.

K. J. Ray Liu

Preface

Intersymbol interference (ISI) mitigation has been an active research area for the last several decades and has played an important role in improving the performance of communication systems. There are mainly two classes of ISI mitigation methods, namely post equalization methods and transmitter assisted equalization methods. The method introduced in this book belongs to the second class. The goal of this book is to introduce modulated codes (MC) for ISI mitigation, recently proposed by the author.

The most results in this book were obtained by my research group in the last few years at the Communications Laboratory, Department of Electrical and Computer Engineering, University of Delaware. The following people in the group have contributed to the results: Pingyi Fan, Weifeng Su, Genyuan Wang, Kai Xiao, Qian Xie, Yong-Jun Alan Zhang, and Guangcai Zhou. Some of the results in this book were also summarized from my joint work with Professor Hui Liu at the Department of Electrical Engineering, University of Washington.

MC encoding and decoding are of three different types: case (i) both encoding and decoding have the ISI channel information; case (ii) neither of the encoding nor decoding has the ISI channel information; and case (iii) encoding does not have the ISI channel information but decoding has the ISI channel information. Case (i) is further split into two subcases: case (i.1) encoding depends on the input information signal constellation; case (i.2) encoding does not depend on the input information signal constellation. All these cases are addressed in this book and organized as follows.

In Chapter 1, we briefly introduce the current ISI mitigation methods, in particular, the methods in the second class as previously mentioned. We also formulate the capacity and the information rates of an ISI channel.

In Chapter 2, we introduce MC and some basic concepts similar to the conventional convolutional codes defined on finite fields. We describe the combination of an MC and an ISI channel. We also introduce and study the coding gain of an MC in an ISI channel compared to the uncoded additive white Gaussian noise (AWGN) channel. Some coding gain results are presented. The results in this chapter are for case (i.1), where the channel information and the input signal constellation are used.

In Chapter 3, we introduce the joint maximum-likelihood sequence estimation (MLSE) encoding and decoding of an MC coded ISI channel. For the MC performance analysis, we introduce the error-pattern trellis and present a spectrum distance calculation algorithm by extending the known bidirectional searching algorithm. We also present an algorithm to search for the optimal MC given an ISI channel. The results in this chapter are also for case (i.1).

In Chapter 4, we introduce some suboptimal MC design results given an ISI channel, which are of case (i.2), i.e., the signal constellation is not needed. The advantage over the design in Chapter 3 is its simplicity. In particular, we introduce MC coded ZF-DFE and MMSE-DFE and their corresponding optimal MC designs. Another suboptimal MC design is also introduced to optimally convert an ISI channel with AWGN into an ISI-free AWGN channel.

In Chapter 5, we study the capacity and information rates of an MC coded ISI channel with AWGN. We show that for any finite tap ISI channel there exist MC such that the MC coded ISI channel has higher information rates than the original ISI channel does at low channel signal-to-noise ratio (SNR). This implies that the achievable transmission data rates of the MC coded ISI channel may be higher than those of the original ISI channel. We introduce a joint turbo and MC encoding and decoding for an ISI channel, which may achieve performance above the AWGN channel capacity at low channel SNR.

In Chapter 6, we extend the MC results to space-time MC encoding and decoding for multiple transmit and multiple receive antenna systems.

In Chapter 7, we study a channel-independent MC coded orthogonal frequency division multiplexing (OFDM) system, which belongs to case (iii), i.e., the MC encoding does not need the ISI channel information while the decoding needs to know the ISI channel. We show that the MC coded OFDM channels may be robust to spectral null and frequency-selective multipath fading channels. We also introduce vector OFDM systems that can be used to reduce the cyclic prefix length over conventional OFDM systems.

In Chapter 8, we study polynomial ambiguity resistant MC (PARMC), which belongs to case (ii), i.e., neither the MC encoding nor the MC decoding needs to know the ISI channel. It is proved that it is necessary and sufficient for an MC to be PARMC for the blind identifiability at the receiver. A block MC is not a PARMC. In this chapter, we also introduce an algebraic blind identification algorithm. Note that PARMC applies to both single antenna and multiple antenna systems. For multiple antenna systems, PARMC may be used as space-time coding.

In Chapter 9, we characterize and construct PARMC by providing the canonical forms.

In Chapter 10, we introduce an optimal criterion for the PARMC design. Although in theory any PARMC is sufficient for canceling an ISI channel, it may have a performance difference when there is additive noise. The optimality studied in this chapter is for the resistance of channel additive noise.

In the last chapter, Chapter 11, we present some conclusions and propose a few important open problems on MC for ISI channels.

Acknowledgments

Most results described in this book were from my research supported by the Air Force Office of Scientific Research (AFOSR), the National Science Foundation (NSF), and the University of Delaware Research Foundation. I am indebted to Dr. Jon Sjogren at AFOSR and Dr. John Cozzens at NSF for their support of my research projects on modulated coding and filterbank precoding.

I would like to take this opportunity to thank the series editor, Prof. K. J. Ray Liu, for including this book in his Signal Processing and Communications Series. I thank Mr. B. J. Clark, Executive Editor of Marcel Dekker, Inc., for his coordination of the effort, and the Book Editorial Department of Marcel Dekker, Inc., for their editorial help.

I am grateful to Prof. Gonzalo Arce (University of Delaware), Prof. Zhi Ding (University of Iowa), Prof. Yingbo Hua (University of Melbourne), Prof. Lang Tong (Cornell University), Prof. P. P. Vaidyanathan (California Institute of Technology), Prof. Guanghan Xu (University of Texas at Austin), Prof. Zhen Zhang (University of Southern California), and Prof. Michael Zoltowski (Purdue University at West Lafayette) for their valuable discussions and encouragement in my research on modulated coding and filterbank precoding.

I wish to give special thanks to Prof. Hui Liu at University of Washington for collaboration on some of the results included in this book, in particular the PARMC part in Chapter 8.

I am grateful to current and former postdoctoral researchers, Pingyi Fan, Genyuan Wang, and Guangcai Zhou, and graduate students, Weifeng Su, Kai Xiao, Qian Xie, and Yong-Jun Alan Zhang, for their participation and contribution of research results included in this book.

Finally, I would like to thank my wife, Rong Zhang, for her support and understanding during this project and throughout my research.

Xiang-Gen Xia

Contents

Series Introduction (K. J. Ray Liu) v

Preface vii

1 Introduction 1
- 1.1 Post Equalizations 2
- 1.2 Transmitter Assisted Equalizations 2
  - 1.2.1 TH Precoding 3
  - 1.2.2 Modulated Coding and Vector Coding 4
- 1.3 Information Rates and Capacity of an ISI Channel with AWGN 5
- 1.4 Some Notations 7

2 Modulated Codes: Fundamentals and Coding Gain 9
- 2.1 Modulated Codes 9
- 2.2 Coding Gain in AWGN Channel 11
- 2.3 MC Combined with an ISI Channel 13
- 2.4 Coding Gain in ISI Channels 20
- 2.5 More Results on Coding Gain 26
  - 2.5.1 Existence of Rate $2/\Gamma$ MC with Coding Gain 26
  - 2.5.2 Some Sufficient Conditions on the Existence of Higher Rate Block MC with Coding Gain 33
  - 2.5.3 A Method on the Rate Estimation of MC with Coding Gain 39
  - 2.5.4 Lower and Upper Bounds on the Coding Gain . . . 44

3 Joint Maximum-Likelihood Encoding and Decoding 49
- 3.1 Performance Analysis of MC 49
- 3.2 A Method for Computing the Distance Spectrum of Modulated Codes 52
  - 3.2.1 Error-Pattern Trellis 53

3.2.2 Distance Spectrum and Bidirectional Searching Algorithm . . . 57
3.3 Simulation Examples . . . 61
3.4 An Algorithm for Searching the Optimal MC Given an ISI Channel . . . 66

4 Modulated Code Coded Decision Feedback Equalizer 71
4.1 MC Coded Zero-Forcing DFE . . . 71
4.1.1 Performance Analysis . . . 73
4.1.2 The Optimal MC Design . . . 76
4.1.3 Some Simulation Results . . . 78
4.2 MC Coded Minimum Mean Square Error DFE . . . 85
4.2.1 Optimal Decision-Delay and Coefficients of an MC Coded MMSE-DFE . . . 85
4.2.2 Optimal Block MC for MC Coded MMSE-DFE . . . 90
4.2.3 Simulation Results . . . 90
4.3 An Optimal MC Design Converting ISI Channel into ISI-Free Channel . . . 94
4.3.1 An Optimal Modulated Code Design . . . 95
4.3.2 A Sub-optimal Modulated Code Design . . . 98
4.3.3 Delayed Design . . . 102
4.3.4 Some Simulation Results . . . 102

5 Capacity and Information Rates for Modulated Code Coded Intersymbol Interference Channels 111
5.1 Some Lower Bounds of Capacity and Information Rates . . 112
5.2 MC Existence with Increased Information Rates . . . 114
5.3 Numerical Results . . . 119
5.4 Combined Turbo and MC Coding . . . 122
5.4.1 Joint Turbo and Modulated Code Encoding . . . 123
5.4.2 Joint Soft Turbo and MC Decoding . . . 123
5.4.3 Simulation Results . . . 125

6 Space-Time Modulated Coding for Memory Channels 129
6.1 Channel Model and Space-Time MC . . . 130
6.2 Space-Time MC Coded ZF-DFE . . . 132
6.2.1 MC Coded ZF-DFE and Performance Analysis . . . 132
6.2.2 The Optimal Space-Time MC Design . . . 137
6.3 Capacity and Information Rates of the Space-Time MC Coded MIMO Systems . . . 140
6.3.1 Capacity and Information Rates of MIMO Systems without MC Encoding . . . 140

6.3.2 Capacity and Information Rates of the Space-Time MC Coded MIMO Systems 141
6.4 Numerical Results 148

7 Modulated Code Coded Orthogonal Frequency Division Multiplexing Systems 153
7.1 OFDM Systems for ISI Channels 154
7.2 General MC Coded OFDM Systems for ISI Channels 157
7.3 Channel Independent MC Coded OFDM System for ISI Channels 163
7.3.1 A Special MC 163
7.3.2 An Example 165
7.3.3 Performance Analysis of MC Coded OFDM Systems for ISI Channels 167
7.3.4 Vector OFDM Systems 169
7.3.5 Numerical Results 170
7.4 Channel Independent MC Coded OFDM System for Frequency-Selective Fading Channels 172
7.4.1 Performance Analysis 173
7.4.2 Simulation Results 177

8 Polynomial Ambiguity Resistant Modulated Codes for Blind ISI Mitigation 185
8.1 PARMC: Definitions 187
8.2 Basic Properties and a Family of PARMC 188
8.3 Applications in Blind Identification 194
8.3.1 Blind Identifiability 194
8.3.2 An Algebraic Blind Identification Algorithm 197
8.4 Applications in Communication Systems 200
8.4.1 Applications in Single-Receiver, Baud-Rate Sampled Systems 201
8.4.2 Applications in Undersampled Antenna Array Receiver Systems 203
8.5 Numerical Examples 208
8.5.1 Single Antenna Receiver with Baud Sampling Rate . 208
8.5.2 Undersampled Antenna Array Receivers 211

9 Characterization and Construction of Polynomial Ambiguity Resistant Modulated Codes 213
9.1 PAR-Equivalence and Canonical Forms for Irreducible Polynomial Matrices 213
9.2 (Strong) rth PARMC with $N > K$ 219

9.3 (Strong) rth PARMC with $N = K + 1$ 224

10 An Optimal Polynomial Ambiguity Resistant Modulated Code Design **231**
10.1 A Criterion for PARMC Design 231
10.2 Optimal Systematic PARMC 236
10.3 Numerical Examples 238

11 Conclusions and Some Open Problems **243**

A Some Fundamentals on Multirate Filterbank Theory **247**
A.1 Some Basic Building Blocks 247
A.1.1 Decimator and Expander 248
A.1.2 Noble Identities 249
A.1.3 Polyphase Representations 250
A.2 M-Channel Multirate Filterbanks 251
A.2.1 Maximally Decimated Multirate Filterbanks: Perfect Reconstruction and Aliasing Component Matrix . . 252
A.2.2 Maximally Decimated Multirate Filterbanks: Perfect Reconstruction and Polyphase Matrix 254
A.3 Perfect Reconstruction FIR Multirate Filterbank Factorization and Construction 257
A.3.1 Factorization of FIR Polyphase Matrices with FIR Inverses 257
A.3.2 Factorization of Paraunitary FIR Matrix Polynomials 260
A.3.3 Perfect Reconstruction Multirate Filterbank Design 262
A.4 DFT and Cosine Modulated Filterbanks 263
A.4.1 DFT Filterbanks 263
A.4.2 Cosine Modulated Filterbanks 265

Bibliography **267**

Index **285**

Modulated Coding for Intersymbol Interference Channels

Chapter 1

Introduction

Intersymbol interference (ISI) may occur in wireline systems, such as telephone systems; storage systems , such as magnetic recording systems; and wireless systems , such as cellular systems . To improve the performance of a communication system, ISI mitigation is one of the most important tasks, which has been an active research area for several decades. An ISI channel is usually described as

$$y_a(t) = \sum_n x_a(t - \tau_n)h(n) + \eta_a(t), \tag{1.0.1}$$

where $x_a(t)$ and $y_a(t)$ are transmitted and received signals, respectively, $h(n)$ is the ISI channel impulse response, and $\eta_a(t)$ is the additive noise. For a band-limited channel with bandwidth W, the above continuous-time ISI channel can be rewritten as the following discrete linear time invariant (LTI) system

$$y(k) = \sum_n x(k - n)h(n) + \eta(k), \tag{1.0.2}$$

where $x(n) = x_a(nT_s)$, $y(n) = y_a(nT_s)$, and $\eta(n) = \eta_a(nT_s)$ and $T_s \leq 1/(2W)$. Throughout this book, we adopt the ISI channel model (1.0.2) with additive white Gaussian noise (AWGN) $\eta(n)$. The goal of ISI mitigation is to recover the transmitted signal $x(n)$ from the received signal $y(n)$. All ISI mitigation techniques can be categorized into two classes: post equalizations and transmitter assisted equalizations.

1.1 Post Equalizations

In post equalizations, the transmitter does not do anything for the ISI channel and the equalization is purely implemented at the receiver and therefore, one advantage of the post equalization technique is that the transmitter does not need to have the ISI channel information. There have been many post equalization techniques. They are mainly linear equalizers, such as zero-forcing (ZF) equalizers [93] and minimum mean square error (MMSE) equalizers; nonlinear equalizers, such as decision feedback equalizers (DFE) [10, 12, 107]; maximum-likelihood sequence estimation (MLSE) [68]; fractionally spaced equalizers [20, 137, 54]; and blind equalizations/blind system identification [117, 55, 120, 58, 52, 34, 33, 134, 135, 90, 180, 128, 136, 35, 79, 80, 83, 82, 63, 1, 64, 147, 81, 98, 123, 101, 183, 92, 36, 161]. The linear equalizers may enhance the noise and therefore do not perform well for the ISI channels with spectral nulls while the DFE have much better performance but present the difficulty in combining with the existing forward error correction coding. Since this class of equalizations is not the focus of this book, we refer the reader to [76, 108, 127] for more detailed studies on these equalizers.

1.2 Transmitter Assisted Equalizations

In transmitter assisted equalizations, the transmitter does do something to help ISI mitigation, where the transmitter may or may not need the complete ISI channel information. There also have been many transmitter assisted equalization techniques, such as joint convolutional/trellis coded equalization, [11, 7, 187, 22, 182, 28, 29]; Tomlinson-Harashima (TH) precoding [133, 57]; trellis precoding [41, 69]; vector coding [72, 5, 30], and other precoding techniques [74, 155]; prefiltering [48] and partial response signaling (PRS), such as [159, 114, 115]; and OFDM systems [27, 24, 18, 25]. Modulated coding in this book belongs to this class of equalization techniques. Although in OFDM systems the transmitter does not need the ISI channel information, the other transmitter assisted techniques do need the complete ISI channel information. In the joint convolutional/trellis coded equalization, such as [7, 187], and also trellis precoding [41, 69], the coding part is over a finite field and hard to combine with an arbitrary ISI channel although some optimality is possible for some special ISI channels, such as partial response channels in magnetic recording systems. Since TH precoding is one of the earliest and accepted precoding techniques, we next examine it in more detail.

1.2.1 TH Precoding

TH precoding basically erases the ISI channel at the transmitter by using finite information symbol characteristics. A block diagram is shown in Fig.1.1, where $H(z)$ is the z-transform of the ISI channel and the pulse amplitude modulation (PAM) with M symbols is used for the binary-to-complex mapping at the transmitter. The input data symbols $s(k)$ take the symbols of $-M+1, -M+3, ..., -1, 1, 3, ..., M-1$. The precoded symbol $x(k)$ for the transmission is a *real value* in the interval $(-M, M]$:

$$x(k) = s(k) - v(k) + 2Mi(k), \tag{1.2.1}$$

where $i(k)$ is an integer such that $-M < x(k) \leq M$. From (1.2.1), the received signal $y(k)$ with its z-transform $Y(z)$ is

$$Y(z) = S(z) + 2MI(z) + \eta(z), \tag{1.2.2}$$

where $S(z)$ and $I(z)$ are the z-transforms of $s(n)$ and $i(n)$, respectively. After the $2M$ modulo operation at the receiver, the ambiguity part $2MI(z)$ in the received signal is removed but the additive noise $\eta(k)$ is folded by the modulo operation. The final decoded signal is the M PAM demodulated one from $a(k) + \eta_M(k)$ where $\eta_M(k) = \eta(k) \bmod 2M$. In other words, the AWGN after the TH precoding and the decoding is folded into $(-M, M]$, which may affect the decoding performance when M is not large. Therefore, when the channel signal-to-noise (SNR) ratio is low and small PAM is used, the TH precoding may not perform well, although the TH precoding and the DFE techniques may approach the ISI capacity at high channel SNR [107].

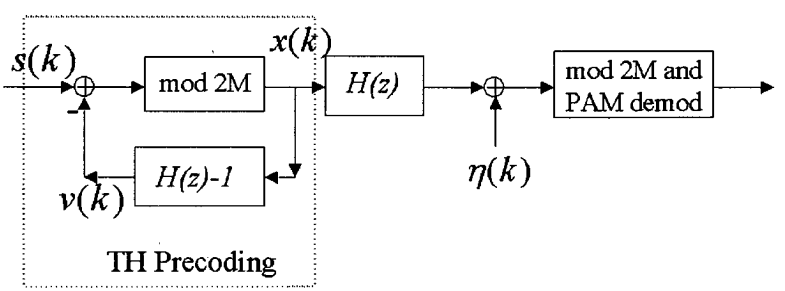

Figure 1.1: TH precoding.

The TH precoding and other prefiltering do not introduce redundancy to transmitted signals, except in the case of vector coding [72, 5] where zeros

are inserted between the blocks of the information symbols such that there is no ISI between blocks. What we want to especially point out here is that the PRS and the prefiltering [159, 114, 115, 48], which has no redundancy introduced, are LTI filtering over the complex field.

1.2.2 Modulated Coding and Vector Coding

Modulated coding (MC) recently studied in [165, 164, 170, 178, 167, 168, 45, 166, 44, 176, 179, 185, 89, 88, 171, 186, 163, 172] is an error correction coding (ECC), in particular a convolutional coding, defined on the real/complex field. In comparison with the current coded modulation scheme for ECC over a finite field, an MC has the encoding scheme shown in Fig.1.2 over the complex field. Since the arithmetic operations of an ISI channel are also over the complex field, an MC can be naturally combined with an ISI channel. The combination provides convenience in the MC design. Different from the TH precoding, an MC adds redundancy at the transmitter and it does not have the modulo operation. MC is a generalization of the PRS and the prefiltering by adding redundancy to the transmitter and a generalization of the vector coding studied by Kasturia, Aslanis, and Cioffi in [72] and Cioffi and Forney [30] and the block-based transmission studied by Al-Dhahir and Cioffi in [5] and the OFDM by considering general convolutional codes rather than only the block codes. Furthermore, the vector coding and block based transmission are designed independently with the input signal constellation, which only belongs to case (i.2) of the MC of this book as mentioned in the Preface. We will show that some small size MC with simple structure over an ISI channel may provide a better performance than the uncoded ISI-free AWGN channel, in other words, the achievable data rates may be better than the capacity of the ISI-free AWGN channel at low channel SNR. Note that in the vector coding and the block based transmission studied, for example, in [72, 5, 30], the water-pouring input signal spectrum and the infinite block size are needed to achieve the ISI channel capacity, which may be complicated in practical implementations, in particular, when the channel SNR is not fixed and further conventional ECC, such as turbo codes, are used before the vector coding. The MC designs introduced in this book do not depend on the channel SNR. More comparisons between the block-based approach and the MC approach are given in Section 4.3.

There are two main different families of MC. One family of MC consists of MC that are designed when an ISI channel is known at the transmitter and the receiver [165, 164, 170, 178, 167, 168, 45, 166, 44, 176, 179, 185]. For this family of MC, the coding performance is the key. For this family MC,

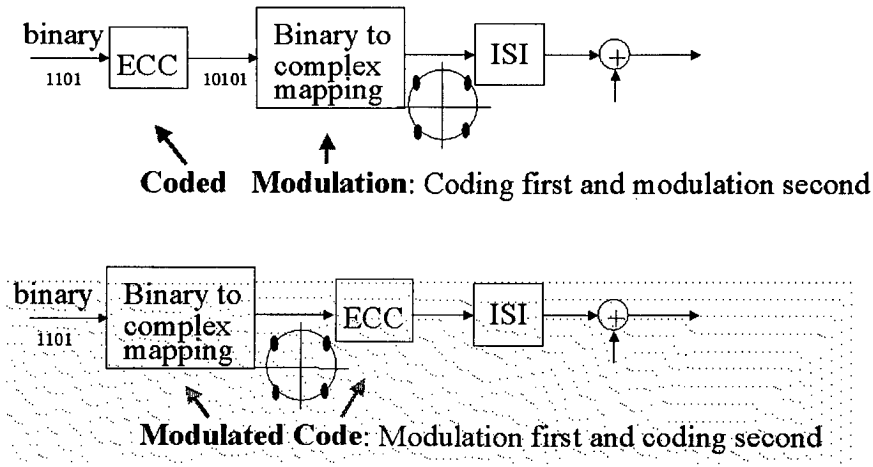

Figure 1.2: Modulated coding vs. coded modulation.

there are two main types of MC designs. One kind of optimal MC design is the optimal MC design that depends on the input signal constellations [178, 170, 166, 44] and the other is the MC design that is independent of the input signal constellations [72, 5, 167, 168, 176, 179, 185]. The other family of MC consists of MC that are designed when an ISI channel is not known at the transmitter or the receiver, which are called polynomial ambiguity resistant MC (PARMC) [89, 88, 171, 186, 163, 172]. Using PARMC the receiver is able to blindly identify the transmitted signal. For this family of MC, the unknown channel information is the key. We shall see later that PARMC is necessary and sufficient for an MC at the transmitter for the blind identification.

In some literature, see for example [165, 89, 88, 171, 163, 172, 53, 118, 77, 97], instead of using "MC" the name "filterbank precoding" is used,.

1.3 Information Rates and Capacity of an ISI Channel with AWGN

We now describe the information rates and the capacity of the ISI channel (1.0.2) with AWGN. Using the water-pouring method, the capacity, $\mathcal{C}(E_s)$,

of channel (1.0.2), see for example [59, 21], is

$$C(E_s) = \sup_x I(x,y) = \frac{1}{4\pi}\int_{-\pi}^{\pi} \max\left\{0, \log_2\left[\frac{2K_s|H(e^{j\theta})|^2}{N_0}\right]\right\} d\theta, \quad (1.3.1)$$

where

$$E_s = \frac{1}{2\pi}\int_{-\pi}^{\pi} \max\left\{0, K_s - \frac{N_0}{2}|H(e^{j\theta})|^{-2}\right\} d\theta, \quad (1.3.2)$$

where $I(x,y)$ is the mutual information of the channel (1.0.2) with input x, $K_s > 0$ is a constant parameter and $H(z)$ is the z transform of $h(k)$. Note that in the above capacity formula, the input x may have any distribution. When the input x is restricted to an i.i.d. source, the maximum mutual information is called the information rate, see for example [59, 21, 122, 121]. The *information rate*, $C_{i.i.d.}(E_s)$, of channel (1.0.2), see [59], is

$$C_{i.i.d.} = \sup_{i.i.d.\ x} I(x,y) = \frac{1}{4\pi}\int_{-\pi}^{\pi} \log_2\left[1 + 2\frac{E_s}{N_0}|H(e^{j\theta})|^2\right] d\theta, \quad (1.3.3)$$

which is achieved when the input x is an i.i.d. Gaussian process. The above information rate determines an achievable reliable information rate when the standard random coding technique, such as the existing ECC defined on finite fields, is used. The information rate is also called, for example in [121], *information capacity*. Although the capacity (1.3.1) can be achieved by the standard water-pouring method, the implementation of the filter to shape the optimal water-pouring spectrum is not simple.

When the ISI channel $H(z) = 1$, i.e., ISI-free, the above information rate and capacity formulas are the same, i.e., the capacity of the AWGN channel:

$$C_{AWGN}(E_s) = \frac{1}{2}\log_2\left[1 + \frac{2E_s}{N_0}\right]. \quad (1.3.4)$$

As an example, let us consider the ISI channel with $h(0) = h(1) = 0.7071$. The capacity and the information rates of this channel are plotted in Fig.1.3 and the details are described in the following chapters, in particular Chapters 4 and 5. One can see that the achievable data rate of the MC for this channel is even better than the capacity of the AWGN channel at channel SNR $E_b/N_0 = -1.15$dB, where E_b is the energy per bit. As we shall see later, the MC used in Fig.1.3 is simple and has small size, which means that it does not have the practical implementation problem.

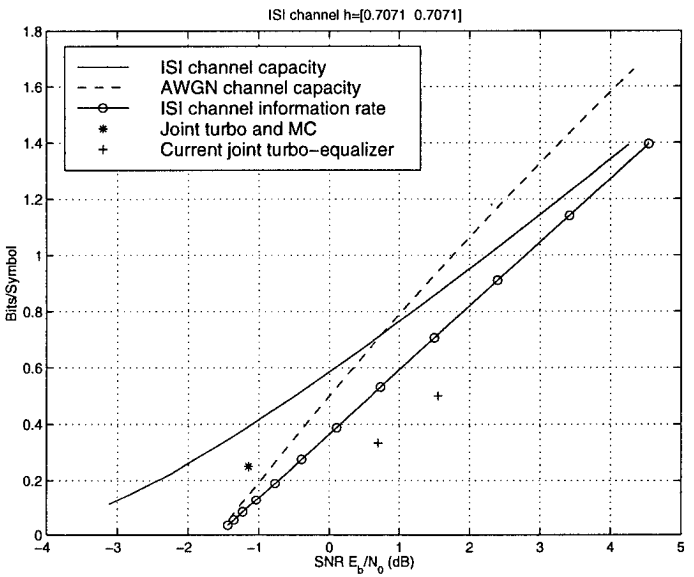

Figure 1.3: ISI channel capacity and information rates.

1.4 Some Notations

Throughout this book, the following notations are used. We use bold-faced capital English letters, $\mathbf{X}(z)$, $\mathbf{Y}(z)$, ..., to denote polynomial matrices/vectors, italic capital English letters, $X(n)$, $Y(n)$,..., to denote constant matrices and vectors that are formed from the scalar sequences $x(n), y(n), \ldots$, after the serial to parallel conversion unless specified otherwise, and lower-case italic English letters to denote scalar values, $x(n)$, $y(n)$, ... Since we deal with error correction codes defined over the complex field, instead of using D we use z^{-1} as the delay variable. The D transforms become the z transforms.

$\|\cdot\|_F$ indicates the Frobenius norm of a matrix, i.e. $\|A\|_F = \sqrt{\sum_{ij} |a_{ij}|^2}$, where $A = (a_{ij})$. Here, the Frobenius norm of the polynomial matrix in z, for instance $\|\mathbf{G}(z)\|_F$, is defined as the square root of the summation of the Frobenius norms squared of all the coefficient matrices, i.e. $\left(\sum_i \|G_i\|_F^2\right)^{1/2}$, where $\mathbf{G}(z) = \sum_i G_i z^{-i}$.

The symbol $A^\dagger$ denotes the complex-conjugate transpose of a matrix or vector A and A^T denotes the transpose of A.

$f|g$ means f divides g, and

$$Q(x) = \frac{1}{\sqrt{2\pi}} \int_x^\infty e^{-t^2/2} dt.$$