US006377782B1

(12) **United States Patent**
Bishop et al.

(10) **Patent No.: US 6,377,782 B1**
(45) **Date of Patent: Apr. 23, 2002**

(54) **METHOD AND APPARATUS FOR COMMUNICATING BETWEEN A CLIENT DEVICE AND A LINEAR BROADBAND NETWORK**

(75) Inventors: **Donald M. Bishop**, Beaverton, OR (US); **George R. J. Green**; **Archie R. Shyu**, both of San Diego, CA (US)

(73) Assignee: **MediaCell, Inc.**, Highlands Ranch, CO (US)

(*) Notice: Subject to any disclaimer, the term of this patent is extended or adjusted under 35 U.S.C. 154(b) by 0 days.

(21) Appl. No.: **09/505,107**

(22) Filed: **Feb. 15, 2000**

Related U.S. Application Data

(60) Provisional application No. 60/122,287, filed on Mar. 1, 1999, provisional application No. 60/128,268, filed on Apr. 8, 1999, and provisional application No. 60/142,082, filed on Jun. 29, 1999.

(51) **Int. Cl.**[7] **H04H 1/00**; H04B 10/12; H04B 7/00

(52) **U.S. Cl.** **455/3.01**; 455/3.05; 379/56.2; 370/277; 370/486; 370/487; 725/110; 725/111; 725/119; 725/123

(58) **Field of Search** 455/13.01, 13.05, 455/422, 66, 67.3, 501; 725/106, 13.1, 109, 110, 114, 111, 126, 123, 119, 120; 370/346, 391, 277, 482, 486, 487; 379/56.2

(56) **References Cited**

U.S. PATENT DOCUMENTS

4,135,157 A * 1/1979 den Toonder 725/120
4,479,253 A * 10/1984 Daniel, Jr. 455/226.2

(List continued on next page.)

FOREIGN PATENT DOCUMENTS

EP 0803 7895 2/1996 ..... H04Q/7/38
EP 0 790 749 A2 8/1997 ..... H04Q/7/32
EP 0 794 749 A3 4/1999 ..... H04Q/7/32
JP 08298688 12/1996 ..... H04Q/7/38
WO WO 94/15294 * 7/1994 ..... 705/1
WO WO 97/48191 * 12/1997 ..... 455/403
WO WO 98/15143 * 4/1998 ..... 455/553
WO WO 98/39879 * 9/1998 ..... 370/352

OTHER PUBLICATIONS

"Technology, Customer Service Hand–in–Hand at Road Runner", *Communication Technology*, May 1999, by Whalen, pp. 42 & 44.

(List continued on next page.)

Primary Examiner—Nay Maung
Assistant Examiner—Raymond B. Persino
(74) *Attorney, Agent, or Firm*—William W. Cochran

(57) **ABSTRACT**

A method of upstream communication over a linear broadband network includes the steps of generating an upstream baseband signal and modulating it onto an upstream wireless radio frequency carrier to produce a first upstream modulated carrier signal. The modulated carrier signal is transmitted wirelessly, received, and demodulated to reproduce the information integrity of the upstream baseband signal. The signal is then modulated onto an upstream linear broadband radio frequency carrier for transmission on the linear broadband network. Advantageously, noise that accumulates at the subscriber premises is removed from the upstream signal prior to presentation of the signal to the upstream path of the linear broadband network. A system for communicating over a linear broadband network includes network access interface devices coupled to the linear broadband network. A subscriber access interface device accepts upstream communication signals and modulates and transmits the signal to the network access interface device. The network access interface device **6** receives and demodulates the signal and then modulates it for transmission on the linear broadband network.

129 Claims, 11 Drawing Sheets

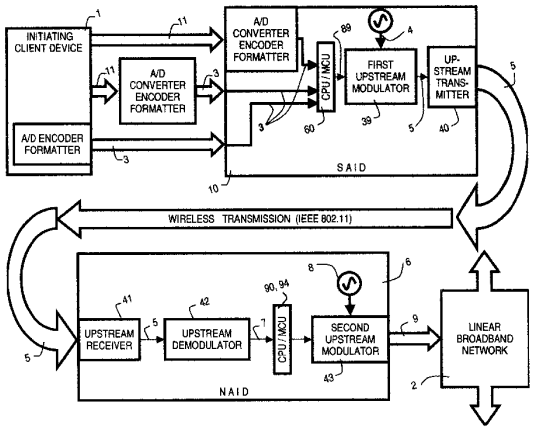

U.S. PATENT DOCUMENTS

5,142,532	A		8/1992	Adams	370/94.1
5,272,700	A		12/1993	Hansen et al.	370/85.3
5,373,503	A		12/1994	Chen	370/18
5,421,030	A	*	5/1995	Baran	725/106
5,463,656	A	*	10/1995	Polivka et al.	375/130
5,610,916	A	*	3/1997	Kostreski et al.	370/487
5,708,961	A		1/1998	Hylton	455/4.2
5,751,707	A		5/1998	Voit et al.	370/384
5,790,806	A		8/1998	Koperda	795/200.82
5,793,413	A		8/1998	Hylton et al.	348/12
5,815,793	A		9/1998	Ferguson	455/3.1
5,815,794	A		9/1998	Williams	455/5.1
5,825,776	A	*	10/1998	Moon	370/437
5,828,946	A		10/1998	Feisullin et al.	455/5.1
5,835,128	A		11/1998	Macdonald et al.	348/8
5,839,052	A		11/1998	Dean et al.	455/5.1
5,844,594	A		12/1998	Ferguson	348/10
5,867,485	A		2/1999	Chambers et al.	
5,867,763	A		2/1999	Dean et al.	455/5.1
5,870,134	A	*	2/1999	Laubach et al.	725/123
5,896,382	A		4/1999	Davis et al.	370/401
5,951,709	A		9/1999	Tanaka	714/755
6,032,261	A	*	2/2000	Hulyalkar	713/400
6,205,495	B1	*	3/2001	Gilbert et al.	455/557

OTHER PUBLICATIONS

"The Internet via Cable", *Scientific American*, Oct. 1999, by Medin and Rolls, pp. 100 & 101.

"intersil Prism1Kit–Eval DSSS PC Card Wireless LAN Description", *Application Note AN9624.6*, Aug. 1999, by Andren, Paljug and Schultz, pp. 1–21.

"Breezecom IEEE 802.11Technical Tutorial", *Wireless Communications*, undated Breeze Wireless Communications,Ltd., pp. 1–18.

"A Short Tutorial on Wireless LANs and IEEE 802.11", *The Bradley Department of Electrical and Computer Engineering*, Virginia Polytechnic Institute and State University, Oct. 1999, by Lough, Blankenship, Krizman, pp. 1–4.

* cited by examiner

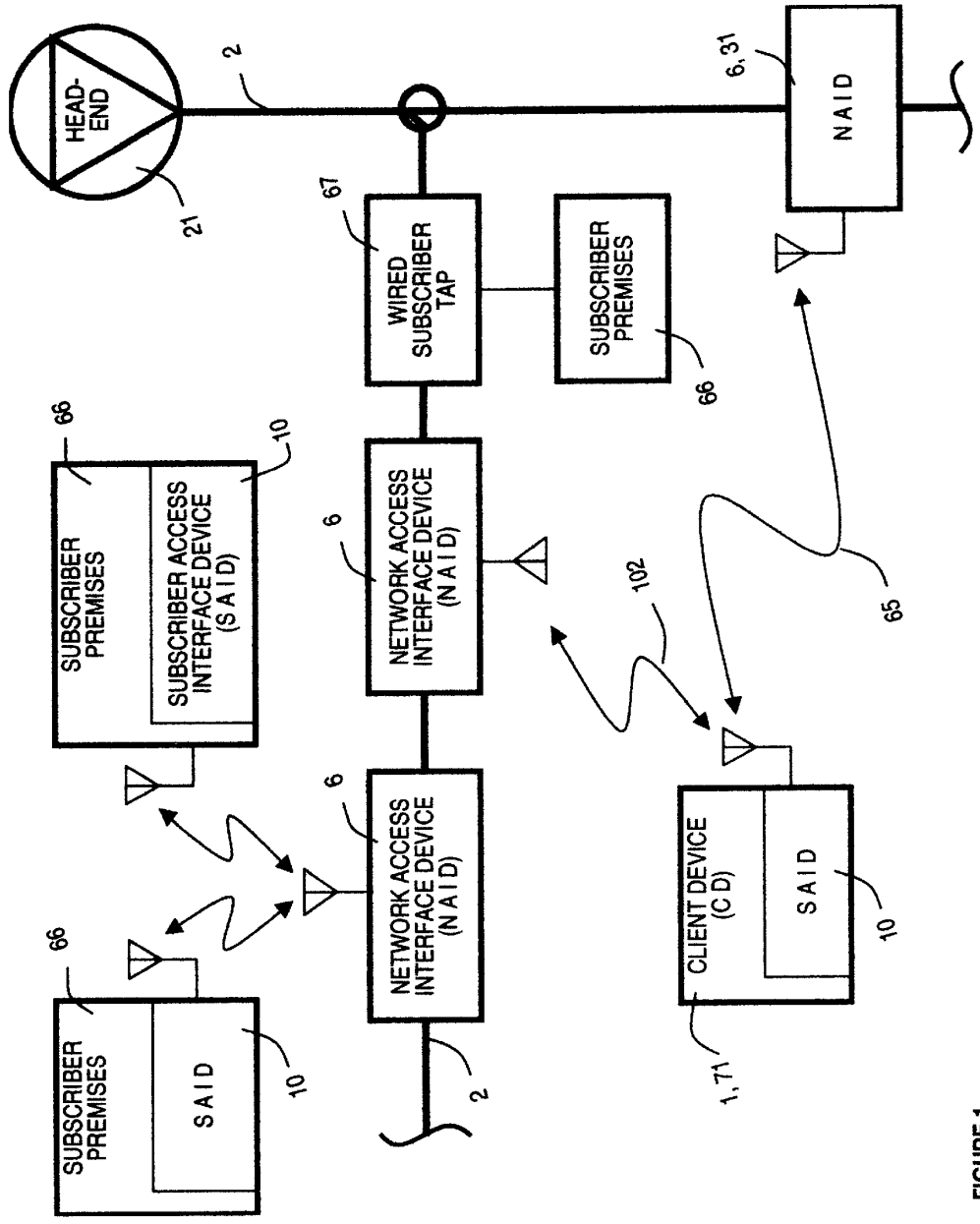
HEAD-END
21
2
WIRED SUBSCRIBER TAP
67
SUBSCRIBER PREMISES
66
NETWORK ACCESS INTERFACE DEVICE (N A I D)
6
NETWORK ACCESS INTERFACE DEVICE (N A I D)
6
2
SUBSCRIBER PREMISES
66
SUBSCRIBER ACCESS INTERFACE DEVICE (S A I D)
10
SUBSCRIBER PREMISES
66
S A I D
10
102
CLIENT DEVICE (C D)
1, 71
S A I D
10
65
6, 31
N A I D

FIGURE 1

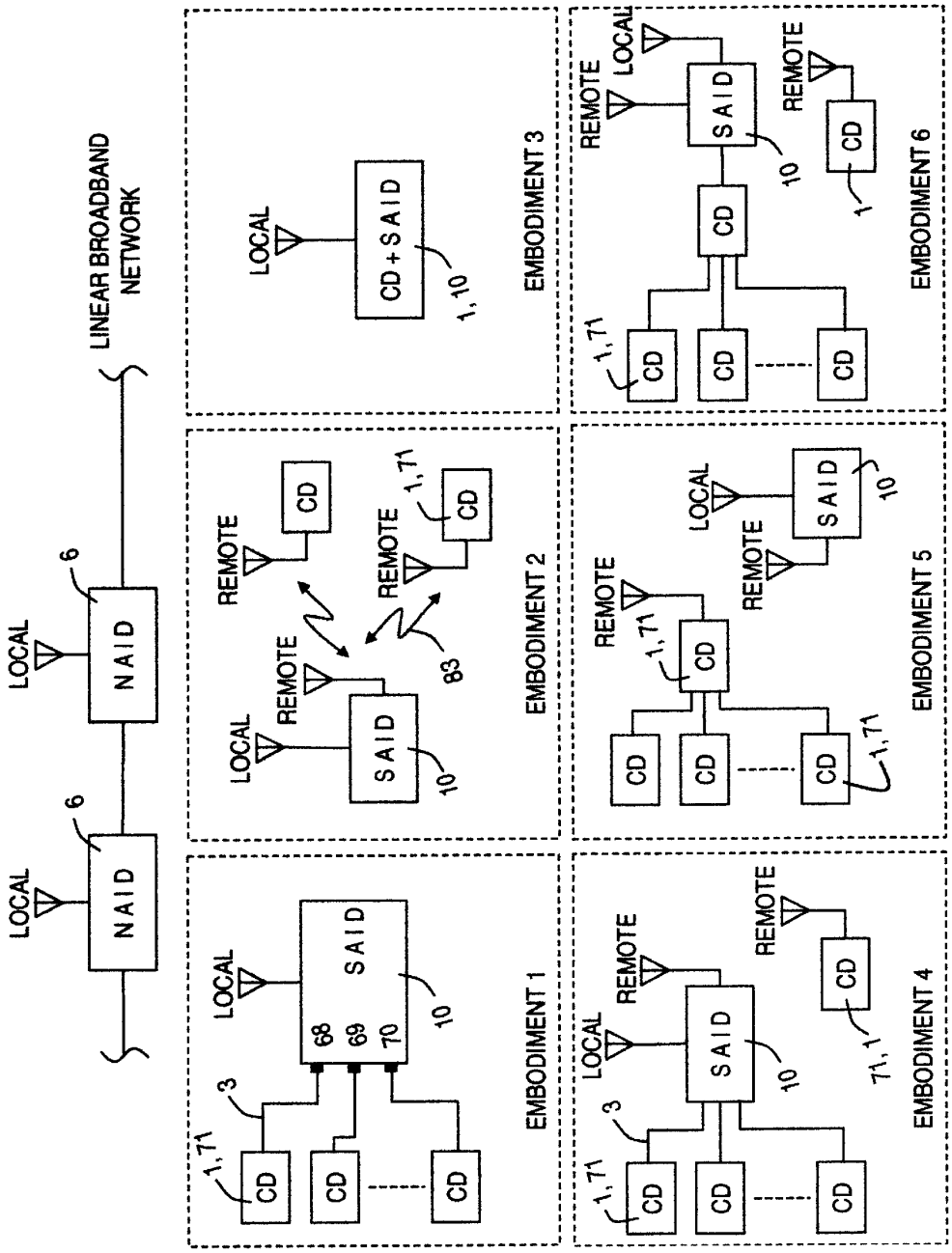
LINEAR BROADBAND NETWORK
LOCAL
NAID
6
LOCAL
NAID
6
LOCAL
SAID
68
69
70
10
3
1,71
CD
CD
CD
EMBODIMENT 1
LOCAL
REMOTE
SAID
10
REMOTE
CD
REMOTE
CD
1,71
83
EMBODIMENT 2
LOCAL
CD + SAID
1,10
EMBODIMENT 3
LOCAL
REMOTE
SAID
10
3
1,71
CD
CD
CD
REMOTE
CD
71,1
EMBODIMENT 4
REMOTE
CD
1,71
CD
CD
CD
1,71
LOCAL
REMOTE
SAID
10
EMBODIMENT 5
REMOTE
LOCAL
SAID
10
CD
CD
CD
1,71
REMOTE
CD
1
EMBODIMENT 6

FIGURE 2

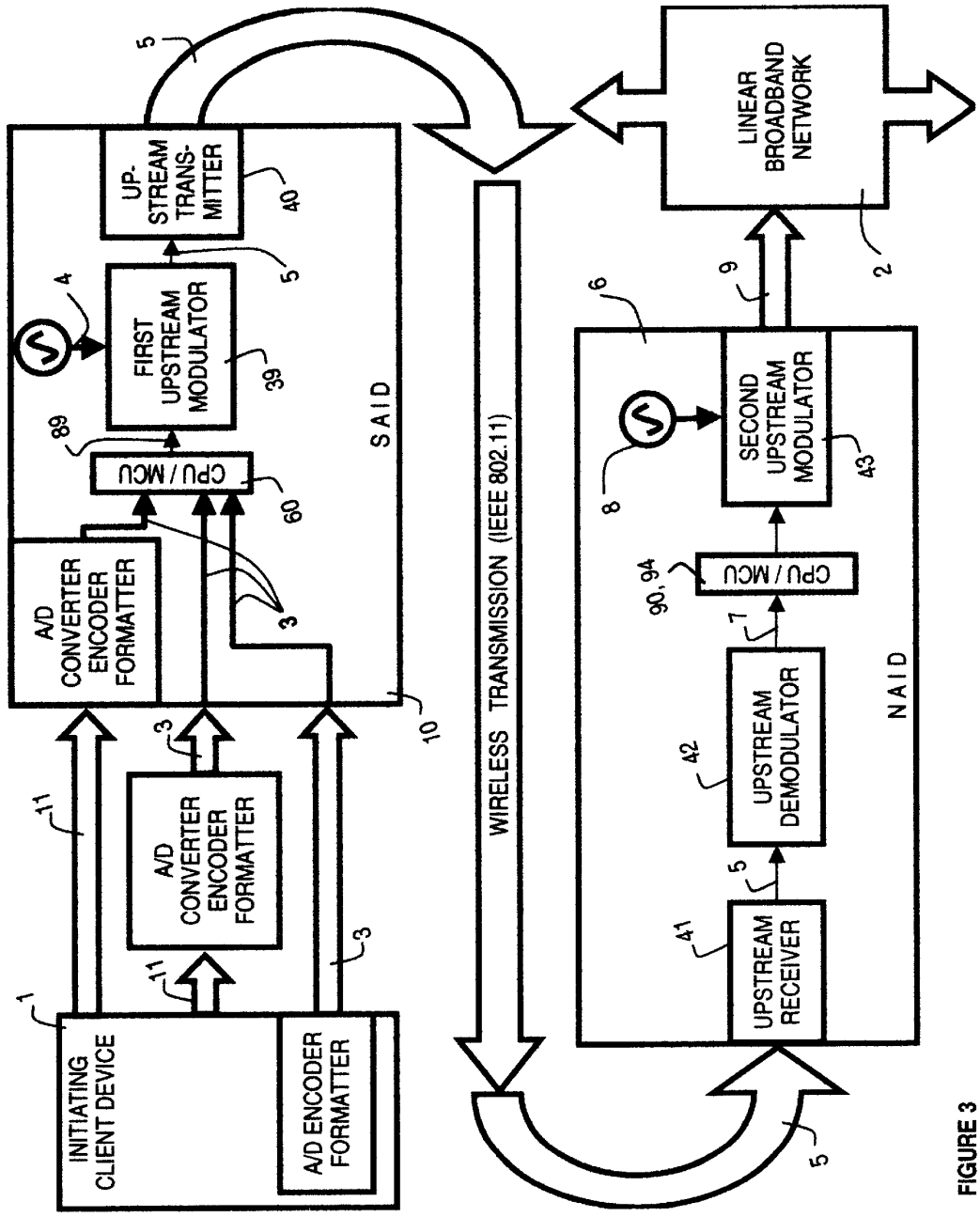
INITIATING CLIENT DEVICE
A/D CONVERTER ENCODER FORMATTER
A/D CONVERTER ENCODER FORMATTER
A/D ENCODER FORMATTER
CPU / MCU
FIRST UPSTREAM MODULATOR
UP-STREAM TRANS-MITTER
SAID
WIRELESS TRANSMISSION (IEEE 802.11)
UPSTREAM RECEIVER
UPSTREAM DEMODULATOR
CPU / MCU
SECOND UPSTREAM MODULATOR
NAID
LINEAR BROADBAND NETWORK

FIGURE 3

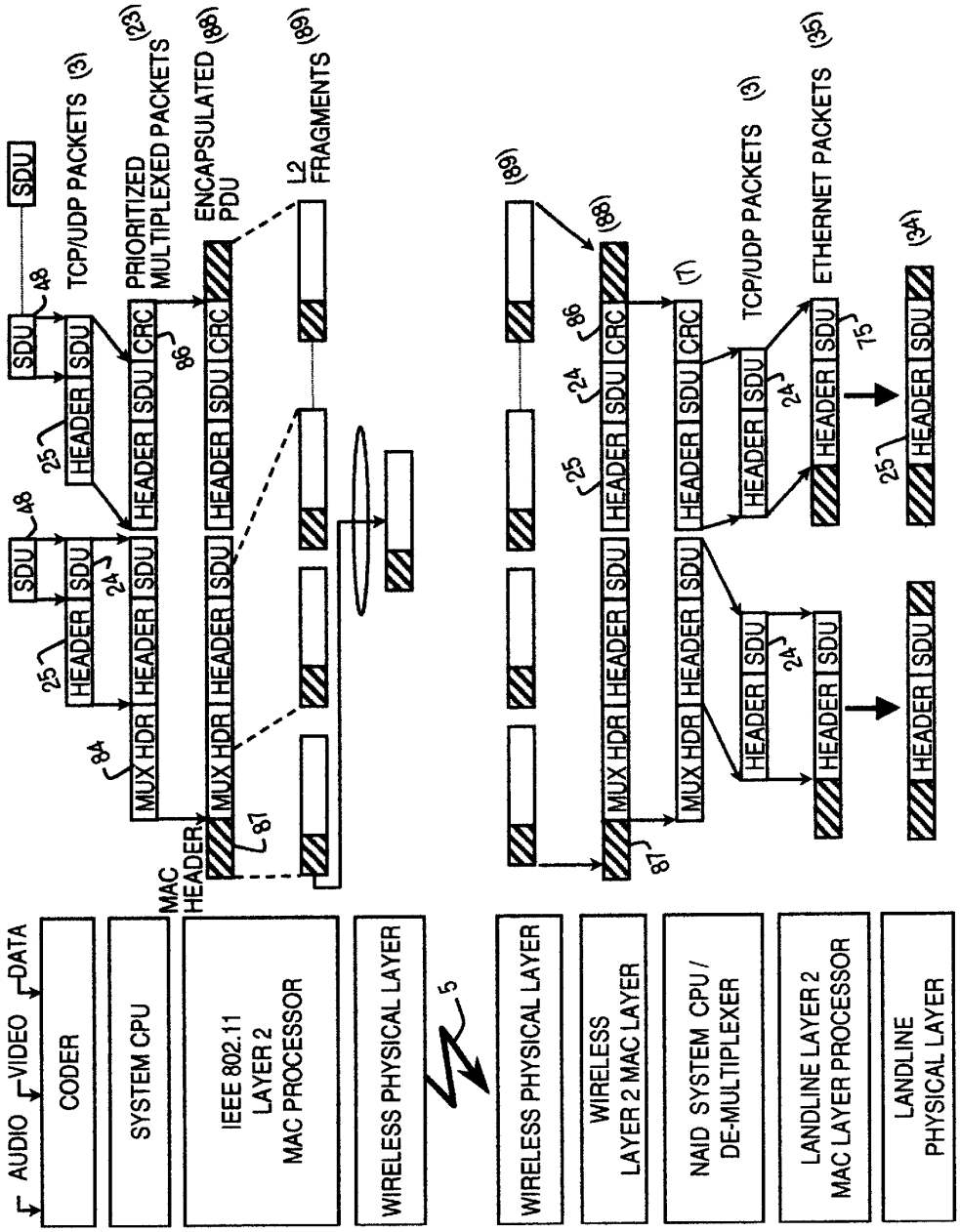
AUDIO
VIDEO
DATA
CODER
SYSTEM CPU
IEEE 802.11
LAYER 2
MAC PROCESSOR
WIRELESS PHYSICAL LAYER
MAC HEADER
SDU
TCP/UDP PACKETS (3)
PRIORITIZED MULTIPLEXED PACKETS (23)
ENCAPSULATED PDU (88)
L2 FRAGMENTS (89)
HEADER
MUX HDR
CRC
5
WIRELESS PHYSICAL LAYER
WIRELESS
LAYER 2 MAC LAYER
NAID SYSTEM CPU /
DE-MULTIPLEXER
LANDLINE LAYER 2
MAC LAYER PROCESSOR
LANDLINE
PHYSICAL LAYER
TCP/UDP PACKETS (3)
ETHERNET PACKETS (35)
(34)

FIGURE 4

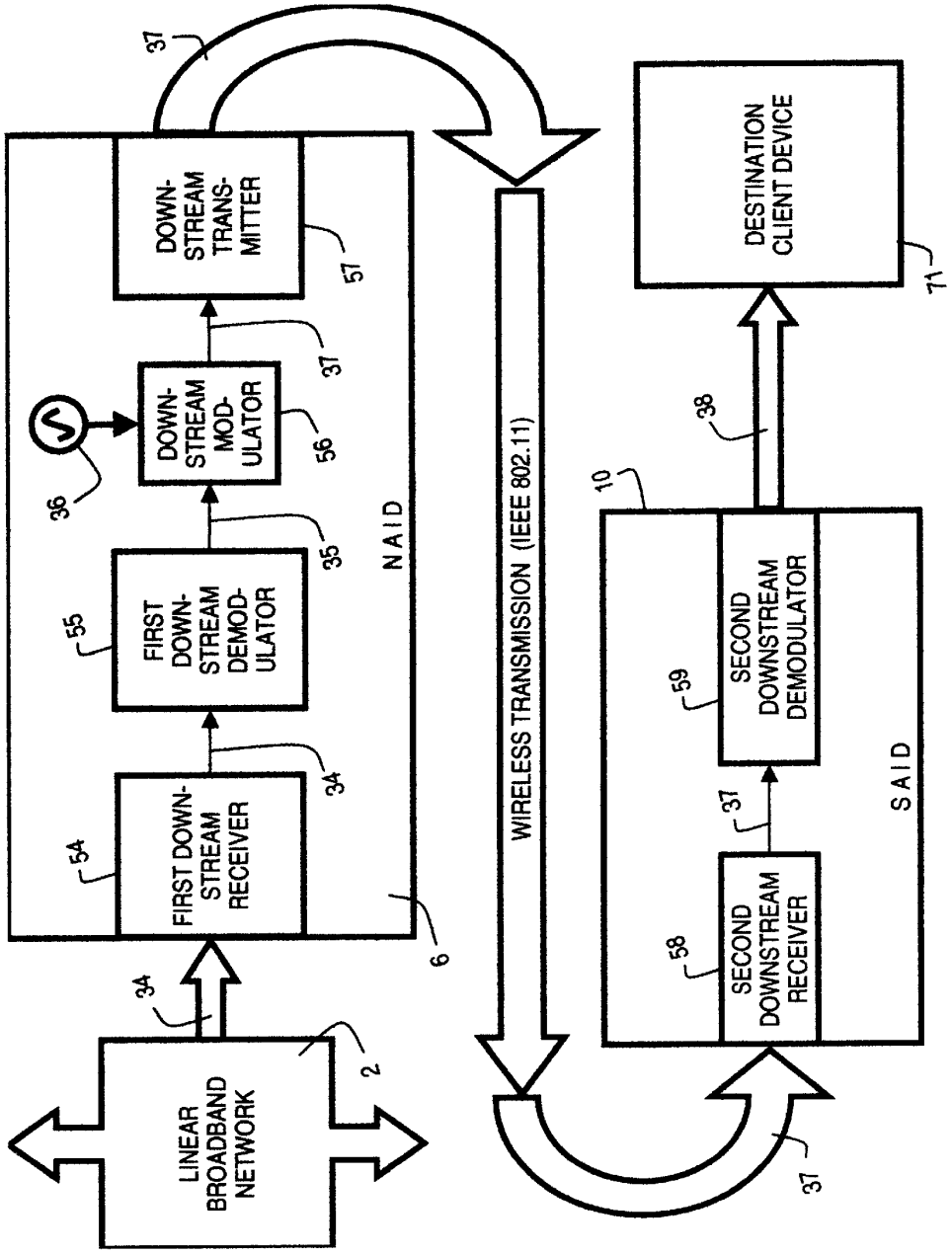
LINEAR BROADBAND NETWORK
FIRST DOWN-STREAM RECEIVER
FIRST DOWN-STREAM DEMOD-ULATOR
DOWN-STREAM MOD-ULATOR
DOWN-STREAM TRANS-MITTER
NAID
WIRELESS TRANSMISSION (IEEE 802.11)
SECOND DOWNSTREAM RECEIVER
SECOND DOWNSTREAM DEMODULATOR
SAID
DESTINATION CLIENT DEVICE
2
6
10
34
35
36
37
38
54
55
56
57
58
59
71

FIGURE 5

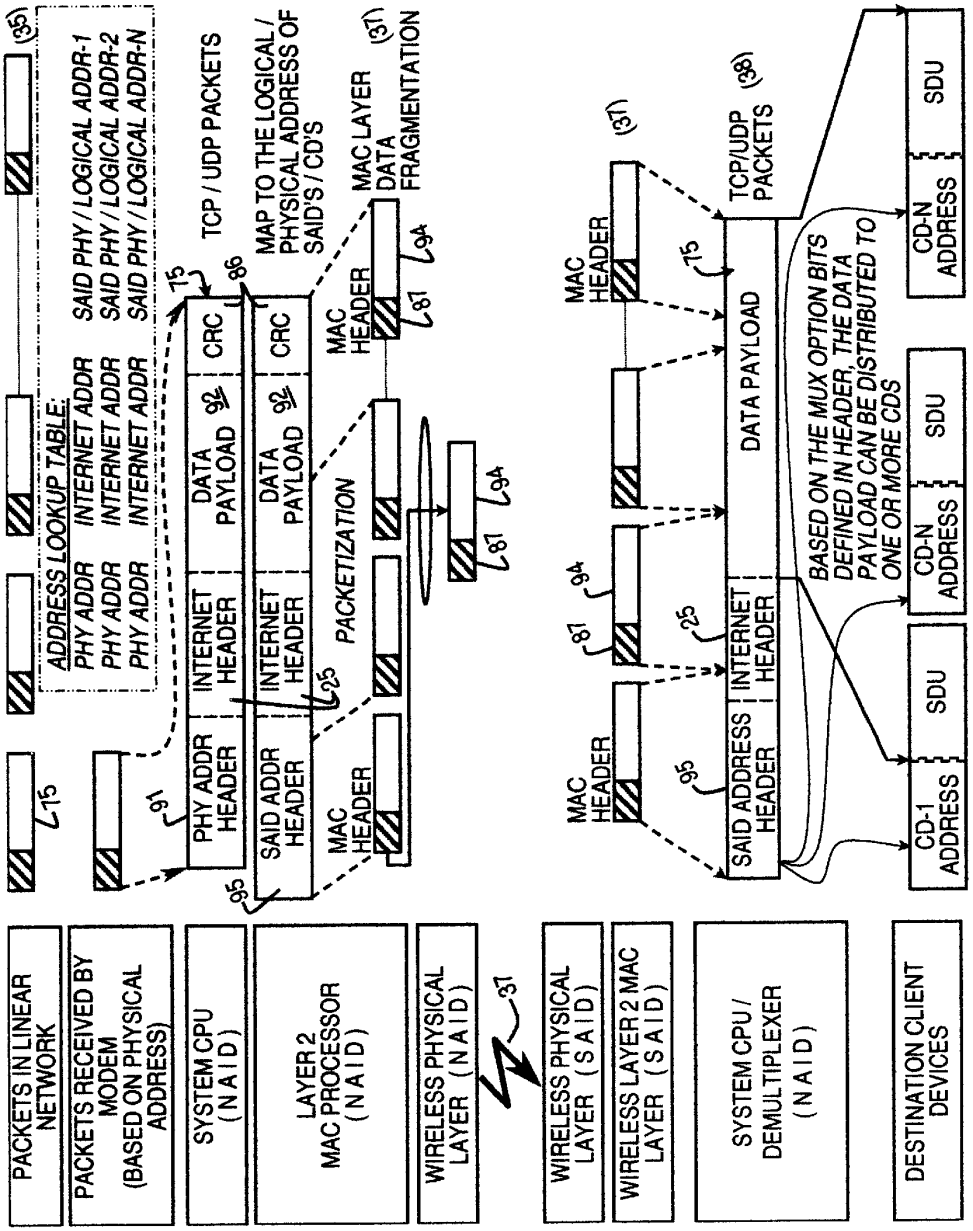
PACKETS IN LINEAR NETWORK
PACKETS RECEIVED BY MODEM (BASED ON PHYSICAL ADDRESS)
SYSTEM CPU (NAID)
LAYER 2 MAC PROCESSOR (NAID)
WIRELESS PHYSICAL LAYER (NAID)
WIRELESS PHYSICAL LAYER (SAID)
WIRELESS LAYER 2 MAC LAYER (SAID)
SYSTEM CPU / DEMULTIPLEXER (NAID)
DESTINATION CLIENT DEVICES
ADDRESS LOOKUP TABLE:
PHY ADDR INTERNET ADDR SAID PHY / LOGICAL ADDR-1
PHY ADDR INTERNET ADDR SAID PHY / LOGICAL ADDR-2
PHY ADDR INTERNET ADDR SAID PHY / LOGICAL ADDR-N
PHY ADDR HEADER
INTERNET HEADER
DATA PAYLOAD
CRC
TCP / UDP PACKETS
SAID ADDR HEADER
MAP TO THE LOGICAL / PHYSICAL ADDRESS OF SAID'S / CD'S
MAC HEADER
PACKETIZATION
MAC LAYER DATA FRAGMENTATION
SAID ADDRESS HEADER
TCP/UDP PACKETS
BASED ON THE MUX OPTION BITS DEFINED IN HEADER, THE DATA PAYLOAD CAN BE DISTRIBUTED TO ONE OR MORE CDS
CD-1 ADDRESS
CD-N ADDRESS
SDU

FIGURE 6

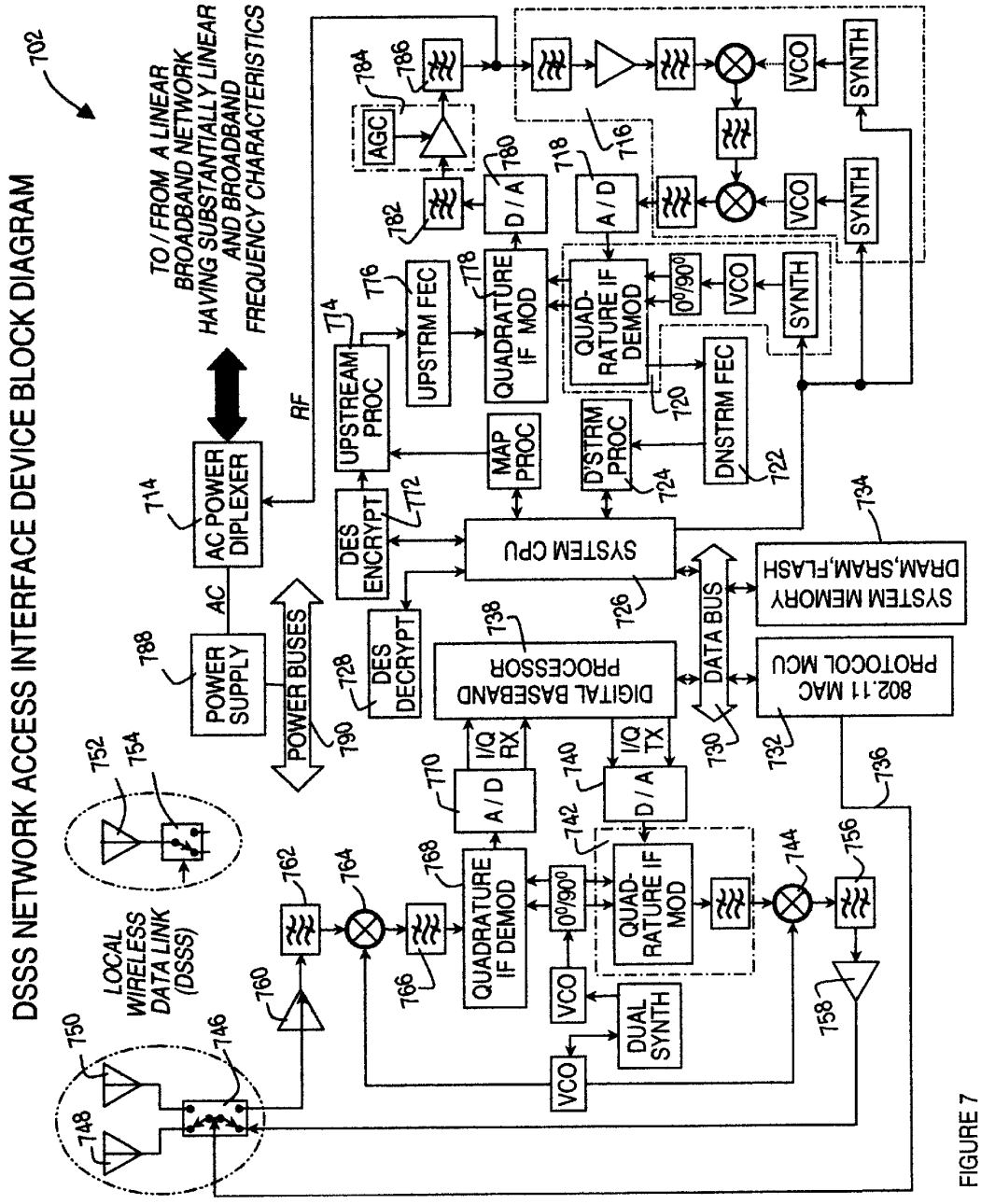
DSSS NETWORK ACCESS INTERFACE DEVICE BLOCK DIAGRAM
702
TO / FROM A LINEAR BROADBAND NETWORK HAVING SUBSTANTIALLY LINEAR AND BROADBAND FREQUENCY CHARACTERISTICS
RF
AC POWER DIPLEXER
714
AC
POWER SUPPLY
788
POWER BUSES
790
LOCAL WIRELESS DATA LINK (DSSS)
750
748
746
752
754
760
762
764
766
768
QUADRATURE IF DEMOD
770
A / D
I/Q RX
DUAL SYNTH
VCO
0°/90°
742
QUAD-RATURE IF MOD
744
756
758
736
740
D / A
I/Q TX
DIGITAL BASEBAND PROCESSOR
738
DES DECRYPT
728
SYSTEM CPU
726
DES ENCRYPT
772
UPSTREAM PROC
774
MAP PROC
UPSTRM FEC
776
QUADRATURE IF MOD
778
D'STRM PROC
724
DNSTRM FEC
722
QUAD-RATURE IF DEMOD
720
0°/90°
VCO
SYNTH
A / D
718
716
782
D / A
780
AGC
784
786
DATA BUS
730
SYSTEM MEMORY DRAM,SRAM,FLASH
734
802.11 MAC PROTOCOL MCU
732

FIGURE 7

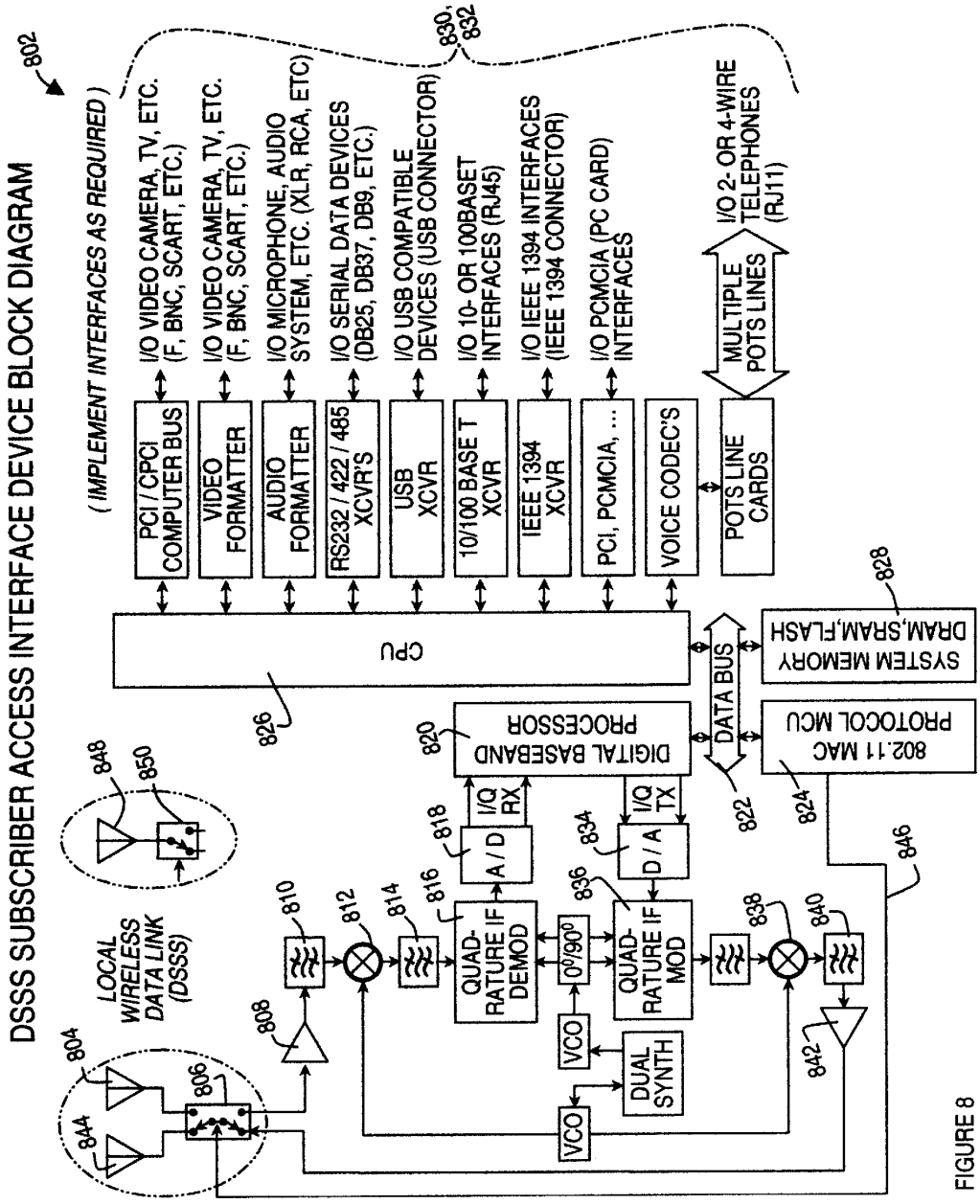
DSSS SUBSCRIBER ACCESS INTERFACE DEVICE BLOCK DIAGRAM
802
(IMPLEMENT INTERFACES AS REQUIRED)
830, 832
I/O VIDEO CAMERA, TV, ETC. (F, BNC, SCART, ETC.)
I/O VIDEO CAMERA, TV, ETC. (F, BNC, SCART, ETC.)
I/O MICROPHONE, AUDIO SYSTEM, ETC. (XLR, RCA, ETC)
I/O SERIAL DATA DEVICES (DB25, DB37, DB9, ETC.)
I/O USB COMPATIBLE DEVICES (USB CONNECTOR)
I/O 10- OR 100BASET INTERFACES (RJ45)
I/O IEEE 1394 INTERFACES (IEEE 1394 CONNECTOR)
I/O PCMCIA (PC CARD) INTERFACES
I/O 2- OR 4-WIRE TELEPHONES (RJ11)
PCI / CPCI COMPUTER BUS
VIDEO FORMATTER
AUDIO FORMATTER
RS232 / 422 / 485 XCVR'S
USB XCVR
10/100 BASE T XCVR
IEEE 1394 XCVR
PCI, PCMCIA, ...
VOICE CODEC'S
POTS LINE CARDS
MULTIPLE POTS LINES
CPU
826
828
SYSTEM MEMORY DRAM,SRAM,FLASH
DATA BUS
822
820
DIGITAL BASEBAND PROCESSOR
802.11 MAC PROTOCOL MCU
824
846
I/Q RX
I/Q TX
818
A / D
834
D / A
816
836
QUAD-RATURE IF DEMOD
0°/90°
QUAD-RATURE IF MOD
VCO
DUAL SYNTH
VCO
810
812
814
808
838
840
842
848
850
804
806
844
LOCAL WIRELESS DATA LINK (DSSS)

FIGURE 8

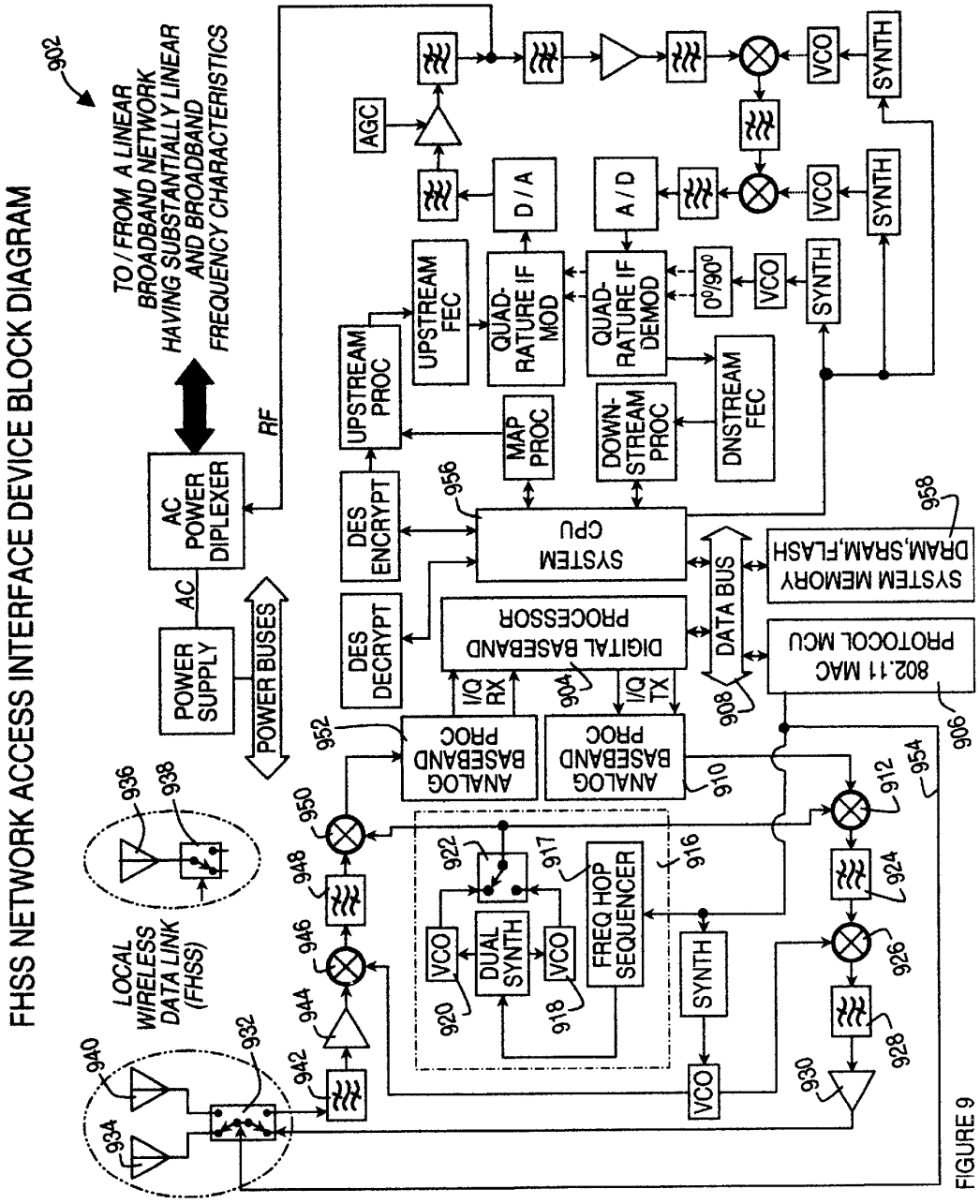
FHSS NETWORK ACCESS INTERFACE DEVICE BLOCK DIAGRAM
902
TO / FROM A LINEAR BROADBAND NETWORK HAVING SUBSTANTIALLY LINEAR AND BROADBAND FREQUENCY CHARACTERISTICS
AC POWER DIPLEXER
RF
POWER SUPPLY
AC
POWER BUSES
LOCAL WIRELESS DATA LINK (FHSS)
936
938
940
934
932
942
944
946
948
950
952
AGC
D / A
A / D
VCO
SYNTH
UPSTREAM PROC
UPSTREAM FEC
QUAD-RATURE IF MOD
QUAD-RATURE IF DEMOD
0°/90°
MAP PROC
DOWN-STREAM PROC
DNSTREAM FEC
DES ENCRYPT
DES DECRYPT
956
SYSTEM CPU
DIGITAL BASEBAND PROCESSOR
904
I/Q RX
I/Q TX
DATA BUS
908
SYSTEM MEMORY DRAM,SRAM,FLASH
958
802.11 MAC PROTOCOL MCU
906
ANALOG BASEBAND PROC
910
912
954
916
917
922
920
918
DUAL SYNTH
FREQ HOP SEQUENCER
924
926
928
930

FIGURE 9

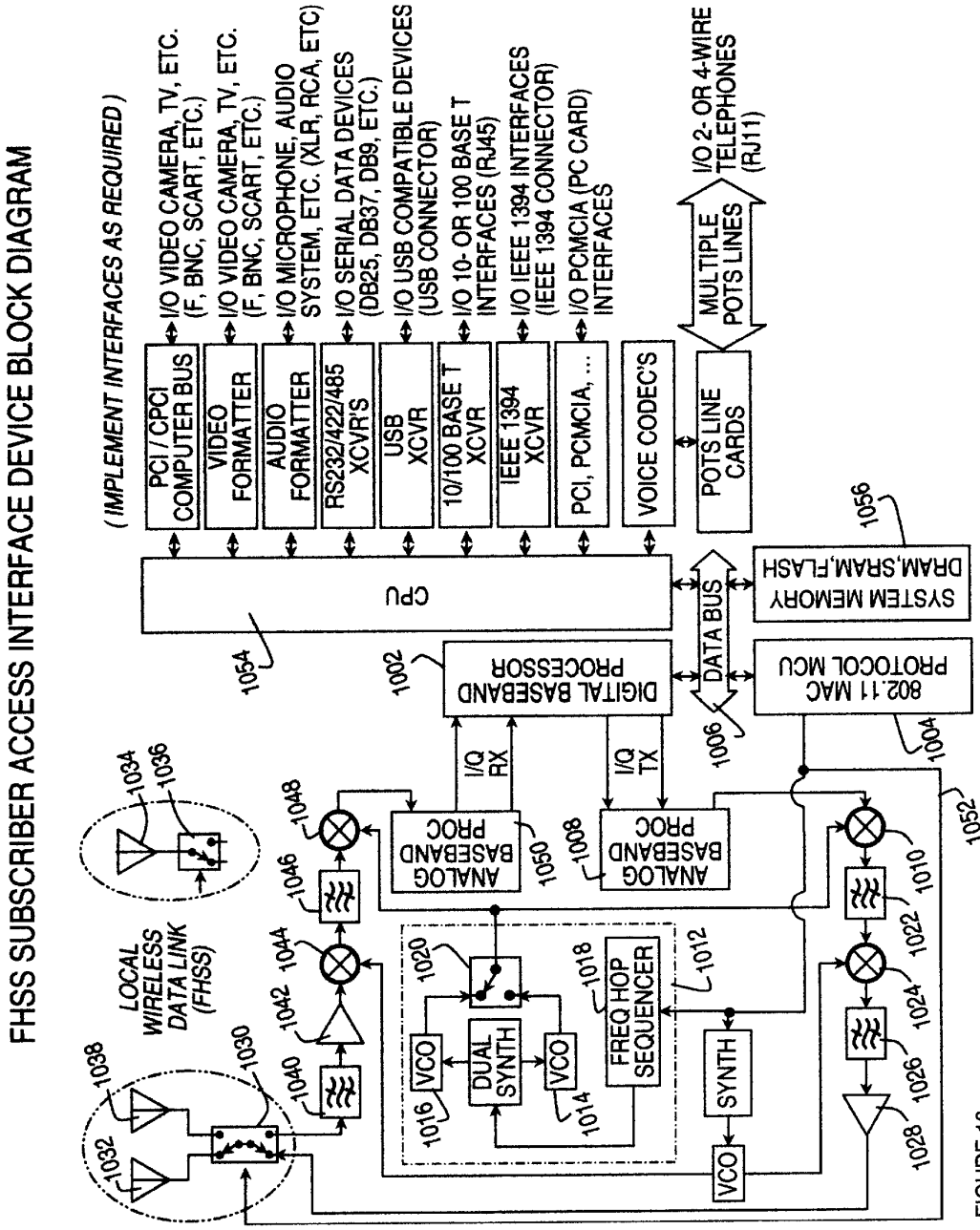
FHSS SUBSCRIBER ACCESS INTERFACE DEVICE BLOCK DIAGRAM
(IMPLEMENT INTERFACES AS REQUIRED)
PCI / CPCI COMPUTER BUS
I/O VIDEO CAMERA, TV, ETC. (F, BNC, SCART, ETC.)
VIDEO FORMATTER
I/O VIDEO CAMERA, TV, ETC. (F, BNC, SCART, ETC.)
AUDIO FORMATTER
I/O MICROPHONE, AUDIO SYSTEM, ETC. (XLR, RCA, ETC)
RS232/422/485 XCVR'S
I/O SERIAL DATA DEVICES (DB25, DB37, DB9, ETC.)
USB XCVR
I/O USB COMPATIBLE DEVICES (USB CONNECTOR)
10/100 BASE T XCVR
I/O 10- OR 100 BASE T INTERFACES (RJ45)
IEEE 1394 XCVR
I/O IEEE 1394 INTERFACES (IEEE 1394 CONNECTOR)
PCI, PCMCIA, ...
I/O PCMCIA (PC CARD) INTERFACES
VOICE CODEC'S
POTS LINE CARDS
MULTIPLE POTS LINES
I/O 2- OR 4-WIRE TELEPHONES (RJ11)
CPU
DIGITAL BASEBAND PROCESSOR
DATA BUS
SYSTEM MEMORY DRAM,SRAM,FLASH
802.11 MAC PROTOCOL MCU
I/Q RX
I/Q TX
ANALOG BASEBAND PROC
ANALOG BASEBAND PROC
LOCAL WIRELESS DATA LINK (FHSS)
VCO
DUAL SYNTH
VCO
FREQ HOP SEQUENCER
SYNTH
VCO
1002
1004
1006
1008
1010
1012
1014
1016
1018
1020
1022
1024
1026
1028
1030
1032
1034
1036
1038
1040
1042
1044
1046
1048
1050
1052
1054
1056

FIGURE 10

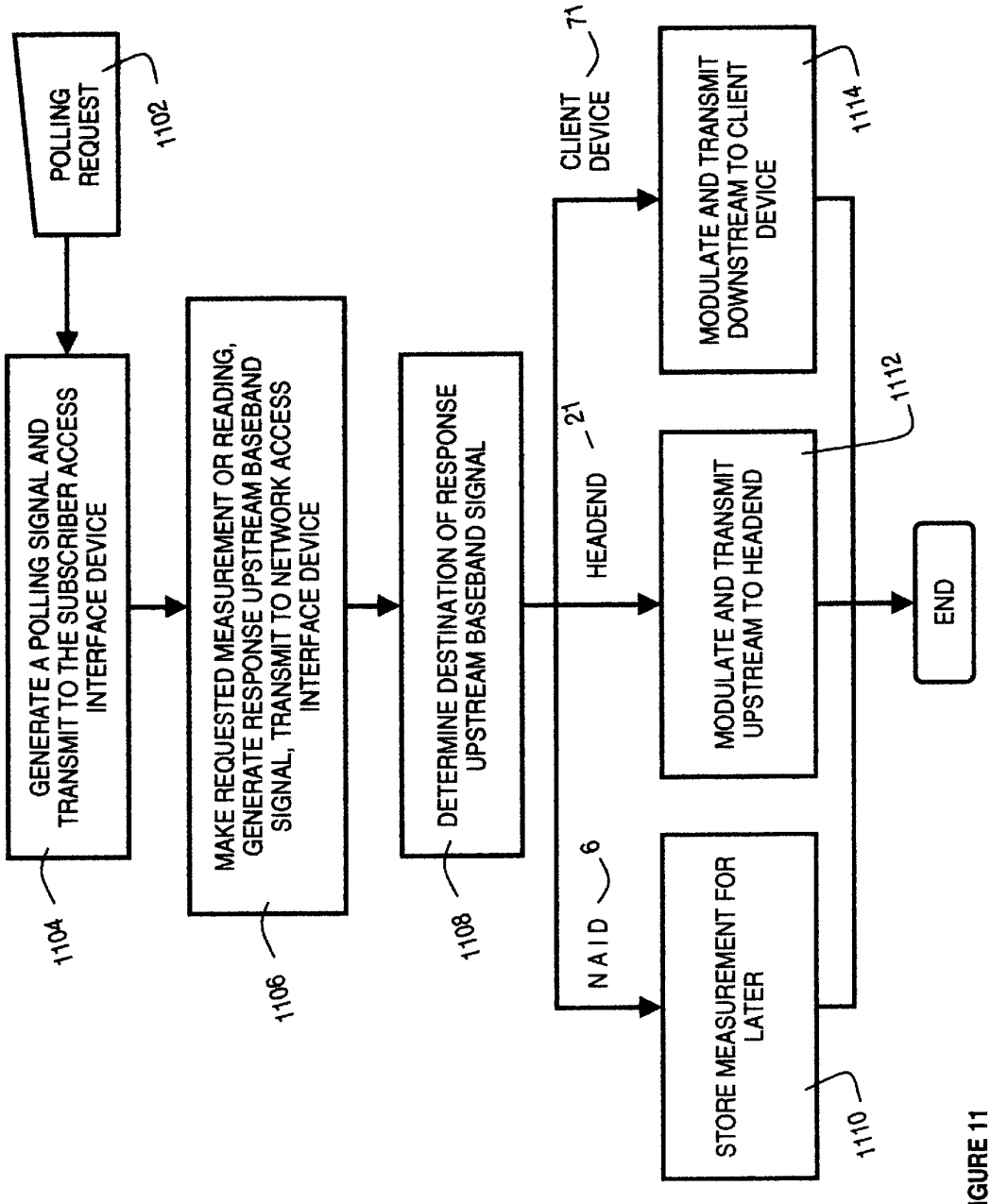
POLLING REQUEST
1102
GENERATE A POLLING SIGNAL AND TRANSMIT TO THE SUBSCRIBER ACCESS INTERFACE DEVICE
1104
MAKE REQUESTED MEASUREMENT OR READING, GENERATE RESPONSE UPSTREAM BASEBAND SIGNAL, TRANSMIT TO NETWORK ACCESS INTERFACE DEVICE
1106
DETERMINE DESTINATION OF RESPONSE UPSTREAM BASEBAND SIGNAL
1108
CLIENT DEVICE
71
HEADEND
21
NAID
6
MODULATE AND TRANSMIT DOWNSTREAM TO CLIENT DEVICE
1114
MODULATE AND TRANSMIT UPSTREAM TO HEADEND
1112
STORE MEASUREMENT FOR LATER
1110
END

FIGURE 11

METHOD AND APPARATUS FOR COMMUNICATING BETWEEN A CLIENT DEVICE AND A LINEAR BROADBAND NETWORK

Cross Reference to Related Applications

This application claims the benefit of provisional application Ser. No. 60/122,287, filed Mar. 1, 1999, entitled"BI-DIRECTIONAL COMMUNICATION SYSTEM USING WIRELESS MEANS SUCH AS IEEE 802.11 TO ELIMINATE NOISE NORMALLY ASSOCIATED WITH A CABLE SUBSCRIBER DROP," provisional application Ser. No. 60/128,268 filed Apr. 08, 1999, entitled"BI-DIRECTIONAL COMMUNICATION SYSTEM USING WIRELESS MEANS SUCH AS IEEE 802.11 TO ELIMINATE NOISE NORMALLY ASSOCIATED WITH A CABLE SUBSCRIBER DROP" and provisional application Ser. No. 60/142,082, filed Jun. 29, 1999, entitled"BI-DIRECTIONAL COMMUNICATION SYSTEM USING WIRELESS MEANS SUCH AS IEEE 802.11 TO ELIMINATE NOISE NORMALLY ASSOCIATED WITH A CABLE SUBSCRIBER DROP."

FIELD OF THE INVENTION

The present invention relates generally to data communications and more specifically to transmission and receipt of data via a linear broadband network.

BACKGROUND OF THE INVENTION

There currently exists a complex and robust wired television cable infrastructure that is commonly referred to as the Hybrid Fiber Coax ("HFC") network. The HFC network is an example of a linear broadband network having substantially linear and broadband frequency characteristics. A linear broadband network exhibits linearity in that there are substantially no exponential terms in a gain function of the network over a frequency band of operation. As one of ordinary skill in the art appreciates, an all fiber and an all coaxial cable network is also a linear broadband network. The HFC network merely happens to be the most prevalent linear broadband network in use at the time of the filing of the present patent application. The HFC network has typically been used for delivery of television signals to subscribers. Each subscriber, which represents either an individual or a business, is connected to the cable TV HFC network through coaxial cables running from a headend in a trunk and branch configuration to individual subscribers. Over time, the cable TV HFC network has been upgraded by replacement of some of the coaxial cable trunk lines with fiber optic cable, which has led to this infrastructure being referred to as the HFC network. The connection between the HFC network and the subscriber premises is conventionally made with a coaxial cable, referred to as a subscriber drop, which spans the connection between a tap connected to the HFC network and a client device, which is most cases is a television set, located in the subscriber premises.

Deregulation of the communications industry has made it permissible for the telephony companies to supply television and video services and cable companies to supply telephony and data services. Accordingly, there is an interest among the cable TV service providers to grow their market share by being able to offer all communications services. The cable TV service providers are in a unique position in that they already have a linear and broadband network that reaches many existing subscribers. Their main historical business being television delivery, the cable companies have focused

primarily on the forward or downstream path. In order to be a full service provider, however, the return or upstream path from the subscriber to the headend must be provided. For example, there is a growing demand for communication services that require higher performance from the communication infrastructure, such as higher speed Internet access, interactive television, video conferencing, and telephony. As the demand grows, there will be increasing demands placed on the quality and speed of the downstream and upstream paths. Providing subscriber access to the upstream path presents a challenge to the cable TV service providers. The cable TV service providers have provided a high quality network up to the curb (tap). However, the subscriber drop and client devices have been a source of significant noise resulting from bad connectors, unterminated connections, frayed cables, faulty wiring, breached shielding, noise generated by subscriber appliances, etc. The noise leaks into subscriber wiring and onto the subscriber drop, presenting itself on the upstream path of the HFC network as unwanted signal energy. The very nature of the trunk and branch configuration of the hybrid fiber coax network causes the noise to accumulate on the upstream path as the branches of the network converge. The noise from each subscriber adds together to reduce the overall signal-to-noise ratio of the return signal.

The signal-to-noise ratio of a communications signal is directly related to the effective bandwidth of the channel. Decreasing the signal-to-noise ratio, therefore, increases the bit error rate of a channel. As signal-to-noise ratio decreases, the data transmission rate must slow to a level that provides a sufficiently low bit error rate. The lowering of the data transmission rate is in direct contravention to the objective of the cable TV service providers in supplying high-speed communication services. The signal-to-noise ratio problem is exacerbated when the composite signal reaches an optical laser that is used to power the return transmission fiber. The absolute power level of the signal is limited because the laser has a fixed modulation index. In other words, as the noise level increases, the available signal strength decreases. This limits the cable service provider's option of amplifying the signal to achieve an acceptable signal-to-noise ratio. In data transmission applications, it is possible to employ loss packet retransmission to correct for noise that degrades the integrity of the upstream information. As speeds increase, however, retransmission consumes valuable bandwidth that would otherwise be used for additional upstream information. Consequently, noise limits the overall capacity of the network, thereby increasing the cost of the service to subscribers. There is a need, therefore, to improve upstream capacity on the network by reducing the injection of upstream noise.

U.S. Pat. No. 5,867,485 issued to Chambers et al. and assigned to Bellsouth Corporation, proposes a low power microcellular wireless drop for a full duplex interactive network in which a cable connecting a bi-directional fiber network to a subscriber premises is replaced by two wireless transceivers. A Network Interface Unit multiplexes and de-multiplexes signals transmitted and received from a number of subscriber appliances. These signals are transmitted and received by a roof or eaves mounted antenna. The upstream signal is up-converted, amplified, and filtered before being transmitted to a receiver. The system disclosed is a linear processing system, which amplifies the noise presented to the upstream path by the subscriber premises. Disadvantageously, the linear processing propagates any in-band noise and reduces the signal-to-noise ratio. The downstream signal is filtered, amplified, and down-

converted before entering the Network Interface Unit and de-multiplexed to the appropriate appliance. The wireless drop succeeds in isolating the subscriber premises from the bi-directional fiber network, but does not remove the noise injected into the upstream signal. There remains a need, therefore, for a method or system to limit the noise ingress into the upstream path.

SUMMARY OF THE INVENTION

According to one aspect of an embodiment of the present invention, a method of communicating information from a client device to a linear broadband network having substantially linear and broadband frequency characteristics comprises the steps of generating an upstream baseband signal having a predefined format. The method further comprises modulating the upstream baseband signal onto at least one upstream wireless radio frequency carrier to generate at least one first upstream modulated carrier signal and transmitting the at least one first upstream modulated carrier signal wirelessly. The method further includes receiving the at least one first upstream modulated carrier signal at a network access interface device coupled to the linear broadband network and demodulating the at least one first upstream modulated carrier signal to produce an upstream demodulated baseband signal. The method then comprises modulating the upstream demodulated baseband signal onto at least one upstream linear broadband radio frequency carrier to produce at least one second upstream modulated carrier signal having a signal format compatible with the linear broadband network.

According to another aspect of the present invention, a method of communicating bi-directional information between a client device and a linear broadband network having substantially linear and broadband frequency characteristics comprises the steps of generating an upstream baseband signal, having a predefined format, and modulating the upstream baseband signal onto at least one upstream wireless radio frequency carrier to generate at least one first upstream modulated carrier signal. The method further comprises transmitting said at least one fist upstream modulated carrier signal wirelessly and receiving said at least one first upstream modulated carrier signal at a network access interface device coupled to the linear broadband network. The method further comprises demodulating the at least one first upstream modulated carrier signal to produce an upstream demodulated baseband signal and modulating the upstream demodulated baseband signal onto at least one upstream radio linear broadband frequency carrier to produce at least one second upstream modulated carrier signal having a signal format compatible with the linear broadband network. The method further comprises receiving at least one downstream linear broadband network radio frequency carrier signal comprising a first downstream modulated carrier signal from the linear broadband network and demodulating the at least one first downstream modulated carrier signal to produce at least one first downstream baseband signal having a predefined format. The method further comprises modulating the at least one first downstream baseband signal onto at least one downstream wireless radio frequency carrier to generate at least one second modulated downstream carrier signal and transmitting said at least one second modulated downstream carrier signal wirelessly. The method further comprises receiving the at least one second modulated downstream carrier signal and demodulating the at least one second modulated downstream carrier signal to produce at least one second downstream baseband signal. The method further comprises transmitting the at least one second downstream baseband signal.

According to another embodiment of a system for upstream communication, the system comprises a linear broadband network having substantially linear and broadband frequency characteristics, a first upstream modulator that modulates at least one upstream baseband signal received from a client device, the at least one upstream baseband signal being modulated onto at least one upstream wireless radio frequency carrier to produce a first upstream modulated carrier signal. The system further comprises an upstream transmitter that wirelessly transmits the at least one first upstream modulated carrier signal, an upstream receiver that receives the at least one first upstream modulated carrier signal, and an upstream demodulator that demodulates the at least one first upstream modulated carrier signal to generate at least one upstream demodulated baseband signal. The system further comprises, a second upstream modulator that modulates the at least one demodulated upstream baseband signal onto at least one upstream linear broadband network radio frequency carrier for transmission onto the linear broadband network.

According to another embodiment of the present invention a system is provided for bi-directional communication that comprises a bi-directional linear broadband network having substantially linear and broadband frequency characteristics, a first upstream modulator that modulates at least one upstream baseband signal received from a client device, the at least one upstream baseband signal being modulated onto at least one upstream wireless radio frequency carrier to produce at least one first upstream modulated carrier signal, and an upstream transmitter that wirelessly transmits the at least one first upstream modulated carrier signal to an upstream receiver. The upstream receiver receives the at least one first upstream modulated carrier signal. The system further comprises an upstream demodulator that demodulates the at least one first upstream modulated carrier signal to generate at least one upstream demodulated baseband signal. The system further comprises a second upstream modulator that modulates the at least one demodulated upstream baseband signal onto at least one upstream linear broadband network radio frequency carrier for transmission onto the linear broadband network. The bi-directional system further comprises a first downstream receiver that receives at least one first downstream modulated carrier signal from the linear broadband network, a first downstream demodulator that demodulates the at least one first downstream modulated carrier signal to produce a first downstream baseband signal, and a downstream modulator that modulates the first downstream baseband signal onto a downstream wireless radio frequency carrier to produce a second downstream modulated carrier signal. The system further comprises a downstream transmitter that transmits the downstream modulated carrier signal, a second downstream receiver that receives the downstream modulated carrier signal, and a second downstream demodulator that demodulates the downstream modulated carrier signal to produce a second downstream baseband signal for delivery to the client device.

In another embodiment according to the teachings of the present invention, an apparatus for coupling to a linear broadband network is provided that comprises an upstream receiver that wirelessly receives at least one first upstream modulated carrier signal, an upstream demodulator that demodulates the at least one upstream modulated carrier signal to produce at least one demodulated upstream baseband signal, an upstream modulator that modulates the at least one demodulated upstream baseband signal onto at least one upstream linear broadband network radio fre-

quency carrier to produce at least one second upstream modulated carrier signal for transmission on the linear broadband network, and an upstream transmitter that transmits the at least one second upstream modulated carrier signal onto the linear broadband network.

In another embodiment according to the teachings of the present invention, an apparatus is provided for communicating with a linear broadband network having substantially linear and broadband frequency characteristics comprises an upstream receiver for receiving a plurality of upstream baseband signals over a wired connection from a plurality of client devices, a multiplexer for multiplexing the plurality of upstream baseband signals onto a multiplexed upstream baseband signal, a first upstream modulator for modulating the at least one multiplexed upstream baseband signal onto at least one upstream wireless radio frequency carrier, and an upstream transmitter for transmitting the at least one upstream wireless radio frequency wireless carrier.

In another embodiment according to the teachings of the present invention, a system is provided for upstream communication over a linear broadband network having substantially linear and broadband frequency characteristics, comprises a subscriber access interface device that receives an upstream baseband signal from a client device, modulates said upstream baseband signal onto at least one upstream wireless radio frequency carrier to produce at least one first upstream modulated carrier signal, and wirelessly transmits the at least one first upstream wireless modulated carrier signal, and a network access interface device, coupled to said linear broadband network, that receives the at least one first upstream modulated carrier signal, demodulates the at least one first upstream modulated carrier signal to produce at least one demodulated upstream baseband signal, modulates the at least one demodulated upstream baseband signal onto at least one upstream linear broadband network radio frequency carrier having a format compatible with the linear broadband network to produce at least one second upstream modulated carrier signal, and transmits the at least one second upstream modulated carrier signal onto the linear broadband network.

In another embodiment according to the teachings of the present invention, a system is provided for upstream communication comprises a linear broadband network having substantially linear and broadband frequency characteristics, a subscriber access interface device that receives an upstream baseband signal from a client device, modulates the upstream baseband signal onto at least one upstream wireless radio frequency carrier to produce at least one first upstream modulated carrier signal, and wirelessly transmits the at least one first upstream wireless modulated carrier signal. The system further comprises a network access interface device, coupled to the linear broadband network, that receives the at least one first upstream modulated carrier signal, demodulates said at least one first upstream modulated carrier signal to produce at least one demodulated upstream baseband signal, modulates said at least one demodulated upstream baseband signal onto at least one upstream linear broadband network radio frequency carrier having a format compatible with the linear broadband network to produce at least one second upstream modulated carrier signal, and transmits the at least one second upstream modulated carrier signal onto the linear broadband network.

In a system employing a method according to the teachings of the present invention, noise that accumulates at the subscriber premises is removed from the upstream signal prior to presentation of the signal to the upstream path of the linear broadband network. Because the upstream signal generated is a digital signal or an analog signal that has been converted to a digital signal, when the carrier is demodulated, the system is able to reconstruct the signal into an image of the transmitted digital signal without the noise, thereby restoring the information integrity of the original signal. The inherent bandwidth limiting function and hysterisis of a digital signal filters out and removes much of the noise, as the signal is prepared for transmission. A baseband signal directly modulates a wireless carrier using modulation techniques that minimize noise interference of the transmitted signal. The reconstruction process further filters out noise that is injected into the system because of the transmission process. Advantageously, this elimination of noise is cumulative and provides for a significantly quieter upstream path composite signal.

Use of a digital baseband signal for the entire distance up to wireless transmission greatly reduces the introduction of noise and permits use of error checking and retransmission, forward error correction, error concealment, or a combination thereof in the link between the subscriber premises and the network access interface device. Similar use of error checking and retransmission, forward error correction, and error concealment may also be used for the link between the network access interface device and the headend. The additional error management step advantageously reduces the number of errors that must be addressed allowing faster data transmission rates and more efficient use of bandwidth as compared to conventional systems.

As pointed out above, the linear broadband network communications infrastructure may comprise the hybrid fiber coaxial ("HFC") network conventionally used for delivery of cable TV services. The HFC network currently uses a wired tap technology. The wired tap technology comprises a drop cable extending from a tap at a curb to equipment located at a subscriber premises. The wireless tap, or network access interface device according to the teachings of the present invention, is compatible with and is able to coexist on the same network as the wired tap. Accordingly, the network access interface device of the present invention provides a smooth and gradual upgrade installation path for communication service providers. Services to existing subscribers need not be disturbed when subscribers are added or upgraded. Each network access interface device supports a plurality of subscribers. Accordingly, the total number of two-way transceivers connected to the linear broadband network is reduced. By concentrating the services supported by a single modem, there is a decrease in the number of noise sources connected to the linear broadband network. The signal-to-noise ratio, therefore, is improved by 10 log the a ratio of the number of network access interface devices over the number of wired modems that a conventional system would require for the same level of service.

BRIEF DESCRIPTION OF THE DRAWINGS

FIG. **1** is a representative view of an embodiment of system according to the teachings of the present invention.

FIG. **2** is a representative view of a network access interface device and various possible embodiments of subscriber access interface devices and client devices employed in a method according to the teachings of the present invention. The possible embodiments shown are not exhaustive. Other embodiments will occur to one of ordinary skill in the art having benefit of the present disclosure.

FIG. **3** is a representative view of an upstream signal flow according to the teachings of the present invention from an initiating client device to a linear broadband network.

FIG. **4** is a representative diagram of data packets at various stages of an upstream data transmission process.

FIG. **5** is a representative view of a downstream signal flow according to the teachings of the present invention from linear broadband network to a destination client device.

FIG. **6** is a representative diagram of data packets at various stages of a downstream data transmission process.

FIG. **7** is a representative block diagram of an embodiment of a direct sequence spread spectrum network access interface device for implementation of a method according to the teachings of the present invention.

FIG. **8** is a representative block diagram of an embodiment of a direct sequence spread spectrum subscriber access interface device for implementation of a method according to the teachings of the present invention.

FIG. **9** is a representative block diagram of an embodiment of a frequency hopping spread spectrum network access interface device for implementation of a method according to the teachings of the present invention.

FIG. **10** is a representative block diagram of an embodiment of a frequency hopping spread spectrum subscriber access interface device for implementation of a method according to the teachings of the present invention.

FIG. **11** is a flow diagram of the polling process of an embodiment according to the teachings of the present invention.

DETAILED DESCRIPTION OF EMBODIMENTS OF THE INVENTION

With specific reference to FIGS. **1** and **2** of the drawings, there is shown a system according to the teachings of the present invention in which a subscriber access interface device **10** ("SAID") communicates bi-directionally with a network access interface device **6** ("NAID") coupled to a linear broadband network **2**. The NAID **6** is an integrated gateway that contains both a Wide Area Network ("WAN") connection and a wireless Local Area Network ("LAN") connection. For purposes of discussion, an example of the WAN is the linear broadband network **2**, such as the existing HFC network, and an example of the LAN is a communication network at a subscriber premises **66**. The WAN connection in the NAID **6** provides all of the functionality of a cable modem. In a preferred embodiment, the cable modem portion of the NAID **6** is DOCSIS compliant and provides DOCSIS functionality including, but not limited to, automatic negotiation, registration, encryption, and automatic assignment of IP addresses. There is a plurality of the NAIDs **6** on the linear broadband network **2**. The SAID **10** communicates with one of the NAIDs **6** and provides the LAN connectivity at the subscriber premises **66** or directly at a client device. In a preferred embodiment, the subscriber access interface device **10** and the network access interface device **6** use half-duplex communications, however, full-duplex communications are also appropriate depending upon a specific application. The network access interface device **6** receives downstream information from a headend **21** and wirelessly relays the downstream information to the appropriate subscriber access interface device **10**. The subscriber access interface device **10** further distributes the downstream information to an appropriate destination client device **71**. Similarly, the subscriber access interface device **10** receives upstream information from an initiating client device **1** and wirelessly relays it to the network access interface device **6**. The network access interface device **6** either distributes the information to another subscriber access interface device **10** supported by the same network access interface device **6** or further relays the upstream information to the headend **21** via the linear broadband network **2**. The destination client device **71** is a uni-directional or bi-directional communication device and may be, for example, a telephone, a video device, a computer, or an audio device. As one of ordinary skill in the art appreciates, therefore, the initiating and destination client devices **1**, **71** may be and are typically the same device. In terms of their logical processing, however, they perform separate functions and are therefore discussed separately. The network access interface device **6** that services the subscriber access interface device **10** is that network access interface device **6** that has the "best" connection to the subscriber access interface device **6** that is being serviced. Upon occasion, however, a transient obstruction will cause a degradation of a primary communications link **102** between the subscriber access interface device **10** and the network access interface device **6**. When the primary communications link **102** degrades to a predetermined threshold, the subscriber access interface device **10** searches for an alternate communications link **65** to establish with an alternate network access interface device **31**.

The subscriber access interface device **10** as disclosed in the present patent application can take many forms, which will be described. Because there are so many possible variations of subscriber access interface device **10** to destination client device **71** and initiating client device **1** to network access interface device **6** embodiments, the specific embodiments described are for illustrative purposes only and do not represent all possible combinations.

The network access interface device **6** as disclosed in the present patent application is for coupling to the existing linear broadband network **2** infrastructure. An example of the linear broadband network **2** is a conventional hybrid fiber coaxial network ("HFC network") currently employed by the cable television industry for servicing its subscribers with downstream cable television. Advantageously, the network access interface device **6** is able to co-exist on the same infrastructure as a conventional wired subscriber tap **67** currently used for conventional signal distribution to a subscriber premises **66**. Other examples of the linear broadband network **2** include a fiber network and a coaxial cable network that are able to reach a number of subscribers. The network access interface device **6**, coupled to the linear broadband network **2**, services up to sixteen subscriber premises **66** and **256** client devices **1**, **71** within an approximately 300 meter radius. As a practical matter, the density of subscriber access interface devices **10** may dictate that the actual radius of coverage be more or less than 300 meters and may vary for each subscriber access interface device **10** in the system. The actual number of subscriber premises **66** and client devices **1**,**71** each network access interface device **6** is able to service depends upon a number of factors such as an addressing design of the network access interface device **6**, a distance of the subscriber premises **66** from the network access interface device **6**, a number of client devices **1**, **71** within the subscriber premises **66**, the bandwidth of wireless channels utilized by the network access interface device **6**, transmission power levels, and other factors that will occur to one of ordinary skill in the art. In one embodiment of the system according to the teachings of the present invention, the subscriber access interface device **10** may be located at the subscriber premises **66**. In this embodiment, the subscriber premises **66** may be a home or a business that requires connectivity to the linear broadband network **2**. The subscriber access interface device **10** can provide a minimum of the same service available using the

conventional wired tap **67**. A cable service provider, therefore, is able to upgrade the capability of all of its subscribers without compromising the basic service to which the subscriber had become accustomed. Additionally, the system according to the teachings of the present invention permits multiple uni-directional and bi-directional client devices **1**,**71** to be connected to the linear broadband network **2** via the subscriber access interface unit **10** and also permits a client device **1**,**71** to establish or maintain connectivity with the linear broadband network **2** while roaming. The term "roaming" is used to describe having connectivity with the communications infrastructure while moving and without requiring physical location within the subscriber premises **66**. Accordingly, a system according to the teachings of the present invention provides the minimum cable TV distribution capability while also providing other wireless communications capability on the same linear broadband network **2**.

With specific reference to FIG. **2** of the drawings, there is shown various possible configurations of client device **1**,**71** to subscriber access interface device **10**. In a first embodiment a plurality of the client devices **1** are connected to the subscriber access interface device **10** via a wired connection. In this embodiment, the subscriber access interface device **10** is a peripheral device and typically has the appearance, in cable TV parlance, of a "set top box". With additional reference to FIG. **3** of the drawings, the subscriber access interface device **10** receives a plurality of upstream baseband signals **3** or a plurality of upstream information signals **11**. The upstream information signals **11** are converted to the upstream baseband signal **3** format either in the initiating client device **1** or in the subscriber access interface device **10**. With additional reference to FIG. **4** of the drawings, the upstream baseband signal **3** format comprises a plurality of upstream data packets **24** having an address header **25**. The address header **25** indicates the destination client device **71** for the upstream data packet **24** in a dotted quad IP format.

In a second embodiment of a subscriber access interface device **10** according to the teachings of the present invention, a plurality of the client devices **1** are connected to the subscriber access interface device **10** via a wireless connection. The client devices **1** modulate the upstream baseband signal **3** onto remote upstream wireless carriers to produce remote upstream modulated carriers **83**. It is preferred that the remote connection between the client devices **1** and the subscriber access interface device **10** in a wireless communication embodiment follow the Home RF or Bluetooth communication protocols, but the IEEE 802.11 protocol is also an option. The remote upstream modulated carrier **83** is demodulated to reproduce the upstream data packets **24**.

In a third embodiment according to the teachings of the present invention, the subscriber access interface device **10** is unitary with the client device **1**. As one of ordinary skill in the art appreciates, the upstream baseband signal **3** is wired directly from the electronics in the client device **1** to the transmission electronics in the subscriber access interface device **10**. The client device **1**, therefore, is free to roam and communicates with whichever one of the network access interface devices **6** is local to it.

Fourth, fifth, and sixth embodiments according to the teachings of the present invention illustrate combinations of the wired and wireless connections between the client devices **1** and the subscriber access interface device **10**. Embodiments five and six illustrate that the client device **1** may be a hub or router type of device with either a wired or a wireless connection. In addition the hub or router type of device may further support and be combined with other client devices **1**.

Embodiments one through six as shown on FIG. **2** of the drawings are intended to be illustrative and not exhaustive. Other combinations will occur to those of ordinary skill in the art and are within the scope of the present invention.

To establish upstream connectivity according to the teachings of the present invention and with reference to FIGS. **3** and **4** of the drawings, the initiating client device **1** generates an upstream information signal **11**. The upstream information signal **11** is converted into an upstream baseband signal **3** having an Internet protocol ("IP") format using a dotted quad addressing protocol in the address header **25** followed by the upstream information data. It is not necessary that the client device **1** directly generate the upstream baseband signal **3**. As represented in FIG. **3** by three alternative paths for the upstream information signal **11** generated by the initiating client device **1**, either the initiating client device **1**, the subscriber access interface device **10**, or a separate formatting device may digitize, convert, and format the upstream information into the upstream baseband signal **3**.

An analog initiating client device **1**, such as a legacy telephone, generates an upstream analog signal **11**, such as a POTS signal. In order to convert the upstream analog signal **11** to the upstream baseband signal **3**, the upstream analog signal **11** is digitized to produce a corresponding upstream digital signal. The upstream digital signal is then encoded and formatted into the upstream baseband signal **3**. Alternatively, the digitizing, encoding, and formatting operations may occur within the subscriber access interface device **10**, in which case the subscriber access interface device **10** receives the upstream analog signal **11** directly. The digitizing, encoding, and formatting operations may also occur in a peripheral device, which outputs the upstream baseband signal **3** for transmission to the subscriber access interface device **10**. The digitizing, encoding, and formatting operations may occur within the initiating client device **1**, in which case, the initiating client device **1** outputs the upstream baseband signal **3** directly to the subscriber access interface device **10**. Other variations for providing the upstream baseband signal **3** to the subscriber access interface device **10** are possible and are within the scope of the present invention.

The connection from the initiating client device **1** to the subscriber access interface device **10** may be a wired connection or a wireless connection. In the case of a wireless connection between the initiating client device **1** and the subscriber access interface device **10**, known communication protocols such as Home RF, Bluetooth, or IEEE 802.11 are appropriate. Specifications of the Home RF and Bluetooth communication protocols are hereby incorporated by reference. Accordingly, prior to further processing, the upstream information signal **11** is converted into the upstream baseband signal **3** having the IP format. The upstream baseband signal **3** comprises a series of upstream data packets **24**. Each upstream data packet **24** comprises a service data unit ("SDU") **48** containing upstream information to be sent to the destination client device **71** with an address header **25** in a Transmission Control Protocol/User Data Protocol ("TCP/UDP") format. The address header **25** contains one or more destination addresses, the type of data in the SDU **48** (i.e. voice, video, or data), and the total number of bytes that make up the SDU **48**. As one of ordinary skill in the art appreciates, the address header **25** contains the information necessary to route the upstream data packet **24** to the appropriate destination client device **71** in the same way connectivity is established on the Internet.

As shown in FIG. **2** of the drawings, the subscriber access interface device **10** is able to accept simultaneous inputs from multiple ones of the client devices **1**. The subscriber access interface device **10** time domain multiplexes the upstream data packets **24**, to produce a multiplexed upstream baseband signal **23**. As part of the multiplexing process, the subscriber access interface device **10** may assign an even priority among all of the upstream data packets **24** or it can perform a prioritization function for each upstream data packet **24**. The prioritization process provides quality of service by controlling a latency of each upstream data packet **24**. As one of ordinary skill in the art will appreciate, the upstream data packets **24** from a voice or a video communications signal must be reliably and consistently delivered in real time, within the appropriate bandwidth, and cannot tolerate lost packet retransmission. The upstream data packets **24** from a data communications signal, however, may be delivered as packet bursts and are able to tolerate lost packet retransmission. Accordingly, a prioritizing process takes a data packet type into account when determining when the upstream data packet **24** is to be launched onto the multiplexed upstream baseband signal **23**.

With specific reference to FIG. **3** of the drawings, a central processing unit ("CPU") **60** in the subscriber access interface device **10** (hereinafter termed a "SAID CPU **60**") performs the prioritization and multiplexing operations. A dedicated multiplexer performing the same functions is also appropriate. The SAID CPU **60** receives a plurality of the upstream data packets **24** and can assign a priority to each upstream data packet **24** in one of two ways.

A first prioritizing method is to assign a priority for each upstream data packet **24** based upon a source port configuration of the subscriber access interface device **10**. A priority of a single packet consists of two parts, a user priority that can be either normal or high, and a maximum latency representing a maximum amount of time a packet may be delayed between sending and receiving. The maximum latency is dynamic and decrements in value as the frame waits in a queue. The priority is determined from a combination of the user priority value and the maximum latency value and is assigned a priority value from 0 to 4. Higher priority packets are transmitted first. For example, if the subscriber access interface device **10** were configured with ten ports according to embodiment **1** of FIG. **2**, a fraction of the ten ports is assigned as a voice port **68**, a fraction is assigned as a video port **69**, and a remaining fraction is assigned as a data port **70**. Based upon the source port configuration, of which the subscriber access interface device **10** has a priori knowledge, the subscriber access interface device **10** generates a high priority and a minimum latency to each one of the voice ports **68** and video ports **69**. Signals from each voice port **68** have the same minimum latency, which may be different than the minimum latency assigned to signals from the video ports **69**. As part of the prioritization process the SAID CPU **60** in the subscriber access interface device **10** accepts a plurality of the upstream data packets **24** from the voice and video ports **68,69** according to their minimum latency and assigns the priority to each upstream data packet **24**. The SAID CPU **60** then interleaves the upstream data packets **24** that are incoming from the data ports **70**, assigns their priority, typically a "normal" priority and a longer minimum latency, and generates a multiplexer header **84** to reflect the assigned priorities. The first prioritizing method is most appropriate for the wired connection between the plurality of client devices **1** and the subscriber access interface device **10** and cannot be used for the wireless connection between the client devices **1** and the subscriber access interface device **10**.

A second prioritizing method is to interpret the address header **25** of each upstream data packet **24**. With specific reference to FIGS. **3** and **4** of the drawings, as part of the address header **25**, each upstream data packet **24** carries an indication of the type of communications signal contained therein. The SAID CPU **60** interprets the address header **25** to determine the type of data contained in the SDU **48**. Based upon the determination, the SAID CPU **60** assigns the appropriate priority and the minimum latency for each upstream data packet **24**. Accordingly, the second prioritizing method requires additional processing by the SAID CPU **60**. Once the appropriate priority is assigned, data packet encapsulation appending the multiplexer header **84** and interleaving remaining data packets **24** occurs as previously described. The second prioritizing method is most appropriate for the embodiments having a wireless connection between at least one of the plurality of client devices **1** and the subscriber access interface device **10**, but may also be used with the wired connection between the client devices **1** and the subscriber access interface device **10**. In the embodiment wherein the client device **1** and the subscriber access interface device **10** are integral with each other, prioritization, if any, occurs using either method. The SAID CPU **60** also calculates a cyclic redundancy check ("CRC") value **86** for the plurality of the upstream data packets **24** accepted by the SAID CPU **60**. The CRC value **86** is used when the packet is received for error checking purposes. The SAID CPU **60** encapsulates the plurality of prioritized upstream data packets **24** and attaches the multiplexer header **84** at the beginning of the prioritized packets and the CRC value **86** at the end of the packet to create a multiplexed upstream baseband packet, a plurality of which comprise the multiplexed upstream baseband signal **23**. The SAID CPU **60** transfers the multiplexed upstream baseband signal **23** to a subscriber access interface device Media Access Control Protocol Controller ("SAID MCU") **85** for further processing. The SAID MCU **85** encapsulates a plurality of the multiplexed upstream baseband packets and generates and appends a Media Access Control ("MAC") header **87** to produce a Payload Data Unit **88** ("PDU"). The SAID MCU **85** processes the encapsulated PDU **88** into upstream transmission fragments **89** suitable for transmission and reception over the IEEE 802.11 wireless channel. The MAC header **87** includes information regarding sequencing of the transmission fragments **89**, the number of bytes in the transmission fragment and a total number of fragments in the transmission for purposes of reassembling the transmission fragments **89** after reception over the wireless channel. The upstream transmission fragments **89** are modulated onto an upstream wireless radio frequency carrier **4** by a first upstream modulator **39** to produce a first upstream modulated carrier signal **5**. The first upstream modulated carrier signal **5** is a wireless communications signal and is wirelessly transmitted by the upstream transmitter **40** for reception by the network access interface device **6**. Appropriate frequencies for the upstream wireless radio frequency carrier **4** may be 915 MHz, 2.4 GHz, or 5.8 GHz depending upon the allocated spectrum and preferably follow a wireless communications protocol that is IEEE 802.11 compliant. The IEEE 802.11 is a wireless networking standard that is specifically incorporated by reference herein. The actual frequencies used are a function of the available spectrum in a particular locality. Alternatively, a HiperLAN2 compliant process is appropriate. HiperLAN2 is also a wireless networking standard that is specifically incorporated by reference herein. The wireless link modulation and demodulation processes can employ a direct sequence spread spectrum

process ("DSSS"), a frequency hopping spread spectrum process ("FSSS"), or a vector modulation process. The vector modulation processes preferably employ a quadrature phase shift keying process, but a bi-phase shift keying process, or any other modulation and demodulation process that is consistent with digital modulation techniques will work.

The first upstream modulated carrier signal **5** is received by an upstream receiver **41** in the network access interface device **6** and is demodulated by an upstream demodulator **42** in the network access interface device **6** to reproduce the data transmission fragments **89** in the network access interface device **6**. A Media Access Control Processor **93** in the network access interface device **6** ("NAID MCU **93**") re-constructs the transmitted encapsulated PDU **88** in the network access interface unit **6** to generate an upstream demodulated baseband signal **7**. The upstream demodulated baseband signal **7** is a reconstructed version of the multiplexed upstream baseband signal **23** from which it is derived. It is not important that the upstream demodulated baseband signal **7** follow a particular format, but an IP format is preferred, and the format must preserve the prioritization, multiplexing, and destination addressing information. The general format for both the multiplexed upstream baseband signal **23** as well as the upstream demodulated baseband signal **7** should be digital and packet based. Due to the digital nature of the modulation and demodulation steps, the reconstruction process does not regenerate out of band noise that is injected into the upstream baseband signal **3** through wiring at the subscriber premises **66**.

The first upstream modulated carrier signal **5** may be filtered either before transmission from the subscriber access interface device **10** or as it is received by the network access interface device **6**. Filtering after reception by the network access interface device **6** is preferred. The inherent bandwidth limiting aspect of digital sampling further band limits the first upstream modulated carrier signal **5** to remove noise products from the wireless transmission process. Accordingly, the upstream demodulated baseband signal **7** recaptures the information integrity of the multiplexed upstream baseband signal **3** and disposes of the out of band noise presented on the upstream baseband signal **3** as it is transmitted from the client device **1** through the subscriber access interface device **10** and to the network access interface device **6**. In certain cases, the out of band noise on the upstream baseband signal **3** gives rise to errors in the signal recovered after the demodulation process. By using appropriate forward error correction, preferably convolution encoding and decoding, the errors in the demodulation process may be identified and corrected to further restore the information integrity of the original upstream baseband signal **3**.

A Processor **90** in the network access interface device **6** (hereinafter "NAID CPU **90**") interprets the address header **25** of each upstream data packet **24** to determine a specified destination address. A look up table stored in memory in the network access interface unit **6** identifies the subscriber access interface unit or units **10** that support the destination address. If the destination address points to one of the subscriber access interface devices **10** that is serviced by the same network access interface device **6**, the upstream data packet **24** having the specified destination address is forwarded to the downstream path and is transmitted to the appropriate destination subscriber access interface device **10** without being forward through the headend **21**. If the destination address **72** matches that of one of the subscriber access interface devices **10** that is supported by the receiving network access interface device **6**, the receiving network access interface device **6** strips the upstream data packet **24** from the upstream demodulated baseband signal **7** and re-packetizes it for transmission on the downstream path to the subscriber access interface device **10** designated by the destination address. Those upstream data packets **24** having destination addresses not found in the local look up table of the network access interface device **6** remain in the upstream demodulated baseband signal **7** for transmission to the headend **21**. In relaying the upstream data packet **24** to the headend **21**, a second upstream modulator **43** uses the upstream demodulated baseband signal **7** to modulate an upstream linear broadband radio frequency carrier **8** to produce a second upstream modulated carrier signal **9**. The second upstream modulated carrier signal **9** is in a format that is compatible with the linear broadband network **2**. For example, the second upstream modulator **43** can be a DOCSIS modem to modulate and transmit the second upstream modulated carrier signal in a DOCSIS format. The second upstream modulator **43** in the network access interface device **6** modulates the upstream linear broadband radio frequency carrier **8** and launches the second upstream modulated carrier signal **9** onto the linear broadband network **2** for transmission to the headend **21** for further distribution to the appropriate subscriber access interface device **10** and the destination device **71**. Because the out of band noise in the upstream baseband signal **3** is removed, the tree and branch configuration present in the linear broadband network **2** does not present the same noise summing problems in the upstream path that are present in the conventional system. Accordingly, a method according to the teachings of the present invention is able to effectively utilize the part of the network spectrum allocated to the upstream path, on the linear broadband network, for example the 5–40 MHz spectrum on an HFC network.

In order to build the local look up table in the network access interface device **10**, the subscriber access interface device **6** and the network access interface device **10** perform a negotiation in which, the subscriber access interface device **6** initiates a request for negotiation. The request occurs over a separate wireless service channel initiated by the subscriber access interface device **10** when a client device configuration changes. A change occurs when a client device is added or removed from a subscriber access interface device **10**. The subscriber access interface device **10** transmits information to the network access interface device **6** concerning a number of client devices supported, the information type (i.e. voice, video, or data) of each supported client device **1,71**, the addresses of each client device **1,71** as well as a requested bandwidth. The network access interface device **6** accepts the information and determines how it can most best and most efficiently support the change to be made and responds to the initiating subscriber access interface device **10** a level of service it will receive. The subscriber access interface device **10** accepts the level of service and establishes communication with the network access interface device **6** thereafter. The network access interface device modifies its local look-up table according to the new information received by the subscriber access interface device **10**. In certain cases, the network access interface device **6** may not be able to fully accommodate the configuration change in which case it either refuses the requested configuration change, accommodates the configuration change, but reduces the level of service for other ones of the client devices in the configuration, or in rare cases, will reduce the level of service for one of the subscriber access interface devices that did not request a configuration modification.

With specific reference to FIG. **7** of the drawings, there is shown an embodiment of a Direct Sequence Spread Spectrum ("DSSS") Network Access Interface Device ("NAID") **702** according to the teachings of the present invention. The DSSS NAID **702** is made up of five major sections: a downstream modem, an upstream modem, an access point interface, a DSSS wireless downstream block, and a DSSS wireless upstream block.

In a specific embodiment as shown in FIG. **7** of the drawings, a 64/256 QAM modulated downstream RF signal having a frequency range of between 54 and 860 MHZ is received by a diplex filter **714** from the linear broadband network (**2** in FIGS. **1** and **2** of the drawings). The downstream RF signal is filtered, amplified, and filtered prior to being twice down-converted in an RF tuner **716**. The RF tuner **716** processes the downstream RF signal into a 36/44 MHz IF signal. A 10-bit downstream analog to digital converter **718** samples the analog IF signal converting it to a digital waveform. A quadrature IF demodulator **720** demodulates the 64/256 QAM digital waveform with recovered clock and carrier timing, filters, and equalizes the data. The result of the demodulation is transmitted to a downstream forward error correction processor **722**, which synchronizes, de-interleaves, decodes using a Reed-Solomon polynomial, and de-randomizes the data. The error corrected and decoded output is transmitted to a downstream processor **724** that performs DOCSIS compliant physical and Media Access Control functions. Specifically, the downstream processor **724** provides concatenation of downstream fragments and provides filtering of up to **256** destination addresses. The downstream processor **724** also provides system timing and synchronization, quality of service prioritization, bandwidth allocation, error detection, error handling, error recovery, and performs negotiation procedures with the headend (**21** in FIG. **1** of the drawings) for registering new NAIDs (**6** in FIGS. **1** and **2** of the drawings). The downstream data is then sent to a system Central Processing Unit ("CPU") **726**. The system CPU **726** provides 56-bit Data Encryption Standard ("DES") key information to a DES decryption processor **728** to perform privacy decryption functions. The Data Encryption Standard is hereby incorporated by reference. The system CPU **726** also provides control of the synthesizer functions for appropriate setting of the mixing and demodulation frequencies. The system CPU **726** also contains network management protocols such as SNMP, DHCP and NAT and Internet Protocol router capability to route data packets to appropriate SAIDs **10** based upon destination addresses. System memory **734** includes a direct memory access ("DMA") controller for handling the high data rate without intervention from the system CPU **726**. The DMA controller manages the transfer of the decrypted data to the system memory **734** via a system data bus **730**. The DMA controller manages the transfer of the data to an IEEE 802.11 Media Access Control ("MAC") protocol controller **732** for processing. As one of ordinary skill in the art appreciates, there is a high data rate to and from the MAC protocol controller **732**. Accordingly, there is a need to buffer data into and out of the MAC protocol controller **732** using a system memory **734**. The system CPU **726** provides information to the MAC protocol controller **732** regarding a destination SAID **10**. This triggers the MAC protocol controller **732** to send a Request to Send ("RTS") signal directly to the destination SAID **10** . When the destination SAID **10** is ready to receive data, it issues a Clear to Send ("CTS") signal. The MAC protocol controller **732** receives the CTS signal. The MAC protocol controller **732** then formats the payload data unit (**92** in FIG. **6** of the drawings) and appends to it a header (**95** in FIG. **6** of the drawings) to generate a downstream data packet (**75** in FIG. **6** of the drawings). The MAC protocol controller **732** transmits the downstream data packet to a digital baseband processor **738**. The digital baseband processor **738** clocks and scrambles the downstream data packet and differentially encodes the downstream data packet before applying a spread spectrum modulation. The digital baseband processor **738** quadrature phase shift key modulates the packet to generate a baseband signal having I and Q components. The digital baseband processor **738** then spreads the I and Q symbols with a pseudo-random number sequence generator and sends it to a digital to analog converter **740** where the baseband signal is converted to an analog waveform. The analog waveform is transmitted to a quadrature IF modulator **742** that provides shaping and filtering and up-converts it into an IF signal. The gain controlled IF signal is further up-converted to the 2.4 to 2.5 GHz band by a transmission mixer **744**. The output signal from the transmission mixer **744** is filtered at **756** and power controlled at **758** to an optimized output level before it is fed into a transmit/receive diversity switch **746**. An optimum power level is application dependent and differs for each network access interface unit in a system. The diversity switch **746** connects the output signal to a transmit antenna **748** for transmission by the NAID **6** and subsequent reception by the SAID **10**. AMAC switch control line **736** controls the position of the diversity switch **746** to connect the transmit antenna **748** for delivery of the request to send signal. The MAC switch control line **736** then switches the position of the diversity switch **746** to connect the receive antenna **750** for reception of the clear to send signal. As described and shown in FIG. **7**, the NAID **6** may comprise separate transmit and receive antennas **748**, **750** respectively with a double pole/double throw diversity switch **746**. Alternatively, the NAID may comprise a single transmit/receive antenna **752** for use with a single pole/double throw diversity switch **754**.

With further reference to FIG. **7** of the drawings, an upstream wireless signal having a frequency in the 2.4 to 2.5 GHz range is received by the receive antenna **750** and filtered with a dielectric filter (not shown). The diversity switch **746** is in a position connecting the receive antenna **750** to wireless receive circuitry in the NAID **6**. A low noise amplifier **760** sets the received noise figure and appropriate signal gains of the received signal. After filtering at **762**, the signal is down-converted in mixer **764** to a 280 MHz IF signal. The IF signal is bandpass filtered at **766** and is transmitted to quadrature demodulator **768**. The quadrature demodulator **768** comprises a limiting amplifier, baseband demodulator, and baseband low pass filters. The resulting I and Q quadrature signals are converted to digital waveforms in the analog to digital converter **770** and transmitted to the digital baseband processor **738**. The digital baseband processor **738** correlates the pseudo-random number spreading to remove it and to recover the differential quadrature phase shift keying data. The digital baseband processor detects, identifies, and locks onto the signal and uncovers the symbol timing phase and frequency. The digital baseband processor **738** uses the symbol timing phase and frequency to initialize a tracking loop for data acquisition. When the digital baseband processor **738** begins successful tracking of the demodulated data, it de-scrambles the direct spread data to prepare the upstream transmission fragments (**89** in FIG. **4** of the drawings) for processing in the IEEE 802.11 MAC protocol controller **732**. The MAC protocol controller **732** provides the concatenation function to recover the upstream

PDU (**88** in FIG. **4** of the drawings). Each encapsulated PDU comprises the MAC header (**87** in FIG. **4**) containing a preamble and a start frame delimiter, the data, and the CRC value (**86** in FIG. **4**). The MAC protocol controller **732** processes and interprets the MAC header and start frame delimiter, determines a mode and length of incoming PDU, and checks the CRC value. If the CRC value indicates that the data is corrupted, the MAC protocol controller **732** discards the current packet and issues a retransmission request. If the CRC value indicates that the data is acceptable, the MAC protocol controller **732** further processes the packet to strip off the MAC header **87** and launches the packet onto the system data bus **730** for delivery to the system CPU **726** via the system memory **734**. The system CPU **726** supplies a 56-bit DES key to a DES encrypt block **772**, which encrypts each packet received. Each encrypted packet is sent to an upstream processor **774** that handles elements of time synchronization with the headend (**21** in FIG. **1**), bandwidth request negotiation, and contention resolution. The packets are then Reed-Solomon encoded for forward error correction in an upstream forward error correction block **776**. The upstream forward error correction block also randomizes, appends a preamble to a beginning of the packet, maps the QPSK/QAM modulation symbols, and pre-equalizes the transmission signal. At this point in the process, an output of the upstream forward error correction block **776** is a digital shaped pulse waveform. The digital waveform is then upconverted to an IF central frequency by a quadrature IF modulator **778** generating an output data burst containing data at a variable symbol rate in either a QPSK or 16-QAM format. A 10-bit digital to analog converter **780** converts the output data burst signal to a 5–65 MHz analog waveform. The analog waveform is filtered at **782** and amplified by an automatic gain controlled power amplifier **784**. The amplified signal is filtered again at **786** before being launched onto the linear broadband network **2** through the diplexer filter **714**. Power is delivered to the NAID via the coaxial connection to the linear broadband network (**2** in FIG. **1** of the drawings). The AC power signal, at for example 60 Hz or 50 Hz, is superimposed onto the communications signal. The diplexer filter **714** separates the low frequency power signal from the higher frequency communications signal. The low frequency power signal is sent to power supply **788** where the AC power is converted to DC using known techniques and then distributed throughout the NAID over power busses **790**.

With specific reference to FIG. **8** of the drawings, there is shown a direct spread spectrum subscriber access interface unit block diagram **802** according to the teachings of the present invention in which an IEEE 802.11 wireless DSSS signal is received by receive antenna **804**. The primary downstream function of the subscriber access interface unit **802** is delivery of the appropriate signal to a designated destination client device **830**(**71** in FIG. **2**). With a diversity switch **806** in a receive position, the received signal is transmitted to a low noise amplifier **808**, which sets the received noise figure and appropriate signal gains of the received signal. After filtering at **810**, the signal is downconverted in mixer **812** to a 280 MHz IF signal. The IF signal is band-pass filtered at **814** and is transmitted to quadrature demodulator **816**. The quadrature demodulator **816** comprises a limiting amplifier, baseband demodulator, and baseband low pass filters. The resulting I and Q quadrature signals are converted to digital waveforms in analog to digital converter **818** and transmitted to the digital baseband processor **820**. The digital baseband processor **820** correlates the pseudo-random number spreading to remove it and to recover the differential quadrature phase shift keying data. The digital baseband processor **820** detects, identifies, and locks onto the signal and uncovers the symbol timing phase and frequency, The digital baseband processor **820** uses the symbol timing phase and frequency to initialize a tracking loop for data acquisition. When the digital baseband processor **820** begins successful tracking of the demodulated data, it de-scrambles the direct spread data to prepare the downstream transmission fragments (**94** in FIG. **6** of the drawings) for launch onto a system data bus **822** and processing in IEEE 802.11 MAC protocol controller **824**. The MAC protocol controller **824** provides the concatenation function to recover the downstream data packets (**75** in FIG. **6** of the drawings). Each packet comprises the MAC header (**87** in FIG. **6**) containing a preamble and a start frame delimiter, the data, and the CRC value (**86** in FIG. **4**). The MAC protocol controller **824** processes and interprets the MAC header (**87** in FIG. **6**) and start frame delimiter, determines a mode and length of the incoming packet, and checks the CRC value (**86** in FIG. **6**). If the CRC value indicates that the data is corrupted, the MAC protocol controller **824** discards the current packet and issues a retransmission request. If the CRC value indicates that the data is acceptable, the MAC protocol controller **824** further processes the packet to strip off the MAC header and launches the packet onto the system data bus **822** for delivery to a system CPU **826** via the system memory **828**. A system interface that comprises the digital baseband processor **820**, the system data bus **822**, the MAC protocol controller **824**, the system memory **828**, and the system CPU **826**, is interrupt driven to support the high data transmission speeds. The system memory **828** comprises a direct memory access controller to handle actual data transfer to and from the system memory **828** without intervention from the system CPU **826** or MAC protocol controller **824**. The MAC protocol controller **824** and the system CPU **826** are notified via hardware interrupt when data is ready for processing and when a memory receive buffer is full. The system CPU **826** receives and interprets the address header (**25** if FIG. **6**) of each data packet and de-multiplexes each packet for transmission to the designated destination client devices **830** (**71** in FIG. **2**).

With further reference to FIG. **8** of the drawings, a primary upstream function of the subscriber access interface unit is gathering, encoding, and multiplexing the signals from a plurality of initiating client devices **832** (**1** in FIG. **2** of the drawings) onto a single signal for wireless transmission to the NAID (**6** in FIG. **1** of the drawings). FIG. **8** of the drawings represents a DSSS embodiment of the SAID in which a plurality of initiating client devices **832** generate upstream signals. Each upstream signal is encoded into an upstream baseband signal (**3** in FIG. **3** of the drawings). The system CPU **826** receives each upstream baseband signal **3**, prioritizes, multiplexes, and generates and appends the address header (**25** in FIG. **4** of the drawings) and the multiplexer header (**84** in FIG. **4** of the drawings) onto each packet before launching onto the system data bus **822** for storage into the system memory **828**. The MAC protocol controller **824** receives the plurality of packets stored in the system memory **828** and encapsulates and then fragments the packet for transmission over the IEEE 802.11 wireless link. The digital baseband processor **820** clocks and scrambles the downstream transmission fragments (**89** in FIG. **4** of the drawings) and differentially encodes the downstream transmission fragments before applying a spread spectrum modulation. The digital baseband processor **820** quadrature phase shift key modulates each fragment to

generate a baseband signal having I and Q components. The digital baseband processor **820** then spreads the I and Q symbols with a pseudo-random number sequence generator and sends it to a digital to analog converter **834** where the baseband signal is converted to an analog waveform. The analog waveform is transmitted to a quadrature IF modulator **836** that provides shaping and filtering and up-converts it into an IF signal. The gain controlled IF signal is further up-converted to the 2.4 to 2.5 GHz band by a transmission mixer **838**. The output signal from the transmission mixer **838** is filtered at **840** and power controlled at **842** to an optimized output level before it is fed into the transmit/receive diversity switch **806**. An optimum power level is application dependent and differs for each subscriber access interface unit in a system. The diversity switch **806** connects the output signal to a transmit antenna **844** for wireless transmission by the NAID and subsequent reception by the SAID. AMAC switch control line **846** controls the position of the diversity switch **806** to connect the transmit antenna **844** for delivery of the request to send signal. The MAC switch control line **846** then switches the position of the diversity switch **806** to connect the receive antenna **804** for reception of the clear to send signal. As described and shown in FIG. **8**, the SAID **6** may comprise separate transmit and receive antennas **844**, **804** respectively with a double pole/double throw diversity switch **806**. Alternatively, the SAID may comprise a single transmit/receive antenna **848** for use with a single pole/double throw diversity switch **850**. The MAC switch control line **846** controls the diversity switch **806**, **850** similarly in both alternatives.

With specific reference to FIG. **9** of the drawings, there is shown a frequency hopping spread spectrum ("FHSS") embodiment of the network access interface device **902** according to the teachings of the present invention in which all elements are the same as described in the DSSS embodiment of the NAID **702** except for the transmission and reception circuitry disposed downstream and upstream, respectively, from a digital baseband processor **904**. Accordingly, for purposes of eliminating duplication, it is the differing portion of the FHSS embodiment that is discussed in this paragraph. In the downstream process, the digital baseband processor **904** convolution encodes the data packets received from a MAC protocol controller **906** via a system data bus **908** into I and Q digital data channels. The digital baseband processor **904** sends the I and Q digital data channels to downstream analog baseband processor **910**. The downstream analog baseband processor **910** filters, differentially encodes, and converts the digital signals to filtered and encoded analog equivalent signals. Accordingly, the data is QPSK modulated and comprises a baseband quadrature signal having I and Q components. The resulting signal is up-converted to an intermediate frequency in IF mixer **912**. An input to the mixer **912** is an output of a frequency hopping generator **916**. The generator **916** comprises two voltage controlled oscillators **918**, **920** ("VCO") in a phase locked loop and a frequency hopping sequence controller **917**. While one VCO **918** is operating as input to the IF mixer **912**, the other VCO **920** is slewing to a new frequency. The MAC protocol controller **906** directs the frequency hopping sequence controller **917** as to the appropriate frequency to generate. Switch **922** toggles between the two VCOs **918**, **920** as the frequencies slew between the various values. The IF signal is then filtered at **924** and up-converted again in mixer **926** to a 2.4 GHz to 2.5 GHz RF signal. The up-converted RF signal is then filtered at **928** to remove the IF image frequency. The filtered and up-converted signal is then amplified in power amplifier **930**. Triple pole, double throw diversity switch **932** is in a transmit position and directs the amplified signal to transmit antenna **934** for wireless transmission to a receiving FHSS SAID, Alternatively, the FHSS NAID embodiment may use a single transmit/receive antenna **936** and a single pole/double throw diversity switch **938**.

With further reference to FIG. **9** of the drawings, the FHSS NAID receives an IEEE 802.11 wireless signal at receive antenna **940**. With the diversity switch **932** or **938** in a receive position, the received signal is filtered at dielectric filter **942**. Low noise amplifier **944** sets the received noise figure and appropriate signal gain. The signal is then down-converted to a 280 MHz IF signal in RF mixer **946** and then filtered at **948** and further down-converted to reconcile the frequency hopping sequence in mixer **950**. The frequency input to the mixer **950** comprises the output of the frequency hopping generator **916** as directed by the MAC protocol controller **906** and controlled by the frequency hopping sequence controller **917**. The resulting IF signal is input into a downstream analog baseband processor **952**. The analog baseband processor **952** down-converts the signal to baseband producing I and Q signals and digitizes the analog signals in a 10-bit analog to digital converter for transmission to the digital baseband processor **904**. The digital baseband processor **904** performs a complex frequency rotation to adjust for any frequency offset and phase error between the transmitter in the SAID and the receiver in the NAID. The digital baseband processor **904** then provides symbol timing and carrier frequency acquisition and tracking. The digital baseband processor **904** also provides automatic gain control on the demodulated baseband signal and a decision threshold comparison of the I and Q channel against an appropriate reference level. The pair of I and Q soft decision signals is then sent to a Viterbi Decoder portion of the digital baseband processor **904**. The digital baseband processor **904** also determines the synchronization boundary of the QPSK symbols, performs the forward error correction decoding process, and recovers the data transmission fragments for interpretation and processing by the MAC protocol controller **906**. Each transmission fragments has a preamble and header containing a start frame delimiter, data, and a CRC value. The Mac protocol controller **906** processes the start frame delimiter and the header, checks the CRC value, and determines the mode and the length of the incoming message. If the CRC value indicates that the data is corrupt, the MAC protocol controller **906** issues a retransmission request for delivery to the SAID. If the CRC value indicates that the data is not corrupt, MAC protocol controller **906** recovers the packet and sends it to a system CPU **956** via the system data bus **908** and system memory **958**.

With specific reference to FIG. **10** of the drawings, there is shown a FHSS embodiment of the SAID according to the teachings of the present invention in which all elements are the same as described in the DSSS embodiment of the SAID **802** except for the transmission and reception circuitry disposed downstream and upstream, respectively, from a digital baseband processor **1002** in FIG. **10** (**820** in FIG. **8**). Accordingly, for purposes of eliminating duplication, it is the different portion of the FHSS embodiment that is discussed in this paragraph. In the upstream process, the digital baseband processor **1002** convolution encodes the data packets received from a MAC protocol controller **1004** via a system data bus **1006** into I and Q digital data channels. The digital baseband processor **1002** sends the I and Q digital data channels to upstream analog baseband processor **1008**. The upstream analog baseband processor **1008** filters, differentially encodes, and converts the digital signals to

filtered and encoded analog equivalent signals. Accordingly, the data is QPSK modulated and comprises a baseband quadrature signal having I and Q components. The resulting signal is up-converted to an intermediate frequency in IF mixer **1010**. An input to the IF mixer **1010** is an output of a frequency hopping generator **1012**. The frequency hopping generator **1012** comprises two voltage controlled oscillators **1014**, **1016** ("VCO") in a phase locked loop and a frequency hopping sequence controller **1018**. While one VCO **1014** is operating as input to the IF mixer **1010**, the other VCO **1016** is slewing to a new frequency. The MAC protocol controller **1004** directs the frequency hopping sequence controller **1018** as to the appropriate frequency to generate. Switch **1020** toggles between the two VCOs **1014**, **1016** as the frequencies slew between the various values. The IF signal is then filtered at **1022** and up-converted again in mixer **1024** to a 2.4 GHz to 2.5 GHz RF signal. The up-converted RF signal is then filtered at **1026** to remove the IF image frequency. The filtered and up-converted signal is then amplified in power amplifier **1028**. Triple pole, double throw diversity switch **1030** is in a transmit position and directs the amplified signal to transmit antenna **1032** for wireless transmission to a receiving FHSS NAID. Alternatively, the FHSS NAID embodiment may use a single transmit/receive antenna **1034** and a single pole/double throw diversity switch **1036** instead of separate transmit and receive antennas **1032** and **1038** respectively and diversity switch **1030**.

With further reference to FIG. **10** of the drawings, for downstream operation, the FHSS SAID receives an IEEE 802.11 wireless signal at the receive antenna **1038**. With the diversity switch **1030** or **1036** in a receive position, the received signal is filtered at dielectric filter **1040**. Low noise amplifier **1042** sets the received noise figure and appropriate signal gain. The signal is then down-converted to a 280 MHz IF signal in RF mixer **1044** and then filtered at **1046** and further down-converted to reconcile the frequency hopping sequence in mixer **1048**. The frequency input to the mixer **1048** comprises the output of the frequency hopping generator **1012** as directed by the MAC protocol controller **1004** and controlled by the frequency hopping sequence controller **1018**. The resulting IF signal is input into a downstream analog baseband processor **1050**. The downstream analog baseband processor **1050** down-converts the signal to baseband, producing I and Q signals, and digitizes the analog signals in a 10-bit analog to digital converter for transmission to the digital baseband processor **1002**. The digital baseband processor **1002** performs a complex frequency rotation to adjust for any frequency offset and phase error between the transmitter in the NAID and the receiver in the SAID. The digital baseband processor **1002** then provides symbol timing and carrier frequency acquisition and tracking. The digital baseband processor **1002** also provides automatic gain control on the demodulated baseband signal and a decision threshold comparison of the I and Q channel against an appropriate reference level. The pair of I and Q soft decision signals is then sent to a Viterbi Decoder portion of the digital baseband processor **1002**. The digital baseband processor **1002** also determines the synchronization boundary of the QPSK symbols, performs the forward error correction decoding process, and recovers the data transmission fragments for interpretation and processing by the MAC protocol controller **1004**. Each transmission fragment has a preamble and header containing a start frame delimiter, data, and a CRC value. The Mac protocol controller **1004** processes the start frame delimiter and the header, checks the CRC value, and determines the mode and the length of the incoming message. If the CRC value indicates that the data is corrupt, the MAC protocol controller **1004** issues a retransmission request for receipt by the NAID. If the CRC value indicates that the data is not corrupt, MAC protocol controller **1004** recovers the packet and sends it to a system CPU **1054** via the system data bus **1006** and system memory **1056**.

With specific reference to FIG. **11** of the drawings, a specific beneficial application that takes advantage of the upstream communication capabilities of a system according to the teachings of the present invention is a polling system, whereby a polling request **1102** is received by the network access interface device **6** to take a measurement for immediate reporting or retrieval at a later time. The polling request **1102** may be generated at the network access interface device **6** upon initiation from the network access interface device **6** itself, another set-top box in the subscriber premises **66**, a downstream client device **1**, the headend **21**, or from a device external to the linear broadband network **2** and contains information specifying the content of the request as well as the destination of a response to the request. Upon the receiving the polling request **1102**, the network access interface device **10** generates a polling signal and transmits it to the subscriber access interface device **10** in step **1104**. The subscriber access interface device **10** responds to the polling signal by generating a response upstream baseband signal **1106**. The response upstream baseband signal contains the data gathered in response to the polling request **1102** as well as an address of an intended destination of the data. A data format of the response upstream baseband signal is the same as that of the upstream baseband signal **3** and is, therefore, processed similarly. The subscriber access interface device **10** modulates and transmits the response upstream baseband signal to the network access interface device **6**. The network access interface device **6** in step **1108** determines whether the data contained in the response upstream baseband signal is to be stored in the network access interface device **6** for later retrieval, whether the response upstream baseband signal is to be forwarded directly to the headend **21**, or whether the data is to be sent to one of the destination client devices **71**. If the data contained in the response upstream baseband signal is to be stored, the network access interface device **6** receives the response upstream baseband signal, converts it to data, and stores the data in memory for later retrieval shown in step **1110**. If the data contained in the response upstream baseband signal is to be transmitted to the headend **21**, the network access interface device **6** receives the response upstream baseband signal, demodulates, re-modulates, and transmits it to the headend **21** along with the upstream data shown in step **1112**. If the data contained in the response upstream baseband signal is to be transmitted to one of the destination client devices **71**, the network access interface device **6** receives the response upstream baseband signal, demodulates the upstream baseband signal and forwards it to the destination client device **71** shown in step **1114**. Stored data may be retrieved at any time upon a request from the headend **21** or any one of the client devices **1**. The polling capability has application in areas of network maintenance and meter reading, for example.

The network access interface device **6** supports a plurality of the subscriber access interface devices **6**. Accordingly, the network access interface device **6** performs an arbitration process whereby the network access interface device **6** controls the timing of the receipt of transmissions from each of the subscriber access interface devices **10** supported by the network access interface device **6**. Preferably, the arbitration function follows the process as defined in the IEEE

802.11 standard, the contents of which are specifically incorporated by reference herein, in which the subscriber access interface device **6** transmits a signal to the network access interface device **10** requesting access to a transmission channel. The network access interface device **10** responds with a channel clear after which the subscriber access interface device **10** transmits for a certain period of time. The transmission is acknowledged with an indication of whether the upstream data transmission fragments **89** were successfully received or not, and the process repeats for other subscriber access interface devices **10**. As one of ordinary skill in the art appreciates, the network access interface device **6** may be built to accept a plurality of the first upstream modulated carrier signals **5** in order to increase upstream bandwidth between the network access interface device **6** and the subscriber access interface device **10**.

Under certain circumstances, it is possible that a transient obstruction can disturb the communications link between the subscriber access interface device **10** and its associated network access interface device **6** or that a network access interface device **6** is utilizing all of its capacity for communications operations. Each subscriber access interface device **10** has a predetermined threshold against which it measures whether an existing communication link is adequate. The predetermined threshold may be a measurement of bit error rate, latency of upstream data packet transmission, signal strength, or a combination thereof. With reference to FIG. **1** of the drawings, In the event that the communications link falls below the predetermined threshold, the subscriber access interface device **10** seeks and establishes an alternate communications link **65** with an alternate network access interface device **31**.

The downstream path does not share the same noise problems with the upstream path. A system according to the teachings of the present invention, however, provides the opportunity to advantageously utilize the same infrastructure for the downstream path. Additionally, the downstream path permits the cable television service providers to offer bi-directional communication services traditionally handled by the telephone companies. With reference to FIGS. **5** and **6** of the drawings, the downstream process comprises the network access interface device **6** accepting at least one first downstream modulated carrier signal **34** from the linear broadband network **2**. A first downstream receiver **54** in the network access interface device **6** receives the first downstream modulated carrier signal **34** and transmits it to a DOCSIS compliant first downstream demodulator **55**. The first downstream demodulator **55** demodulates the first downstream modulated carrier signal **34** to produce a first downstream baseband signal **35** comprising a series of downstream data packets **75**. Each downstream data packet **75** has a physical address header **91**, an address header **25** in an IP dotted quad format, a downstream data payload **92**, and the CRC byte **86**. The NAID CPU **90** interprets the physical address header **91** of each of the downstream data packets **75**. If the physical address points to one or more of the subscriber access interface units **10** supported by the network access interface unit **6**, the NAID CPU **90** uses a downstream look-up table to re-map a physical address contained in the physical address header **91** into a corresponding logical subscriber access interface device address header **95** for further downstream processing. If the physical address does not match, the packet is not further processed. The downstream data packets **75** destined for local subscriber access interface devices **10** are further processed as part of the first downstream baseband signal **35**. The NAID MCU **93** fragments the packets in the first downstream baseband signal **35** to produce downstream transmission fragments **94** and appends the MAC header **87** for purposes of sequencing and reassembly of the downstream transmission fragments **94** as they are received by the subscriber access interface device **10**.

A downstream modulator **56** modulates the first downstream baseband signal **35** onto at least one downstream wireless radio frequency carrier **36** to produce at least one second downstream modulated carrier signal **37**. The network access interface device **6** may also encode each downstream modulated carrier signal **37** with forward error correction encoding prior to transmission. In a preferred embodiment, convolution encoding is used for forward error correction. A downstream transmitter **57** transmits the at least one second downstream modulated carrier signal **37** wirelessly to the subscriber access interface device **10**. The second downstream receiver **58** in the subscriber access interface device **10** receives the second downstream modulated carrier signal **37** and transmits it to a second downstream demodulator **59**. The second downstream demodulator **59** demodulates the at least one second downstream modulated carrier signal **37** to produce at least one second downstream baseband signal **38**. The SAID MCU **85** interprets the downstream MAC header **87** and reassembles the downstream transmission fragments **94** to reproduce the downstream data packet **75**. If forward error correction has been used, the SAID CPU **60** also decodes each downstream data packet baseband signal **38** prior to transmission to the destination client device **71**. The second downstream baseband signal **35** may, but need not, have the same format as the first downstream baseband signal **35**. The information integrity, however, is preserved. It is preferred that the first downstream baseband signal **35** uses an IP format. The second downstream baseband signal **38** is a packetized signal, which is processed by the SAID CPU **60** to interpret a logical subscriber access interface device header **95** of each downstream data packet **75**. The logical subscriber access interface device header **95** contains de-multiplexing information for purposes of providing quality of service to higher priority data such as voice and video. The SAID CPU **60** interprets the header and de-multiplexes the downstream data packets **75** according to their priorities. The address header **25** indicates the IP address of the destination device **71** to which the data is to be forwarded. The SAID CPU **60** interprets the address header and transmits each downstream data packet **75** to the appropriate destination client device **71**.

In the case of a wired subscriber access interface device **10**, the SAID CPU **60** directs each downstream data packet **75** to an appropriate data port according to a hardware configuration, each port having its own unique IP address. In the case of a wireless connection between the subscriber access interface device **10** and the destination client device **71**, the second downstream baseband signal **38** is modulated onto at least one second downstream wireless radio frequency carrier to produce a third downstream modulated carrier signal which is transmitted wirelessly. Each of the destination client devices **71** receives the third downstream modulated carrier signal and demodulates it to a third downstream baseband signal re-producing the information contained in the downstream data packets **75**. Each destination client device **71** interprets the address header **25** of each downstream data packet **75** searching for a single match to the destination address. If the destination address matches the address of the destination client device **71**, the destination client device **71** accepts, decodes, and presents

the downstream data packet **75** containing the matching destination address. The downstream data packets **75** having destination addresses that do not match are not presented by the destination client device **71** and are discarded after interpreting the non-matching destination address. The present invention has been described by way of example. Modifications and variations to the teachings in the present disclosure are possible without departing from the scope of the appended claims.

What is claimed is:

1. A method of wirelessly communicating information from a client device located at a subscriber's premises to a linear broadband network located remotely from said subscriber's premises to eliminate a wired subscriber drop, said linear broadband network having substantially linear and broadband frequency characteristics, said method comprising the steps of:

generating an upstream baseband signal, said upstream baseband signal having a predefined format,

modulating said upstream baseband signal onto at least one upstream wireless radio frequency carrier to generate at least one first upstream modulated carrier signal,

transmitting said at least one first upstream modulated carrier signal wirelessly from said client device, located at said subscriber's premises, to a network interface device, located proximately to sad linear broadband network, thereby eliminating said wired subscriber drop,

receiving said at least one first upstream modulated carrier signal at said network access interface device that is located proximately to and coupled to said linear broadband network,

demodulating said at least one first upstream modulated carrier signal to produce an upstream demodulated baseband signal, and

modulating said upstream demodulated baseband signal onto at least one upstream linear broadband radio frequency carrier to produce at least one second upstream modulated carrier signal having a signal format compatible with said linear broadband network.

2. A method of communicating as recited in claim **1** and further comprising the step of processing said upstream demodulated baseband signal to substantially reconstruct said upstream baseband signal to said predefined format.

3. A method of communicating as recited in claim **1** and further comprising the step of processing said upstream demodulated baseband signal to substantially reconstruct said upstream baseband signal to a format different from said predefined format.

4. A method of communicating as recited in claim **1** wherein the step of processing further comprises the step of correcting errors present in said upstream demodulated baseband signal to restore information integrity of said upstream baseband signal.

5. A method of communicating as recited in claim **1** and further comprising the step of filtering said at least one first upstream modulated carrier signal.

6. A method of communicating as recited in claim **5** wherein said step of filtering occurs prior to the step of transmitting said at least one first upstream modulated carrier signal.

7. A method of communicating as recited in claim **5** wherein said step of filtering occurs after the step of receiving said at least one first upstream modulated carrier signal.

8. A method of communicating as recited in claim **1** wherein said linear broadband network is a hybrid fiber coaxial network.

9. A method of communicating as recited in claim **1** wherein said linear broadband network is a linear fiber network.

10. A method of communicating as recited in claim **1** wherein said linear broadband network is a linear coaxial network.

11. A method of communicating as recited in claim **1** wherein said linear broadband network is a cable TV network.

12. A method of communicating as recited in claim **1**, the step of generating and modulating occurring in said client device.

13. A method of communicating as recited in claim **1**, the client device communicating with a subscriber access interface device, the subscriber access interface device performing the steps of modulating and transmitting.

14. A method of communicating as recited in claim **13**, said client device communicating with said subscriber access device over a wireless connection.

15. A method of communicating as recited in claim **13**, the client device communicating with said subscriber access device over a wired connection.

16. A method of communicating as recited in claim **1** wherein said step of generating said upstream baseband signal further comprises the steps of generating an upstream analog signal, digitizing said upstream analog signal to produce a corresponding upstream digital signal, and converting said upstream digital signal to said upstream baseband signal.

17. A method of communicating as recited in claim **16**, wherein the step of generating said upstream analog signal comprises generating a telephone signal.

18. A method of communicating as recited in claim **17**, wherein the step of generating said telephone signal comprises generating a voice signal.

19. A method of communicating as recited in claim **17**, wherein the step of generating said telephone signal comprises generating a telephonic fax signal.

20. A method of communicating as recited in claim **17**, wherein the step of generating said telephone signal comprises generating a telephonic data modem signal.

21. A method of communicating as recited in claim **16**, wherein the step of generating said analog signal comprises generating a video signal.

22. A method of communicating as recited in claim **16**, wherein the step of generating said analog signal comprises generating an audio signal.

23. A method of communicating as recited in claim **1**, the step of transmitting said at least one first upstream modulated carrier signal wirelessly comprises transmitting said at least one first upstream modulated carrier signal wirelessly from each one of a plurality of subscriber access interface devices.

24. A method of communicating as recited in claim **23**, the step of transmitting said at least one upstream modulated carrier signal wirelessly from each one of said plurality of subscriber access interface devices further comprising the step of arbitrating for access to said network access interface device from said plurality of subscriber access interface devices.

25. A method of communicating as recited in claim **1**, the steps of modulating and demodulating said upstream baseband signal onto said at least one upstream wireless radio frequency carrier using a direct sequence spread spectrum process.

26. A method of communicating as recited in claim **1**, the steps of modulating and demodulating said upstream base-

band signal onto said at least one upstream wireless radio frequency carrier using a frequency hopping spread spectrum process.

27. A method of communicating as recited in claim **1**, the steps of modulating and demodulating said upstream baseband signal onto said at least one upstream wireless radio frequency carrier using a vector modulation process.

28. A method of communicating as recited in claim **27**, the steps of modulating and demodulating said upstream baseband signal onto said at least one upstream wireless radio frequency carrier using a quadrature phase shift keying process.

29. A method of communicating as recited in claim **27**, the steps of modulating and demodulating said upstream baseband signal onto said at least one upstream wireless radio frequency carrier using a bi-phase shift keying process.

30. A method of communicating as recited in claim **1**, the steps of modulating and demodulating said upstream baseband signal onto said at least one upstream wireless radio frequency carrier using an IEEE 802.11 compliant process.

31. A method of communicating as recited in claim **1**, the steps of modulating and demodulating said upstream baseband signal onto said at least one upstream wireless radio frequency carrier using a HiperLAN2 compliant process.

32. A method of communicating as recited in claim **1** and further comprising the steps of:

generating a polling signal at said network access interface device,

receiving said polling signal at a subscriber access interface device,

responding to said polling signal by generating a response upstream baseband signal,

transmitting said response upstream baseband signal, and

receiving said response upstream baseband signal in said network access interface device.

33. A method of communicating as recited in claim **32** and further comprising the step of forwarding said response upstream baseband signal to a headend on said linear broadband network.

34. A method of communicating as recited in claim **32** and further comprising the step of storing said response upstream baseband signal for retrieval of said response upstream baseband signal upon request.

35. A method of communicating as recited in claim **1**, the step of generating an upstream baseband signal further comprising the steps of generating a communication signal in each one of a plurality of said client devices, converting each said communication signal into a respective one of said upstream baseband signals, time division multiplexing each said upstream baseband signal in a subscriber access interface device to produce a multiplexed upstream baseband signal and the step of modulating further comprising the step of modulating said multiplexed baseband signal onto said at least one upstream wireless radio frequency carrier.

36. A method of communicating as recited in claim **35**, wherein the step of converting said communication signal further comprises the step of coupling said upstream baseband signal to said subscriber access interface through a wired connection.

37. A method of communicating as recited in claim **35**, wherein the step of converting said communication signal further comprises the step of coupling said upstream baseband signal to said subscriber access interface device through a wireless connection.

38. A method of communicating as recited in claim **35**, each upstream baseband signal comprising a plurality of upstream data packets, the method further comprising the steps of prioritizing a launch of each upstream data packet onto said multiplexed upstream baseband signal to control latency of each individual upstream data packet.

39. A method of communicating as recited in claim **38** and further comprising the steps of interpreting a header of each upstream data packet, assigning a priority to each upstream data packet, producing an assigned priority for each upstream data packet, and multiplexing each upstream data packet according to said assigned priority.

40. A method of communicating as recited in claim **38** and further comprising the steps of assigning a priority to each upstream data packet based upon a source port configuration, producing an assigned priority for each upstream data packet, and multiplexing each upstream data packet according to said assigned priority.

41. A method of communicating as recited in claim **1** and further comprising the step of:

controlling a timing of the step of receiving said first upstream modulated carrier signal.

42. A method of communicating as recited in claim **1** and further comprising the step of filtering a spectral range of all of said at least one upstream modulated carrier signal.

43. A method of communicating as recited in claim **1** and further comprising the step of establishing a communications link with an alternate network access interface device in the event of a communication link degradation below a predetermined threshold with said network access interface device.

44. A method of bidirectionally and wirelessly communicating bi-directional information between a client device located at a subscriber's premises and a linear broadband network located remotely from said subscriber's premises to eliminate a wired subscriber drop, said linear broadband network having substantially linear and broadband frequency characteristics comprising steps of:

generating an upstream baseband signal, said upstream baseband signal having a predefined format,

modulating said upstream baseband signal onto at least one upstream wireless radio frequency carrier to generate at least one first upstream modulated carrier signal,

transmitting said at least one first upstream modulated carrier signal wirelessly from said client device, located at said subscriber's premises, to a network interface device located proximately to said linear broadband network, hereby eliminating said wired subscriber drop,

receiving said at least one first upstream modulated carrier signal at a network access interface device that is located proximately to and coupled to the linear broadband network,

demodulating said at least one first upstream modulated carrier signal to produce an upstream demodulated baseband signal,

modulating said upstream demodulated baseband signal onto at least one upstream linear broadband radio frequency carrier to produce at least one; second upstream modulated carrier signal having a sign format compatible with the linear broadband network,

receiving at least one downstream linear broadband network radio frequency carrier signal comprising a first downstream modulated carrier signal from the linear broadband network,

demodulating said at least one first downstream modulated carrier signal to produce at lest one first downstream baseband sign having a predefined format,

modulating said at least one first downstream baseband signal onto at least one downstream wireless radio frequency carrier to generate at least one second modulated downstream carrier signal,

transmitting said at least one second modulated downstream carrier signal wirelessly,

receiving said at least one second modulated downstream carrier signal,

demodulating said at least one second modulated downstream carrier signal to produce at least one second downstream baseband signal,

transmitting said at least one second downstream baseband signal.

45. A method of communicating as recited in claim **44** and further comprising the step of processing said upstream demodulated baseband signal to substantially reconstruct said upstream baseband signal to said predefined format.

46. A method of communicating as recited in claim **44** and further comprising the step of processing said upstream demodulated baseband signal to substantially reconstruct said upstream baseband signal to a format different from said predefined format.

47. A method of communicating as recited in claim **44** wherein the step of processing further comprises the step of correcting errors present in said upstream demodulated baseband signal to restore information integrity to correspond with said upstream baseband signal.

48. A method of communicating as recited in claim **44** and further comprising the step of filtering said at least one upstream modulated carrier signal.

49. A method of communicating as recited in claim **48** wherein said step of filtering occurs prior to the step of transmitting said at least one first upstream modulated carrier signal.

50. A method of communicating as recited in claim **48** wherein said step of filtering occurs after the step of receiving said at least one first upstream modulated carrier signal.

51. A method of communicating as recited in claim **44** wherein said linear broadband network is a hybrid fiber coaxial network.

52. A method of communicating as recited in claim **44** wherein said linear broadband network is a linear fiber network.

53. A method of communicating as recited in claim **44** wherein said linear broadband network is a linear coaxial network.

54. A method of communicating as recited in claim **44** wherein said linear broadband network is a cable TV network.

55. A method of communicating as recited in claim **44**, the step of generating and modulating occurring in said client device.

56. A method of communicating as recited in claim **44**, the client device communicating with a subscriber access interface device, the subscriber access interface device performing the steps of modulating and transmitting.

57. A method of communicating as recited in claim **56**, said client device communicating with said subscriber access interface device over a wireless connection.

58. A method of communicating as recited in claim **56**, said client device communicating with said subscriber access interface device over a wired connection.

59. A method of communicating as recited in claim **44** wherein said step of generating said upstream baseband signal further comprises the steps of generating an upstream analog signal, digitizing said upstream analog signal to produce a corresponding upstream digital signal, and converting said upstream digital signal to said upstream baseband signal.

60. A method of communicating as recited in claim **59**, wherein the step of generating said analog signal comprises generating a telephone signal.

61. A method of communicating as recited in claim **60**, wherein the step of generating said telephone signal comprises generating a voice signal.

62. A method of communicating as recited in claim **60**, wherein the step of generating said telephone signal comprises generating a telephonic fax signal.

63. A method of communicating as recited in claim **60**, wherein the step of generating said telephone signal comprises generating a telephonic data modem signal.

64. A method of communicating as recited in claim **59**, wherein the step of generating said analog signal comprises generating a video signal.

65. A method of communicating as recited in claim **59**, wherein the step of generating said analog signal comprises generating an audio signal.

66. A method of communicating as recited in claim **44**, the step of transmitting said at least one first upstream modulated carrier signal wirelessly comprises transmitting said at least one first upstream modulated carrier signal wirelessly from each one of a plurality of subscriber access interface devices.

67. A method of communicating as recited in claim **66**, the step of transmitting said at least one first upstream modulated carrier signal wirelessly from each one of said plurality of subscriber access interface devices further comprising the step of arbitrating for access to said network access interface device from said plurality of subscriber access interface devices.

68. A method of communicating as recited in claim **44**, the steps of modulating and demodulating said upstream baseband signal onto at least one first upstream radio frequency carrier using a direct sequence spread spectrum process.

69. A method of communicating as recited in claim **44**, the steps of modulating and demodulating said upstream baseband signal onto at least one first upstream radio frequency carrier using a frequency hopping spread spectrum process.

70. A method of communicating as recited in claim **44**, the steps of modulating and demodulating said upstream baseband signal onto at least one upstream wireless radio frequency carrier using a vector modulation process.

71. A method of communicating as recited in claim **69**, the steps of modulating and demodulating said upstream baseband signal onto at least one upstream wireless radio frequency carrier using a quadrature phase shift keying process.

72. A method Of communicating as recited in claim **69**, the steps of modulating and demodulating said upstream baseband signal onto at least one upstream wireless radio frequency carrier using a bi-phase shift keying process.

73. A method of communicating as recited in claim **44**, the steps of modulating and demodulating said upstream baseband signal onto at least one upstream wireless radio frequency carrier using an IEEE 802.11 compliant process.

74. A method of communicating as recited in claim **44**, the steps of modulating and demodulating said upstream baseband signal onto at least one upstream wireless radio frequency carrier using a HiperLAN2 compliant process.

75. A method of communicating as recited in claim **44** and further comprising the steps of:

generating a polling signal at said network access interface device,

receiving said polling signal at a subscriber access interface device,

responding to said polling signal by generating a response upstream baseband signal,

transmitting said response upstream baseband signal, and receiving said response upstream baseband signal in said network access interface device.

76. A method of communicating as recited in claim **75** and further comprising the step of forwarding said response upstream baseband signal to a headend on said linear broadband network.

77. A method of communicating as recited in claim **75** and further comprising the step of storing said response upstream baseband signal for retrieval of said response upstream baseband signal upon request.

78. A method of communicating as recited in claim **44**, the step of generating an upstream baseband signal further comprising the steps of generating a communication signal in each one of a plurality of said client devices, converting each said communication signal into respective ones of said upstream baseband signals, time division multiplexing each said respective ones of said upstream baseband signals in a subscriber access interface device to produce a multiplexed upstream baseband signal and the step of modulating further comprising the step of modulating said multiplexed baseband signal onto said at least one first upstream radio frequency carrier.

79. A method of communicating as recited in claim **78**, wherein the step of converting said communication signal further comprises the step of coupling said upstream baseband signal to said subscriber access interface through a wired connection.

80. A method of communicating as recited in claim **78**, wherein the step of converting said communication signal further comprises the step of coupling said upstream baseband signal to said subscriber access interface device through a wireless connection.

81. A method of communicating as recited in claim **78**, each said upstream baseband signal comprising a series of upstream data packets, the method further comprising the steps of prioritizing a launch of each said upstream data packet onto said multiplexed upstream baseband signal to control latency of each said upstream data packet.

82. A method of communicating as recited in claim **81** and further comprising the steps of interpreting a header of each upstream data packet, assigning a priority to each upstream data packet, producing an assigned priority for each upstream data packet, and multiplexing each upstream data packet according to said assigned priority.

83. A method of communicating as recited in claim **81** and further comprising the steps of assigning a priority to each upstream data packet based upon a source port configuration, producing an assigned priority for each upstream data packet, and multiplexing each upstream data packet according to said assigned priority.

84. A method of communicating as recited in claim **44** and further comprising the step of:

controlling a timing of the step of receiving said first upstream modulated carrier signal.

85. A method of communicating as recited in claim **44** and further comprising the step of filtering a spectral range of all of said at least one upstream modulated carrier signal.

86. A method of communicating as recited in claim **44** and further comprising the step of establishing a communications link with an alternate network access interface device in the event of a communication link degradation below a predetermined threshold with said network access interface device.

87. A method of communicating bi-directional information as recited in claim **44** the step of transmitting said second downstream baseband signal further comprising the step of routing said at least one second downstream baseband signal to a plurality of client devices.

88. A method of communicating bi-directional information as recited in claim **44** wherein said step of transmitting said at least one first upstream modulated carrier and said step of transmitting said at least one second downstream modulated carrier uses a full-duplex process.

89. A method of communicating bi-directional information as recited in claim **44** wherein said step of transmitting said at least one first upstream modulated carrier and said step of transmitting said at least one second downstream modulated carrier uses a half-duplex process.

90. A system for wirelessly communicating without a wired subscriber drop between a client device and a linear broadband network having substantially linear and broadband frequency characteristics comprising:

means for generating an upstream baseband signal,

means for modulating said upstream baseband signal to produce at least one first upstream modulated carrier signal,

means for transmitting said at least one first upstream modulated carrier signal wirelessly from said client device located at a subscriber's premises, to a network interface device, located proximately to said linear broadband network, thereby eliminating said wired subscriber drop,

means for receiving said at least one first upstream modulated carrier signal at a network access interface device coupled to said linear broadband network,

means for demodulating said at least one first upstream modulated carrier signal to produce an upstream demodulated baseband signal, and

means for modulating said upstream demodulated baseband signal onto at least one second upstream radio frequency carrier to produce at least one second upstream modulated carrier signal having a signal format compatible with said linear broadband network.

91. A system for upstream wireless communication comprising: a linear broadband network located remotely from a subscriber's premises having substantially linear and broadband frequency characteristics, a first upstream modulator that modulates at least one upstream baseband signal received from a client device located at said subscriber's premises to eliminate a wired subscriber drop, said at least one upstream baseband signal being modulated onto at least one upstream wireless radio frequency carrier to produce a first upstream modulated carrier signal, an upstream transmitter that wirelessly transmits said at least one first upstream modulated carrier signal, an upstream receiver that receives said at least one first upstream modulated carrier signal, an upstream demodulator that demodulates said at least one first upstream modulated carrier signal to generate at least one upstream demodulated baseband signal, a second upstream modulator that modulates said at least one demodulated upstream baseband signal onto at least one upstream linear broadband network radio frequency carrier for transmission onto said linear broadband network.

92. A system for communicating as recited in claim **91** and further comprising a plurality of client devices, each said plurality of client devices generating a one of said at least one upstream baseband signals.

93. A system for communicating as recited in claim **92**, and further comprising a multiplexer that multiplexes said plurality of said at least one upstream baseband signals to produce a multiplexed upstream baseband signal.

94. A system for communicating as recited in claim **93**, said upstream baseband signal comprising a plurality of

upstream data packets, the system further comprising a prioritization device that assigns a priority to each upstream data packet, said priority informing said multiplexer of an appropriate order in which said multiplexer selects each upstream data packet.

95. A system for communicating as recited in claim **91**, wherein said client device is a telephone.

96. A system for communicating as recited in claim **91**, wherein said client device is a video device.

97. A system for communicating as recited in claim **91**, wherein said client device is a computer.

98. A system for communicating as recited in claim **91**, wherein said client device is an audio device.

99. A system for communicating as recited in claim **91** and further comprising an arbitrator that controls an order in which said upstream transmitter transmits said at least one first upstream modulated carrier signal.

100. A system for communicating as recited in claim **91** and further comprising an arbitrator that controls an order in which said receiver receives said at least one first upstream modulated carrier signal.

101. A system for communicating as recited in claim **91**, and further comprising a forward error correction encoder and a forward error correction decoder.

102. A system for communicating as recited in claim **91** wherein said upstream baseband signal is transmitted over a wired connection.

103. A system for communicating as recited in claim **91** wherein said upstream baseband signal is modulated onto a local upstream carrier and transmitted wirelessly.

104. A system for communicating as recited in claim **91**, wherein said first upstream modulator and said upstream transmitter are integral with said client device.

105. A system for communicating as recited in claim **91**, wherein said first upstream modulator and said upstream transmitter comprise a peripheral device to said client device.

106. A system for wireless, bi-directional communication between a client device located at a subscriber's premises and a bi-directional linear broadband network located remotely from said subscriber's premises to eliminate a wired subscriber drop, said linear broadband network having substantially linear and broadband frequency characteristics comprising:

a first upstream modulator that modulates at least one upstream baseband signal received from said client device, said at least one upstream baseband signal being modulated onto at least one upstream wireless radio frequency carrier to produce at least one first upstream modulated carrier signal,

an upstream transmitter, located proximately to said subscriber's premises, that wirelessly transmits said at least one first upstream modulated carrier signal from said subscriber's premises to said bi-directional linear broadband network, thereby eliminating said wired subscriber drop,

an upstream receiver, located proximately to said linear broadband network, and that receives said at least one first upstream modulated carrier signal,

an upstream demodulator that demodulates said at least one first upstream modulated carrier signal to generate at least one upstream demodulated baseband signal,

a second upstream modulator that modulates said at least one demodulated upstream baseband signal onto at least one upstream linear broadband network radio frequency carrier for transmission onto said linear broadband network,

a first downstream receiver that receives at least one first downstream modulated carrier signal from said linear broadband network,

a first downstream demodulator that demodulates said at least one first downstream modulated carrier signal to produce a first downstream baseband signal,

a downstream modulator that modulates said first downstream baseband signal onto a downstream wireless radio frequency carrier to produce a second downstream modulated carrier signal,

a downstream transmitter, located proximately to said linear broadband network, that transmits said downstream modulated carrier signal, thereby eliminating said subscriber drop,

a second downstream receiver, located proximately to said subscriber's premises, that receives said downstream modulated carrier signal,

a second downstream demodulator that demodulates said downstream modulated carrier signal to produce a second downstream baseband signal for delivery to said client device.

107. A system for communicating as recited in claim **106** and further comprising a plurality of client devices, each said plurality of client devices generating one of said at least one upstream baseband signals.

108. A system for communicating as recited in claim **107**, and further comprising a multiplexer that multiplexes said plurality of said at least one upstream baseband signals to produce a multiplexed upstream baseband signal.

109. A system for communicating as recited in claim **106**, wherein said client device is a telephone.

110. A system for communicating as recited in claim **106**, wherein said client device is a video device.

111. A system for communicating as recited in claim **106**, wherein said client device is a computer.

112. A system for communicating as recited in claim **106**, wherein said client device is an audio device.

113. A system for communicating as recited in claim **106** and further comprising an arbitrator that controls an order in which said upstream transmitter transmits said at least one first upstream modulated carrier signal.

114. A system for communicating as recited in claim **106** and further comprising an arbitrator that controls an order in which said upstream receiver receives said at least one upstream modulate carrier signal.

115. A system for communicating as recited in claim **106**, and further comprising a forward error correction encoder and a forward error correction decoder.

116. A system for communicating as recited in claim **108**, said upstream baseband signal comprising a plurality of upstream data packets, the system further comprising a prioritization device that assigns a priority to each upstream data packet, said priority informing said multiplexer of an appropriate order in which said multiplexer selects each upstream data packet.

117. A system for communicating as recited in claim **106** wherein said upstream baseband signal is transmitted over a wired connection.

118. A system for communicating as recited in claim **106** wherein said upstream baseband signal is modulated onto a local upstream carrier and transmitted wirelessly.

119. A system for communicating as recited in claim **106**, wherein said first upstream modulator and said upstream transmitter are integral with said client device.

120. A system for communicating as recited in claim **106**, wherein said first upstream modulator and said upstream transmitter comprise a peripheral device to said client device.

121. An apparatus for wirelessly coupling a subscriber to a remotely located linear broadband network to eliminate a wired subscriber drop, said linear broadband network having substantially linear and broadband frequency characteristics comprising:

an upstream receiver, located proximately to said linear broadband network, that wirelessly receives at least one first upstream modulated carrier signal from said subscriber, thereby eliminating said wired subscriber drop,

an upstream demodulator that demodulates said at least one upstream modulated carrier signal to produce at least one demodulated upstream baseband signal,

an upstream modulator that modulates said at least one demodulated upstream baseband signal onto at least one upstream linear broadband network radio frequency carrier to produce at least one second upstream modulated carrier signal for transmission on the linear broadband network, and

an upstream transmitter that transmits said at least one second upstream modulated carrier signal onto the linear broadband network.

122. An apparatus for coupling as recited in claim **121** and further comprising an arbitrator for controlling a timing of receipt of said at least one upstream radio frequency carrier from a plurality of client devices.

123. An apparatus for coupling as recited in claim **121** and further comprising a polling device for acquiring information from a client device.

124. A system for wireless upstream communication from a subscriber location to a linear broadband network to eliminate a wired subscriber drop between said subscriber location and said linear broadband network comprising:

said linear broadband network having substantially linear and broadband frequency characteristics,

a subscriber access interface device that receives an upstream baseband signal from a client device located at said subscriber location, modulates said upstream baseband signal onto at least one upstream wireless radio frequency carrier to produce at least one first upstream modulated carrier signal, and wirelessly transmits said at least one first upstream wireless modulated carrier signal from said subscriber location to said linear broadband network,

a network access interface device, coupled to said linear broadband network, that receives said at least one first upstream modulated carrier signal, demodulates said at least one first upstream modulated carrier signal to produce at least one demodulated upstream baseband signal, modulates said at least one demodulated upstream baseband signal onto at least one upstream linear broadband network radio frequency carrier having a format compatible with said linear broadband network to produce at least one second upstream modulated carrier signal, and transmits said at least one second upstream modulated carrier signal onto said linear broadband network.

125. A system for upstream communication as recited in claim **124** and further comprising a first client device coupled to said subscriber access interface device, wherein said first client device interfaces to a local area network that is connected to a plurality of second client devices.

126. A system for upstream communication as recited in claim **124** and further comprising an alternate network access interface device wherein said subscriber access interface device communicates with said network access interface device until a communication link with said network access interface device falls below a predetermined threshold and upon falling below said predetermined threshold, said subscriber access interface device establishes an alternate communication link with said alternate network access interface device.

127. A system for upstream communication as recited in claim **124** and further comprising an alternate network access interface device wherein said subscriber access interface device communicates with said network access interface device and said alternate network access interface device according to the existence of an adequate communication link.

128. A system for wireless upstream communication from a subscriber location to a linear broadband network to eliminate a wired subscriber drop between said subscriber location and said linear broadband network comprising:

said linear broadband network having substantially linear and broadband frequency characteristics,

a subscriber access interface device that receives an upstream baseband signal, modulates said upstream baseband signal, and wirelessly transmits said modulated upstream baseband signal to said linear broadband network,

a network access interface device, coupled to said linear broadband network, that receives said modulated upstream baseband signal, demodulates said modulated upstream baseband signal to produce at least one demodulated upstream baseband signal, modulates said at least one demodulated upstream baseband signal onto at least one upstream linear broadband network radio frequency carrier having a format compatible with said linear broadband network to produce at least one second upstream modulated carrier signal, and transmits said at least one second upstream modulated carrier signal onto said linear broadband network.

129. A method of wirelessly communicating information without a wired subscriber drop from a client device to a linear broadband network, said linear broadband network having substantially linear and broadband frequency characteristics comprising: generating an upstream baseband signal, modulating the upstream baseband signal onto an upstream wireless radio frequency carrier to generate a first upstream modulated carrier signal, transmitting said first upstream modulated carrier signal wirelessly from said client device to a network access interface to eliminate said wired subscriber drop, receiving said first upstream modulated carrier signal at said network access interface device, said network access interface coupled to the linear broadband network, demodulating said first upstream modulated carrier signal to produce an upstream demodulated baseband signal, and modulating said upstream demodulated baseband signal onto an upstream linear broadband radio frequency carrier to produce a second upstream modulated carrier signal that is compatible with said linear broadband network.

* * * * *

UNITED STATES PATENT AND TRADEMARK OFFICE

CERTIFICATE OF CORRECTION

PATENT NO. : 6,377,782 B1
APPLICATION NO. : 09/505107
DATED : April 23, 2002
INVENTOR(S) : Donald M. Bishop, George R. J. Green and Archie R. Shyu

It is certified that error appears in the above-identified patent and that said Letters Patent is hereby corrected as shown below:

Col. 30, line 43 Claim 71, cancel the text "claim 69" and enter the text --claim 70--.
Col. 30, line 47 Claim 72, cancel the text "claim 69" and enter the text --claim 70--.

Signed and Sealed this

Twenty-fourth Day of June, 2008

JON W. DUDAS
Director of the United States Patent and Trademark Office